Life Is On | Schneider Electric

Currents and Surge Protective Devices

White Paper

Currents and Surge Protective Devices

Current Terminology and Ratings Defined

Specifications use several current-related terms to describe the capacity of a Surge Protective Device (SPD) to withstand or manage specific types of current. The following narrative defines the terms Surge Current, Short Circuit Current, Nominal Discharge Current, and Fault Current, and explains how they relate to SPDs.

NORMAL SPD OPERATION

Surge protective devices remain passive until a line voltage exceeds the turn on voltage of the SPD's internal components, as shown in Figure 1. When that occurs, SPD components become conductive and shunt excess current away from the line, typically to a grounding conductor, as shown in Figure 2. The remaining Let-Through Voltage passes downstream along the circuit. These transient overvoltage events occur over fractions of a cycle, thus lasting only for microseconds.

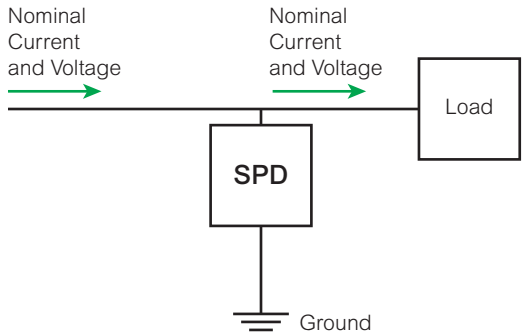

Figure 1: Normal Operation

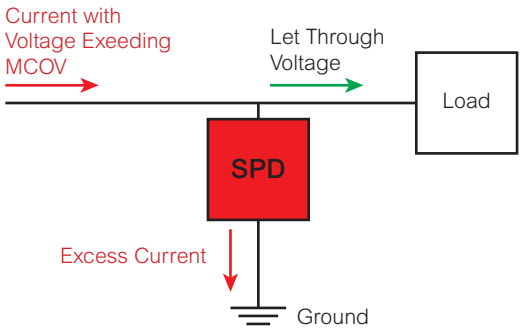

Figure 2: Shunting Operation

CURRENT RATINGS FOR SPDS

The current ratings that typically appear on SPD data sheets are the *Surge Current Rating*, the *Short Circuit Current Rating*, and the *Nominal Current Rating*. Each is explained in the following sections.

Surge Current Rating

When excessive transient overvoltages occur, SPDs must shunt the excess energy and survive the event. The amount of current that an SPD can safely shunt is its Surge Current Rating, which is also known as Surge Capacity. This can be presented as a *per mode* or *per phase* rating and the resulting value is specified in thousands of amperes (kA). Alternatively, this rating may be published as a total surge current rating for the SPD, which may be estimated by summing the current capacity of its surge components, or verified by testing the SPD as a complete assembly. Additional information about per mode and per phase ratings can be found in our white paper entitled *Per Mode and Per Phase Rating Defined*. Figure 3 shows per phase ratings for seven versions of the *ASCO Model 560* SPD.

Performance Specifications			
Surge Capacities	L-N	L-G	N-G
160kA Per Phase (80kA Per Mode)	80kA	80kA	80kA
250kA Per Phase (125kA Per Mode)	125kA	125kA	125kA
320kA Per Phase (160kA Per Mode)	160kA	160kA	160kA
400kA Per Phase (200kA Per Mode)	200kA	200kA	200kA
500kA Per Phase (250kA Per Mode)	250kA	250kA	250kA
750kA Per Phase (375kA Per Mode)	375kA	375kA	375kA
1000kA Per Phase (500kA Per Mode)	500kA	500kA	500kA

Figure 3: The ASCO Model 560 offers Surge Capacities of 160 to 1000 kA Per Phase

Short Circuit Current Rating

As with any electrical load, SPDs require a current-limiting device such as a fuse to protect against internal faults. Faults generally occur when component failure results in a short circuit and produces a large current that flows for an extended amount of time. If uninterrupted, an SPD can fail, sometimes catastrophically. The amount of current available to an SPD component is a function of power system characteristics. The most common SPD failures result from:

- Surge current that exceeds an SPD's surge current capacity
- An incorrect SPD voltage rating
- Sustained overvoltages that cause SPD heating and degradation
- A Floating Neutral, which occurs when the Neutral-Ground connection isn't fully bonded or during the switching of an open transition automatic transfer switch

For these reasons, care should be exercised to ensure that SPDs with appropriate electrical characteristics and ratings are specified for each application. UL 1449 testing evaluates *Short Circuit Current Ratings* (SCCRs) for this purpose. UL 1449 defines an SCCR as *"The suitability of an SPD for use on an AC power circuit that is capable of delivering not more than a declared rms symmetrical current at a declared voltage during a short circuit condition."*[1] SCCRs are stated on data sheets issued by SPD manufacturers.

Nominal Discharge Current Rating

Nominal Discharge Currents, often marked as $I_{nominal}$ or I_n, indicate the amount of current to which sample SPDs have been subject during UL 1449-prescribed tests. $I_{nominal}$ ratings are required to designate the *SPD Type*, which indicates the environments in which an SPD may be installed. For example, to receive a 20kA $i_{nominal}$ rating, the SPD must survive fifteen 8x20 microsecond transients at 20kA as well as other safety tests.

SPD samples that have survived other UL 1449 tests are used for $I_{nominal}$ evaluation. Type 1 SPDs receive the most rigorous testing. Type 1 devices do not need to be installed on a breaker, and can be installed upstream or downstream of a main disconnect or directly on a meter at a building's service entrance. Type 2 devices must be installed on the load side of a breaker and must only pass the $I_{nominal}$ test of at least 3kA to be UL listed. A higher rating indicates greater surge protection. For maximum protection and longevity, ASCO recommends using Type 1 devices with a 20kA I_n rating.

[1] UL 1449, 3.39

EXTERNAL FAULT CURRENTS

The prior narrative defines currents for which an SPD is specifically rated. Each rating relates to elements of the design, construction, and testing of an SPD itself. It is important to differentiate these ratings from the concept of *Fault Currents*, which occur in the power distribution system, external to an SPD.

An example of a fault current is when two or more phase conductors come in contact, creating a short circuit. Known as "phase faults" or "phase shorts", these allow a large amount of current to flow through conductors, circuit breakers, SPDs, and other devices in the electrical system's fault path. Unlike fast-acting surge transients, faults can last a quarter of an AC cycle or longer.

Regardless of how infrequently faults may occur, adequate overcurrent protection must be installed to minimize their risks of equipment damage and personal injury. To isolate an SPD quickly and safely, manufacturers may incorporate fuses directly within the device. Others require external fusing or a circuit breaker to be installed upstream of a protector. With either solution, the following should be completed when systems are designed and SPDs are selected:

- Coordination of SPD electrical ratings with the fault current available at the installation location
- Testing to evaluate how internal or external fuses affect SPD performance
- Review of compliance with Underwriter Laboratories and National Electrical Code® (NEC®) requirements regarding fault currents. (For more information about SPDs and the NEC, see our paper entitled *National Electrical Code Requirements for Surge Protective Devices*.)

Properly coordinated overcurrent protection enables an SPD to handle its published surge current rating without taking itself offline.

SUMMARY

Proper selection of an SPD requires an understanding of its *Surge Current Rating*, *Short Circuit Current Rating*, and *Nominal Discharge Current Rating*. It also requires that the intended application, installation environment, and operating characteristics are also understood. Properly coordinating these elements helps ensure that well-designed surge protection strategies are applied to electrical distribution systems. Reputable SPD manufacturers can provide technical support to assist in selecting suitable devices for specific applications.

Life Is On | Schneider Electric

Schneider Electric
14550 58th Street North
Clearwater, Florida 33760

se.com/us/en/work/support
1-888-778-2733

WP-30020 RevC 02/2021