22-021

Universal Wall Mounting Kit
Mounting Instructions

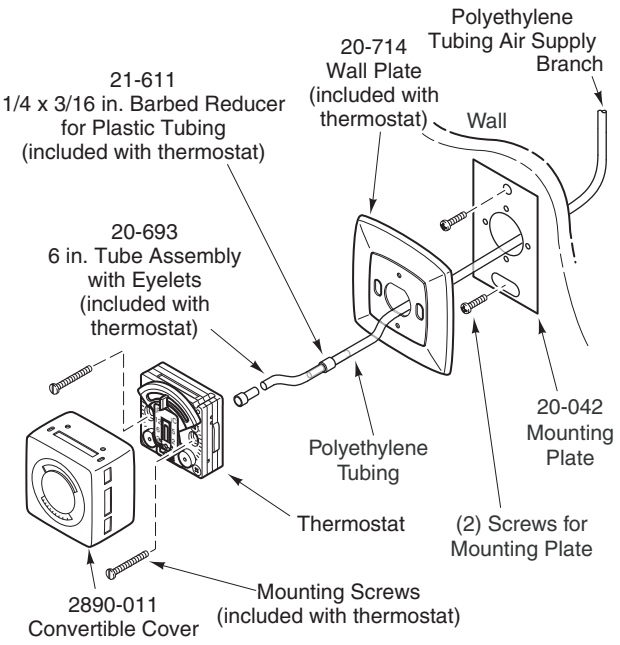

© Copyright 2010 Schneider Electric All Rights Reserved. F-27493-1

22-021

Universal Wall Mounting Kit
Mounting Instructions

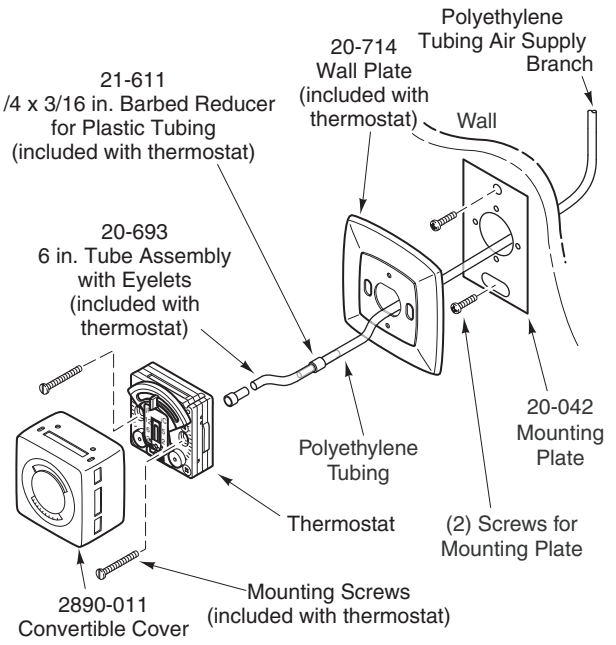

© Copyright 2010 Schneider Electric All Rights Reserved. F-27493-1

22-021

Universal Wall Mounting Kit
Mounting Instructions

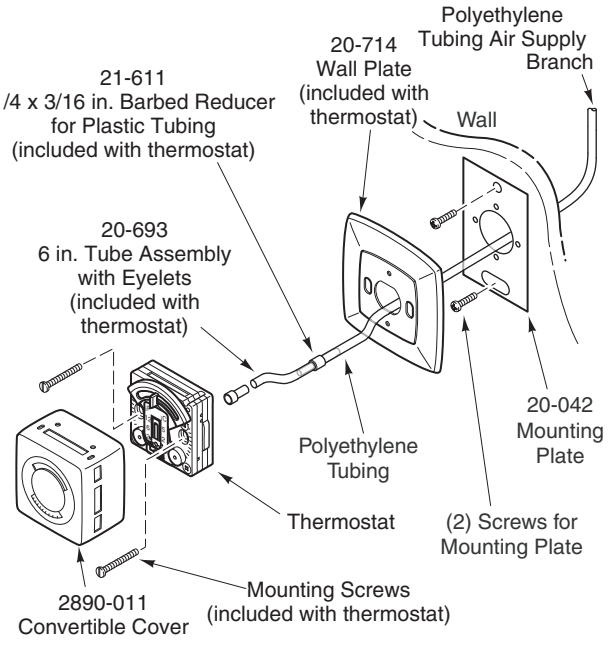

© Copyright 2010 Schneider Electric All Rights Reserved. F-27493-1

22-021

Universal Wall Mounting Kit
Mounting Instructions

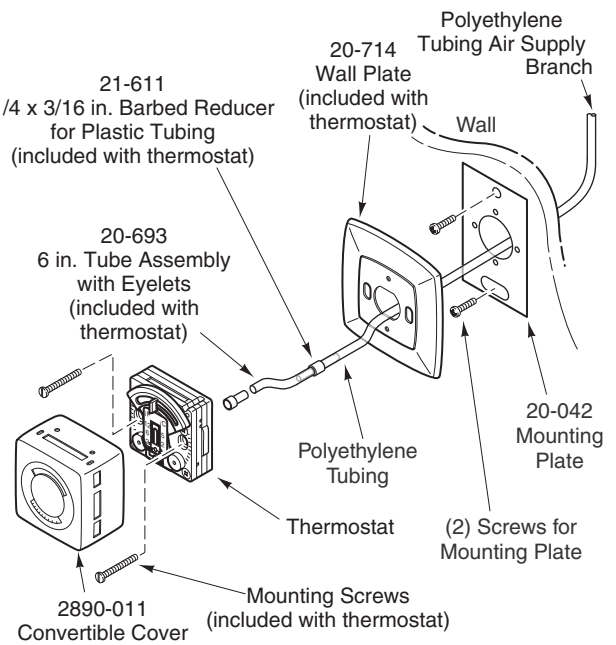

© Copyright 2010 Schneider Electric All Rights Reserved. F-27493-1

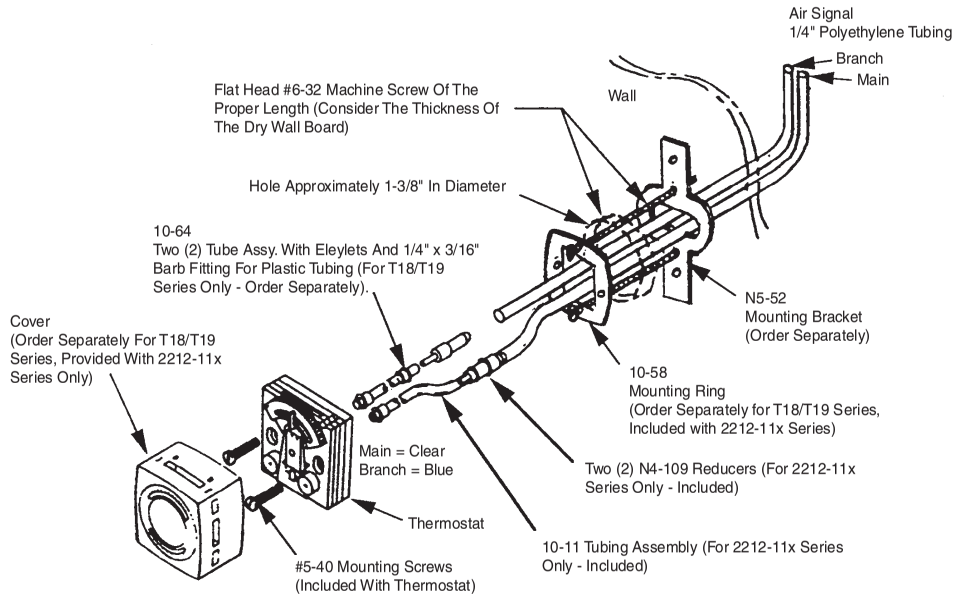
Air Signal
1/4" Polyethylene Tubing
Branch
Main
Wall
Flat Head #6-32 Machine Screw Of The Proper Length (Consider The Thickness Of The Dry Wall Board)
Hole Approximately 1-3/8" In Diameter
10-64
Two (2) Tube Assy. With Eleylets And 1/4" x 3/16" Barb Fitting For Plastic Tubing (For T18/T19 Series Only - Order Separately).
N5-52
Mounting Bracket
(Order Separately)
Cover
(Order Separately For T18/T19 Series, Provided With 2212-11x Series Only)
10-58
Mounting Ring
(Order Separately for T18/T19 Series, Included with 2212-11x Series)
Main = Clear
Branch = Blue
Two (2) N4-109 Reducers (For 2212-11x Series Only - Included)
Thermostat
10-11 Tubing Assembly (For 2212-11x Series Only - Included)
#5-40 Mounting Screws
(Included With Thermostat)

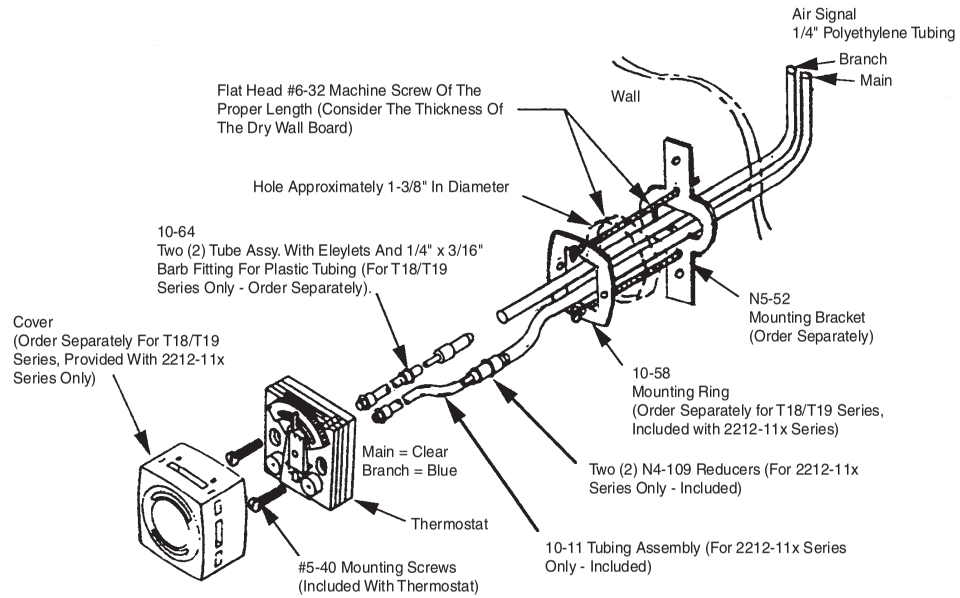
Air Signal
1/4" Polyethylene Tubing
Branch
Main
Wall
Flat Head #6-32 Machine Screw Of The Proper Length (Consider The Thickness Of The Dry Wall Board)
Hole Approximately 1-3/8" In Diameter
10-64
Two (2) Tube Assy. With Eleylets And 1/4" x 3/16" Barb Fitting For Plastic Tubing (For T18/T19 Series Only - Order Separately).
N5-52
Mounting Bracket
(Order Separately)
Cover
(Order Separately For T18/T19 Series, Provided With 2212-11x Series Only)
10-58
Mounting Ring
(Order Separately for T18/T19 Series, Included with 2212-11x Series)
Main = Clear
Branch = Blue
Two (2) N4-109 Reducers (For 2212-11x Series Only - Included)
Thermostat
10-11 Tubing Assembly (For 2212-11x Series Only - Included)
#5-40 Mounting Screws
(Included With Thermostat)

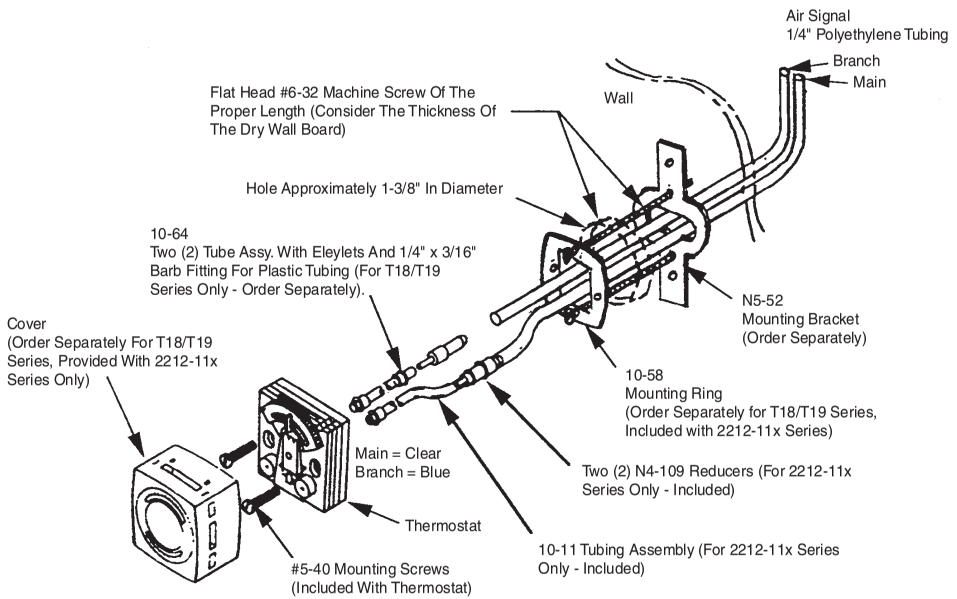
Air Signal
1/4" Polyethylene Tubing
Branch
Main
Wall
Flat Head #6-32 Machine Screw Of The Proper Length (Consider The Thickness Of The Dry Wall Board)
Hole Approximately 1-3/8" In Diameter
10-64
Two (2) Tube Assy. With Eleylets And 1/4" x 3/16" Barb Fitting For Plastic Tubing (For T18/T19 Series Only - Order Separately).
N5-52
Mounting Bracket
(Order Separately)
Cover
(Order Separately For T18/T19 Series, Provided With 2212-11x Series Only)
10-58
Mounting Ring
(Order Separately for T18/T19 Series, Included with 2212-11x Series)
Main = Clear
Branch = Blue
Two (2) N4-109 Reducers (For 2212-11x Series Only - Included)
Thermostat
10-11 Tubing Assembly (For 2212-11x Series Only - Included)
#5-40 Mounting Screws
(Included With Thermostat)

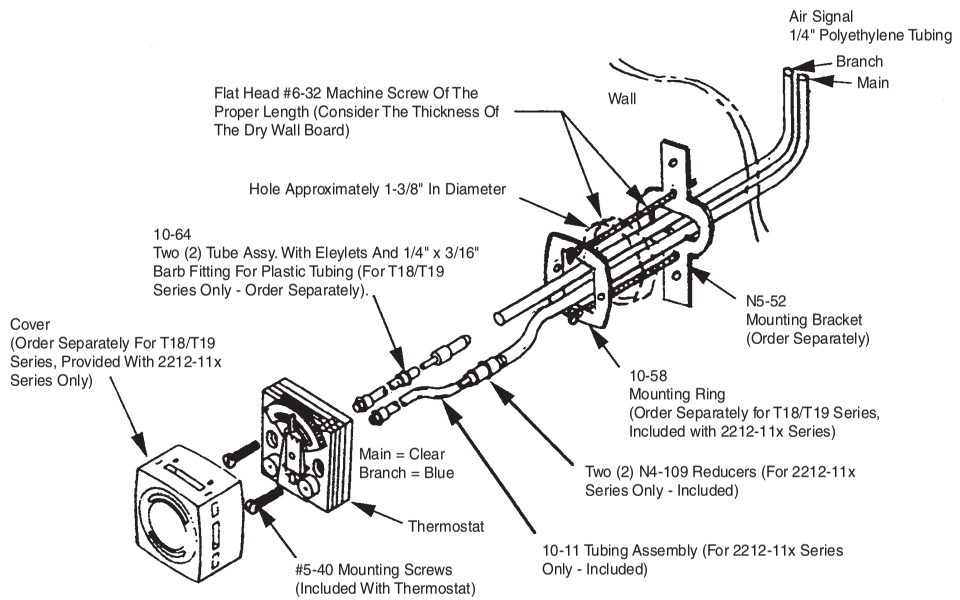
Air Signal
1/4" Polyethylene Tubing
Branch
Main
Wall
Flat Head #6-32 Machine Screw Of The Proper Length (Consider The Thickness Of The Dry Wall Board)
Hole Approximately 1-3/8" In Diameter
10-64
Two (2) Tube Assy. With Eleylets And 1/4" x 3/16" Barb Fitting For Plastic Tubing (For T18/T19 Series Only - Order Separately).
N5-52
Mounting Bracket
(Order Separately)
Cover
(Order Separately For T18/T19 Series, Provided With 2212-11x Series Only)
10-58
Mounting Ring
(Order Separately for T18/T19 Series, Included with 2212-11x Series)
Main = Clear
Branch = Blue
Two (2) N4-109 Reducers (For 2212-11x Series Only - Included)
Thermostat
10-11 Tubing Assembly (For 2212-11x Series Only - Included)
#5-40 Mounting Screws
(Included With Thermostat)