Sepam

Digital Protection Relays
Installation Assistance Guide

06/2010

SEPED309035

www.schneider-electric.com

Table of Contents

Safety Information

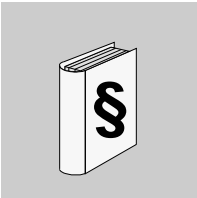

Important Information

NOTICE

Read these instructions carefully, and look at the equipment to become familiar with the device before trying to install, operate, or maintain it. The following special messages may appear throughout this documentation or on the equipment to warn of potential hazards or to call attention to information that clarifies or simplifies a procedure.

The addition of this symbol to a Danger or Warning safety label indicates that an electrical hazard exists, which will result in personal injury if the instructions are not followed.

This is the safety alert symbol. It is used to alert you to potential personal injury hazards. Obey all safety messages that follow this symbol to avoid possible injury or death.

⚠ DANGER

DANGER indicates an imminently hazardous situation which, if not avoided, **will result in** death or serious injury.

⚠ WARNING

WARNING indicates a potentially hazardous situation which, if not avoided, **can result in** death or serious injury.

⚠ CAUTION

CAUTION indicates a potentially hazardous situation which, if not avoided, **can result in** minor or moderate injury.

CAUTION

CAUTION, used without the safety alert symbol, indicates a potentially hazardous situation which, if not avoided, **can result in** equipment damage.

PLEASE NOTE

Electrical equipment should be installed, operated, serviced, and maintained only by qualified personnel. No responsibility is assumed by Schneider Electric for any consequences arising out of the use of this material.

A qualified person is one who has skills and knowledge related to the construction and operation of electrical equipment and the installation, and has received safety training to recognize and avoid the hazards involved.

About the Book

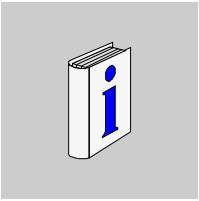

At a Glance

Document Scope

The aim of this guide is to indicate the appropriate installation rules for the Sepam range of protection relays. These installation rules contribute to ensuring correct operation of Sepam relays in medium voltage cubicles.

This guide does not take anything away from the Sepam technical documents. It is aimed at providing further explanations and additional information on the installation rules that already exist for the Sepam range, in particular regarding electromagnetic phenomena.

The guide is intended for everyone in charge of installing the Sepam range of protection relays: OEMs, project managers and customer technical support. The contents of the guide can be used when implementing Sepam in new electrical installations, or when retrofit operations are carried out in existing installations.

The guide mainly deals with the implementation of Sepam relays in medium voltage cubicles. The installation rules mentioned are independent of the type of medium voltage cubicle. The implementation of Sepam in another type of switchgear assembly may involve particular installation rules.

The guide summarizes the various key points of installation, with the intent of focusing on practical use. Numerous illustrations taken from Sepam user manuals are included for that purpose.

Validity Note

The guide mainly concerns the following ranges of Sepam protection relays:
- Sepam series 10
- Sepam series 20
- Sepam series 40
- Sepam series 80
- Sepam 2000

Related Documents

Title of Documentation	Reference Number
Sepam Series 10 - User Manual	SEPED307003EN
Sepam Series 20 - User Manual	PCRED301005EN
Sepam Series 40 - User Manual	PCRED301006EN
Sepam Series 80 - Installation and Operation - User Manual	SEPED303003EN
Sepam Series 20, Series 40, Series 80 - Catalog	SEPED303005EN
Sepam 2000 S25, S26 and S35, S36 - Installation, Use, Commissioning, General Characteristics	3140750EN

You can download these technical publications and other technical information from our website at www.schneider-electric.com.

User Comments

We welcome your comments about this document. You can reach us by e-mail at techcomm@schneider-electric.com.

Generic Installation Rules

1

What's in this Chapter?

This chapter contains the following topics:

Classification of Signals According to Level of Disturbance or Sensitivity

Groups of Signals Defined

ANY electrical cable contained in an installation can be associated with the groups of signals defined in the table below:

Group	Disturbing Capacity	Sensitivity Level	Examples
Group 1	++	–	• Power circuits in general • Welding machine power supply • PEN and PE electrical conductors
Group 2	+	–	Control circuits including inductive loads (relays, contactors, etc.)
Group 3	–	+	Communication circuits
Group 4	–	++	Analog measurement circuits (RTDs, sensors, etc.)

Basic Installation Rules

Introduction

Correct building of electrical installations entails compliance with the following basic rules:

CAUTION
HAZARD OF IMPROPER OPERATION Do not use any other installation rules than those set out in Sepam user manuals or in this guide. **Failure to follow these instructions can result in equipment damage.**

Rule No. 1

Create a low-frequency and high-frequency equipotential bonding network:

- **Throughout the site**
- **Locally, where the equipment is installed**

All exposed metal parts in the installation (metal structures, chassis, mounting plates, cable racks, etc.) are interconnected to create an equipotential bonding network. The interconnections of the various metal parts must be reliable and created by a contact with low impedance at high frequency. The ohmic stability of the impedance must not deviate according to material aging or physical and chemical factors in the environment.

Example of bonding networks:

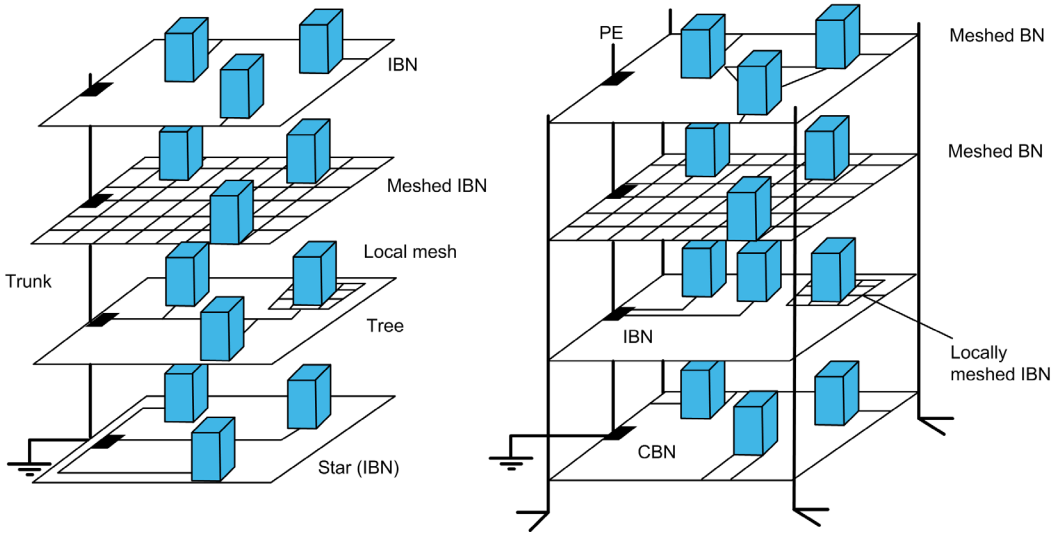

BN: Bonding Network
CBN: Common Bonding Network
IBN: Isolated Bonding Network
PE: Protective Earth conductor

Rule No. 2

Cables in groups 1 and 2 are highly disturbing. It is essential for them to be separated from cables in groups 3 and 4 which are reputed to be sensitive.

These signal groups are never conveyed in the same cable or in the same connector.

Use different cables and strands when the signals are incompatible so as to differentiate between the groups, as shown in the examples below.

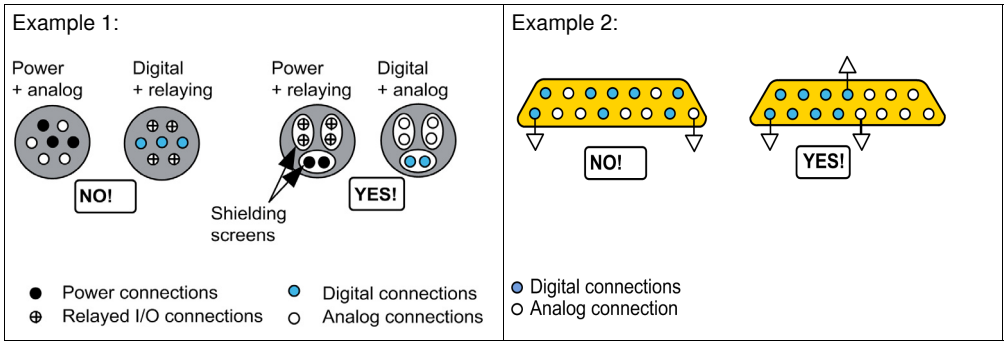

Rule No. 3

Minimize the length of cables running in parallel when they convey different signal groups, in particular between cables belonging to groups 1 and 2 and cables belonging to groups 3 and 4.

Rule No. 4

Increase the distance between cables conveying different signal groups, in particular between cables belonging to groups 1 and 2 and cables belonging to groups 3 and 4.

As a general rule, a distance of 10 cm (4 in.) is sufficient between the cable strands arranged flat on a plate (in common mode and differential mode). If there is enough room, a distance of 30 cm (12 in.) between them is preferable.

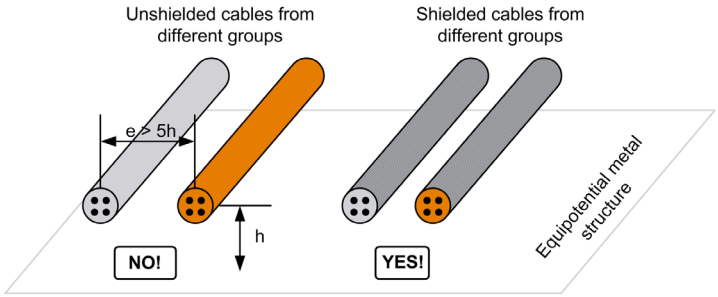

The use of shielded cables allows cables belonging to different signal groups to cohabit.

Rule No. 5

Minimize ground loop areas.

A ground loop results from the area between an active conductor and the ground. Ground loops are often created unintentionally (due to inexperience in cabling, in particular). When the loop is subjected to an electromagnetic field, it becomes the source of induced disturbing voltages that can affect the operation of electronic equipment.

Rule No. 6

In the same electrical connection, outgoing and incoming conductors are always run together.

There should not be any loops between active conductors contained in the same connection. Twisted pair connections allow the outgoing and incoming conductors to be in close proximity all along the connection. Outgoing and incoming wires must always remain adjacent.

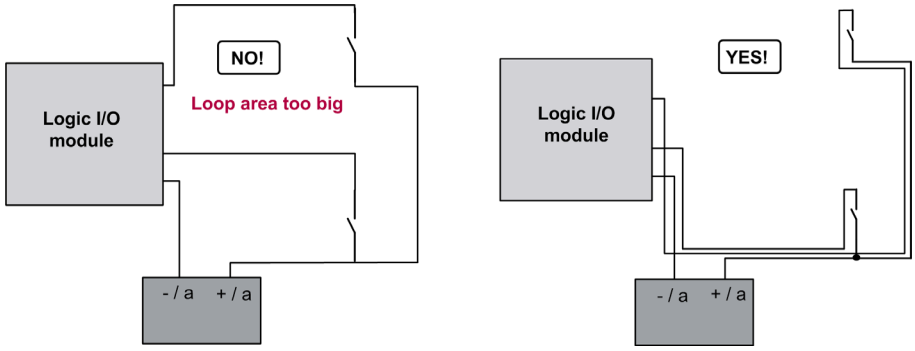

Rule No. 7

Shielded cables are grounded at both ends, provided that in all cases the installation has an equipotential bonding network.

- Connection of any cable shielding to ground by an electrical conductor (commonly referred to as "pigtail" connection) is prohibited.
- Shielded cables are connected to ground by circular contact with the shielding (360°). Jumpers or metal clamps of the appropriate size for the shielded cable diameter are used. Tightening these clamps should create effective contact between the cable shielding and the ground (bonding strap or cable screen). However, the cables should not be tightened enough to damage them (risk of crushing conductors and creating insulation faults).

⚠ DANGER

HAZARD OF ELECTRIC SHOCK, ELECTRIC ARC OR BURNS

To link two points located in the same equipotential bonding zone, use one of the following methods:

- Fiber optic link
- Connection with a galvanic insulator
- Shielded cable:
  - Connected to ground at both ends
  - Equipped with a Parallel Earthing Conductor (called PEC), with a cross-section sized according to the potential short-circuit current in that part of the installation

Failure to follow these instructions will result in death or serious injury.

If the shielded cable connects devices not located in the same equipotential bonding zone, strong current may pass through the cable shielding if there is a ground fault in the installation. In this case, the shielding potential reaches a level that is dangerous for people working on the installation. In addition, the current conveyed in the shielding is liable to damage the cable.

Rule No. 8

Any free conductors in cables, reserved for future use, are grounded at both ends.

This rule is applicable in most cases, but it is not advisable in the particular case of cables that include low-level analog signals sensitive to 50 Hz (risk of "humming").

Rule No. 9

Make sure that cables belonging to different signal groups cross at right angles, in particular that cables belonging to signal groups 1 and 2 cross over cables belonging to signal groups 3 and 4 at right angles.

Strands belonging to different groups must cross at right angles to avoid cross-coupling.

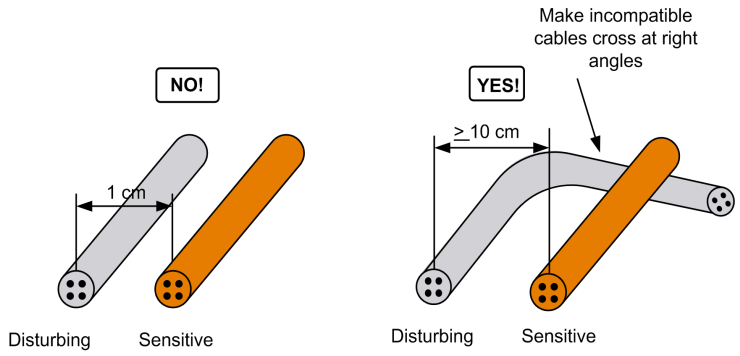

Medium Voltage Cubicle Prerequisites

2

What's in this Chapter?

This chapter contains the following topics:

Equipotential Bonding

Equipotential Bonding of the Installation

Equipotential bonding of an electrical installation aims to achieve the following objectives:

- Ensure the safety of people and equipment. The various metal components in the installation are interconnected and connected to the protective earth.
- Limit the appearance of differences in potential between exposed conductive parts of installations. A difference in potential between exposed conductive parts, especially with high frequencies, has an adverse effect on the operation of electronic equipment.
- Benefit from the natural effects of shielding provided by metal structures. Many metal structures are available in installations. They are close to the installation's electrical cables and their role is to limit the area of common mode loops. The use of the installation's metal structures does not entail any additional cost.

Equipotential Bonding of Metal Enclosures

We will focus in this chapter on the equipotential bonding of metal enclosures.

Medium voltage (MV) cubicles, designed to hold a Sepam protection relay, generally comprise two separate compartments, the MV compartment and the low voltage (LV) compartment:

- The MV compartment houses the actual medium voltage switching device (generally a circuit breaker or contactor) and the associated medium voltage components (current transformers, voltage transformers, etc.).
- The LV compartment contains all the low voltage components, including Sepam and its accessories.

Equipotential Bonding of the MV Cubicle

MV cubicles consist of a metal enclosure, which should have high, well-controlled overall equipotential bonding. Electrical contact between the various metal panels should be, if possible, via contact surfaces that have no paint, varnish or any insulating material on them. If this is not the case, the use of spring washers is strongly recommended, to penetrate the coat of paint on the MV compartment and ensure effective electrical contact.

MV cubicles should be equipped with a main earthing terminal, comprising a bare copper bar with a rectangular cross-section. This main earthing terminal is used to connect the installation's protective earth (PE) cable. It is also used as the reference potential for the MV current transformers (CTs) or MV voltage transformers (VTs).

Equipotential Bonding of the LV Compartment

The LV compartment consists of a metal receptacle, generally located above or beside the MV compartment. The purpose of the physical separation between the MV and LV compartments is to partition the LV compartment. This separation is essential to minimize the propagation of disturbances caused by medium voltage switchgear operations toward the LV compartment. Such disturbances are mainly high-frequency radiated electromagnetic interference. Equipotential bonding serves a true purpose in the LV compartment.

Equipotential Bonding Between the MV and LV Compartments

Equipotential bonding must also be present between the MV and LV compartment enclosures.

The doors of the MV and LV compartments contribute to reducing electromagnetic interference in the compartments (cubicle shielding attenuation). The presence of door hinges alone does not provide equipotential bonding between the door and the compartment. The hinges are generally insufficient to ensure people's safety in the event of ground faults occurring on equipment housed in one of the compartments.

The doors of MV and LV compartments should therefore be connected to the metal structure at two points, preferably at the top and bottom of the door. Two tinned copper straps (or two electrical conductors that are as short as possible) should be used to interconnect the door and the compartment for this purpose.

Since the compartment doors contribute to the EMC performance of the compartments, the doors must be kept closed during operating phases. Openings and vents in the metal door of the LV compartment should be avoided when possible or kept to a minimum.

A metal compartment, designed to house the MV power cables, can also be added to the MV cubicle. The concept of equipotential bonding applies to this cable compartment as well.

Equipment in the Low Voltage Compartment

Reference for Support Frames in the LV Compartment

LV compartments are generally equipped with DIN rails or metal grids, designed to support Sepam accessories or optional modules. In order to achieve optimal equipotential bonding, electrical continuity must be ensured between the DIN rails or metal grids and the LV compartment. In the specific case of DIN rails, at least one reliable contact point must be provided at each end of the DIN rail.

Availability of an Earthing Terminal in the LV Compartment

The LV compartment can also be equipped with an earthing terminal. The electrical continuity between this earthing terminal and the compartment's metal enclosure must be properly implemented and the electrical resistance must be less than or equal to 10 mΩ at all points.

The main purpose of having an earthing terminal in the LV compartment, close to Sepam in particular, is that it can be used as an effective reference for the cable shielding:

- Analog signal cables connected to the MV core balance CT
- Communication network cables, etc.

In these conditions, the following operations can be carried out:

- Connect the shielded cables to ground from the point where they enter the LV compartment
- Connect the shielded cables to ground by a circular (360°) contact using a conductive metal clamp

LV Compartment Protection and Filtering Devices

It should be possible to include protection and filtering devices in the LV compartment, in particular on the electronic equipment supply conductors. The use of such devices may be necessary in highly disturbed electromagnetic environments.

These protection and filtering devices include the following components:

- Isolation transformer
- Surge suppressor
- EMC filter

Equipment in the Medium Voltage Cubicle

MV Cubicle Maintenance

Minimum maintenance of the MV cubicle is recommended to check the equipotential bonding. The maintenance operation may be limited to a visual inspection (once a year, for example). It consists of checking that the various metal components of the cubicle are interconnected and tightened and that there is no corrosion (in particular in the presence of humidity or chemical factors that encourage oxidation).

This maintenance operation is also an opportunity to check the tightening of the electrical conductors connected to the various equipment items, in both the MV and LV compartments. It is especially advisable in environments with major mechanical vibration stress (e.g. command and control of a high-power asynchronous motor located near the MV cubicle).

During the maintenance operation, any surge suppressors present in the electrical installation (particularly any located in the LV compartment) should be checked. This operation may be limited to a visual inspection of the surge suppressor operating indicator, for example.

MV Current Transformers (1 A or 5 A CTs)

To avoid differences in the measurements supplied by the various MV current transformers, in particular in the presence of transient electrical phenomena, each current transformer should be earthed in the same way. The secondary circuits of the MV current transformers are connected to the cubicle's main earthing terminal by means of a copper bar with a rectangular cross-section that is as short as possible.

The two electrical conductors connected to the MV current transformer (CT) secondary circuits are run along the metal structures of the cubicle, then along the LV compartment. Running them along the metal structures reduces ground loops. These conductors are held in the same strand, and may be twisted, to avoid the creation of cabling loops.

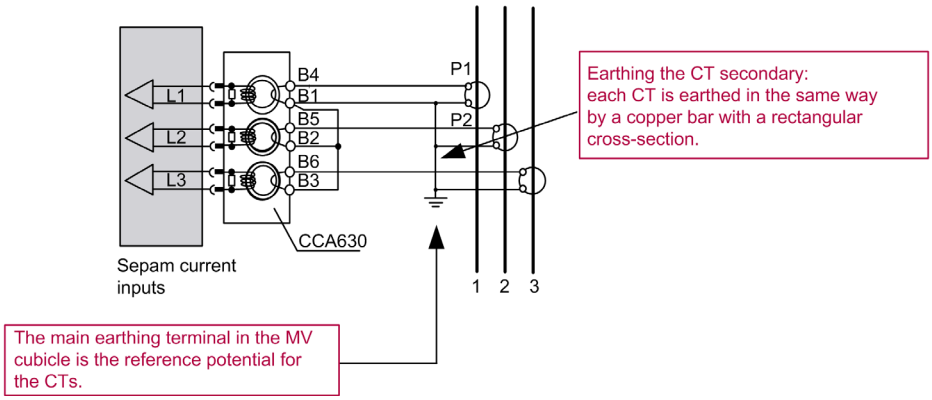

MV Voltage Transformers (VTs)

To avoid differences in the measurements supplied by the various MV voltage transformers (VTs), in particular in the presence of transient electrical phenomena, each voltage transformer should be earthed in the same way. The secondary circuits of the MV voltage transformers are connected to the cubicle's main earthing terminal by means of a copper bar with a rectangular cross-section that is as short as possible.

The electrical conductors connected to the MV voltage transformer secondary circuits are run first along the metal structures of the cubicle, then along those of the LV compartment. Holding the conductors on the metal structures reduces ground loops. These conductors are held in the same strand, and may be twisted, to avoid the creation of cabling loops.

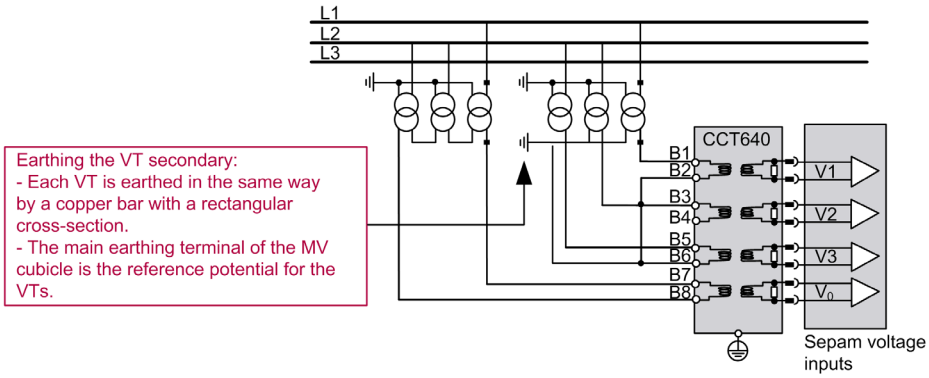

Specific Installation Rules for Sepam and its Accessories

3

What's in this Chapter?

This chapter contains the following sections:

3.1 Sepam Power Supply, Grounding and Electrical Connections

What's in this Section?

This section contains the following topics:

Introduction

Type of Electrical Connections to Sepam

All protection relays in the Sepam range use similar electrical connections.

Each of the electrical connections made to Sepam is comparable with one of the following signal groups:
- Group 1: supply conductors
- Group 2: logic input and output circuits
- Group 3: communication circuits
- Group 4: analog input and output circuits

The table below indicates the different signal groups used by Sepam:

Type of Connection to Sepam	Abbreviations	Related Signal Group
Sepam AC supply	–	**Group 1** Supply conductors
Sepam DC supply	–	
Logic inputs	I1 to Ixxx	**Group 2** Logic input and output circuits
Logic outputs	O1 to Oxxx	
Modbus or Ethernet link	–	**Group 3** Communication circuits
Inter-module link	–	
PC link on front of the Sepam	–	
Phase current inputs	I1, I2, I3 I'1, I'2, I'3	**Group 4** Analog input and output circuits
Residual current input	I0 I'0	
Phase-to-phase voltage inputs	U21, U32, U13 U'21, U'32, U'13	
Phase-to-neutral voltage inputs	V1, V2, V3 V'1, V'2, V'3	
Residual voltage input	V0 V'0	
Temperature inputs	T1 to Tx	
Analog outputs	–	

Management of Sepam Cabling

Sepam is an electronic protection relay that has a high level of immunity, particularly to electromagnetic phenomena.

Sepam's level of immunity will however be made even higher if the Sepam cabling conditions are correct. It is therefore advisable for cabling to be rigorously managed.

To facilitate management of Sepam cabling at the time of installation, it is advisable to first identify the different groups of signals *(see page 25)*.

Each group of signals is protected by a cable sheath so that all the conductors in the same connection can be close to each other.

To facilitate interventions and upgrades to the cabling of a Sepam and its equipment, it is advisable during installation to:
- Group together and identify cables belonging to compatible signal groups, using a plastic cable marker of a specific color for each group. This marking makes it easier to identify the different types of cabling *(see page 9)*.
- Separate the internal cabling from the cabling outside the MV cubicle to avoid disturbance from the external cabling being conveyed along the internal cabling, in particular cabling connected to Sepam. In fact, the cabling outside the MV cubicle may be a source of electromagnetic interference in the installation which may then spread throughout the MV cubicle. A variable speed drive located in the vicinity of the installation may for example be a source of electromagnetic interference.

CAUTION
HAZARD OF IMPROPER OPERATION Do not pass cables in front of a Sepam. **Failure to follow these instructions can result in equipment damage.**

The electromagnetic field emitted by cables passing in front of a Sepam is likely to disturb its operation.

Connecting a Sepam and its Accessories to Ground

Equipotential Bonding Principle for a Sepam

Equipotential bonding of the Sepam protection relay is essential since it contributes substantially to correct operation. In fact, whether a Sepam's electrical characteristics are achieved, particularly the level of immunity to electromagnetic phenomena, depends on this equipotential bonding. Whenever equipotential bonding is essential for correct Sepam operation, the term "functional earth" is frequently found.

Equipotential bonding of a Sepam calls for a few basic precautions. Generally speaking, the impedance of the Sepam bonding connection should be as low as possible. Therefore, the bonding connection should always be as short as possible.

Sepam Bonding Conductor

The equipotential bonding of Sepam differs according to the Sepam model.

Sepam Model	How to Establish Sepam Equipotential Bonding
Sepam series 10	Connect an electrical conductor between the Sepam "earth" terminal and the earthing terminal in the LV compartment: ● Length ≤ 500 mm (20 in.) ● Cross-section 6 mm² (AWG 10)
Sepam series 20	Connect an electrical conductor between Sepam terminal 17 and the LV compartment: ● Length ≤ 200 mm (8 in.) ● Cross-section 2.5 mm² (AWG 12).
Sepam series 40	Connect an electrical conductor between Sepam terminal 17 and the LV compartment: ● Length ≤ 200 mm (8 in.) ● Cross-section 2.5 mm² (AWG 12)
Sepam series 80	Connect a tinned copper strap between the Sepam functional earthing terminal and the LV compartment: ● Length ≤ 300 mm (12 in.) ● Cross-section ≥ 9 mm² (AWG 6)
Sepam 2000	Connect an electrical conductor or a tinned copper strap between the Sepam ground terminal and the LV compartment: ● Length ≤ 200 mm (8 in.) ● Cross-section 6 mm² (AWG 10) **For Sepam 2000, the Sepam mounting clamps do not provide controlled equipotential bonding for the Sepam. These mounting clamps are usually fixed to the compartment door at points that are painted.**

Sepam Equipotential Bonding Recommendations

To facilitate equipotential bonding, Sepam should be installed at close as possible to the LV compartment earthing terminal or to one of the metal uprights of the LV compartment, as shown in the diagram below.

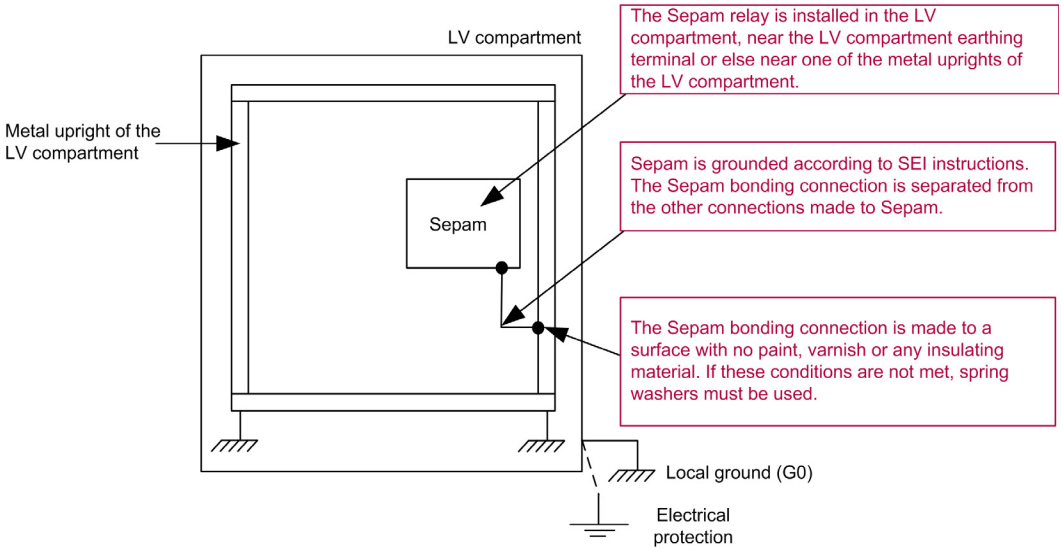

The bonding conductor or strap, between the Sepam relay and the LV compartment, should if possible be connected to contact surfaces with no paint, varnish or any insulating material. If this is not the case (due to risks of corrosion, for example), spring washers must be used to penetrate the coat of paint on the LV compartment and create effective electrical contact between the bonding conductor and the LV compartment.

The tightening torque of the Sepam bonding conductor or strap is sufficiently high to avoid all unwanted electrical contact over time or any loosening of the connection (especially in the event of frequent vibrations). A tightening torque may be recommended.

The Sepam bonding conductor or strap is the source of high-frequency disturbance currents. These currents result from the presence of various electrical transient currents in the installation. Such transients may be caused by the following:

- Electrical switchgear operation on the MV or LV network
- Lightning shocks

Depending on the amplitude and rise time of the transients, these currents may cause disturbance on surrounding electrical conductors by cross-talk. For that reason, the Sepam bonding conductor or strap must be separated from all other electrical connections made to a Sepam.

Equipotential Bonding of Sepam Accessories

The following accessories should be connected to ground.

References	Sepam Accessories
59638	ECI850 Sepam IEC 61850 server
59641	MET148-2 module with 8 temperature sensors (RTDs)
59642	ACE949-2 2-wire RS 485 network interface
59643	ACE959 4-wire RS 485 network interface
59647	MSA141 module with 1 analog output
59658	ACE850TP RJ45 Ethernet multi-protocol interface (IEC 61850, Modbus TCP/IP)
59659	ACE850FO fiber optic Ethernet multi-protocol interface (IEC 61850, Modbus TCP/IP)
59723	ACE969TP-2 2-wire RS 485 multi-protocol interface (Modbus, DNP3 or IEC 60870-5-103)
59724	ACE969FO-2 fiber optic multi-protocol interface (Modbus, DNP3 or IEC 60870-5-103)

References	Sepam Accessories - Converters
59648	ACE909-2 RS 232/RS 485 converter
59649	ACE919CA RS 485/RS 485 converter (AC power supply)
59650	ACE919CC RS 485/RS 485 converter (DC power supply)

Principles of Equipotential Bonding of Sepam Accessories

Remote optional Sepam modules are mounted on a symmetrical or asymmetrical DIN rail. The same as for Sepam, equipotential bonding of the remote optional modules calls for special care and the shortest possible electrical connections must be used.

By expertly creating the various bonding connections, high-frequency disturbing currents (common mode currents) flowing to ground can be controlled:

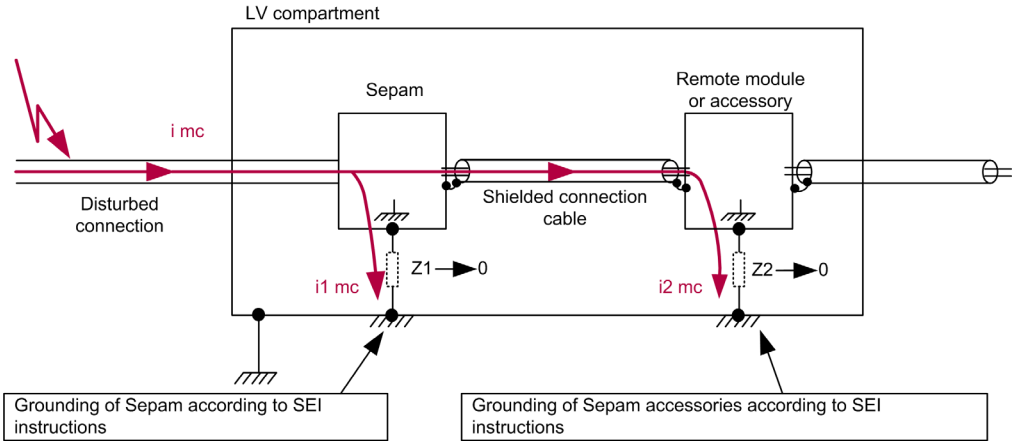

The value of impedances Z1 and Z2 is very low: $i_{mc} = i1_{mc} + i2_{mc}$ where $i1_{mc} >> i2_{mc}$

Equipotential Bonding Procedures for Sepam Accessories

For all accessories except converters:

Step	Action
1	Mount an earthing terminal on a symmetrical DIN rail, as close as possible to the accessory.

2	Connect an electrical conductor or a strap between the earthing terminal on the DIN rail and the Sepam accessory "earth" terminal:
	● Tinned copper strap:
	  ● Length ≤ 200 mm (8 in.)
	  ● Cross-section ≥ 6 mm² (AWG 10)
	● Electrical conductor fitted with a 4 mm (0.16 in.) ring lug:
	  ● Length ≤ 200 mm (8 in.)
	  ● Cross-section ≥ 2.5 mm² (AWG 12)

For converters:

Step	Action
1	Mount an earthing terminal on a symmetrical or asymmetrical DIN rail, as close as possible to the converter.

2	Connect an electrical conductor or a strap between the earth terminal on the DIN rail and the converter metal casing (connection point on the back of the metal casing):
	● Tinned copper strap:
	  ● Length ≤ 200 mm (8 in.)
	  ● Cross-section ≥ 6 mm² (AWG 10)
	● Electrical conductor:
	  ● Length ≤ 200 mm (8 in.)
	  ● Cross-section ≥ 2.5 mm² (AWG 12)

Sepam Power Supply Source

General

Sepam needs an external power supply source to operate.

Depending on the Sepam model, a DC or AC supply source is required:

Sepam Model	Supply Voltage	Tolerance
Sepam series 10 • • • A	24 to 125 V DC 100 to 120 V AC	+/- 20%
Sepam series 10 • • • E	110 to 250 V DC 100 to 240 V AC	+/- 20%
Sepam series 10 • • • F	220 to 250 V DC	+/- 20%
Sepam series 20	24 to 250 V DC 110 to 240 V AC	-20%/+10% -20%/+10%
Sepam series 40	24 to 250 V DC 110 to 240 V AC	-20%/+10% -20%/+10%
Sepam series 80	24 to 250 V DC	-20%/+10%
Sepam 2000 S26	24 to 30 V DC 48 to 127 V DC 220 to 250 V DC	+/- 20% +/- 20% -20%/+10%
Sepam 2000 S36	24 to 30 V DC 48 to 127 V DC 220 to 250 V DC	+/- 20% +/- 20% -20%/+10%

Detailed characteristics of the power supply for each Sepam model, in particular the acceptable ripple content and the inrush current, are given in the Sepam user manuals.

Sepam Supply Source Functions

The Sepam supply source performs several functions:

- First of all, it supplies the electrical power needed for the Sepam relay to operate
- It reinforces Sepam's galvanic insulation
- It eliminates, in certain conditions, constraints relating to the installation's electrical distribution earthing system arrangement, by setting up the TN-S system

Electrical Characteristics of the Sepam Supply Source

The Sepam power supply must comply with the Low Voltage and electromagnetic compatibility directives (CE marking). The power supplies developed by Schneider Electric comply with these requirements.

The dielectric strength of the power supply must be greater than or equal to the dielectric strength of the Sepam power supply input (i.e. 2 kVrms). The cabling and connection accessories inserted in the Sepam supply conductors must also meet this requirement.

The Sepam supply source is obviously sized to be capable of drawing the current consumed by Sepam and must also be capable of supplying the inrush current at the time of the Sepam relay is powered up (or as many Sepam units as are present).

For a DC power supply (full wave or three-phase rectifier), the AC ripple voltage superimposed on the DC component of the supply voltage must be compatible with the Sepam characteristics.

Cabling Recommendations

The electrical conductors connected to the Sepam power supply input are run along the metal structures of the MV compartment and then the LV compartment. Running them along the metal structures reduces ground loops. The conductors are held in the same strand and, if possible twisted, to avoid the creation of cabling loops.

Also, when the Sepam supply conductors include a protective earth conductor (PE), the PE must be run with the active supply conductors (+ polarity and 0 V for DC supply, phase and neutral for AC supply).

Installation of the Sepam Supply Source

The supply source can be common to several electronic devices in the LV compartment. It can supply equipment other than Sepam protection relays (electronic devices, actuators, etc.).

The Sepam power supply source can be:
- Integrated in the LV compartment
- Or located outside the compartment

Sepam Supply Source Integrated in the LV Compartment

It is preferable for the supply source to be integrated in the LV compartment.

Whatever the type of supply source required, the LV compartment should be designed to house and facilitate implementation of the following components:
- An isolation transformer if the earthing system arrangement is IT or TN-C (only in the case of Sepam AC supply)
- A surge suppressor if the installation is situated in an area highly exposed to lightning (overhead MV line, lightning strike density greater than 1)
- An EMC filter if the installation is located in a highly disturbed electromagnetic environment (e.g. very high-power motor, very high-power converter)

These components should be included from the point where the supply conductors enter the LV compartment.

When the supply sources are mounted on a DIN rail, an earthing terminal can be used to connect the 0 V (or the neutral) of the Sepam supply source to ground.

Sepam Supply Source Located Outside the LV Compartment

The Sepam supply source can be located outside the LV compartment (e.g. installed in an auxiliary distribution panel).

In such cases, particular precautions must be considered. The Sepam supply conductors may be source of disturbing currents, induced by the presence of surrounding conductors (e.g. power conductors). These disturbing currents are conveyed on the Sepam supply conductors and can adversely affect Sepam operation.

In such conditions, check that the supply conductors are held together (use of a twisted wire connection) and run along the metal structures of the installation. Nevertheless, these precautions may sometimes prove insufficient when equipotential bonding has not been established in the installation or when the proximity of disturbing devices in the vicinity is too great a constraint.

Overvoltage protection and an electromagnetic interference filter are then recommended in the LV compartment. Allowance should be made for these components to be installed from the point where the supply conductors enter the LV compartment *(see page 30)*.

LV Compartment and Sepam Power Supply

Introduction

There are 5 possible scenarios for the LV compartment and Sepam power supply:

- LV compartment and Sepam power supplied by AC voltage
- LV compartment power supplied by AC voltage and Sepam power supplied by DC voltage
- LV compartment and Sepam power supplied by non-isolated DC voltage
- LV compartment and Sepam power supplied by isolated DC voltage
- Power supply for Sepam and power supply for the logic inputs/outputs

LV Compartment and Sepam Power Supplied by AC Voltage

Sepam's electrical power supply should be as similar as possible to the diagram below:

- General overload protection
- Isolation transformer (if the TN-S or TT earthing system arrangement has not been created in the installation)
- Star-type distribution of AC power supplies to the various equipment items in the LV compartment
- Surge suppressor (if necessary): varistor with a 20 mm (0.8 in.) diameter and 275 V AC voltage or Schneider Electric PRI surge arrester mounted between phase and neutral.
- EMC filter (if necessary):
  - Withstand voltage 275 V AC
  - Withstand current 1.5 times higher than the rating of the current protection device mounted upstream of the Sepam relay and of all the auxiliaries supplied by the protection device
  - Filter attenuation in differential mode 20 dB or higher between 100 kHz and 50 MHz (e.g. FN 2320 Schaffner)

NOTE: The isolation transformer calls for a TN-S earthing system arrangement (transformer secondary grounded by as short a connection as possible).

This transformer is used to:

- Get round all the constraints of the installation's earthing system arrangement
- Isolate the Sepam supply conductors from any disturbing devices that may be connected to the LV power system (e.g. motors)
- Eliminate the impact of any modifications on the installation's electrical distribution system

NOTE: The surge suppressor and EMC filter are particularly recommended when the Sepam relay is used in environments with high levels of electromagnetic interference.

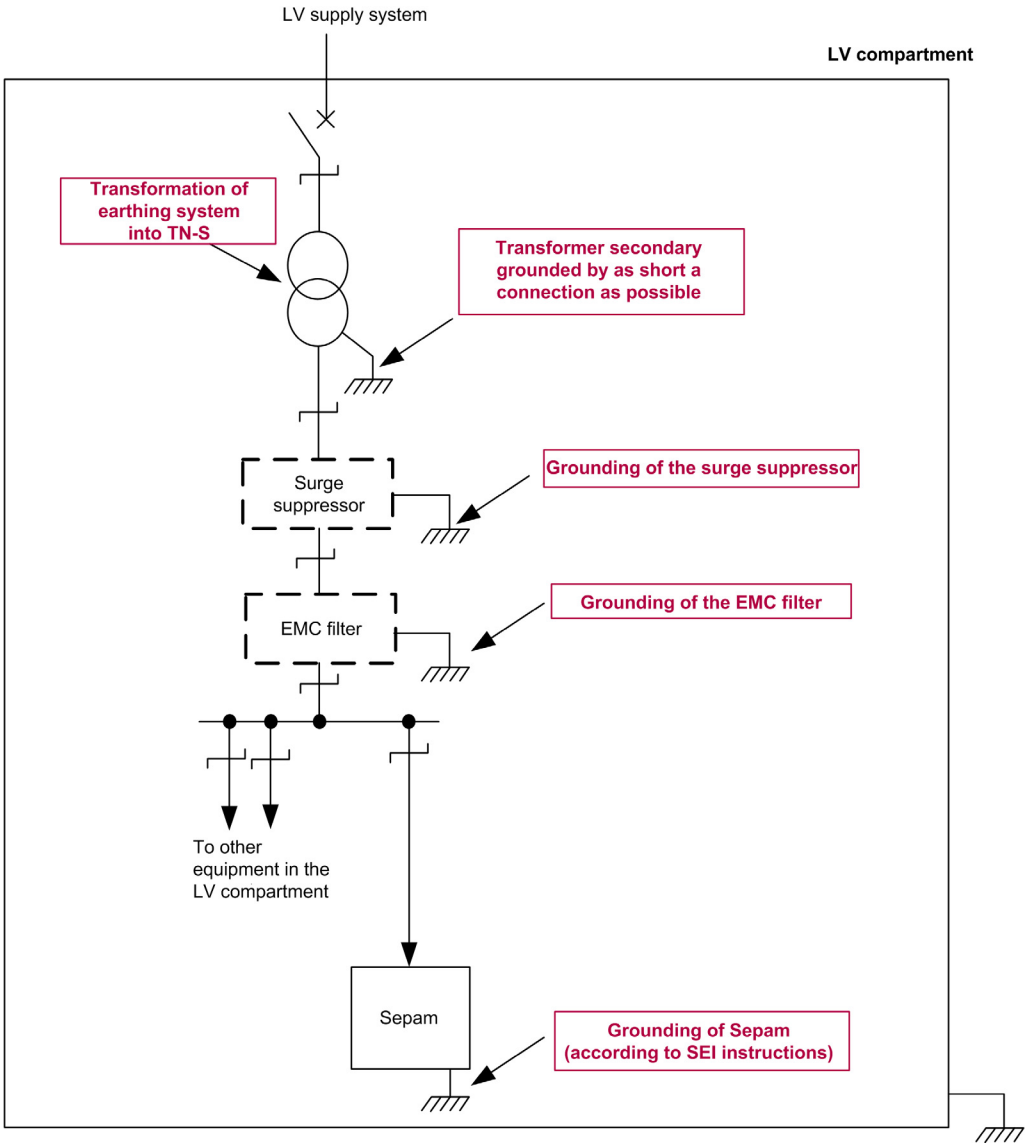

LV Compartment Power Supplied by AC Voltage and Sepam Power Supplied by DC Voltage

Sepam's electrical power supply should be as similar as possible to the diagram below:

- General overload protection
- Isolation transformer (if the TN-S or TT earthing system arrangement has not been created in the installation)
- Star-type distribution of AC power supplies to the various equipment items in the LV compartment
- 0 V of Sepam's DC power supply grounded by as short a connection as possible
- Star-type distribution of DC power supplies to the various equipment items in the LV compartment
- Surge suppressor (if necessary): varistor with a 20 mm (0.8 in.) diameter and 275 V AC voltage or Schneider Electric PRI surge arrester mounted between phase and neutral.
- EMC filter (if necessary):
  - Withstand voltage 275 V AC
  - Withstand current 1.5 times higher than the rating of the current protection device mounted upstream of Sepam and of all the auxiliaries supplied by the protection device
  - Filter attenuation in differential mode 20 dB or higher between 100 kHz and 50 MHz (e.g. FN 2320 Schaffner)

NOTE: The isolation transformer calls for a TN-S earthing system arrangement (transformer secondary grounded by as short a connection as possible).

This transformer is used to:

- Get round all the constraints of the installation's earthing system arrangement
- Isolate the Sepam supply conductors from any disturbing devices that may be connected to the LV power system (e.g. motors)
- Eliminate the impact of any modifications on the installation's electrical distribution system

NOTE: The surge suppressor and EMC filter are particularly recommended when the Sepam relay is used in environments with high levels of electromagnetic interference.

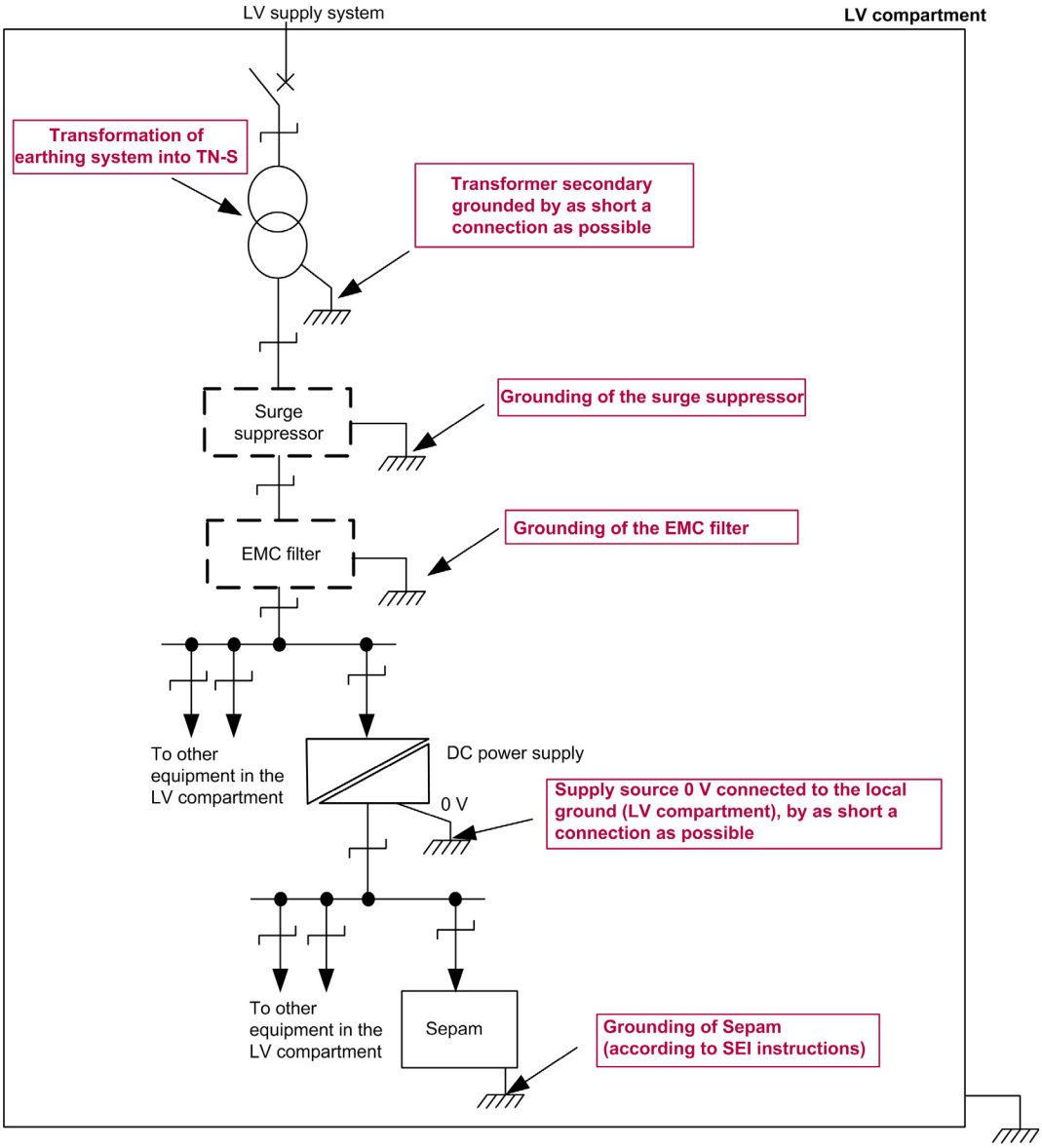

LV Compartment and Sepam Power Supplied by Non-Isolated DC Voltage

Depending on the country where the Sepam relay is installed, the supply source 0 V or + polarity can be earthed or connected to a local ground (item G1).

Sepam's electrical power supply should be as similar as possible to the diagram below:

- DC supply source connected to ground at a single point, to avoid any circulation of current
- Surge suppressor: Schneider Electric PRI surge arrester mounted between the + polarity and the 0 V (differential mode)
- EMC filter:
  - Withstand voltage higher than the external supply voltage
  - Withstand current 1.5 times higher than the rating of the current protection device mounted upstream of the Sepam relay and of all the auxiliaries supplied by the protection device
  - Filter attenuation in differential mode 20 dB or higher between 100 kHz and 50 MHz (e.g. FN 2320 Schaffner)
  - EMC filter with a cubicle in differential mode exclusively, common mode is excluded.

NOTE: The surge suppressor and EMC filter are particularly recommended when a Sepam relay is used in environments with high levels of electromagnetic interference.

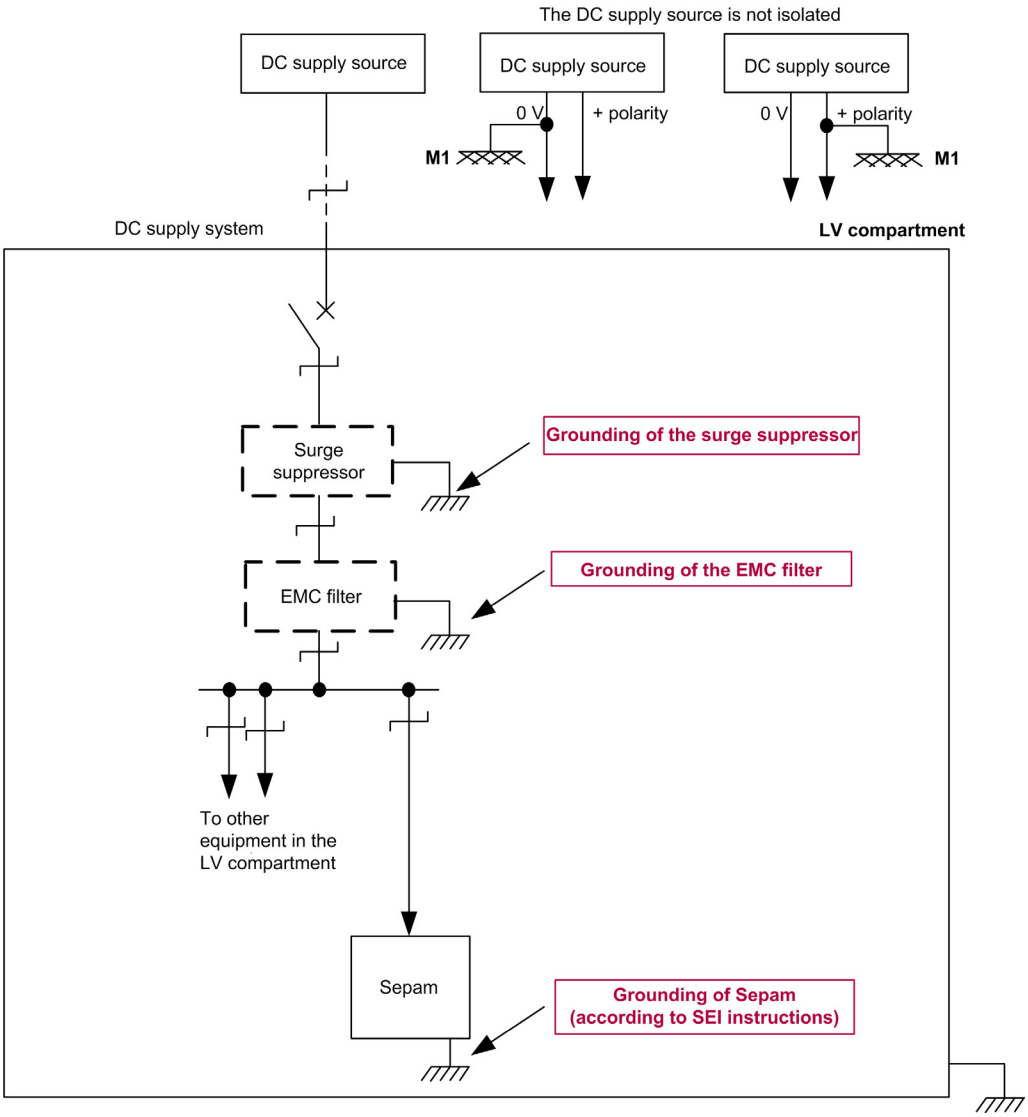

LV Compartment and Sepam Power Supplied by Isolated DC Voltage

Sepam's electrical power supply should be as similar as possible to the diagram below:

- Surge suppressor:
  - Schneider Electric PRI surge arrester mounted between the + polarity and the ground (common mode)
  - Schneider Electric PRI surge arrester mounted between the 0 V and the ground (common mode)
  - Schneider Electric PRI surge arrester mounted between the + polarity and the 0 V (differential mode)
- EMC filter:
  - Withstand voltage higher than the external supply voltage
  - Withstand current 1.5 times higher than the rating of the current protection device mounted upstream of Sepam and of all the auxiliaries supplied by the protection device
  - Attenuation of the filter in differential mode 20 dB or higher between 100 kHz and 50 MHz (e.g. FN 2320 Schaffner)

NOTE: The surge suppressor and EMC filter are particularly recommended when a Sepam relay is installed in environments with high levels of electromagnetic interference.

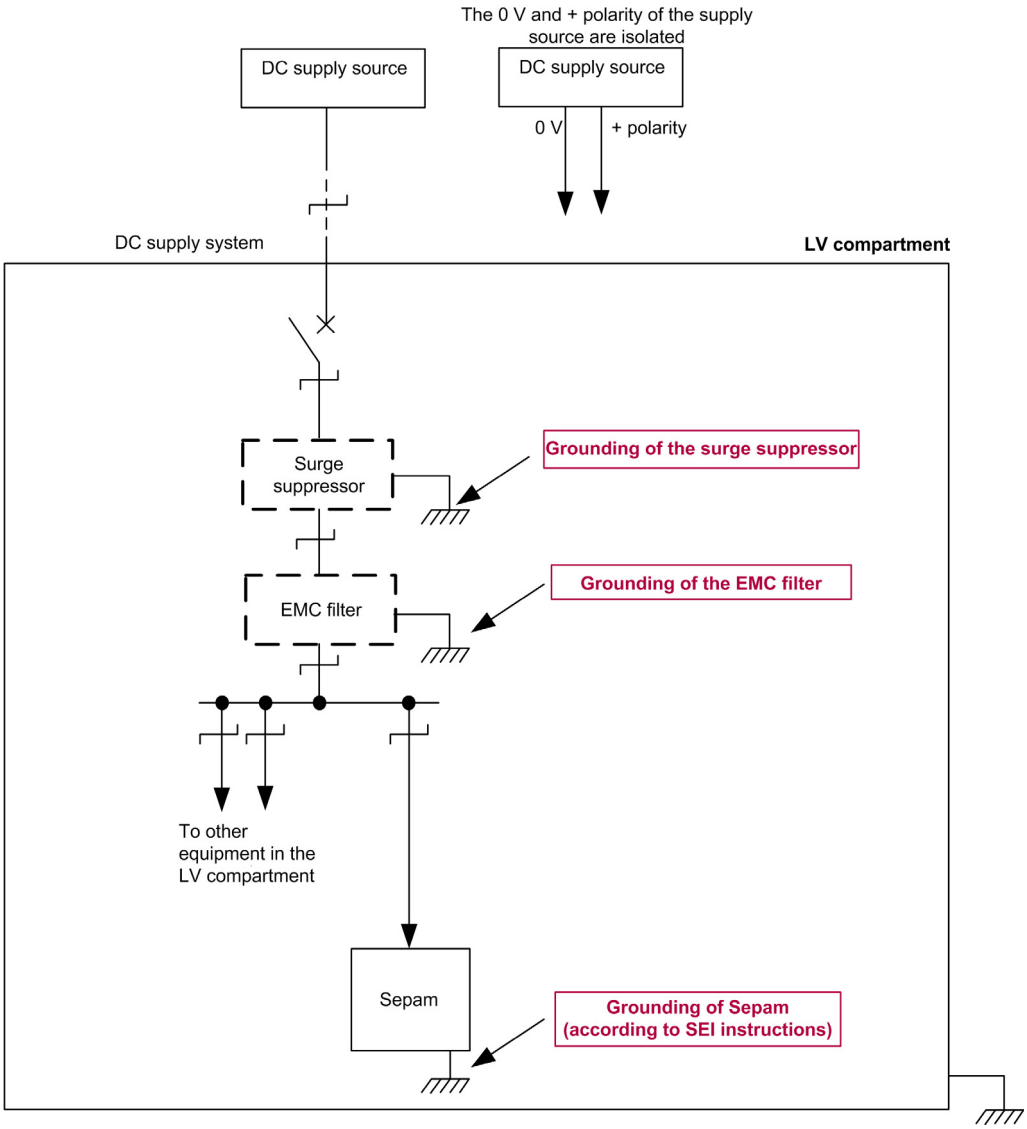

⚠ CAUTION

HAZARD OF PROTECTION MALFUNCTION

Detect and repair the first ground fault immediately when you are using an isolated DC power supply source (IT connection).

Failure to follow these instructions can result in injury or equipment damage.

With a DC or single-phase supply, a number of faults can exist simultaneously between a polarity and earth without tripping the overcurrent protection. 2 faults on the same polarity will lead to a short-circuit in the control diagram and can potentially result in a malfunction such as for example preventing an emergency action.

Detection of Ground Faults on an Isolated DC Power System

Resorting to an isolated DC power system is a common solution where there is a need for continuity of service. A ground fault detector must be used to monitor this isolated system.

The use of a ground fault monitor for DC power systems can cause operating problems in some cases.

Some ground fault detectors do not detect symmetrical faults between + and – in relation to earth.

Wheatstone bridge ground fault detectors with a middle point (ICE DTB 210 for example) can, in the event of a ground fault or faulty pick-up setting (a few mA), modify the impedance of the electronic circuits supplied with the earthed 0 V.

Ground fault detectors that operate by injecting an extra-low frequency signal (a few Hz) between a polarity and earth can, in the event of ground faults, inject a voltage that can be superimposed on the installation's DC voltage into the system. This can activate the safety systems that detect under- or overvoltage, for example.

When installing such devices, it is advisable to check that the Sepam relays do not show any operating problems if a ground fault is present.

Power Supply for Sepam and Power Supply for the Logic Inputs/Outputs

The Sepam supply source and the supply source dedicated to the logic inputs/outputs must not be common, for the following reasons:

- To avoid disturbing the Sepam supply conductors
- To preserve the galvanic insulation of the supply source dedicated to the logic inputs/outputs
- To avoid creating undesirable cabling loops which are often difficult to detect

CAUTION

HAZARD OF IMPROPER OPERATION

When connecting the logic or analog inputs/outputs:

- Do not form large cabling loops in the various power supplies
- Do not short-circuit any of the galvanic insulation

Failure to follow these instructions can result in equipment damage.

The logic input/output conductors exiting the MV cubicle may be a source of electromagnetic interference. As it spreads throughout the MV cubicle, this interference must not affect the Sepam supply conductors (and the cabling inside the cubicle in general).

The block diagram below shows the separation made between the supply source dedicated to Sepam and the supply source assigned to the logic inputs/outputs:

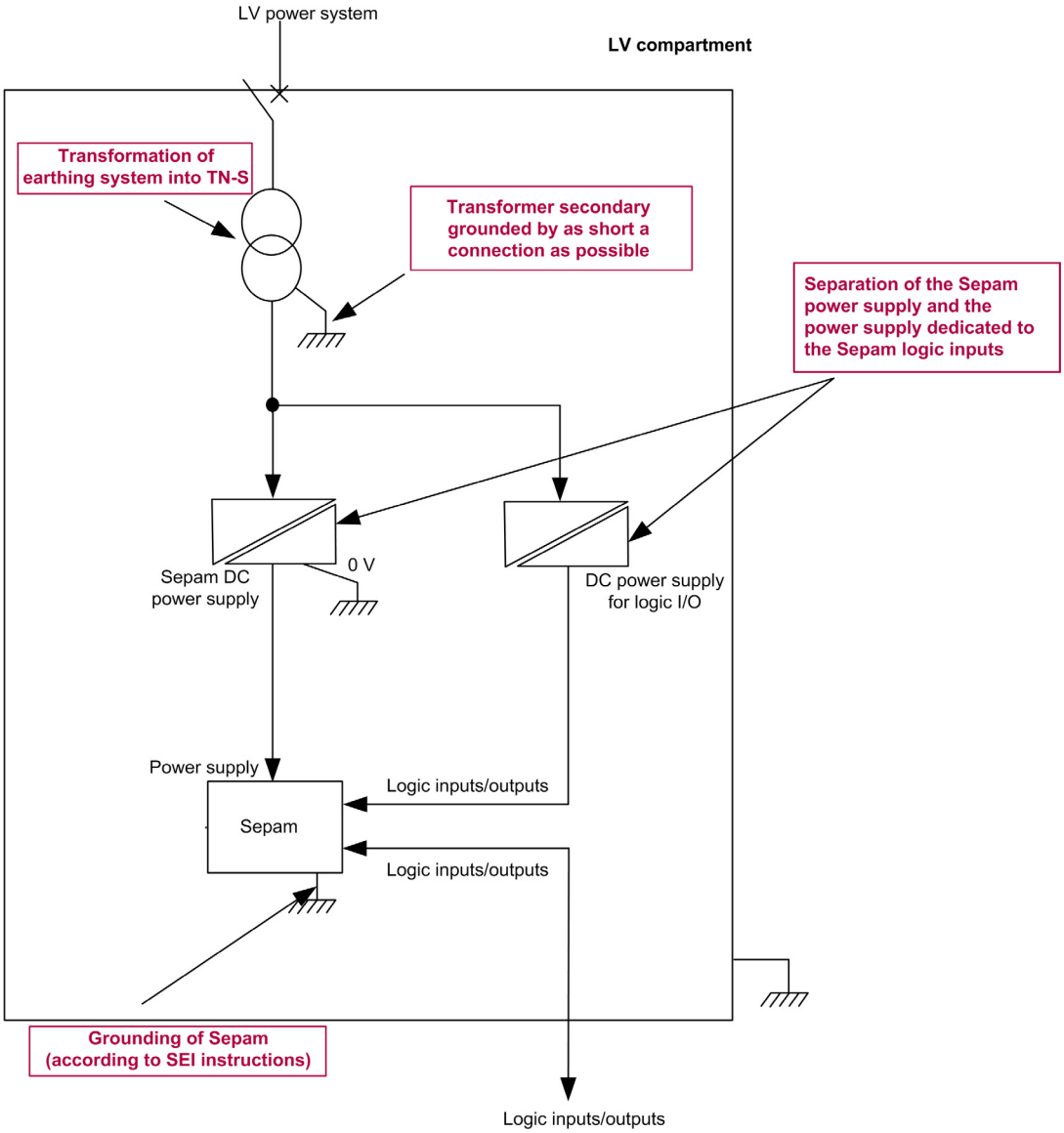

Power Supply for an Installation with a PLC

In installations, Sepam is increasingly integrated in complex management information systems. It may be associated with a PLC dedicated to centralized installation management.

A large number of data are exchanged between the Sepam protection relay and a PLC:
- Logic inputs
- Logic outputs
- Analog data, etc.

In this type of installation, it is also advisable to pay attention to the PLC power supply. This PLC should ideally be supplied by an electrical distribution system that has a TN-S earthing system arrangement.

Great care must be taken regarding the distribution of the power supplies for the logic or analog inputs/outputs in order to avoid forming large cabling loops in the various power supplies.

CAUTION

HAZARD OF IMPROPER OPERATION

When connecting the logic or analog inputs/outputs:
- Do not form large cabling loops in the various power supplies
- Do not short-circuit any of the galvanic insulation

Failure to follow these instructions can result in equipment damage.

3.2 Current and Voltage Inputs

What's in this Section?

This section contains the following topics:

Sepam Phase Current Inputs

Sepam Phase Current Inputs (I1 to I3 or I'1 to I'3)

Sepam uses a special connector for measuring phase currents. This device can be used for galvanic insulation of the Sepam input circuits and adaptation of the currents measured by the MV current transformers (CTs). The connector includes a highly-sensitive (low level) current measurement core-balance CT for each phase.

There are several different connectors depending on the Sepam model:

Sepam Model	Phase Current Measurement	Characteristics of Conductors on Current Inputs
Sepam series 10	Via CT and shorting connector B (the core balance CTs are not in the connector but inside the Sepam)	Connection via: 1.5 to 6 mm² conductor (AWG 14 to AWG 10) with 4 mm (0.16 in.) ring lug. **The dielectric strength of the different components inserted in the connection (conductors, intermediate terminal blocks, etc.) must be greater than the dielectric strength of the Sepam input (i.e. 2 kVrms).**
Sepam series 20 Sepam series 40 Sepam series 80	Via CT and CCA630 or CCA634	
Sepam 2000	Via CT and CCA660	

Cabling Recommendations

The electrical conductors connected to the Sepam connector terminals are run along the metal structures of the MV cubicle and then along the LV compartment. Holding the conductors on the metal structures reduces ground loops. The conductors are held in the same strand, and may be twisted, to avoid the creation of a cabling loop *(see page 17)*.

Example of connection with the CCA630 connector:

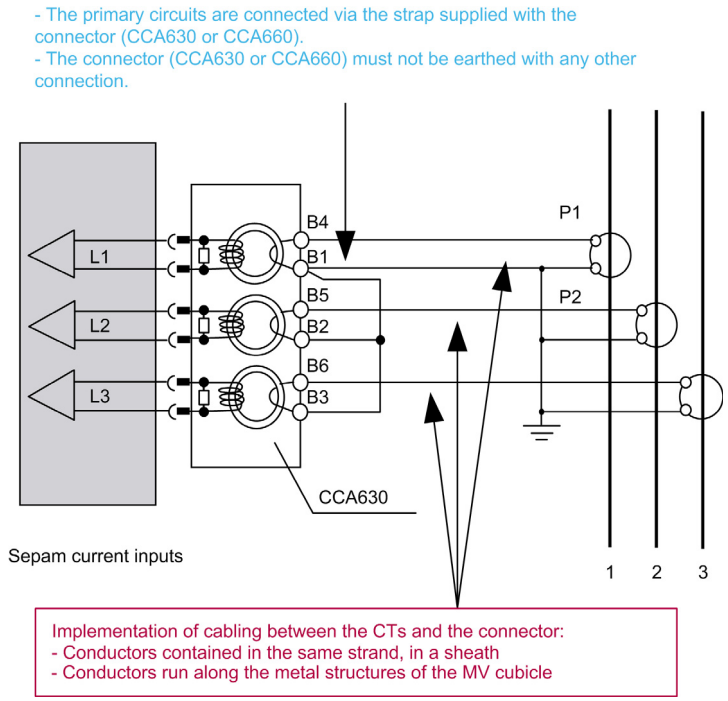

Sepam Residual Current Input

Sepam Residual Current Input (I0 or I'0)

Sepam uses different techniques to determine the residual current in the installation:

- Use of CSH120 or CSH200 core balance CTs
- Use of CSH30 interposing ring CT
- Use of ACE990 interface

CSH120 or CSH200 Core Balance CTs

Introduction

The only difference between the CSH120 and CSH200 core balance CTs is their inner diameters: 12 mm (5 in.) and 200 mm (8 in.). Because of their low voltage insulation, they must only be used on cables.

Mounting Recommendations

⚠ DANGER

HAZARD OF ELECTRIC SHOCK, ELECTRIC ARC OR BURNS

- Install the CSH120 or CSH200 core balance CTs on insulated cables.
- Earth the cable screens with a rated voltage of more than 1000 V.

Failure to follow these instructions will result in death or serious injury.

Following the recommendations below:

- Group the MV cable(s) in the center of the core balance CT.
- Hold the cable with cable ties made of a non-conductive material.
- Remember to insert the 3 medium-voltage cable screen earthing cables back through the core balance CT.

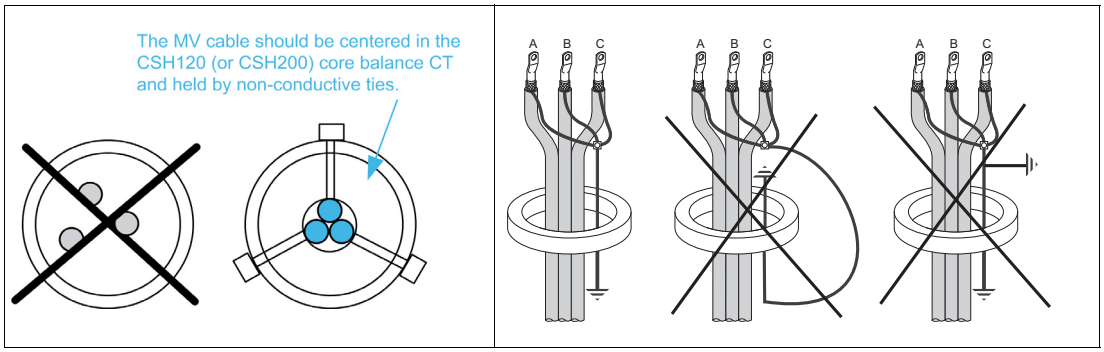

Cabling Recommendations

It is advisable to connect the CSH120 or CSH200 core balance CT directly to the Sepam connector using a twisted two-wire connection.

However, a shielded cable can also be used, provided that it meets the following electrical conditions:
- Sheathed cable shielded by tinned copper strap
- Min. cable cross-section: 0.93 mm² (AWG 18)
- Max. linear resistance: 100 mΩ/m
- Min. dielectric strength: 1000 V (700 Vrms)

The maximum resistance of the Sepam connection wiring should not be more than 4 Ω.

This cable should not be more than 20 m (65 ft) long (with a maximum linear resistance of 100 mΩ /m).

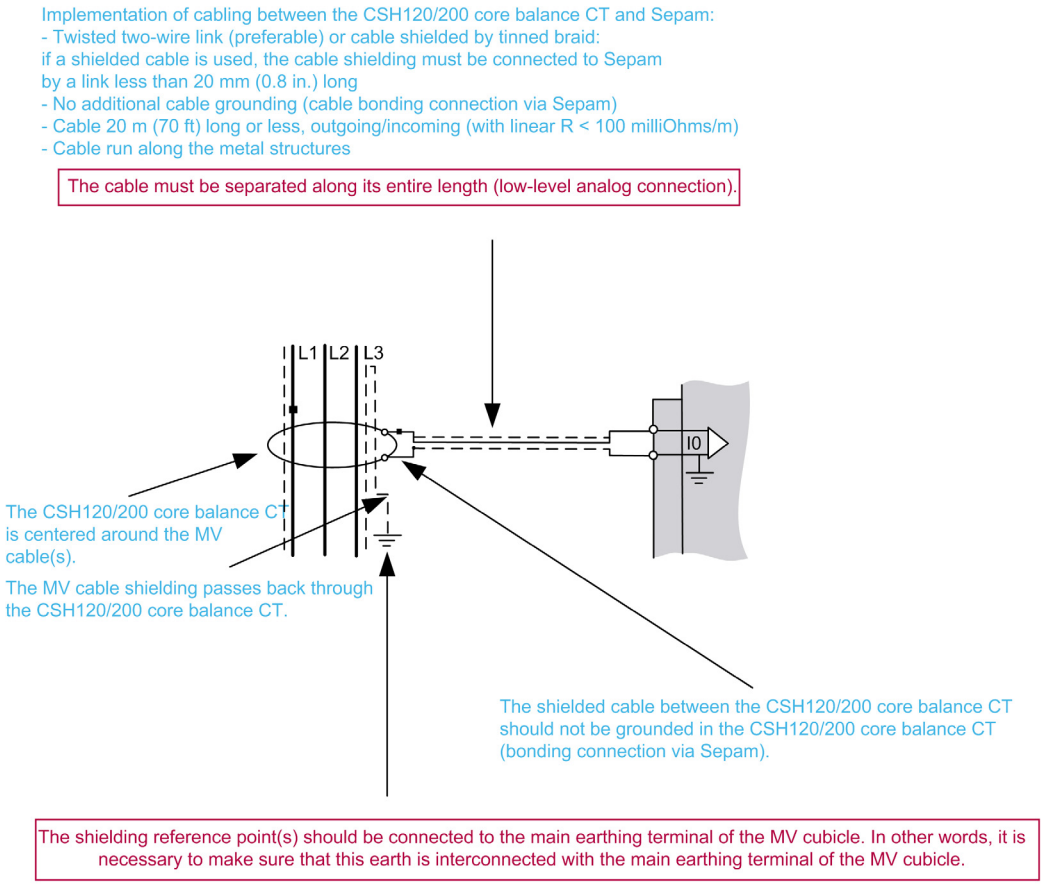

CSH30 Interposing Ring CT

Introduction

The CSH30 interposing ring CT is used when the residual current is measured using a current transformer with a 1 A or 5 A secondary circuit. The CSH30 interposing ring CT adapts the signals between the current transformer and the Sepam residual current input.

The CSH30 interposing ring CT is mounted on a symmetrical DIN rail. It can also be mounted on a plate, using the mounting holes provided in its base.

NOTE: The CSH30 is not used with the Sepam series 10.

Mounting Recommendations

The CSH30 interposing ring CT should be installed in an area of the LV compartment in which the magnetic activity is low, to avoid disturbance (risk of incorrect measurements). The CT should be kept away from 50 Hz supply transformers and power cables in particular (risk of measurement being disturbed by the magnetic field radiated by such components).

Cabling Recommendations

It is advisable to connect the CSH30 core balance CT secondary directly to the Sepam connector using a twisted two-wire connection.

However, a shielded cable can also be used, provided that it meets the following electrical conditions:

- Sheathed cable shielded by tinned copper strap
- Cable cross-section between 0.93 mm² (AWG 18) and 2.5 mm² (AWG 12)
- Max. linear resistance: 100 mΩ/m
- Min. dielectric strength: 1000 V (700 Vrms) for functional reasons
- Maximum cable length: 2 m (7 ft)

Implementation of cabling between the CSH30 and Sepam:
- Twisted two-wire connection (preferable) or cable shielded by tinned braid: if a shielded cable is used, the cable shielding must be connected to Sepam by a link less than 20 mm (0.8 in.) long
- No cable grounding (cable bonding connection via Sepam)
- Cable 2 m (7 ft) long or less (with linear R < 100 milliOhms/m)
- Cable run along metal structures

Implementation of the link between the MV core balance CT and the CSH30 interposing ring CT:
- The conductors connected to the secondary circuit of the MV core balance CT are held in the same strand, in a sheath so as not to create loops.
- The conductors are run along the metal structures of the MV cubicle.

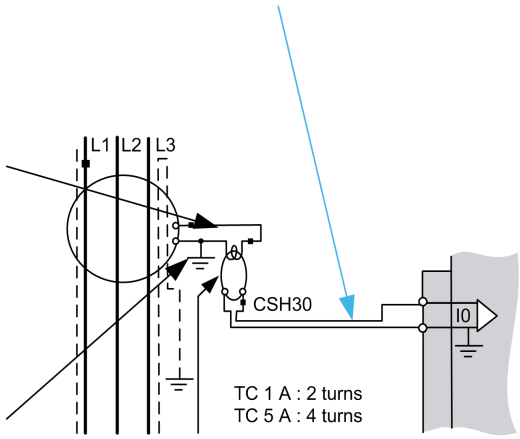

Earthing the MV core balance CT secondary:
- The secondary is earthed via a copper bar, as short as possible, with a rectangular cross-section.
- The main earthing terminal of the MV cubicle constitutes the reference potential for the MV core balance CT.

- The conductors connected to the secondary circuit of the CSH30 interposing ring CT are held in the same strand (preferably a twisted 2-wire connection).
- The conductors connected to the secondary circuit of the CSH30 interposing ring CT are run along the metal structures of the MV cubicle.

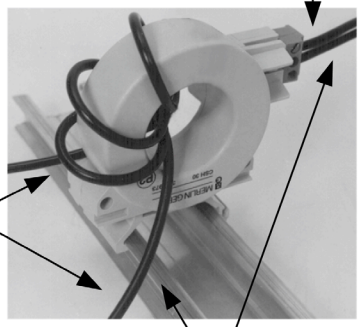

- The outgoing and incoming wires passing through the primary circuit of the CSH30 interposing ring CT are held together, so as not to create loops between them.
- The outgoing and incoming conductors are run along the metal structures of the MV cubicle.

The conductors of the primary and secondary circuits of the CSH30 interposing ring CT are separated, to avoid the coupling of disturbances between the two current circuits.

ACE990 Interface

Introduction

The ACE990 interface is used to adapt measurements between an MV core balance CT with a ratio of 1/n (where 50 ≤ n ≤ 1500), and the Sepam residual current input.

NOTE: The ACE990 interface is not used with the Sepam series 10.

Cabling Recommendations

Only one core balance CT can be connected to the ACE990 interface.

The secondary circuit of the MV core balance CT is connected to 2 of the 5 input terminals of the ACE990 interface. The core balance CT must be connected to the interface in the right direction in order for it to work correctly, in particular the S1 mark on the MV core balance CT must be connected to the terminal with the lowest index (Ix).

The cables to be used are:

Cable Type	Description
Cable between the MV core balance CT and the ACE990 interface	The electrical characteristics are as follows: ● Maximum cable length: 50 m (164 ft) ● Min. dielectric strength: 1000 Vrms ● Maximum wiring length: Depending on the core balance CT rated power ● Maximum conductor cross-section: 2.5 mm² (AWG 12) (ACE990 interface connection capacity)
Cable between the ACE 990 interface and the Sepam relay	A twisted two-wire connection is recommended. However, a shielded cable can also be used, provided that it meets the following electrical conditions: ● Cable shielded by sheathed tinned copper strap ● Maximum length: 2 m (7 ft) ● Cable cross-section between 0.93 mm² (AWG 18) and 2.5 mm² (AWG 12) ● Max. linear resistance: 100 mΩ/m ● Min. dielectric strength: 100 Vrms

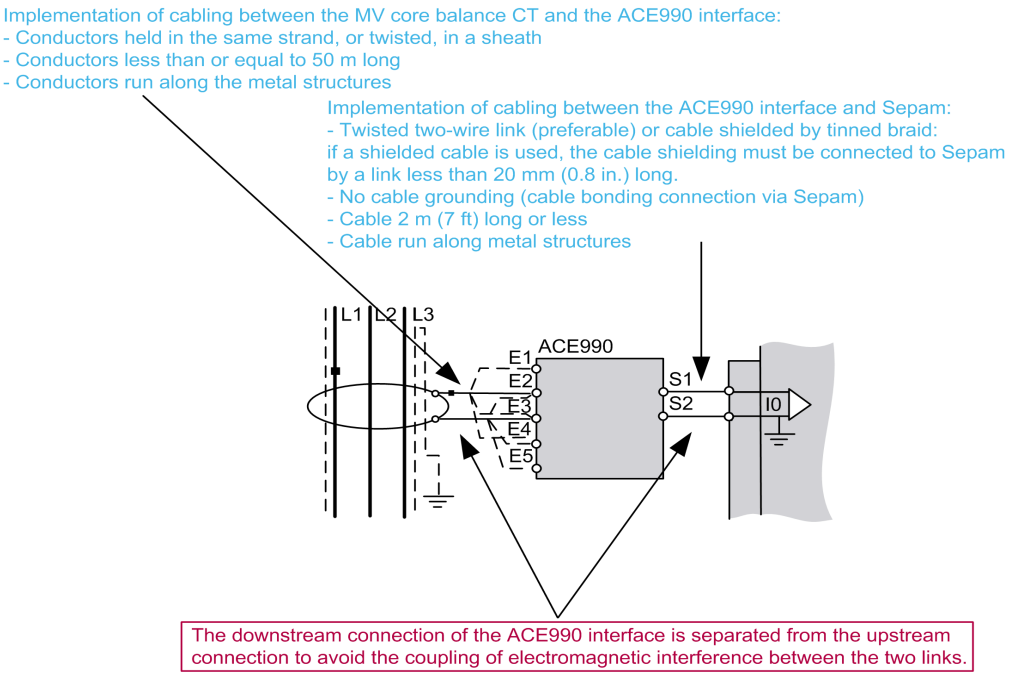

Sepam Voltage Inputs

Sepam Voltage Inputs (U21, U32, U13, V0, V1, V2, V3)

The Sepam relay acquires voltage measurements directly via the MV voltage transformers (VTs) or via the CCT640 special connector.

The CCT640 connector contains 4 transformers. It provides galvanic insulation of the Sepam input circuits and adaptation of the signals measured by the Sepam MV voltage transformers (VTs).

The connection of the voltage inputs differs according to the Sepam model:

Sepam Model	Voltage Measurement	Characteristics of Conductors on Voltage Inputs
Sepam series 10	No voltage measurement	–
Sepam series 20	Via VT and CCT640	Connection to CCT640 connector: 1 conductor per terminal, 0.2 to 2.5 mm² max. (AWG 24 to AWG 12) **The dielectric strength of the various components inserted in the connection (conductors, intermediate terminal blocks, etc.) must be greater than the dielectric strength of the Sepam input (i.e. 2 kVrms).**
Sepam series 40	Measurement supplied by VT	Connection to Sepam: 1 conductor per terminal, 0.2 to 2.5 mm² max. (AWG 24 to AWG 12) **The dielectric strength of the various components inserted in the connection (conductors, intermediate terminal blocks, etc.) must be greater than the dielectric strength of the Sepam input (i.e. 2 kVrms)**.
Sepam series 80	Via VT on the E and/or CCT640 connector	Connection to CCT640 connector: 1 conductor per terminal, 0.2 to 2.5 mm² max. (AWG 24 to AWG 12) **The dielectric strength of the various components inserted in the connection (conductors, intermediate terminal blocks, etc.) must be greater than the dielectric strength of the Sepam input (i.e. 2 kVrms)**.
Sepam 2000	Measurement supplied by VT	Connection to CCT640 connector: 1 conductor per terminal, 2.5 mm² max. (AWG 12) **The dielectric strength of the various components inserted in the connection (conductors, intermediate terminal blocks, etc.) must be greater than the dielectric strength of the Sepam input (i.e. 2 kVrms)**.

Cabling Recommendations

The electrical conductors connected to the Sepam voltage inputs or to the CCT640 voltage interface terminals are run along the metal structures of the MV cubicle and then along the LV compartment. Running them along the metal structures reduces ground loops. The conductors are held in the same strand, and may be twisted, to avoid the creation of cabling loops.

For more information, see the relevant section *(see page 17)*.

Earthing the CCT640 Connector

⚠ DANGER

HAZARD OF ELECTRIC SHOCK, ELECTRIC ARC OR BURNS

The CCT640 connector must be connected to a protective earth conductor.

Failure to follow these instructions will result in death or serious injury.

The CCT640 connector can be disconnected from a Sepam relay, even when the MV voltage transformers (VTs) are energized. To ensure people's safety, the CCT640 connector must therefore be connected to a protective earth conductor. A connection terminal is provided on the CCT640 connector for this purpose. See the diagram on the next page.

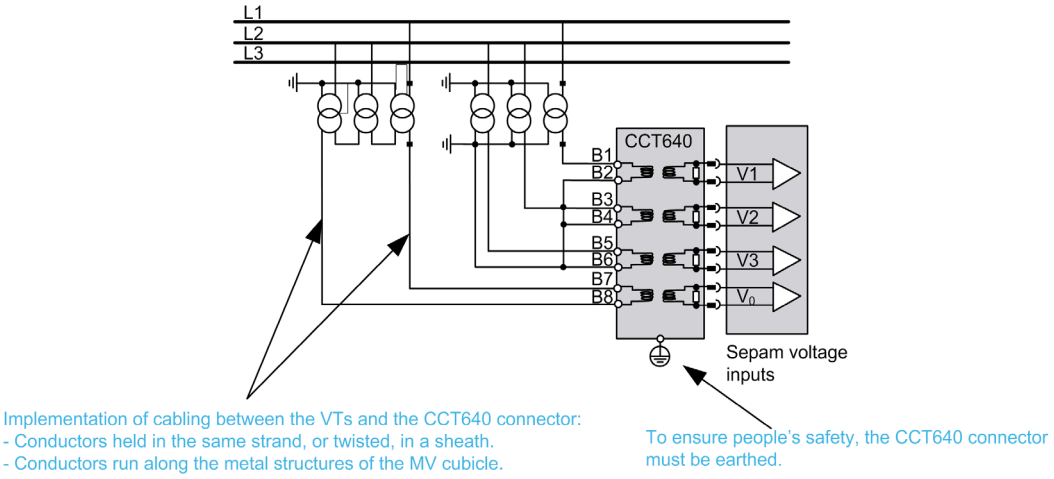

Special Recommendation Regarding the CCT640 Connector

It is advisable to connect each of the phase voltage measurement VT secondary circuits to Sepam, with a two-wire link, in order to make the Sepam voltage input cabling symmetrical. This precaution avoids the conversion of common mode currents into disturbing differential mode voltages detected at the Sepam input.

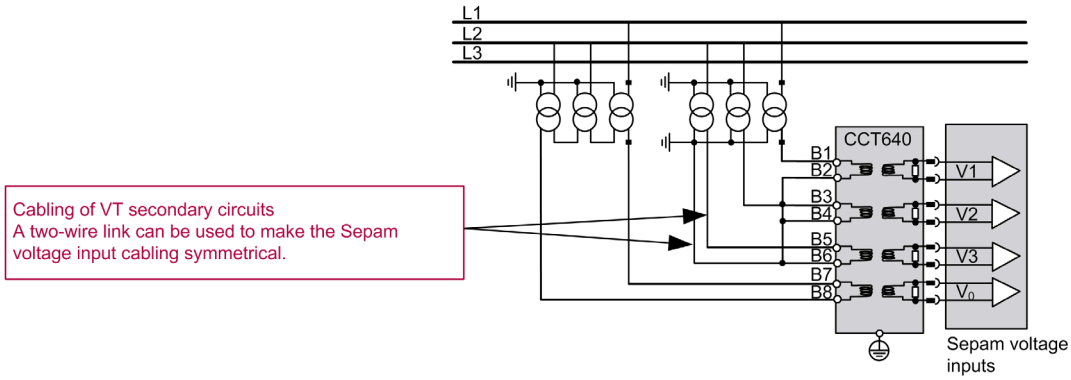

3.3 Logic Inputs and Outputs

What's in this Section?

This section contains the following topics:

Logic Inputs

Introduction

Sepam has a number of isolated logic inputs.

The user can use the logic inputs as he wishes or they may be assigned to a predefined application (e.g. motor protection application).

The logic inputs are potential-free and require an external power supply to operate (DC or AC supply source). The current consumed by these logic inputs is about 4 mA (10 mA for old generations of Sepam 2000 logic inputs).

The Sepam logic inputs are designed to operate over large distances. Given their very low electricity consumption and Sepam's high EMC immunity, in theory, the inputs can operate with conductors up to 5 km (3 mi) long or 10 km (6 mi), outgoing and incoming.

These theoretical results are not realistic since it is necessary to take account of environmental and installation conditions; however, these conditions are assumed to be ideal for the lengths indicated above.

To reach such operating performance levels, you should ensure:
- A shielded twisted pair is used on the Sepam logic inputs
- Scrupulous adherence to the rules for installing group 4 conductors
- Perfectly-controlled equipotentiality between the incoming and outgoing points of this link

In practice, and while still complying with the above points, we strongly recommend:
- Limiting the length of the electrical conductors connected to Sepam's logic inputs to 500 m (0.3 mi), i.e. 1000 m (0.6 mi) outgoing and incoming
- Using fiber optic or wireless data transmission

CAUTION

HAZARD OF IMPROPER OPERATION

- Do not use an AC supply if long distances need to be covered to pick up the logic input control signals.
- Select the input/output module according to its supply voltage.

Failure to follow these instructions can result in equipment damage.

With an AC supply, there is significant capacitive coupling all along the cables and the input can be activated continuously regardless of the state of the contact controlling it.

For more information on logic discrimination, see the corresponding section *(see page 63)*.

Selecting the Input/Output Module According to the Sepam Model

Sepam series 20/40/80 and Sepam 2000 can take the following input/output modules:

- Sepam series 20/40: MES114, MES114E or MES114F
- Sepam series 80: MES120, MES120G or MES120H
- Sepam 2000: ESB and ESTOR

Each module has a different 0/1 switching threshold.

The module should be chosen according to the type and the auxiliary power supply voltage dedicated to the inputs *(see page 51)*.

MES1•• modules without a suffix can operate with the whole power supply voltage range available without any risk of damage.

However an MES114 module used at 250 V DC can experience unwanted activation of one of its inputs if there is the slightest disturbance. The switching threshold is then less than 10% of the supply voltage, which represents a very low safety margin.

As a result, whenever the supply voltage is higher than 100 V DC, you should opt for module version E/F or G/H in order to increase the margin of immunity offered by an appropriate switching threshold.

If power is supplied by 2 batteries in series whose midpoint is earthed, select a switching voltage higher than the battery voltage in order to avoid unwanted activation in the event of a ground fault between the control switch and the input.

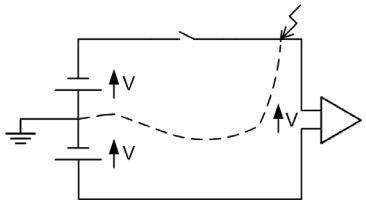

Input/Output Modules for Sepam Series 20/40

Logic Inputs		**MES114**	**MES114E**		**MES114F**	
Voltage		24 to 250 V DC	110 to 125 V DC	110 V AC	220 to 250 V DC	220 to 240 V AC
Range		19.2 to 275 V DC	88 to 150 V DC	88 to 132 V AC	176 to 275 V DC	176 to 264 V AC
Typical consumption		3 mA	3 mA	3 mA	3 mA	3 mA
Typical switching threshold		14 V DC	82 V DC	58 V AC	154 V DC	120 V AC
Input limit voltage	At state 0	≤ 6 V DC	≤ 75 V DC	≤ 22 V AC	≤ 137 V DC	≤ 48 V AC
	At state 1	≥ 19 V DC	≥ 88 V DC	≥ 88 V AC	≥ 176 V DC	≥ 176 V AC

Input/Output Modules for Sepam Series 80

Logic Inputs		**MES120**	**MES120G**	**MES120H**
Voltage		24 to 250 V DC	220 to 250 V DC	110 to 125 V DC
Range		19.2 to 275 V DC	170 to 275 V DC	88 to 150 V DC
Typical consumption		3 mA	3 mA	3 mA
Typical switching threshold		14 V DC	155 V DC	82 V DC
Input limit voltage	At state 0	< 6 V DC	< 144 V DC	< 75 V DC
	At state 1	> 19 V DC	> 170 V DC	> 88 V DC

Input/Output Modules for Sepam 2000

Logic Inputs		**ESB/ESTOR**		
Power supply voltage for the Sepam 2000		24 to 30 V DC	48 to 127 V DC	220 to 250 V DC
Typical consumption		4 mA(1)	4 mA(1)	3 mA
Input limit voltage	At state 0	< 6 V	< 25.4 V	< 50 V
	At state 1	> 17 V	> 33.6 V	> 154 V
(1) 10 mA for ESB and ESTOR modules made before 01/01/2000				

Types of Sepam Logic Input

Sepam provides the user with two types of logic input:
- Logic inputs isolated from ground, with a common connection point
- Logic inputs isolated from ground and independent

Selection and correct use of the logic inputs are important to ensure:
- Correct operation of Sepam and, more broadly, of the installation
- Availability of data provided by the digital sensors

Isolated Logic Inputs with a Common Connection Point

These logic inputs are isolated from ground, but are not isolated in relation to one another (common point). They should be used to acquire data from the following digital sensors:
- Isolated sensors
- Sensors that are not isolated but come from the same zone of an installation with equipotential bonding
- Sensors that preferably come from the same equipment (e.g. a motor)

The different logic data are contained in the same cable.

Isolated, Independent Logic Inputs

These logic inputs are isolated from ground, but are also isolated from one another. They should be used to acquire data from the following digital sensors:
- Non-isolated sensors (earthed)
- Remote sensors
- Sensors from several zones in the installation that do not have equipotential bonding
- Sensors from different devices

To ensure each logic input is isolated, it is essential for each logic data item to be contained in an independent cable.

Cabling Recommendations

The electrical conductors connected to Sepam's logic inputs are run along the metal structures of the MV cubicle and then the LV compartment. Running them along the metal structures reduces ground loops. The conductors are held in the same strand and, if possible twisted, to avoid the creation of cabling loops.

CAUTION

HAZARD OF IMPROPER OPERATION

When connecting the logic inputs:
- Do not form large cabling loops in the various power supplies
- Do not short-circuit any of the galvanic insulation

Failure to follow these instructions can result in equipment damage.

When the environmental and installation conditions are highly unfavorable for the Sepam unit, a shielded twisted pair should be used. In such cases, the cable shielding is connected to the local ground at both ends (provided that the installation has an equipotential bonding network).

Sepam Model	Characteristics of Logic Input Conductors
Sepam series 10 Sepam series 20 Sepam series 40 Sepam series 80	Twisted two-wire link 1 conductor per terminal, 0.2 to 2.5 mm² max. (AWG 24 to AWG 12) **The dielectric strength of the various components inserted in the connection (conductors, intermediate terminal blocks, etc.) must be greater than the dielectric strength of the Sepam input (i.e. 2 kVrms).**
Sepam 2000	Twisted two-wire link 1 conductor per terminal, 2.5 mm² max. (AWG 24 to AWG 12) **The dielectric strength of the various components inserted in the connection (conductors, intermediate terminal blocks, etc.) must be greater than the dielectric strength of the Sepam input (i.e. 2 kVrms).**

Logic Input Power Supply Source

The external power source used to supply Sepam's logic inputs must comply with the low voltage and electromagnetic compatibility directives (CE marking). The power supplies developed by Schneider Electric comply with these requirements.

The dielectric strength of the supply source must be greater than or equal to the dielectric strength of Sepam's logic inputs (i.e. 2 kVrms).

Sepam Logic Input Cabling Configurations

We recommend that you distinguish between the logic inputs used in the application and any unused logic inputs. To further reinforce the Sepam unit's level of immunity, we recommend that you short-circuit the connection terminals of any logic inputs that are not used in the application. To do this, an electrical conductor as short as possible (bridge) is wired directly between the two terminals of the unused logic input connector. To make it easier to read the diagrams in this chapter, this particular point is not represented in the various diagrams on the following pages.

In each application, a distinction should be made between the logic inputs that remain within the perimeter of the MV cubicle and those exiting the MV cubicle. To illustrate these suggestions, we will limit ourselves to a few examples of use of isolated, independent logic inputs.

Configuration	Logic Input Power Supply Source	Digital Sensor
Configuration no. 1	Inside the LV compartment	Inside the LV compartment
Configuration no. 2	Inside the LV compartment	Outside the LV compartment, isolated
Configuration no. 3	Inside the LV compartment	Outside the LV compartment, connected to ground
Configuration no. 4	Outside the LV compartment	Outside the LV compartment

Each configuration is illustrated in the following pages by a simple electrical diagram.

Configuration No. 1: The digital sensor is inside the LV compartment

The characteristics of this configuration are:

- The supply source (isolated) is placed inside the MV cubicle.
- The digital sensor is placed inside the MV cubicle.

This configuration typically reflects connection of a Sepam logic output to a Sepam logic input, and involves all the logic inputs and outputs remaining within the perimeter delimited by the MV cubicle.

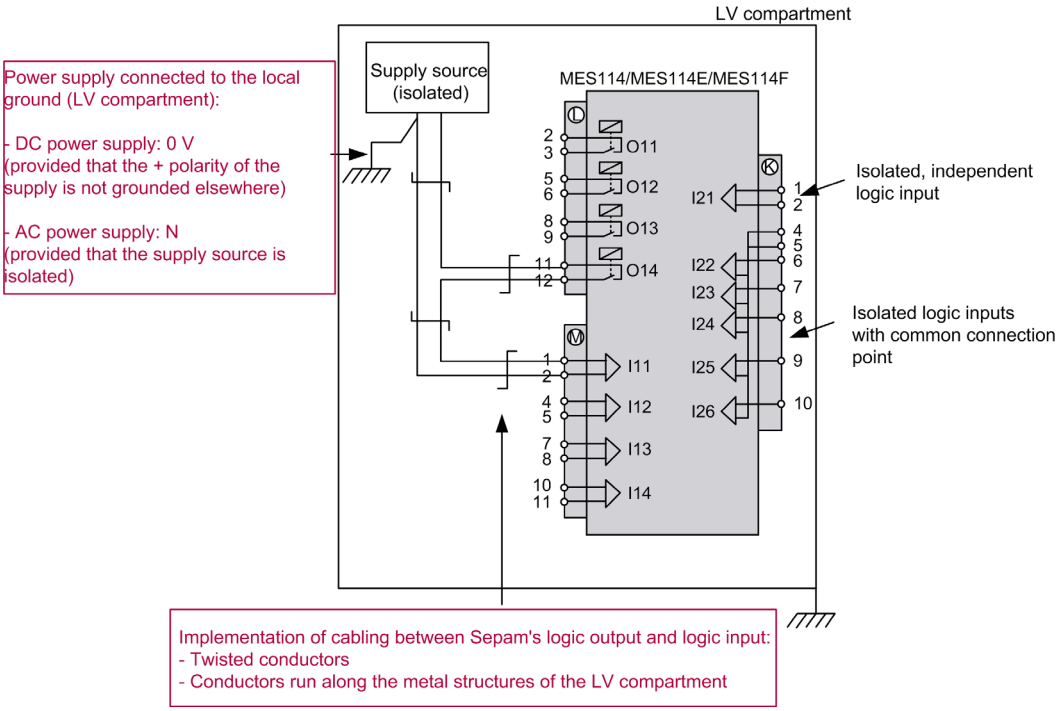

Configuration No. 2: The digital sensor is placed outside the LV compartment and is isolated

The characteristics of this configuration are:

- The supply source (isolated) is placed inside the MV cubicle.
- The digital sensor is remote from the MV cubicle and is totally isolated.

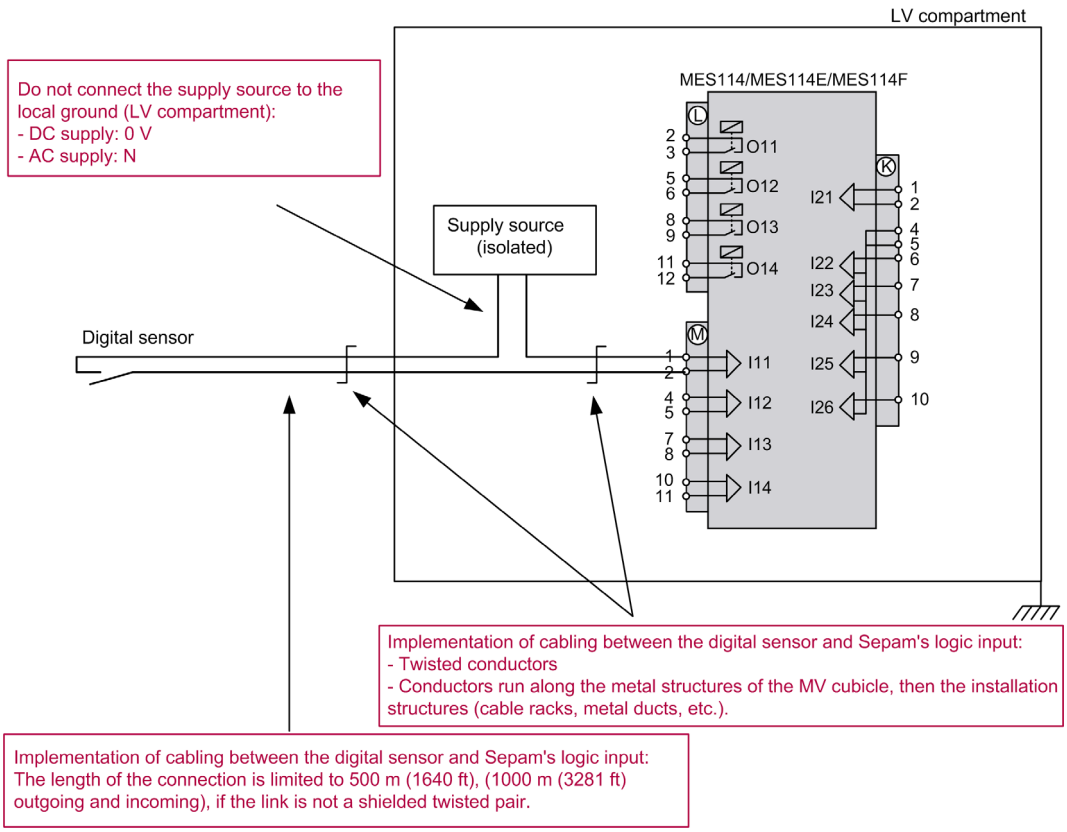

By not grounding the supply source (0 V or N), data is always available, even in the event of a ground fault on one of the electrical conductors connected to the digital sensor.

However, if it becomes necessary to earth the power supply, check that the power supply is only earthed at a single point, to avoid any circulation of current.

Configuration No. 3: The digital sensor is outside the LV compartment and is grounded or earthed

The characteristics of this configuration are:

- The supply source (isolated) is placed inside the MV cubicle.
- The digital sensor is remote from the MV cubicle and is grounded or earthed.

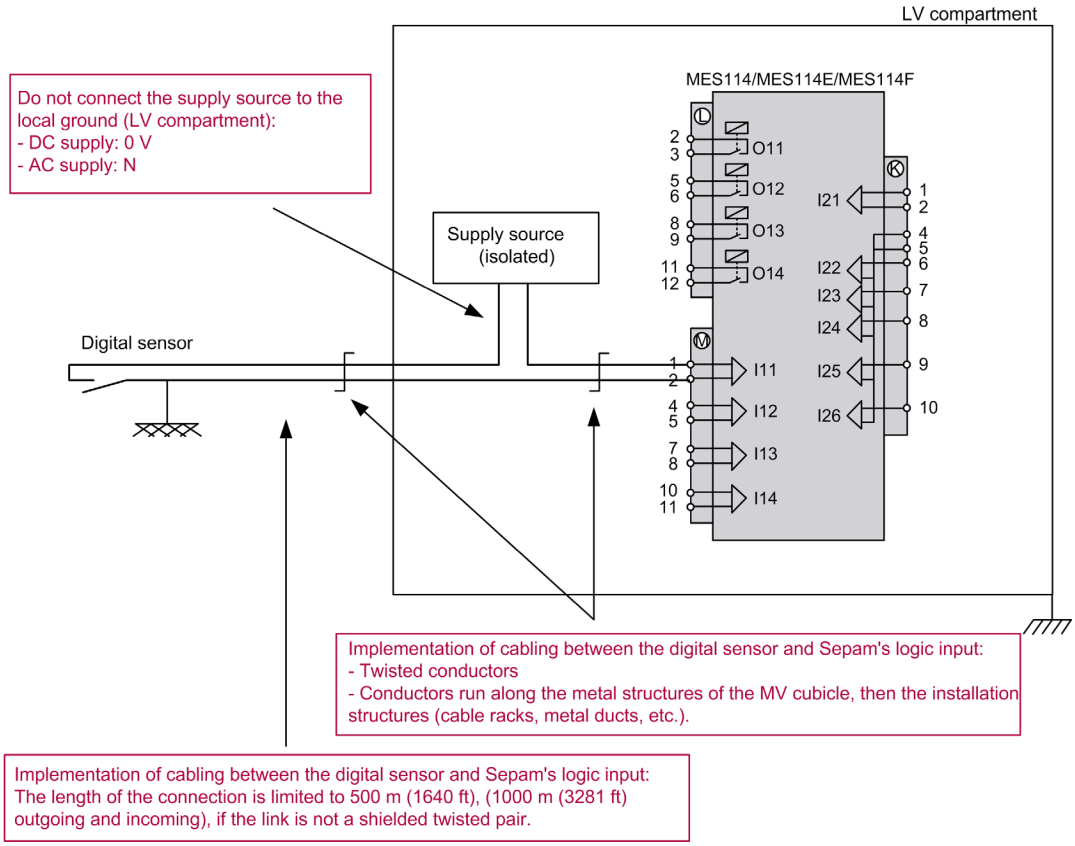

Not connecting the supply source (0 V or N) to ground avoids the circulation of disturbing currents in the logic input's electrical conductors. This current is liable to affect the logic input's operation.

Configuration No. 4: The digital sensor and its supply source are outside the LV compartment

The characteristics of this configuration are:

- The supply source is placed outside the MV cubicle.
- The digital sensor is remote from the MV cubicle.
- The digital sensor (or supply source) is grounded or earthed.

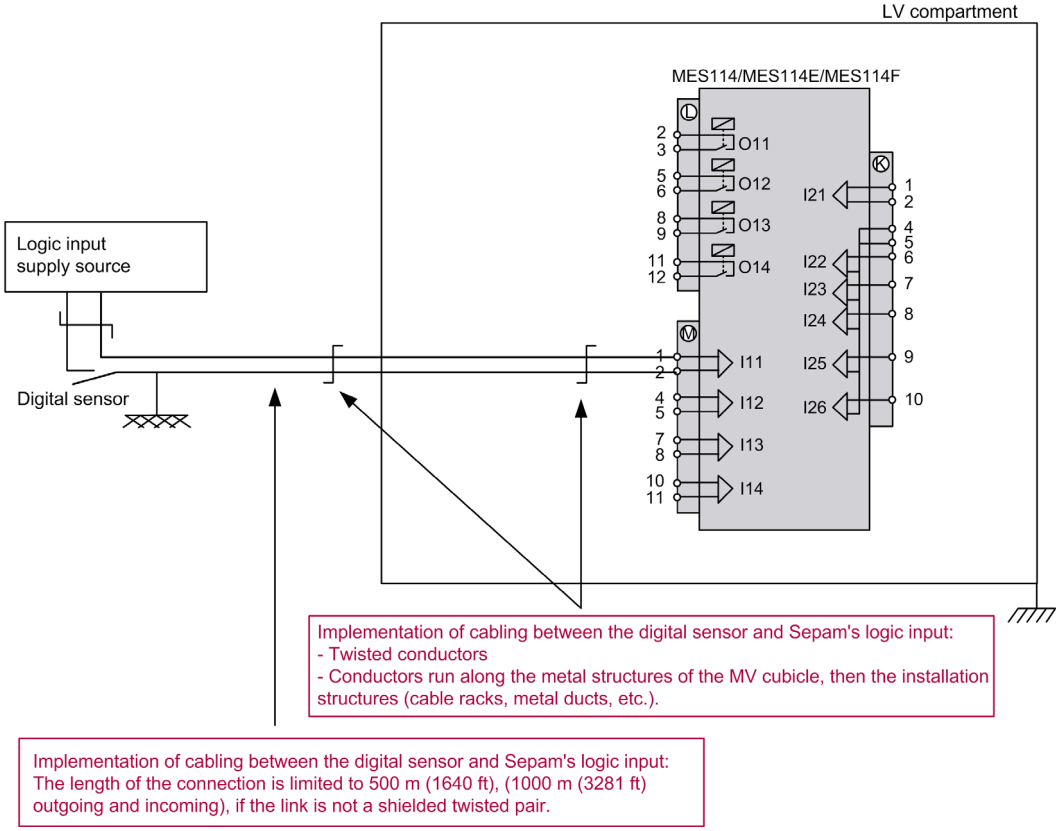

Implementation of cabling between the digital sensor and Sepam's logic input:
The length of the connection is limited to 500 m (1640 ft), (1000 m (3281 ft) outgoing and incoming), if the link is not a shielded twisted pair.

Supply Source Dedicated to Isolated Logic Inputs

An isolated logic input is often used to acquire data from a non-isolated, remote digital sensor.

The use of isolated logic inputs calls for a few preliminary installation precautions, described in the example below.

In the case of the diagram below, the isolated, independent logic inputs I11 and I14 acquire the data supplied by the digital sensors. The digital sensors are remote, non-isolated and come from different zones of the installation. The supply source is common to logic inputs I11 and I14.

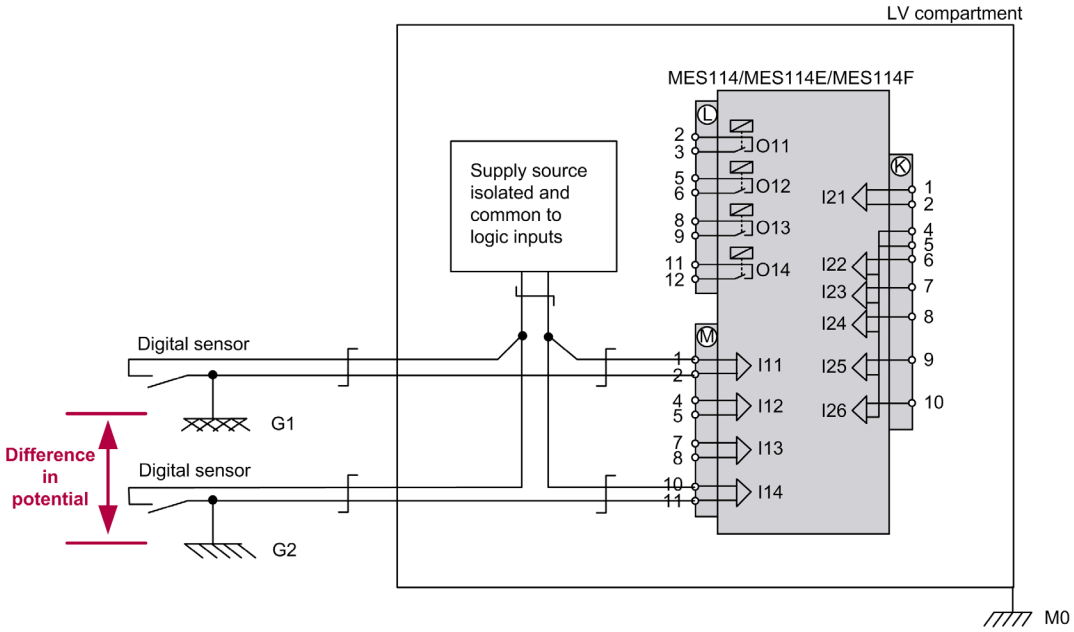

With this diagram, if there is no equipotential bonding, in the event of a ground fault in zone G1 or G2, there may be a difference in potential between local ground G1 and local ground G2. This can cause the circulation of disturbing current which flows back to the supply source common to the logic inputs. Depending on the impedance of the wire connections used, this current is then converted into differential mode voltage detected by the logic input. This may result in logic input operating problems.

To avoid malfunctions resulting from a supply source common to several logic inputs, the supply source for any isolated logic input must be completely dedicated to this input, as illustrated in the diagram below.

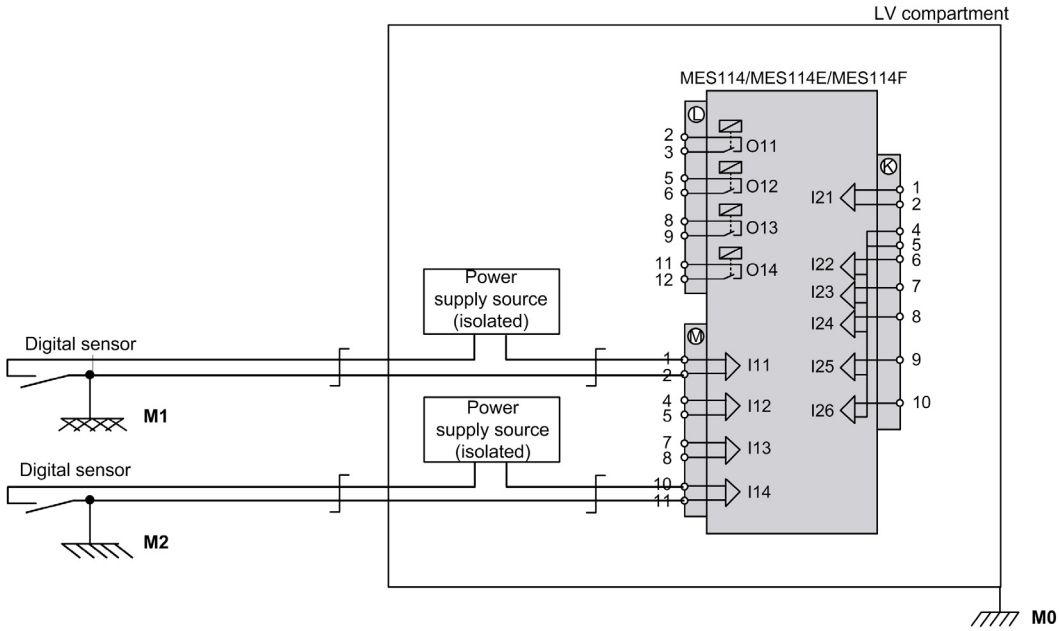

Logic Outputs

Introduction

Sepam has isolated logic outputs.

The user can use these logic outputs as he wishes or they may be assigned to a predefined application (e.g. MV circuit breaker coil command).

Logic outputs consist of a dry contact supplied by a volt-free electromechanical relay. The load controlled by a logic output requires an external power supply source (DC or AC).

Types of Sepam Logic Output

Depending on the Sepam model, two types of logic outputs are available to the user:

- Logic outputs dedicated to control. These outputs are used mainly to send commands to the MV breaking device.
- Logic outputs dedicated to indication. These outputs are generally used to transfer data.

Sepam Model	Logic Outputs Dedicated to Control	Logic Outputs Dedicated to Indication
Sepam series 10	O1, O2, O3, O4	O5, O6, O7
Sepam series 20	O1, O2, O11, O3 since 2008	O3, O4, O12, O13, O14
Sepam series 40	O1, O2, O11, O3 since 2008	O3, O4, O12, O13, O14
Sepam series 80	O1, O2, O3, O4, Ox01	O5, O6, Ox02 to Ox06
Sepam 2000	No distinction between logic outputs	

The rated current and breaking capacity of the logic outputs dedicated to control are higher than those of the logic outputs dedicated to indication. The service life of the electromechanical relays and correct Sepam operation depend on correct use of the logic outputs.

The surfaces of the logic output relay contacts need to be cleaned. Circulation of a minimal current in the contacts is recommended to destroy the oxides that may in time form on the surface of the contacts.

A logic output initially dedicated to controlling a power load can be used to control a Sepam relay logic input. In doing this, the output must never be used to break a strong current.

Switching of a several-Amp current destroys the thin layer of gold deposited on the electromechanical relay contacts. When the deposit is destroyed, the initial ohmic resistance of the relay contact increases and this results in uncertain electrical contacts with low currents.

Cabling Recommendations

The electrical conductors connected to the logic outputs are held in the same strand, twisted if possible, to avoid the creation of cabling loops.

CAUTION
HAZARD OF IMPROPER OPERATION When connecting the logic outputs: ● Do not form large cabling loops in the various power supplies ● Do not short-circuit any of the galvanic insulation **Failure to follow these instructions can result in equipment damage.**

The electrical conductors connected to Sepam's logic outputs are run along the metal structures of the MV compartment, and then the LV compartment. Running them along the metal structures reduces ground loops.

Sepam Model	Characteristics of Logic Output Conductors
Sepam series 10 Sepam series 20 Sepam series 40 Sepam series 80	Twisted two-wire link 1 conductor per terminal, 0.2 to 2.5 mm² max. (AWG 24 to AWG 12) depending on the current consumed by the load. **The dielectric strength of the various components inserted in the connection (conductors, intermediate terminal blocks, etc.) must be greater than the dielectric strength of the Sepam input (i.e. 2 kVrms).**
Sepam 2000	Twisted two-wire link 1 conductor per terminal, 2.5 mm² max. (AWG 24 to AWG 12) depending on the current consumed by the load. **The dielectric strength of the various components inserted in the connection (conductors, intermediate terminal blocks, etc.) must be greater than the dielectric strength of the Sepam input (i.e. 2 kVrms).**

Example of Cabling

The characteristics of this cabling configuration are:

- The supply source is placed inside the MV cubicle.
- The load, supplied and controlled from a Sepam logic output, is at a distance from the MV cubicle.

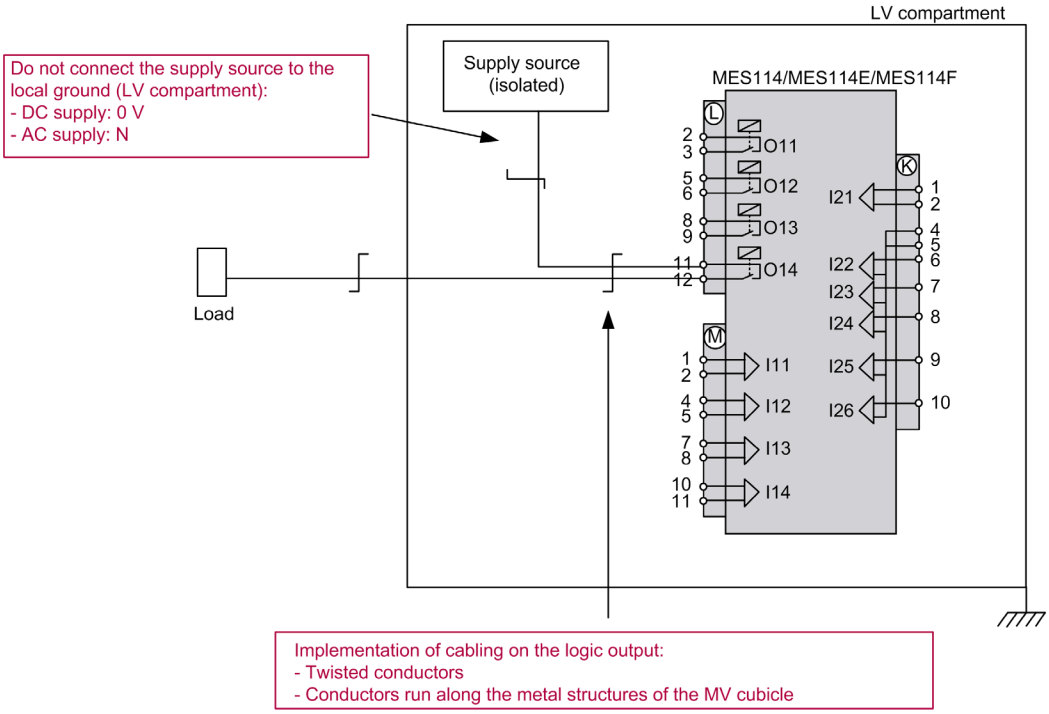

Not grounding the supply source (0 V or N) results in availability of the function, even in the event of a ground fault on one of the electrical conductors connected to the load.

However, if it becomes necessary to earth the power supply, the power supply should only be earthed at a single point, to avoid any circulation of current.

Inductive Load Overvoltage Limitation Devices

The loads controlled by Sepam logic outputs are highly diverse:
- Contactor coil
- Electromechanical relay coil
- LED
- Sepam logic input, etc.

The load may be installed in the LV compartment or outside the MV cubicle.

Special attention must be paid to the control of inductive type loads. All inductive loads (e.g. contactor coil) cause overvoltage. Restoration of the energy stored by a contactor coil, when the coil circuit opens, results in overvoltage across the terminals of the coil. This overvoltage, which may be energizing, is liable to disturb electronic equipment.

It is highly advisable to use a transient voltage suppressor at the terminals of this type of load since the transient generated will radiate onto nearby electronic devices (protection relay, metering unit, communication device, etc.) as well as nearby cubicles and circuits.

There is a risk that these will be disturbed, even if they comply with electromagnetic compatibility standards (IEC 60255-22 and IEC 61000-4 EMC), because these transients cause much more disturbance than the examples in the standards. The electromagnetic compatibility rules also require disturbances to be limited at source.

Some transient voltage suppressors are described below:
- Freewheel diode (on DC coil only)
- RC circuit
- Varistor

Freewheel Diode (DC Coil Only)

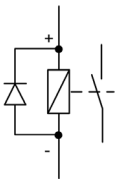

The characteristics of this device are:
- Reverse voltage withstand twice the maximum supply voltage or higher
- Positive-sequence current twice the maximum current consumed by the output relay or higher

Example of voltage measured at the terminals of an auxiliary relay supplied at 110 V DC:

No freewheel diode with very high, very fast positive transient and very wide negative overshoot:

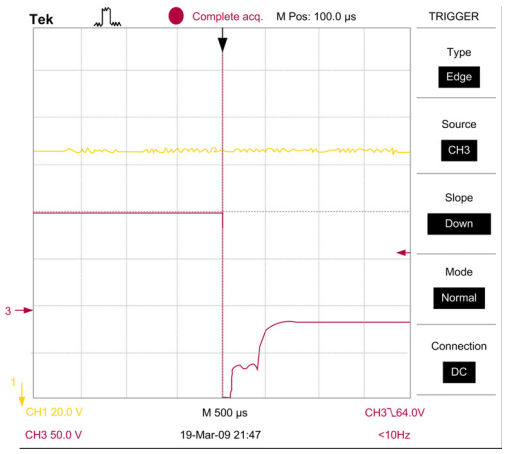

With freewheel diode:

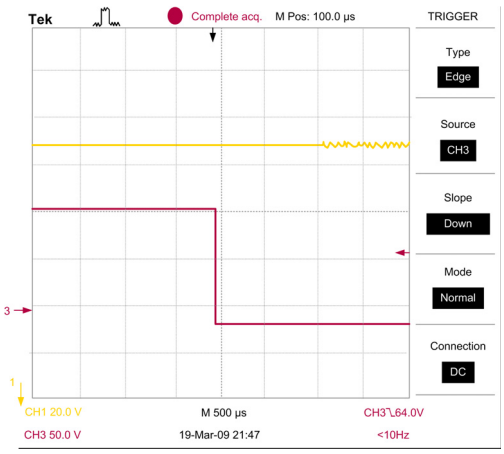

RC Circuit in Parallel on the Coil (AC or DC Coil)

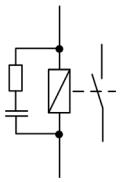

We recommend use of the accessory offered by the relay manufacturer.

RC Circuit in Parallel on the Control Contact (AC or DC Coil)

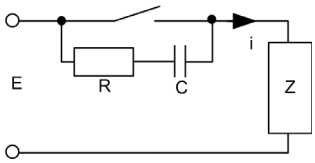

An RC circuit is made up of a resistor R and class Y capacitor C.

Generally speaking, we can work on the basis of the following criteria:

- R = E/i
- The value of C given in µF equals the value of i given in A (e.g. if i = 2 A, then C = 2 µF)

If the current is not known, use a 0.1 µF capacitor. The capacitor's withstand voltage will be 1.5 times the voltage E or higher.

Sepam relays do not incorporate this type of protection device for the following main reasons:

- Incompatibility with UL standards: a short-circuit in these components would cause a short-circuit in the power supply and make it impossible to perform maximum temperature tests (risk of flame/fire).
- Tripping problems: Failure of these components involves a risk of nuisance tripping or failure to trip in the event of electromagnetic interference without possibility of detection by the Sepam relay.
- Incompatibility of electrical constraints: the components in this type of surge limiter should be calculated according to the characteristics of the coil to be protected (voltage, power, AC/DC, etc.) whereas the Sepam has to cover a wide range of auxiliary voltages.

Varistor (AC or DC Coil)

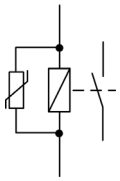

The varistor should be sized to suit the particular case according to the following:

- The application
- The voltage
- The energy to be dissipated.

Specific Case of the Circuit Breaker Trip Coil

When the Sepam relay sends a trip order, the O1 output contact closes and then opens after a time delay (in the case of a shunt trip coil). During activation the coil stores energy which has to be released when O1 opens and interrupts the circuit. This energy generates high-voltage disturbances, which are both powerful and high-frequency, and creates an arc at the terminals of O1's contact.

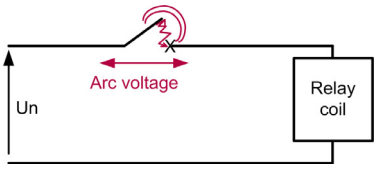

A circuit breaker position contact is usually placed in series with the coil in the circuit breaker control block.

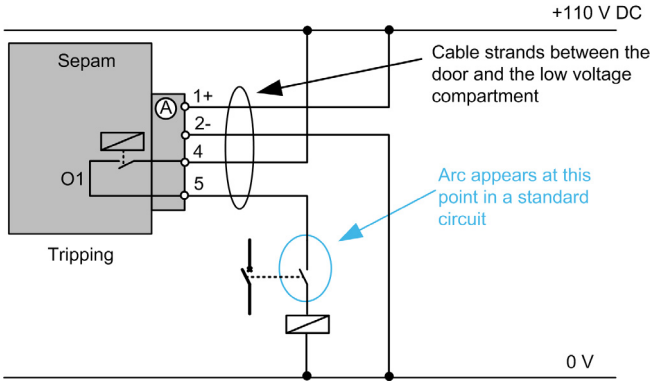

In this common case, the arc caused by interrupting the trip coil circuit appears at the terminals of this contact, which opens before output O1.

The disturbance is then confined to the cubicle medium-voltage compartment and does not circulate in the wiring going to the protection relay, thus avoiding radiation into the low-voltage compartment.

Connections for the Logic Discrimination Function

Introduction

The logical connections used for logic discrimination are made up of indication relay outputs and logic inputs.

Main Factors in Sizing a Connection

The parameters to be taken into account when defining the size of a logic connection are as follows:
- Minimum operating voltage
- Maximum operating current
- Maximum trip threshold voltage
- Minimum cable cross-section
- Maximum connection length

In some cases, electromagnetic interference may affect the connection. Precautions should be taken to minimize such effects.

Calculation of the Maximum Theoretical Length of the Connection

Maximum connection resistance = (minimum operating voltage - maximum trip threshold voltage)/maximum operating current

Where:
- Minimum operating voltage: 24 V DC - 20% = 19.2 V
- Maximum trip threshold voltage: 14 V
- Maximum operating current: 3 mA

i.e. maximum connection resistance = 1.73 kΩ

Maximum connection length = maximum connection resistance/resistance per meter for the minimum cross-section of the connection wire used

Where:
- Minimum cable cross-section: 0.2 mm² (AWG 24)
- Resistance per meter for the minimum cross-section of the connection wire used: 86.4 mΩ/m

i.e. maximum connection length = 10,000 m outgoing and incoming (6 mi)

These theoretical results are not realistic since it is necessary to take account of environmental and installation conditions which were assumed here to be perfect.

Other Factors to be Taken into Account

In addition, the following factors should be taken into account:
- The signal propagation time when there is a change of state
- The connection's lineic capacitance with respect to earth

The propagation time for a 5000 m (3 mi) connection is 33 µs (propagation time of 6.6 ns/m). That means that reading the change of state must take place with a longer time. Generally speaking, a factor greater than or equal to 3 should be used, or a time greater than or equal to 100 µs.

The connection's lineic capacitance with respect to the earth increases with the length of the connection . The average value is in the range of 10 to 50 pF/m depending on the installation method. The capacitance for a 5000 m (1640 ft) connection is in the range of 50 to 250 nF.

This stray capacitance may become loaded with more or less high voltage, according to various factors such as coupling with other cables and the frequency bandwidth of coupled disturbance. The lower the supply voltage on the contacts, the more operating problems are caused.

Connection via Twisted Pair

To minimize operating problems, it is advisable to create the connection with a twisted pair, taking account of the following points:
- The outgoing and incoming twisted pair connection can minimize the differential mode loop surface.
- The connection should be run away from all disturbing cabling.
- The power supply reference should only be earthed at a single point (unless otherwise necessary), to avoid any circulation of uncontrolled current (common impedance = source of EMC problems).

If these conditions are not met, the length of the connection should be limited to a value less than or equal to 500 m (1804 ft).

Connection via Shielded Twisted Pair

When the run for this connection is not controlled (separation distance from disturbing cables), a shielded twisted pair must be used. In such cases, the connection shielding must be connected to ground at both ends. This means that the shielding earthing and bonding connections must be equipotentially bonded (same earthing system).

This situation is not likely to occur if the Sepam and installation earthing systems are of the TN-C or TNC-S type. In such cases, 50 Hz currents and high harmonic currents can circulate on the connection shielding and make it vulnerable, or even destroy the cable in the event of a phase-to-earth fault.

Connection via Pair with Surge Suppressors

Similarly, the IT earthing system may cause overvoltage problems. In such cases, surge suppressors should be provided to maintain a level that is compatible with the connection withstand (withstand of the cable, associated connectors and Sepam inputs/outputs).

Galvanically Insulated Connection

Should it be impossible to control all these parameters, only a galvanically-insulated connection (galvanic insulation, fiber optic) can ensure correct operation.

Example of a Problematic Application

Either:

- 2 Sepam series 20s or series 40s
- Equipped with an MES114F input/output module (input voltage: 220-250 V AC, limit input voltage at state 0: 48 V AC or less)
- Linked by a 1400 m (4500 ft) cable, incoming and outgoing, connecting a Sepam logic output to a logic input on the other Sepam

When the logic output relay contact is open, a voltage of 160 V AC is present on the logic input which is therefore continuously activated!

In this example, connection of a 470 nF capacitor in parallel on the input can reduce the residual voltage to less than 48 V AC when the contact is open and to have full voltage when it is closed. The system therefore operates correctly again, but at the cost of permanent consumption and a risk of additional unmonitored failure. The capacitor should be class X2 with a rated voltage of at least 630 V AC.

3.4 Accessories

What's in this Section?

This section contains the following topics:

MET148-2 Temperature Sensor (RTD) Module

Presentation

The MET148-2 module can be used to connect 8 temperature sensors of the same type:

- Pt100, Ni100 or Ni120 type sensors
- 3-wire sensors

Example of Use of the MET148-2 Module

The diagram below illustrates use of an MET148-2 with a Sepam series 20:

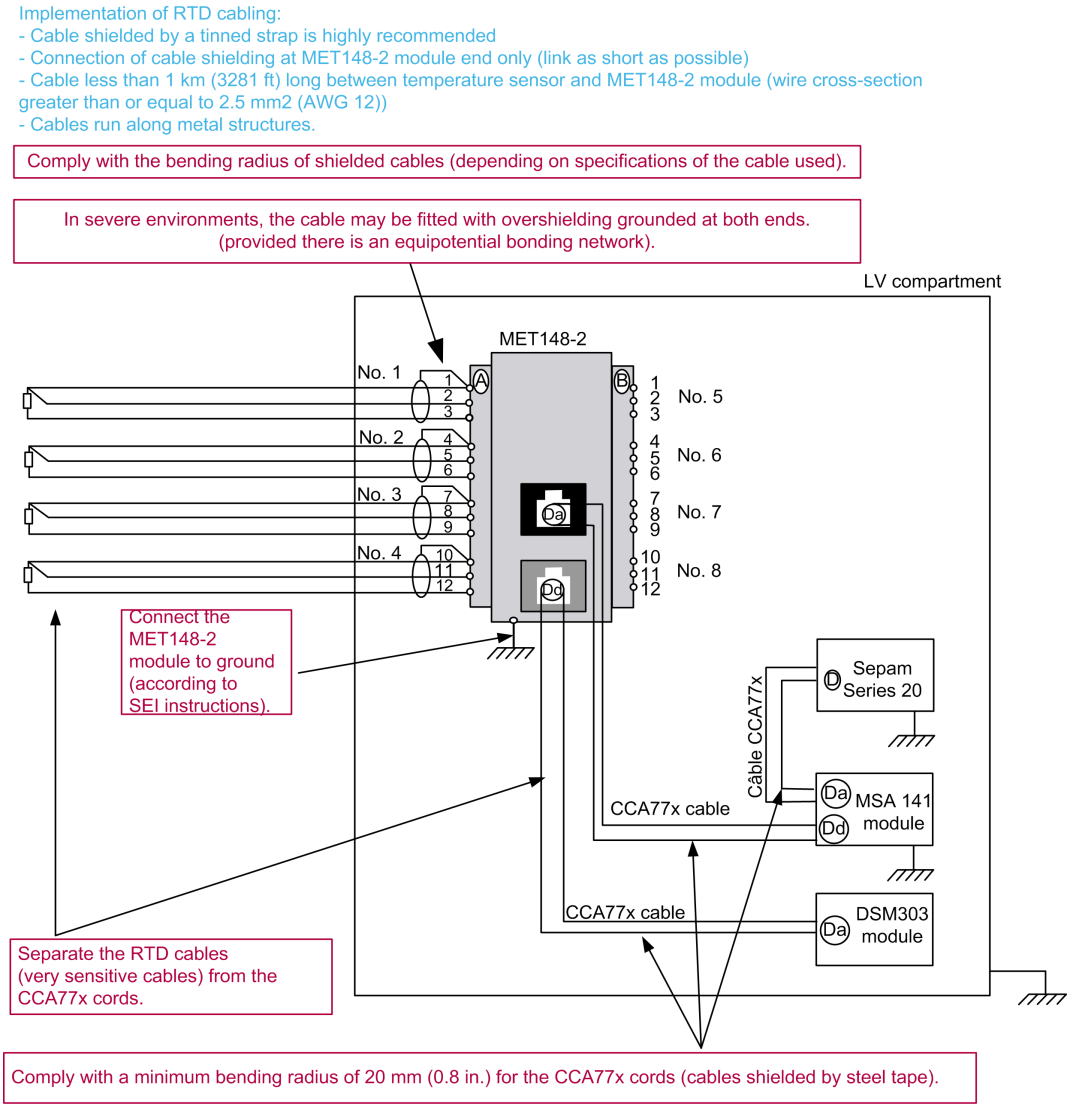

Equipotential Bonding

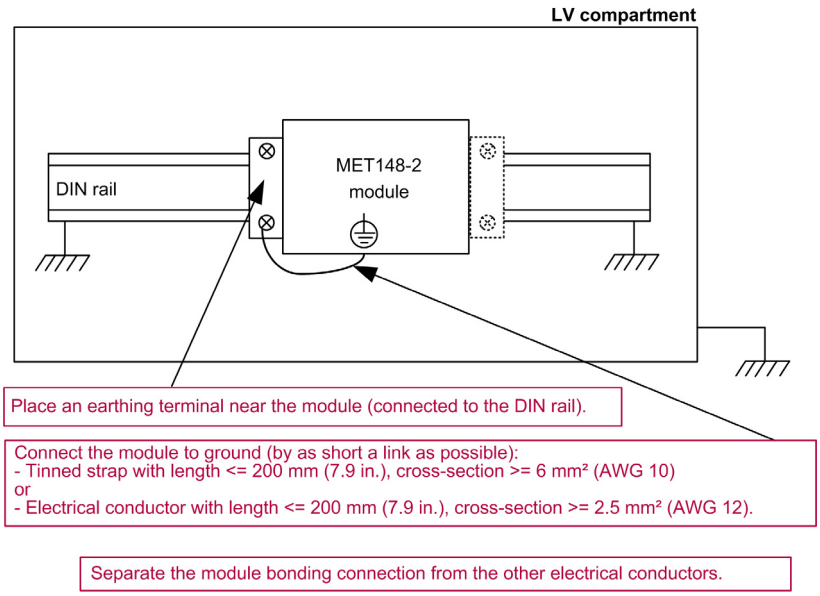

Place an earthing terminal near the module (connected to the DIN rail).

Connect the module to ground (by as short a link as possible):
- Tinned strap with length <= 200 mm (7.9 in.), cross-section >= 6 mm² (AWG 10)
or
- Electrical conductor with length <= 200 mm (7.9 in.), cross-section >= 2.5 mm² (AWG 12).

Separate the module bonding connection from the other electrical conductors.

MSA141 Analog Output Module

Presentation

The MSA141 module converts one of the Sepam measurements into an analog signal:

- Measurement to be converted selected by parameter setting
- 0-10 mA, 4-20 mA, 0-20 mA analog signal according to parameter setting
- Analog signal scaled by setting the minimum and maximum values of the converted value.

Example of Use of the MSA141 Module

The diagram below illustrates use of an MSA141 module with a Sepam series 20:

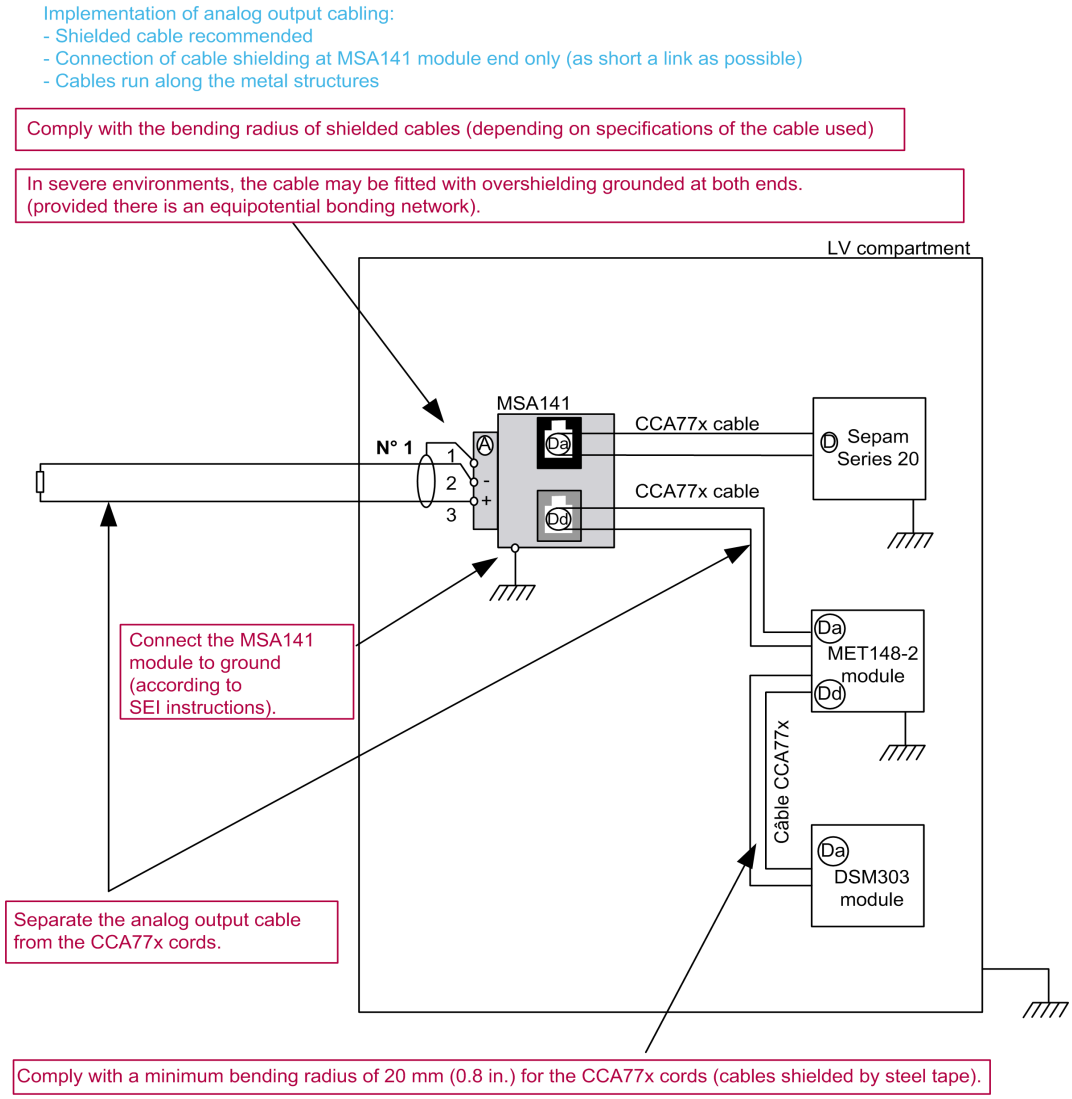

Equipotential Bonding

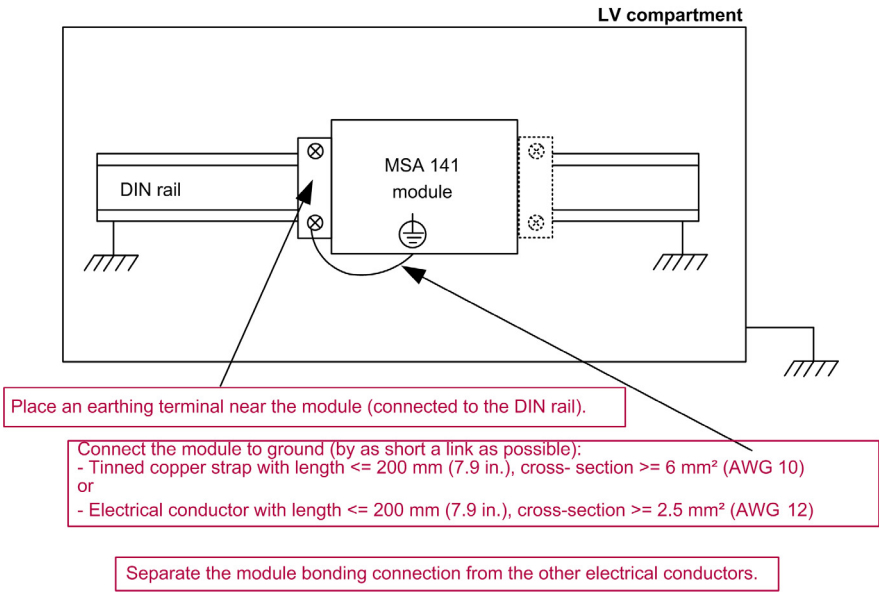

Separate the module bonding connection from the other electrical conductors.

RS 485 Communication Accessories

Presentation

The Sepam range of protection relays includes the communication function.

This means that the Sepam relays can be connected to any RS 485 2-wire (or 4-wire) communication network and exchange all the data necessary for centralized management of the electrical installation by a supervisor, using the Modbus master/slave protocol.

To limit cabling errors, the cause of most problems encountered in the implementation of communication networks, and to limit network sensitivity to environmental disturbance, a set of accessories is available to make it simple to connect a Sepam relay to an RS 485 network.

List of Communication Accessories

The Sepam relay can be associated with accessories supported by the Sepam relay or remote from the Sepam. The optional accessories are as follows:

Sepam Accessory References	Sepam Accessories
59642	ACE949-2 2-wire RS 485 network interface
59643	ACE959 4-wire RS 485 network interface
59644	ACE937 fiber optic interface
59648	ACE909-2 RS 232/RS 485 converter
59649	ACE919CA RS 485/RS 485 converter
59650	ACE919CC RS 485/RS 485 converter
59723	ACE969TP-2 2-wire RS 485 multi-protocol interface

The main RS 485 communication accessories that can be associated with a Sepam relay are described below:

ACE949-2 2-Wire RS 485 Network Interface

The ACE949-2 interface performs the following functions:

- Electrical interface between Sepam series 20/40/80 and a 2-wire RS 485 physical layer communication network
- Main network cable branching box for the connection of a Sepam relay with a CCA612 cord

The ACE949-2 interface can be used for setting the parameters of the line-end impedance matching resistor in the 2-wire RS 485 network.

ACE959 4-Wire RS 485 Network Interface

The ACE949 interface performs the following functions:

- Electrical interface between Sepam series 20/40/80 and a 4-wire RS 485 physical layer communication network
- Main network cable branching box for the connection of a Sepam relay with a CCA612 cord

The ACE949 interface can be used for setting the parameters of the line-end impedance matching resistor in the 4-wire RS 485 network.

ACE969TP-2 2-Wire RS 485 Multi-Protocol Interface

The ACE969TP-2 interface is a multi-protocol communication interface for Sepam series 20/40/80.

It has two communication ports to connect a Sepam relay to two independent communication networks:

- The S-LAN (Supervisory Local Area Network) port to connect a Sepam relay to a communication network dedicated to supervision, using one of the following three protocols:
  - IEC 60870-5-103
  - DNP3
  - Modbus RTU

NOTE: The communication protocol is selected at the time of Sepam parameter setting.

- The E-LAN (Engineering Local Area Network) port, reserved for Sepam remote parameter setting and operation using the SFT2841 software

The ACE969TP-2 interface can be used for setting the parameters of the line-end impedance matching resistor in the 2-wire RS 485 network.

ACE937 Fiber Optic Interface

The ACE937 interface is used to connect Sepam series 20/40/80 to a star-type fiber optic communication system. This remote module is connected to the Sepam base unit by a CCA612 cord.

ACE909-2 RS 232/RS 485 Converter

The ACE 909-2 converter is used to connect a supervisor/central computer equipped with a V24/RS 232 serial port as standard to stations connected on a 2-wire RS 485 network.

The ACE 909-2 converter also provides a 12 V DC or 24 V DC supply for the distributed power supply of the Sepam ACE 949-2 or ACE 959 interfaces. This converter offers the possibility of setting the parameters of the 2-wire RS 485 network polarization and line-end impedance matching resistors.

ACE919CA (or ACE919CC) RS 485/RS 485 Converter

ACE919 converters are used to connect a supervisor/central computer equipped with an RS 485 serial port as standard to stations connected on a 2-wire RS 485 network.

ACE919 converters also provide a 12 V DC or 24 V DC supply for the distributed power supply of the Sepam ACE949-2 or ACE959 interfaces. These converters offer the possibility of setting the parameters of the 2-wire RS 485 network polarization and line-end impedance matching resistors.

Impedance Matching Resistors

150 Ω line-end resistors (Rc) are mandatory (one at each end of the communication network) to perform impedance matching of the communication line.

Two resistors are therefore required for a 2-wire RS 485 network (or 4 resistors for a 4-wire RS 485 network).

RS 485 Network Polarization

Polarization of the communication network results in a continuous flow of current in the network, putting all the receivers in idle state when no transmitter has been validated.

The network is polarized by connecting the (L+) wire to the 0 V and the (L-) wire to the 5 V, by means of two 470 Ω polarization resistors (Rp).

The network should only be polarized on one line to avoid unwanted transmission.

For 4-wire RS 485 communication networks, it is necessary to polarize both lines, transmitting and receiving.

Equipotential Bonding

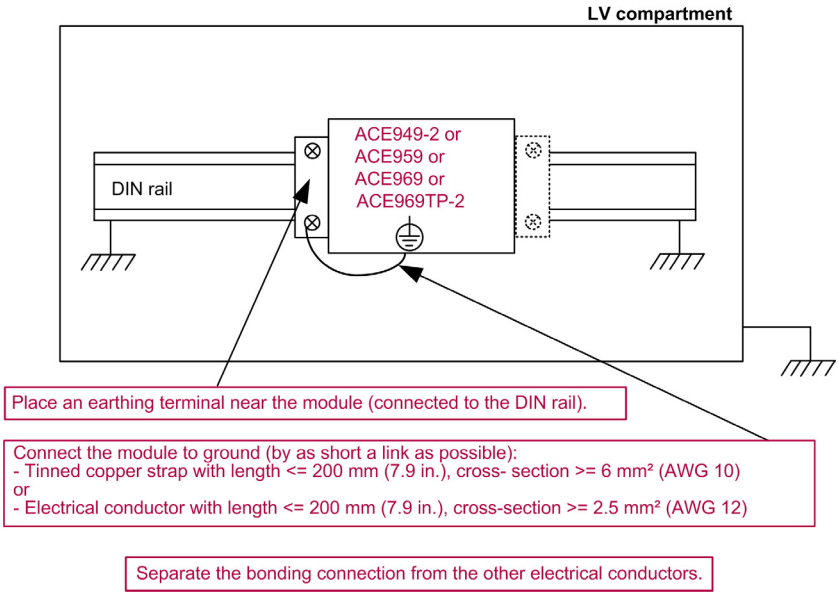

Example of an Installation Including Equipment Communicating in the Same Building

Assumptions:

- Moderately-sized electrical installation
- Implementation of a 2-wire RS 485 communication network (the 12 V DC or 24 V DC distributed power supply is provided by the ACE 909-2 converter)
- Remote supervision of the installation

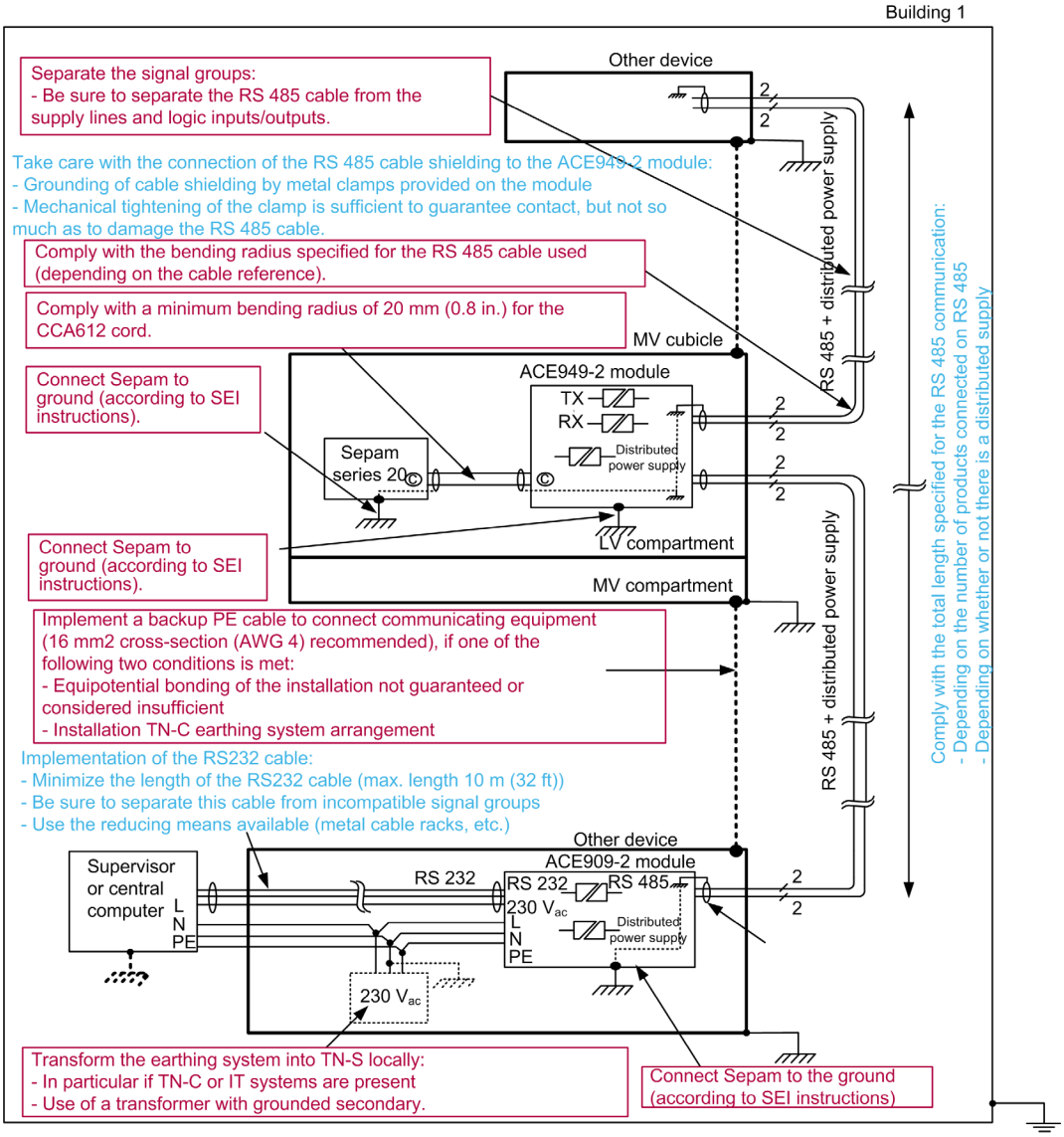

NOTE: Lorsque l'installation électrique comporte un schéma de liaison à la terre TN-C, des courants 50 Hz et des courants harmoniques de rang impairs (H3, H5, etc.) circulent de façon permanente :

- In the cable shielding if it is earthed at both ends
- In the communication network's 0 V link if it is earthed

Example of an Installation Including Equipment Communicating Between Two Neighboring Buildings:

Assumptions:

- Moderately-sized electrical installation
- Implementation of a 2-wire RS 485 communication network

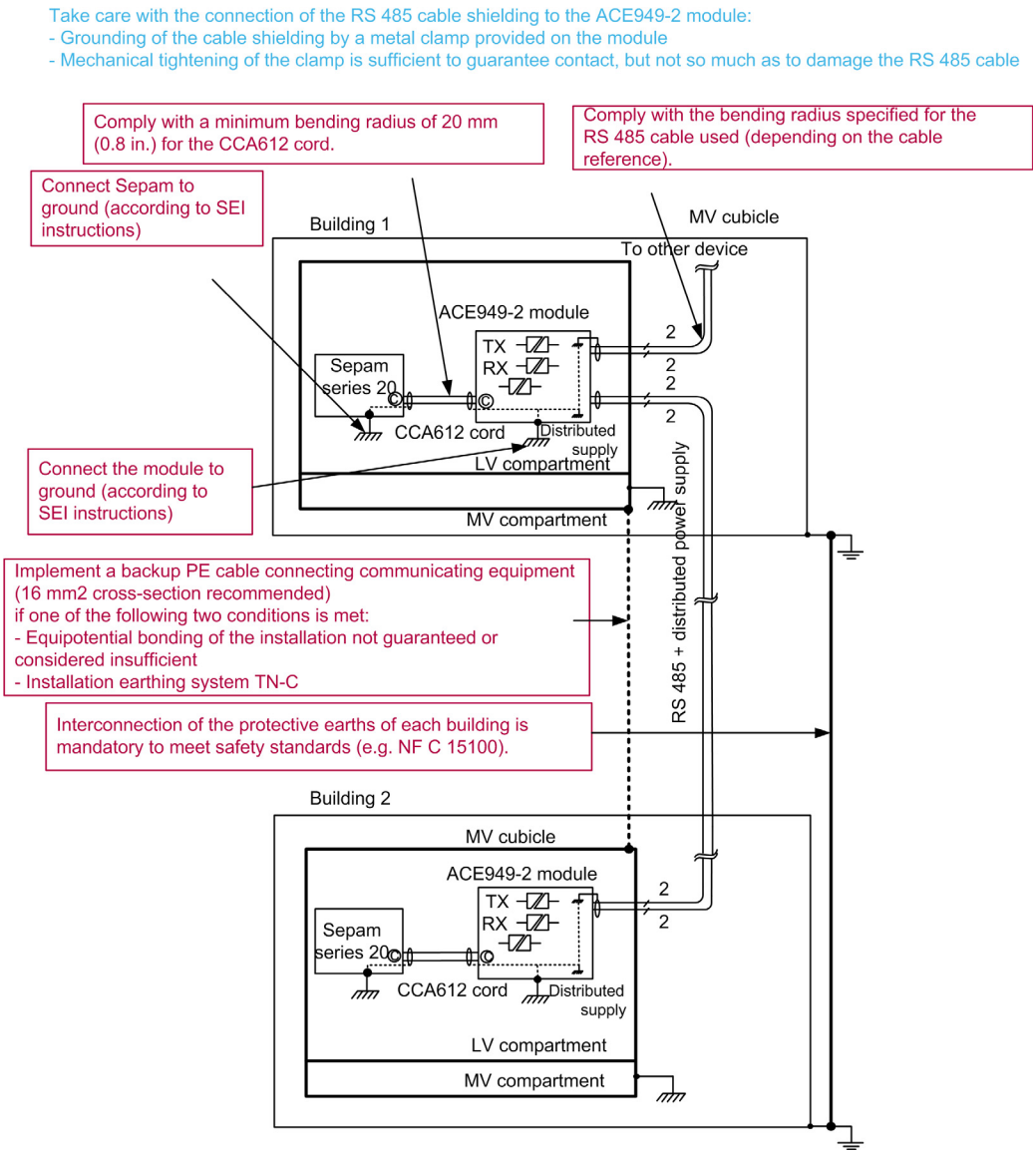

NOTE: Whenever installations are not equipotential, or cover a wide area or include IT or TN-C earthing systems, use of a fiber optic link is strongly recommended.

Example of an Installation Including Equipment Communicating Between Two Buildings Some Distance Apart:

Assumptions:

- Electrical installation with little equipotentiality, covering a wide area, using IT or TN-C earthing systems
- Implementation of a fiber optic link communication network (Silica, 820 nm), with no exposed metal parts

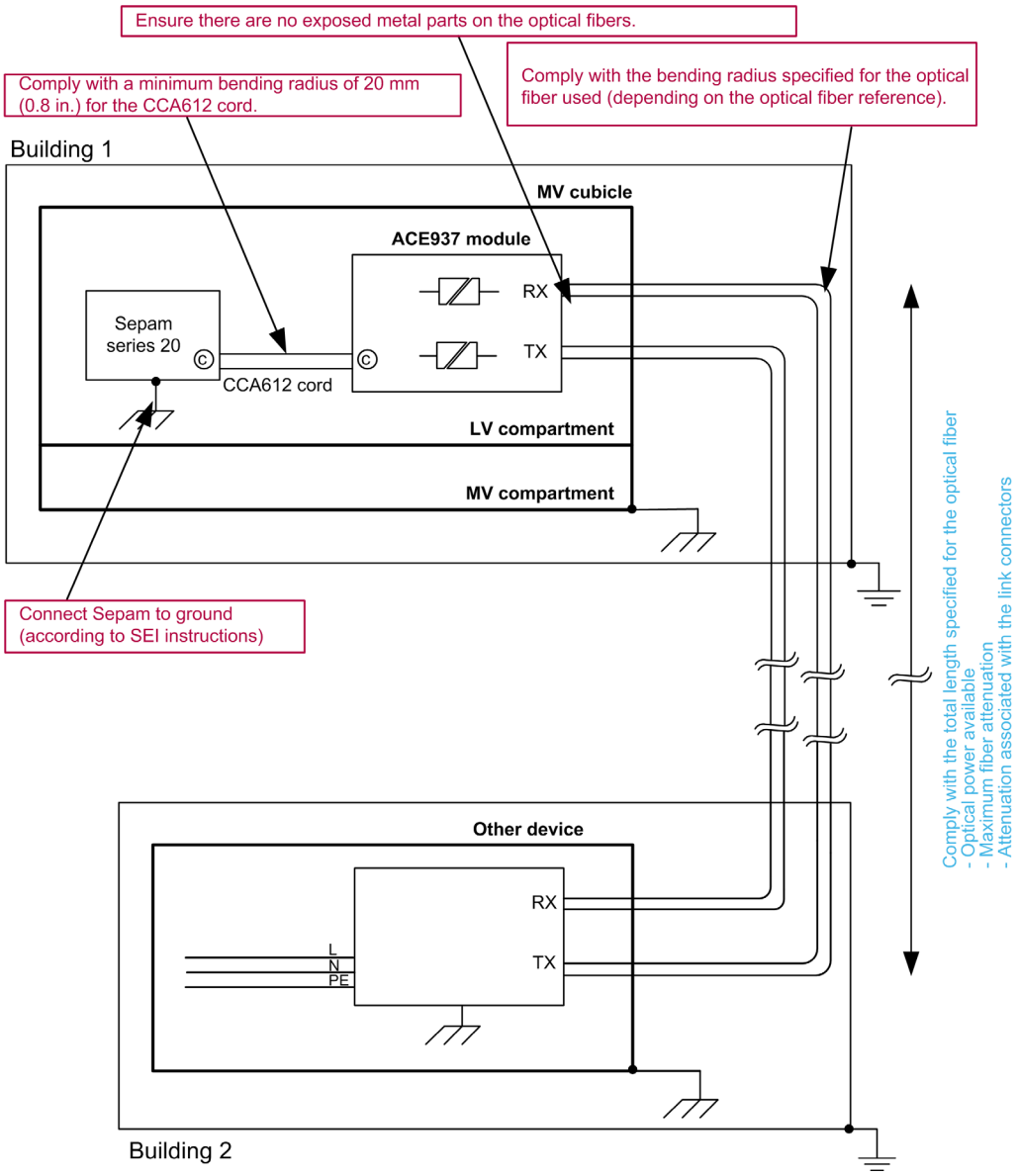

Glossary

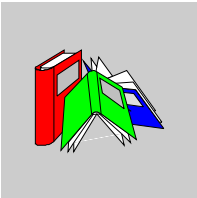

C

Common Mode (also Called Parallel, Longitudinal or Asymmetric mode)
Currents circulating in the same direction on all the conductors of a wire connection.

D

Dependability
The ability of an entity to fulfill one or more required functions in given conditions. The concepts of reliability, maintainability, availability and safety are associated with dependability.

Differential Mode (also Called Normal, Serial or Symmetric Mode)
Currents circulating in phase opposition on two conductors of a wire connection.

Downgrading (Operation)
Unwanted deviation in the operating characteristics of a mechanism, device or system compared to the expected characteristics.

E

Earth Electrode (NF C 15 100)
Conductive part, which may be incorporated in the ground or in a particular conductive medium, such as concrete or coke, in electrical contact with the earth.

Earthing Terminal (IEC 60050-195-02-31)
A terminal with which an equipment item or device is fitted, and which is intended to be electrically connected to the earthing installation.

Electromagnetic Compatibility (or EMC)
The ability of a mechanism, device or system to operate in its electromagnetic environment in a satisfactory way, without itself producing any electromagnetic interference that is intolerable to everything in that environment.

Electromagnetic Environment
Set of electromagnetic phenomena existing in a given location.

Electromagnetic Interference
Electromagnetic phenomenon liable to create operating problems in a mechanism, device or system, or to have a detrimental effect on living or inert matter.

Equipotential Bonding (NF C 15 100)

Electrical connection which puts exposed conductive parts and conductive elements at the same potential, or similar potentials.

Equipotential Bonding Connection

Equipotential bonding of two grounds.

Equipotential Bonding Terminal (IEC 60050-195-02-32)

A terminal with which an equipment item or device is fitted, and which is intended to be electrically connected to the equipotential bonding network.

F

Failure

Ceasing of an entity's ability to perform a required function.

Functional Earthing Conductor (IEC 60050-195-02-15)

Earthing conductor used for functional earthing.

G

Ground (NF C 15 100)

Conductive part of equipment, liable to be touched, and which is not energized, but may become energized when the main insulation is faulty.

Ground Loop Area

Area consisting of an active conductor and a ground.

I

Immunity (to Interference)

The ability of a mechanism, device or system to operate without downgraded quality in the presence of electromagnetic interference.

Installation (EMC Context)

Combination of devices, components and systems assembled and/or mounted in a given zone.

Inter-Ground Loop Area

Area between two ground conductors (contributes to the installation's equipotentiality by meshing the grounds).

L

Level (of a Quantity)

Value of a quantity evaluated in a specified way.

Level of Immunity

Maximum level of electromagnetic interference of a given type that can have an effect on a mechanism, device or system in a specified way, without downgrading operation.

Local Earth (NF C 15 100)

Part of the Earth in electrical contact with an earth electrode, whose electrical potential is not necessarily equal to zero.

P

PE Protective Earth conductor (NF C 15 100)

Conductor specified in certain protection measures against electric shocks and designed to be connected electrically to some of the following parts:

- Grounds
- Conductive elements
- Main earthing terminal
- Earth electrode
- Supply point connected to the earth or to an artificial neutral point

Protective Earthing (IEC 60050-195-01-11)

Action of earthing one or more points in a system, installation or device for safety purposes.

S

Susceptibility (Electromagnetic)

The inability of a mechanism, device or system to operate without downgrading in the presence of electromagnetic interference.

NOTE: Susceptibility may be interpreted as a lack of immunity.

System (EMC Context)

Combination of devices making up a unique functional unit, designed to be installed and used to perform one or more specific tasks.

Schneider Electric Industries SAS

35, rue Joseph Monier
CS 30323
F - 92506 Rueil-Malmaison Cedex
RCS Nanterre 954 503 439
Share capital 896 313 776 €

www.schneider-electric.com

As standards, specifications and designs change from time to time, please ask for confirmation of the information given in this publication.

Printed on recycled paper

Production : Assystem France
Publication / Publishing : Schneider Electric