SCADAPack 4000 Transmitters Models 4012, 4032 and 4102

Installation, Operation and Maintenance Setup Manual

2/24/2017

Schneider Electric

The information provided in this documentation contains general descriptions and/or technical characteristics of the performance of the products contained herein. This documentation is not intended as a substitute for and is not to be used for determining suitability or reliability of these products for specific user applications. It is the duty of any such user or integrator to perform the appropriate and complete risk analysis, evaluation and testing of the products with respect to the relevant specific application or use thereof. Neither Schneider Electric nor any of its affiliates or subsidiaries shall be responsible or liable for misuse of the information contained herein. If you have any suggestions for improvements or amendments or have found errors in this publication, please notify us.

All pertinent state, regional, and local safety regulations must be observed when installing and using this product. For reasons of safety and to help ensure compliance with documented system data, only the manufacturer should perform repairs to components.

Trademarks

Address

Schneider Electric
Telemetry & Remote SCADA Solutions
415 Legget Drive, Suite 101, Kanata, Ontario K2K 3R1 Canada
Direct Worldwide: +1 (613) 591-1943
Fax: +1 (613) 591-1022
Toll Free within North America: 1 (888) 267-2232
www.schneider-electric.com

Table of Contents

Index of Figures

Technical Support

Questions and requests related to any part of this documentation can be directed to one of the following support centers:

Technical Support: Americas, Europe, Middle East, Asia

Available Monday to Friday 8:00am – 6:30pm Eastern Time

Toll free within North America	1-888-226-6876
Direct Worldwide	+1-613-591-1943
Email	supportTRSS@schneider-electric.com

Technical Support: Australia

Inside Australia	1300 369 233
Email	au.help@schneider-electric.com

Safety Information

Important Information

Read these instructions carefully and look at the equipment to become familiar with the device before trying to install, operate, service, or maintain it. The following special messages may appear throughout this documentation or on the equipment to warn of potential hazards or to call attention to information that clarifies or simplifies a procedure.

The addition of this symbol to a Danger or Warning safety message indicates that an electrical hazard exists, which will result in personal injury if the instructions are not followed.

This is the safety alert symbol. It is used to alert you to potential personal injury hazards. Obey all safety messages that follow this symbol to avoid possible injury or death.

⚠DANGER

DANGER indicates a hazardous situation which, if not avoided, **will result** in death or serious injury.

⚠WARNING

WARNING indicates a hazardous situation which, if not avoided, **can result** in death or serious injury.

⚠CAUTION

CAUTION indicates a potentially hazardous situation which, if not avoided, **can result** in minor or moderate injury.

NOTICE

NOTICE is used to address practices not related to physical injury.

Please Note

Electrical equipment should be installed, operated, serviced, and maintained only by qualified personnel. No responsibility is assumed by Schneider Electric for any consequences arising out of the use of this material.

A qualified person is one who has skills and knowledge related to the construction and operation of electrical equipment and the installation, and has received safety training to recognize and

Before You Begin

Do not use this product on machinery lacking effective point-of-operation guarding. Lack of effective point-of-operation guarding on a machine can result in serious injury to the operator of that machine.

⚠ WARNING

EQUIPMENT OPERATION HAZARD

- Verify that all installation and set up procedures have been completed.
- Before operational tests are performed, remove all blocks or other temporary holding means used for shipment from all component devices.
- Remove tools, meters, and debris from equipment.

Failure to follow these instructions can result in death or serious injury.

Follow all start-up tests recommended in the equipment documentation. Store all equipment documentation for future reference.

Test all software in both simulated and real environments.

Verify that the completed system is free from all short circuits and grounds, except those grounds installed according to local regulations (according to the National Electrical Code in the U.S.A, for instance). If high-potential voltage testing is necessary, follow recommendations in equipment documentation to prevent accidental equipment damage.

Operation and Adjustments

The following precautions are from the NEMA Standards Publication ICS 7.1-1995 (English version prevails):

- Regardless of the care exercised in the design and manufacture of equipment or in the selection and ratings of components, there are hazards that can be encountered if such equipment is improperly operated.
- It is sometimes possible to misadjust the equipment and thus produce unsatisfactory or unsafe operation. Always use the manufacturer's instructions as a guide for functional adjustments. Personnel who have access to these adjustments should be familiar with the equipment

manufacturer's instructions and the machinery used with the electrical equipment.

- Only those operational adjustments actually required by the operator should be accessible to the operator. Access to other controls should be restricted to prevent unauthorized changes in operating characteristics.

Acceptable Use

SCADAPack controllers and expansion modules are intended for use in monitoring and controlling non-critical equipment only. They are not intended for safety-critical applications.

⚠WARNING

UNACCEPTABLE USE

Do not use SCADAPack controllers and expansion modules as an integral part of a safety system. These devices are not safety products.

Failure to follow these instructions can result in death or serious injury.

⚠CAUTION

EQUIPMENT OPERATION HAZARD

When devices are used for applications with technical safety requirements, the relevant instructions must be followed.

Use only Schneider Electric software or approved software with Schneider Electric hardware products.

Failure to follow these instructions can result in minor or moderate injury.

About The Book

At a Glance

Document Scope

This manual describes the SCADAPack 4000 Transmitters
Models 4012, 4032 and 4102

Validity Notes

This document is valid for all versions of the SCADAPack 4000 Transmitters
Models 4012, 4032 and 4102.

Product Related Information

⚠WARNING

UNINTENDED EQUIPMENT OPERATION

The application of this product requires expertise in the design and programming of control systems. Only persons with such expertise should be allowed to program, install, alter and apply this product.

Follow all local and national safety codes and standards.

Failure to follow these instructions can result in death or serious injury.

User Comments

We welcome your comments about this document. You can reach us by e-mail at supportTRSS@schneider-electric.com.

Overview

This user manual describes the installation, operation and maintenance for the SCADAPack 4000 multi-variable and single variable transmitters. The following table lists the transmitter models that are described in this manual.

Model Number	Transmitter Type	Mounting Type
4102	Multivariable	Flange body mounting
4012	Gage or Absolute pressure	1/2" male NPT mounting
4032	Differential pressure	Flange body mounting

The **Installation** section of this manual describes the installation and wiring of the SCADAPack 4000 transmitters.

The **Operation** section contains procedures for configuring a SCADAPack 4000 transmitter using the SCADAPack 4000 Configurator.

The **Modbus Database** section describes the Modbus registers used to monitor and configure the transmitter measurement and operational parameters.

These transmitters are configured using the **SCADAPack 4000 Configurator** UI, which is shipped on an accompanying Configuration CD. The SCADAPack 4000 Configurator supports the configuration, monitoring, and calibration of the SCADAPack 4000 transmitters.

Launch the Configuration CD, install the SCADAPack 4000 Configurator, and refer to the online help for further assistance.

Installation

SCADAPack 4000 Transmitter Mounting

SCADAPack 4000 transmitters can be supported by the process piping as shown in ***Figure 1*** and ***Figure 2*** or mounted to a vertical or horizontal pipe or surface using the optional mounting bracket shown in ***Figure 3*** and ***Figure 4***.

The transmitter should be mounted so that any moisture condensing or draining into the field-wiring compartment can exit through one of the two threaded conduit connections.

⚠ CAUTION
To avoid damage to the 4000 sensor, do not use any impact devices, such as an impact wrench or stamping device on the transmitter.

- Use a suitable thread sealant on pipe connections.

Process - Mounted Transmitter

A SCADAPack 4000 transmitters may be mounted to and supported by the process piping as shown in ***Figure 1*** and ***Figure 2***.

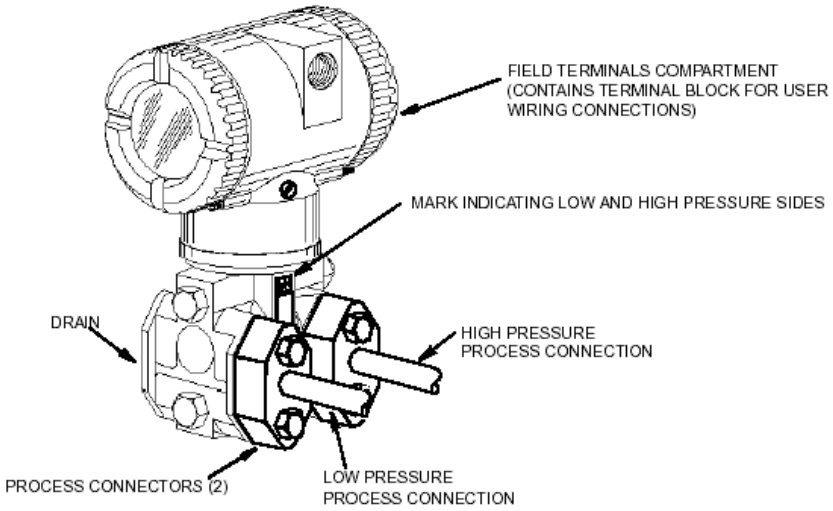

Figure 1: Process-Mounted - Flange Mounting

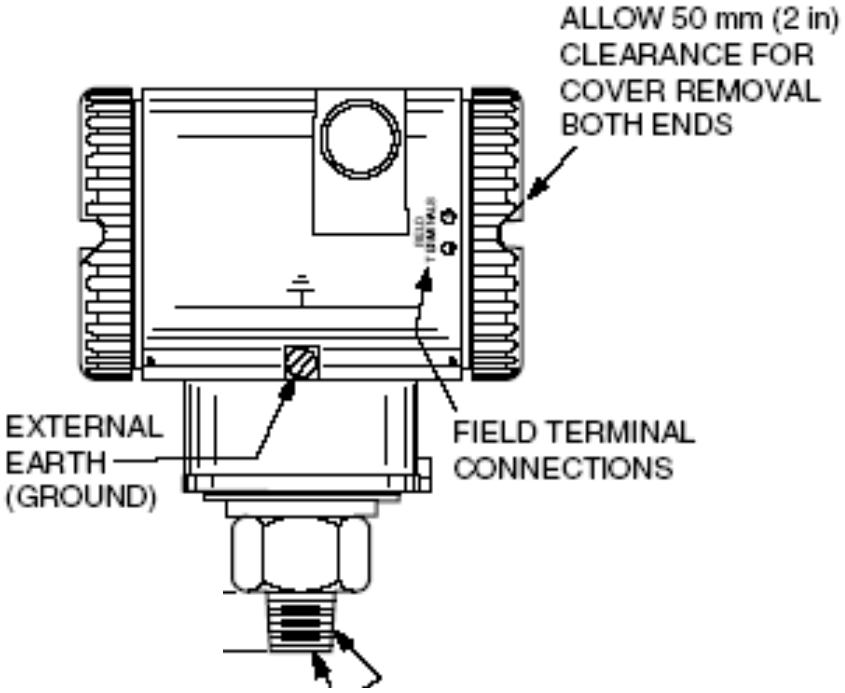

PROCESS CONNECTION ½ NPT EXTERNAL THREAD AND ¼ NPT INTERNAL THREAD

Figure 2: Process-Mounting - 1/2 NPT Mounting

Pipe - or Surface-Mounted Transmitter

To mount a SCADAPack 4000 transmitter to a pipe or surface, use the Optional Mounting Bracket Set (Model Code Option -M). Referring to ***Figure 3*** and ***Figure 4***, secure the mounting bracket to the 4000 transmitter using the two lock washers and screws provided. Mount the 4000 transmitter with mounting bracket to a vertical or horizontal, DN 50 or 2-in pipe. To mount to a horizontal pipe, turn the U-bolt 90° from the position shown in ***Figure 4***. The mounting bracket can also be used for wall mounting by securing the bracket to a wall using the U-bolt mounting holes.

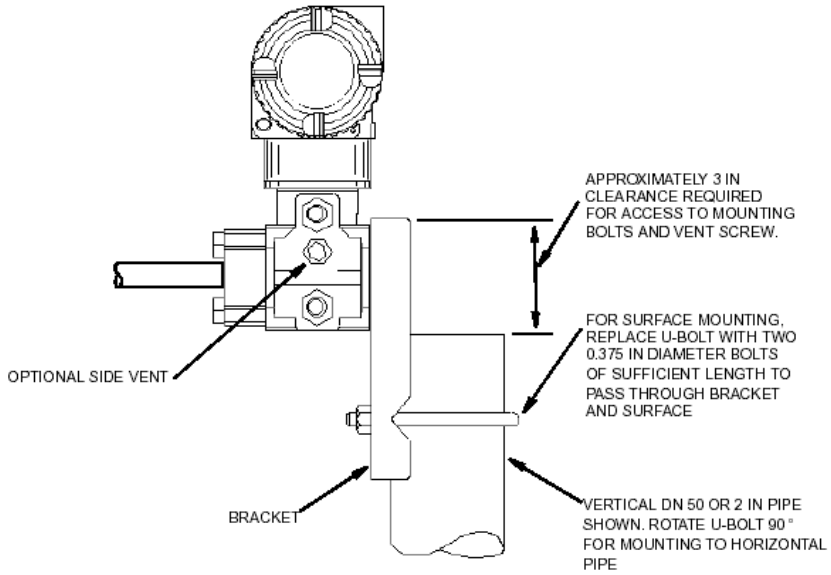

Figure 3: Mounting 4000 transmitter to a Pipe or Surface – Flange Mounting

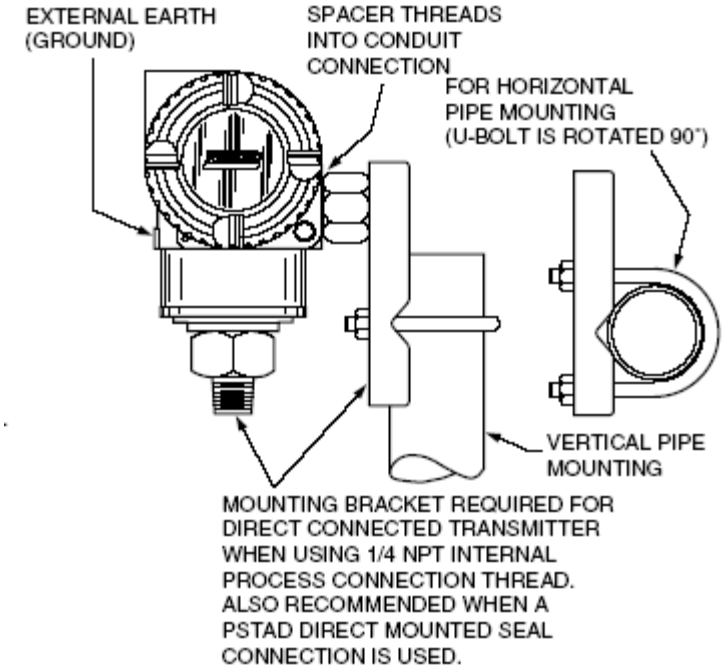

Figure 4: Mounting 4000 transmitter to a Pipe or Surface – 1/2 NPT Mounting

Positioning Transmitter Housing

The transmitter housing (top works) can be rotated up to one full turn in the counterclockwise direction when viewed from above for optimum access to adjustments, display, or conduit connections.

- Do not rotate the housing more than one turn from the “as received” position. If there is doubt about the housing rotational position, turn fully clockwise and then back off no more than one full turn.
- The small setscrew on the housing keeps the housing from being rotated too far. This is NOT a locking screw. Damage to the housing can occur if this setscrew is tampered with.

Manifold Types and Installation

Several manifold models are available to interface a transmitter with the process piping. The PGI-M573 has ½” FNPT inlets and ½” FNPT outlets, while the PGI-M673 has ½” FNPT inlets and Instrument Flange outlets. Two options are available. The CDT option is of carbon steel construction while the SDJ option uses 316SS NACE construction (140F max) and has a fluorosilicone stem seal.

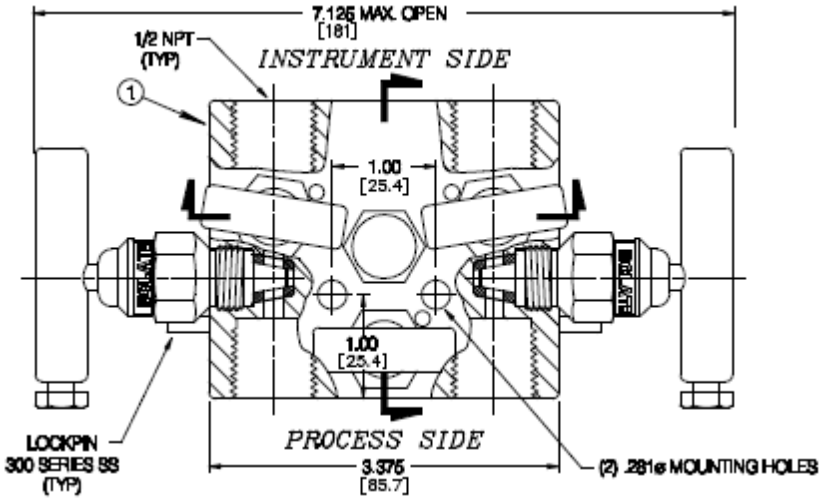

Figure 5: PGI-M573 Five Valve Manifold

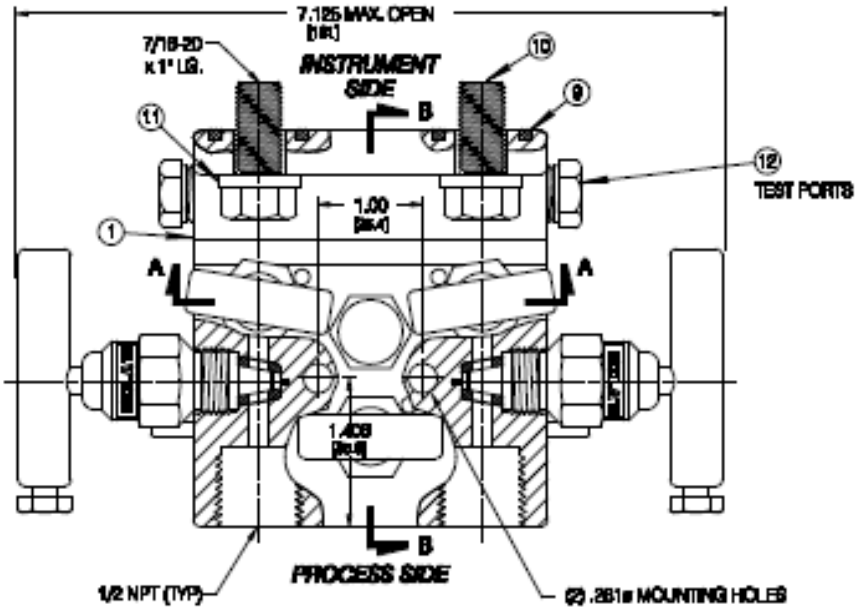

Figure 6: PGI-M673 Five Valve Manifold

The bolts to mount the PGI-M673 model to the sensor are 7/16-20 x 1”

Connections For Sensor Calibration

It should be noted that when an Absolute (Static) Pressure calibration is performed the bypass or cross feed valve on the manifold is opened. When performing a Differential Pressure calibration the bypass valve is closed.

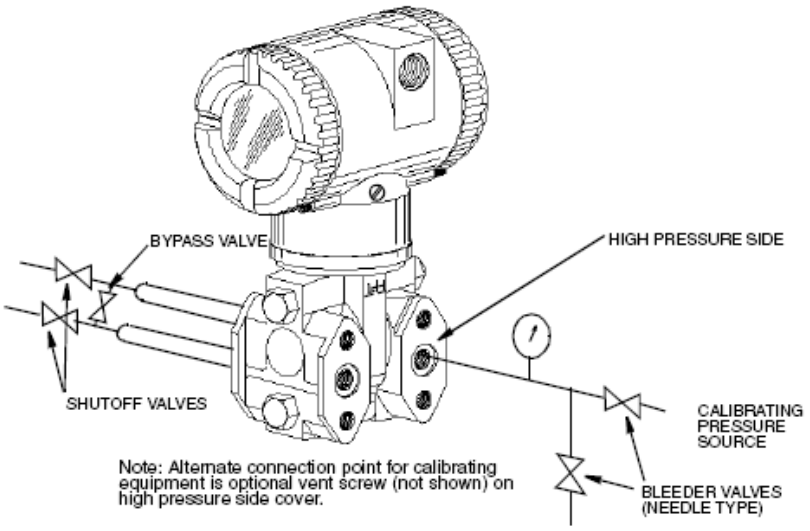

Figure 7: Differential Pressure Calibration Connections

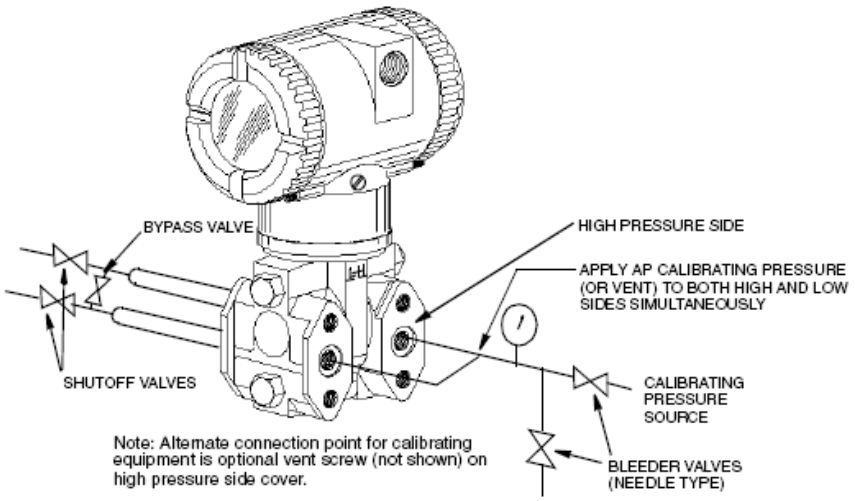

Figure 8: Absolute Pressure Calibration Connections

Optional Display Module

The optional display module is used to provide local display of meter run data. The display may be configured using the SCADAPack 4000 Configurator, Realflo, Flow Computer commands, or Modbus Register Mapping. The data to display and the interval between the displayed items is user defined.

The SCADAPack 4000 Configurator is installed from the Hardware Documentation CD. When installed on your PC, it is found in the Windows || Programs || Schneider Electric || 4000 program group. Refer to the online help document of this program for additional assistance in configuring your transmitter display.

The SCADAPack 4000 transmitter can also be configured using the Realflo application. Refer to the MVT Configuration commands section of the Realflo User and Reference manual for complete information on using Realflo to configure the Display Module.

The Display Control Configuration section of the TeleBUS Protocol Section of the Realflo User and Reference manual provides the information for using the Display Module with Flow Computer commands.

The Modbus Register Mapping section of this manual contains information on configuring the Display Module using Modbus registers.

Configuring a SCADAPack transmitter using the local display is possible with older transmitters only. See the application note “Configuring an older SCADAPack Transmitter using the Local Display.pdf”, located in the same directory as this document, for a detailed procedure. Newer SCADAPack transmitters no longer have this configuration menu available on the local display, and have to be configured using other means as noted above. If you cannot access the menu, it is not available on your transmitter version.

Adding the Optional Display

To add the optional display, refer to ***Figure 9*** and proceed as follows:

- Turn off the transmitter power source.
- Remove the electronics compartment cover by rotating it counterclockwise. Screw in the cover lock if applicable.
- Plug the display into the receptacle at the top of the electronics assembly.
- Seat the O-ring in its groove in the display housing. Then insert the display into the electronics compartment by grasping the two tabs on the display and rotating it approximately 10° in a clockwise direction.
- Install the new cover (with a window) onto the housing by rotating it clockwise until the O-ring contacts the housing; then continue to hand tighten it as much as possible (at least 1/4 turn). If cover locks are present, align the serration in the cover with the lock and unscrew the lock until it extends into the cover serration.
- Turn on the transmitter power source.

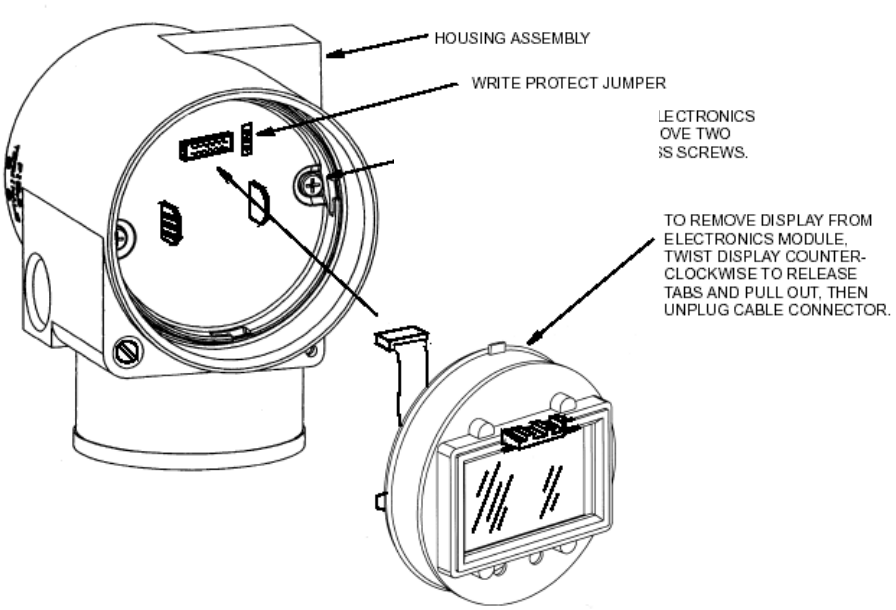

Figure 9: Optional Display and Write Protect Jumper

The optional display can be rotated within the housing to any of four positions at 90° increments.

To do this, grasp the two tabs on the display and rotate it about 10° in a counterclockwise direction. Pull out the display. Fully seat the O-ring in its groove in the display housing. Turn the display to the desired position, reinsert it in the electronics module, aligning the tabs on the sides of the assembly, and twist it in the clockwise direction.

Write Protect Jumper

The write protect jumper is located to the right of the display connector as shown in the figure below. The jumper is used to connect two of the three pins on the write protect header.

- Connecting the top two pins with the jumper disables the write protection.
- Connecting the bottom two pins with the jumper enables the write protection.

See section ***Write Protecting the Modbus Database*** for information on the effects of the Write Protect jumper.

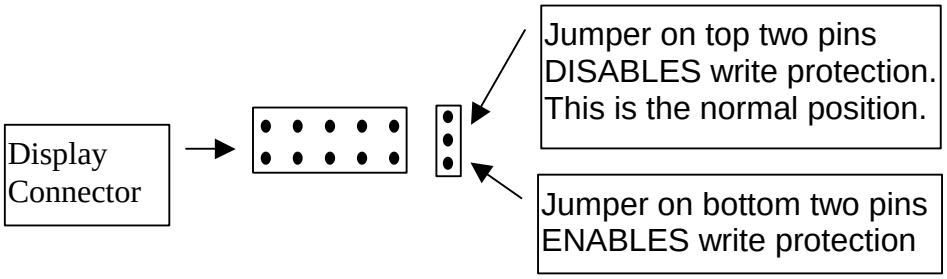

Transmitter Field Wiring

The installation and wiring of a SCADAPack 4000 transmitter must conform to local code requirements.

Note for North America

Seal not required when installed with rigid conduit per requirements of the applicable electrical code. When using instrument cable approved for the hazardous location, a seal must be made with an approved cable gland or conduit seal per the requirements of the applicable electrical code.

Note for ATEX IECEx

Seal required when installed with rigid conduit per requirements of the applicable electrical code. When using instrument cable approved for the hazardous location, a seal must be made with an approved cable gland or conduit seal per the requirements of the applicable electrical code.

For access to the field terminals, thread the cover lock (if present) into the housing to clear the threaded cover and remove the cover from the field terminals compartment as shown in ***Figure 10***. The embossed letters **FIELD TERMINALS** identify the proper compartment.

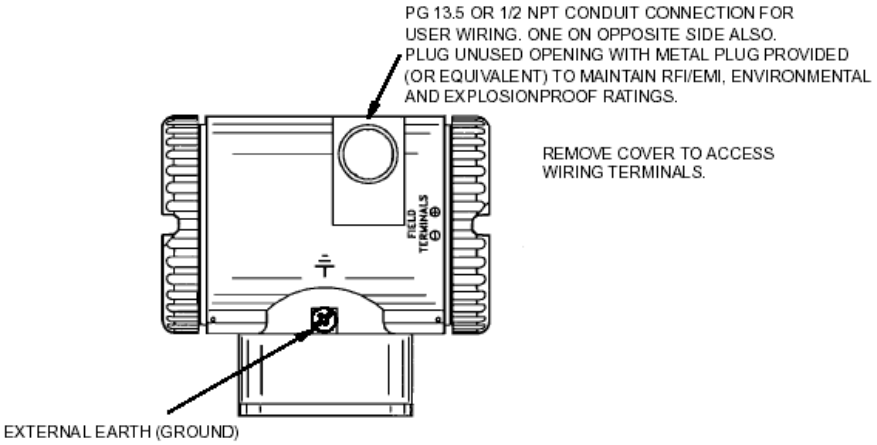

Figure 10: Accessing Field Terminals

The transmitter uses screw termination style connectors for termination of field wiring. These connectors accommodate solid or stranded wires from 16 to 28 AWG. The connectors are removable for field service and replacement purposes. Leave enough slack in the field wiring for the connector to be removed.

The use of transient/surge protection is recommended in installations prone to high levels of electrical transients and surges.

⚠ CAUTION
Remove power before servicing unit.

The threaded end cap with the terminal board wiring diagram must be installed on the housing end that has the terminal board. This is a Class 1, Div. 2 Hazardous Locations requirement.

Terminal Board Layout

SCADAPack 4000 transmitters are available with one of six different terminal configurations depending on the transmitter model.

Connector pinouts and wiring examples are described in each of the respective sections of this manual.

A SCADAPack 4000 transmitter model 4102, terminal board has terminal connections for input power, serial communication, analog output and RTD input. The 4102 is available with an optional LAN connection.

SCADAPack 4000 transmitters that include the communication and I/O options have four LAN connection terminals, LAN enable jumper link and a LAN LED. This version has four RTD connections and two Analog output connections. The terminal board layout is shown in ***Figure 11*** for the transmitter with an Ethernet port. The spare fuse is denoted with the asterisk.

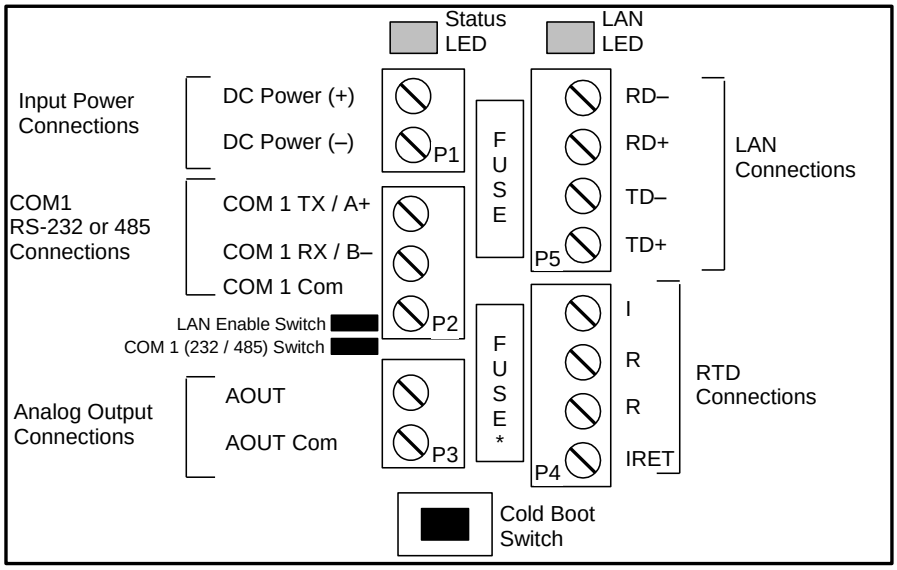

Figure 11: Terminal Board Layout – Transmitter with Ethernet port

SCADAPack 4000 transmitter models that include serial communication and analog output option without the LAN option have terminal connections for input power, serial communication, analog output and RTD input. The terminal board layout is shown in ***Figure 12*** for the serial only 4102 transmitter. The spare fuse is denoted with the asterisk.

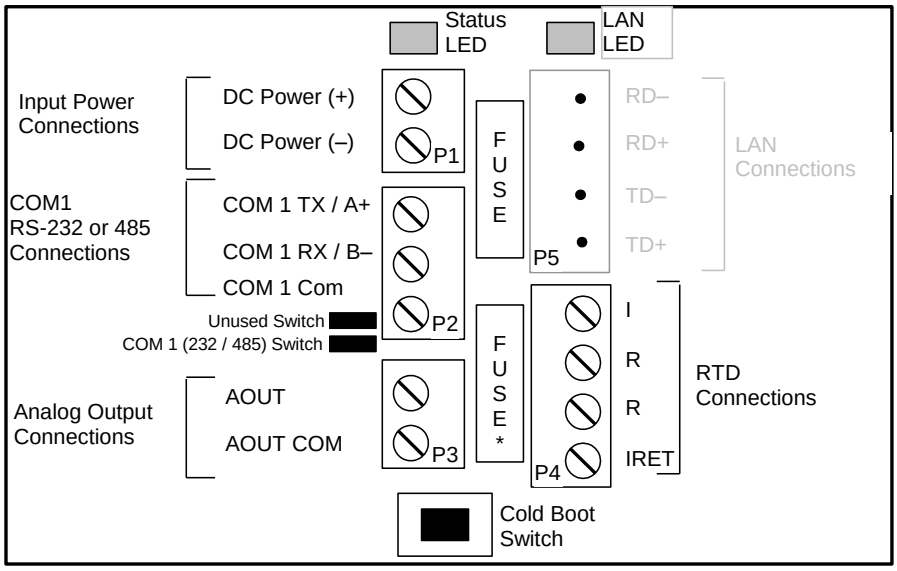

Figure 12: Terminal Board Layout – Transmitter with serial ports only

Transmitter models that include serial communication without the LAN or analog output options have terminal connections for input power, serial communication, and RTD input. The terminal board layout is shown in ***Figure 13*** for the serial only 4102 transmitter. The spare fuse is denoted with the asterisk.

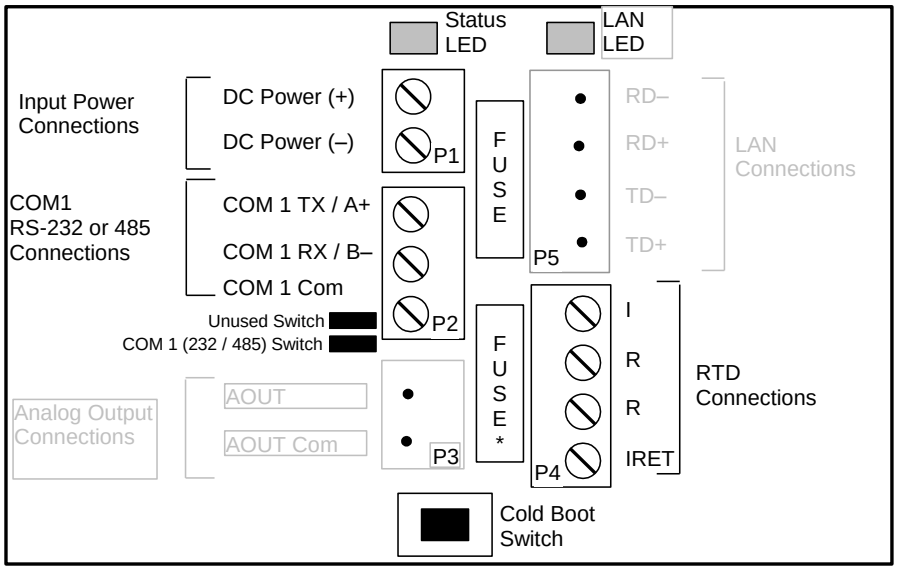

Figure 13: Terminal Board Layout - Serial Only, No Analog Output

SCADAPack 4000 Modbus Pressure Transmitter models that include the communication and I/O options have terminal connections for input power and serial communication. The terminal board layout is shown in ***Figure 14*** for the MPT transmitters. The spare fuse is denoted with the asterisk.

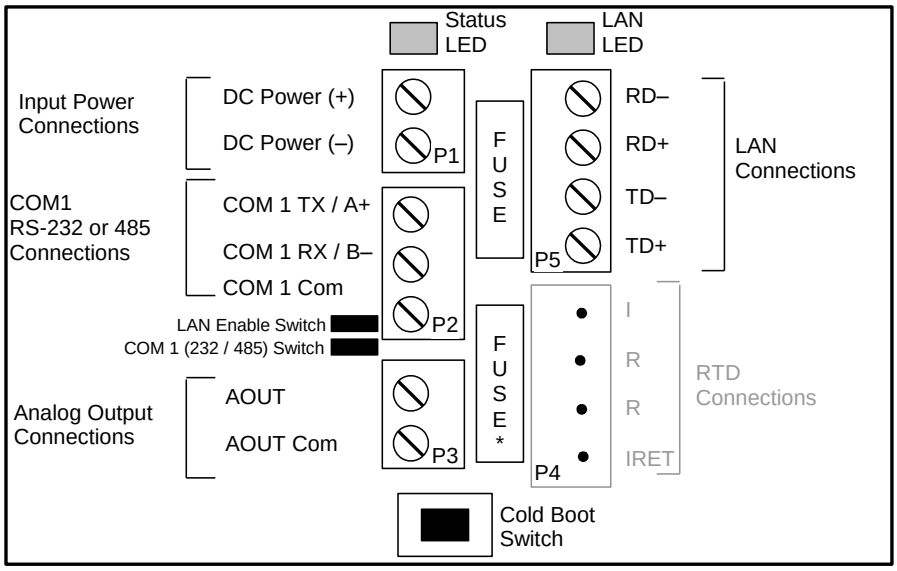

Figure 14: Terminal Board Layout - LAN, Serial and Analog Output MPT Model

SCADAPack 4000 Modbus Pressure Transmitter (MPT) models that include serial communication and analog output option without the LAN option have

terminal connections for input power, serial communication and analog output. The terminal board layout is shown in ***Figure 15*** for the MPT transmitters. The spare fuse is denoted with the asterisk.

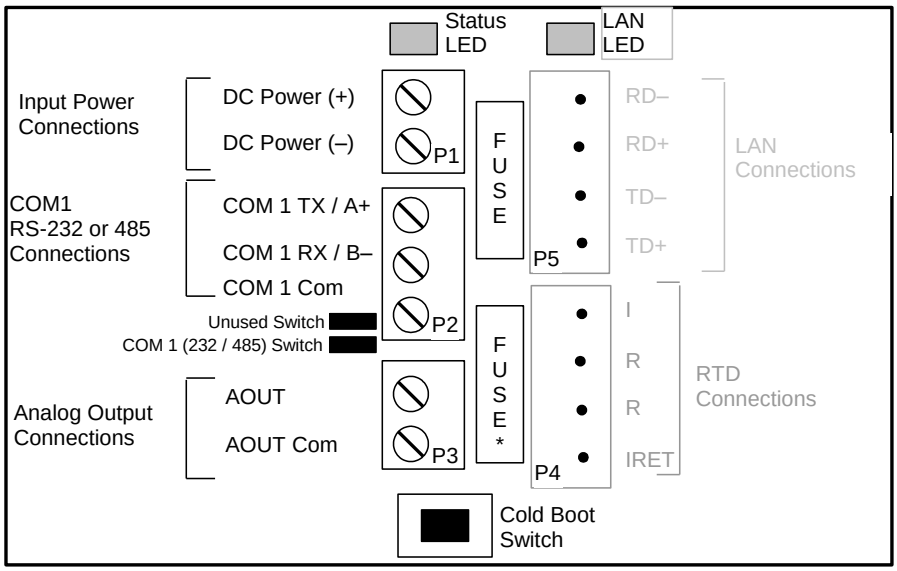

Figure 15: Terminal Board Layout - Serial and Analog Output MPT Model

SCADAPack 4000 Modbus Pressure Transmitter (MPT) models that include serial communication without the analog output option have terminal connections for input power and serial communication. The terminal board layout is shown in ***Figure 16*** for the MPT transmitters. The spare fuse is denoted with the asterisk.

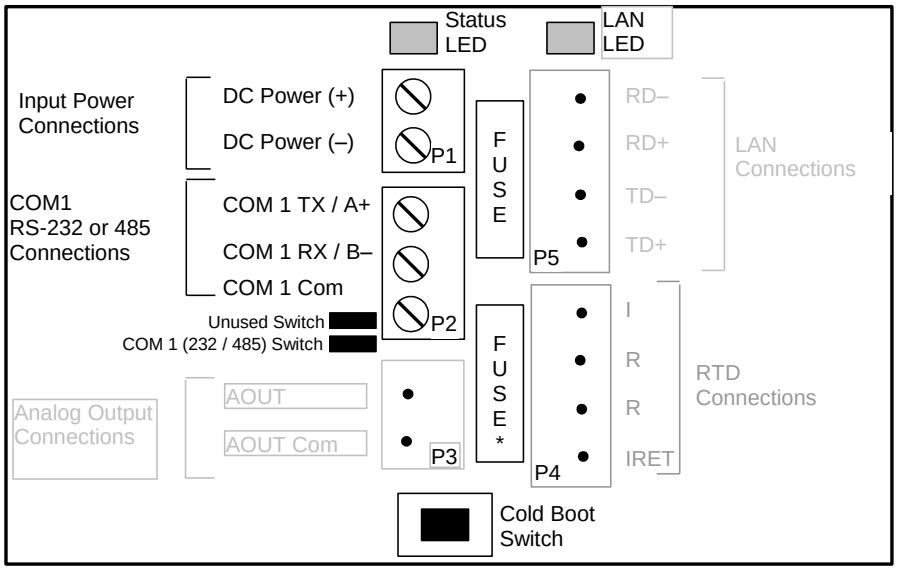

Figure 16: Terminal Board Layout - Serial Only MPT Model

Power Supply

SCADAPack 4000 transmitters are powered from a 9 to 30VDC input power source.

Input power is applied to the +PWR and –PWR terminals on connector P1.

Refer to the ***Specifications*** section of this manual for the minimum and maximum operating voltages and input power requirements.

When the input voltage is below the minimum recommended voltage the transmitter will turn off.

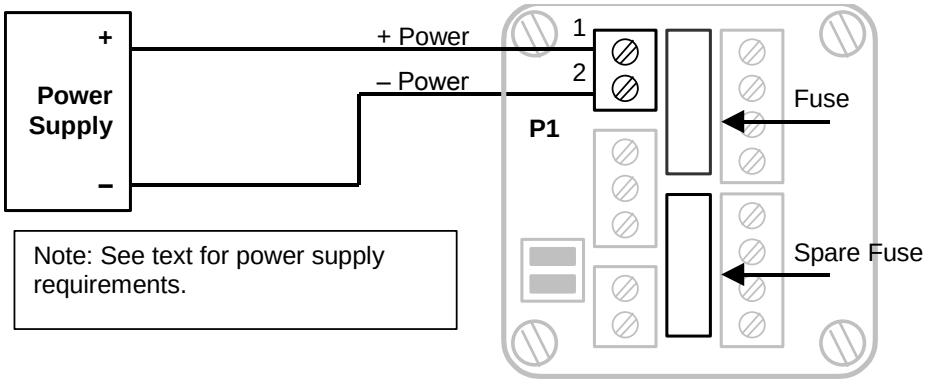

Figure 17: Input Power Wiring

Fusing

The transmitter power supply inputs are fused on the terminal board. The fuse is located between connectors P1 and P5. Remove these connectors to have access to the fuse. The replacement fuse is a Littelfuse R452.500. Littelfuse R452.500 is available from Schneider Electric in a kit comprising 10 fuses; Part number of the fuse kit is TBUM297308.

There is a spare fuse located between P3 and P4.

System Grounding

The transmitter circuitry is electrically isolated from the housing for voltages up to 550Vac. Terminal board connections labeled COM on connectors P2, P3 and P5 are tied together and connected to –PWR on the input power terminal block P1. The Serial Communication Ports, Analog Output and Input Power share the same electrical common.

RTD Input

The 4102 transmitter supports a connection to an RTD. A 4-wire connection to the RTD is recommended for the highest accuracy. See ***Figure 18*** for wiring information for 4-Wire RTDs.

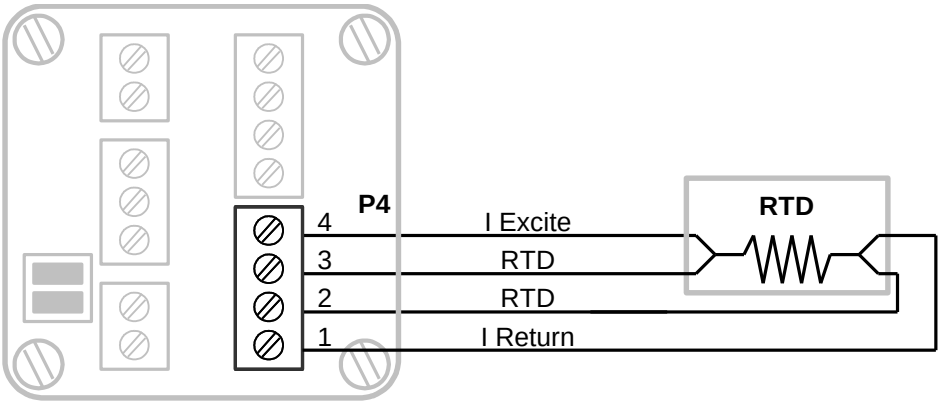

Figure 18: 4-Wire RTD Wiring

A 3-Wire RTD can be used with a minimal reduction in accuracy. When using 3 wire RTDs run 4 wires as long as possible from the terminal board to the RTD. See ***Figure 19*** for wiring information for 3-Wire RTDs.

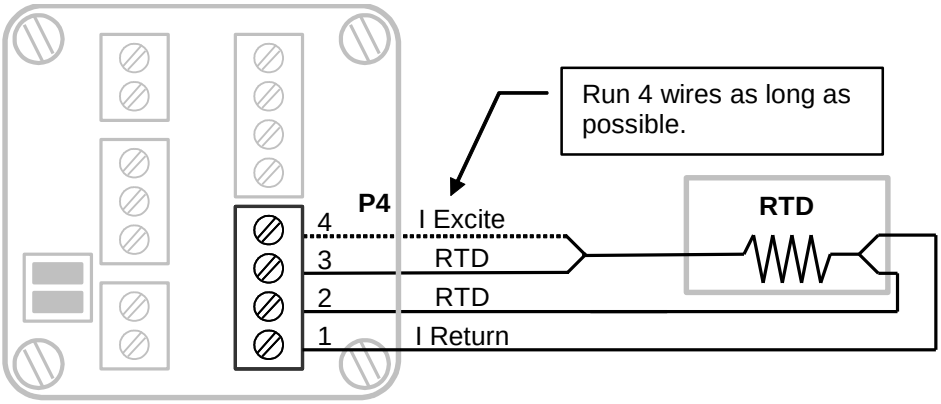

Figure 19: 3-Wire RTD Wiring

4102 transmitters shipped after approximately Jan 1, 2007 have RTD measurement circuitry that compensates for the wiring resistance in 3-Wire RTDs. See ***Figure 20*** for wiring information for an alternate wiring of 3-Wire RTDs. To verify that the transmitter can be wired with this alternate wiring method refer to the RTD wiring diagram inside the housing end cap.

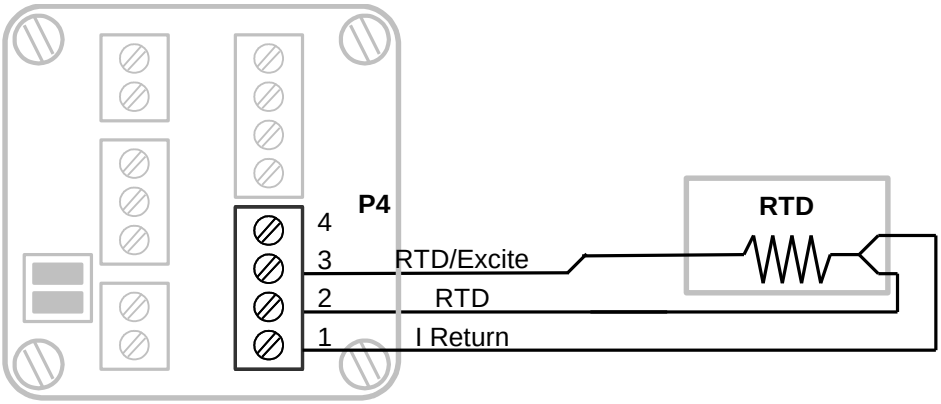

Figure 20: Alternate 3-Wire RTD Wiring

Analog Output

Some versions of SCADAPack 4000 transmitters have a single 0-20mA current sinking analog output. The analog output is either associated with the built-in PID controller, or may be used as a general purpose analog output. The analog output accepts SCADAPack standard signed 16-bit integer output values. Valid values are -8192 to 32767, which represent 0 to 20mA output. A value of 0 represents 4mA.

When a sinking analog output is wired to an external device the operating characteristics of the analog output are considered. As can be seen in ***Figure 21: Analog Output Wiring*** the LOAD does not connect to ground at any point. The LOAD must be able to float above ground in order for the analog output to function. The analog output must be connected to a differential input device

For example, in the wiring example shown in Figure 21, the points A and B will each be at a positive voltage based on the sinking current output, the LOAD resistance and the Power Supply voltage.

For a sinking current of 0 mA, a LOAD resistance of 250 Ohms and a power supply voltage of 24VDC the voltage at both A and B points is 24VDC.

For a sinking current of 20 mA, a LOAD resistance of 250 Ohms and a power supply voltage of 24VDC the voltage at point A is 24VDC and the voltage at point B is 24VDC minus 5VDC (20 mA x 250 Ohms) or 19VDC.

The LOAD cannot be connected to ground in any wiring configuration for the analog output.

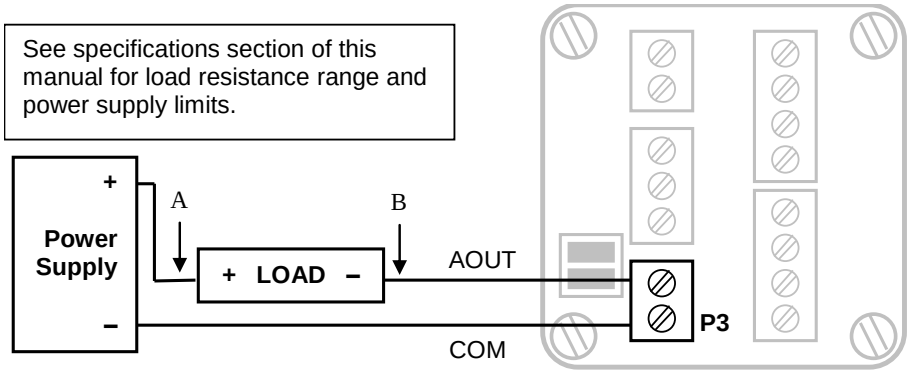

Figure 21: Analog Output Wiring

When the PID control is operating the analog output is the output of the PID controller. The value of the output is scaled so that a value of 0 means the PID controller output is at the zero-scale limit. A value of 32767 means the PID controller output is at the full-scale limit.

When the PID controller is not operating the analog output may be controlled by writing an appropriate value to Modbus register 40468. Valid values are -8192 to 32767, which correspond to 0 to 20mA output. A value of 0 corresponds to 4mA.

The PID controller is configured using the SCADAPack 4000 Configurator software or using Modbus registers.

- See section ***PID Controller*** of the Modbus Registers chapter of this manual for information on using Modbus registers to configure the PID controller.

Current Output

The analog output is a sinking output that is not ground referenced. The load connects between connector P3 terminal 1 and a positive power supply as shown in ***Figure 21: Analog Output Wiring***. Refer to the ***Specifications*** section for power supply limits and load resistance ranges.

Analog Output Data Format

The analog output has a 12-bit, unipolar, digital to analog converter. The table below shows the output current for several D/A values. Positive data will output current in the range of 4 to 20mA. Negative data will output current below 4mA. The resolution of the analog output is approximately 5µA.

D/A Value	Current
-8192	0 mA
0	4.000 mA
11	4.005 mA
8192	8.000 mA
16384	12.000 mA

24576	16.000 mA
32767	19.995 mA

Internal Analog Input

SCADAPack 4000 transmitters provide one analog input point. The input monitors the supply voltage.

The analog input returns SCADAPack standard signed 16-bit integer values. Valid values are 0 to 32767 corresponding to 0 to 32.767 volts. The input value is scaled to represents the voltage in millivolts.

The internal analog input is mapped to Modbus register 40397.

Serial Communication Port

A SCADAPack 4000 transmitter is equipped with single serial communication port for interface to a flow computer, HMI or a PC running the SCADAPack 4000 Configurator software. The serial communication port supports RS-232 serial communication and 2-wire RS-485 serial communication.

- The user serial port on the transmitter controller is designated COM1. Connections to COM1 are made using a removable 3 position terminal block labeled P2.
- The serial port is configured as Modbus RTU protocol, 8 data bits, no parity and 1 stop bit. The baud rates supported are 1200, 2400, 4800, 9600, 19200 and 38400. The default value is 9600.
- Modbus addresses from 1 to 255 in standard Modbus mode, and 1 to 65534 in extended address mode is supported.
- Refer to the SCADAPack 4000 Configurator Manual for information on using the SCADAPack 4000 Configurator software to configure the serial port.
- See section ***Communications*** of the Modbus Registers chapter of this manual for information on using Modbus registers to configure the serial port.

RS-232 Serial Communications Port

COM1 on a SCADAPack 4000 transmitter is capable of RS-232 operation. RS-232 operation is selected by sliding the DIP switch to the LEFT on the terminal board labeled RS-232. RS-232 operation uses RxD, TxD and COM signals. Refer to ***Figure 22: COM1 RS-232 Wiring*** for connector wiring descriptions.

NOTES:

- The low power transmitters used in COM1 generate 0 to 5V levels. This is less than the RS-232 specification but still compatible with all RS-232 receivers. Cables should be limited to a maximum of 10 ft (3m).
- Shielded cable should be used to isolate the signals from noise and to comply with FCC and CE regulatory requirements. The shield is connected to Ground at one end only.

RS-232 Wiring Example

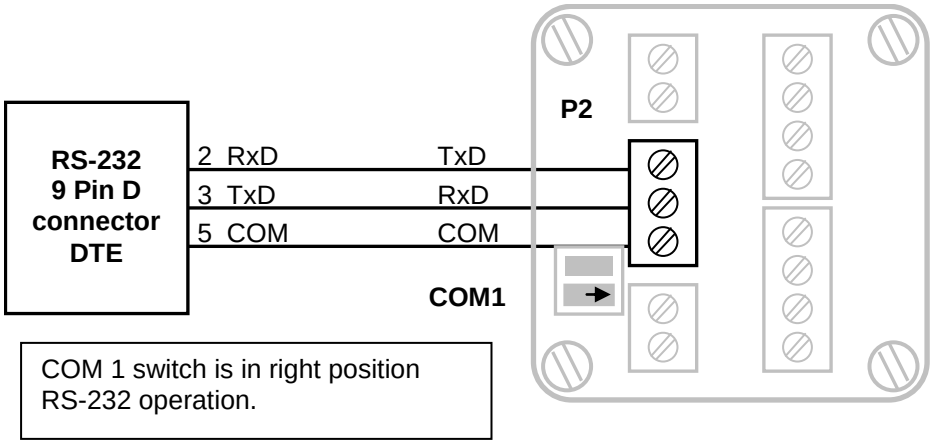

Figure 22: COM1 RS-232 Wiring

RS-485 Serial Communications Port

COM1 on a SCADAPack 4000 transmitter is also capable of 2 - wire RS-485 operation. RS-485 operation is selected by setting the DIP switch to the LEFT on the terminal board labeled RS-232. RS-485 operation uses A+ and B– signals. Refer to ***Figure 23: COM1 RS-485 Wiring*** for connector wiring descriptions.

RS-485 uses balanced differential signals. Proper RS-485 operation requires that devices communicating on the signal pair be referenced to the same point. In the transmitter the devices connected to the Power Input and I/O establish this reference point. The negative side of the incoming power (–PWR on P1-1) will normally establish the reference point.

The RS-485 serial communication ports transmit and receive differential voltages to other RS-485 devices on a network. The RS-485 specification allows a maximum of 32 devices connected on a single RS-485 network. The specification for RS-485 recommends that the cable length should not exceed a maximum of 4000 feet or 1200 meters. Termination resistors are required when using long cable lengths and high baud rates. Refer to section ***RS-485 Termination Resistors*** section for information on termination resistors.

The signal grounds of the RS-485 devices in the network are not connected together but instead are referenced to their respective incoming electrical grounds. The grounds of the RS-485 devices on the network must be within several volts of each other.

Shielded cable should be used to isolate the signals from noise and to comply with FCC and CE regulatory requirement. The shield is connected to Ground at one end only.

RS-485 Wiring Example

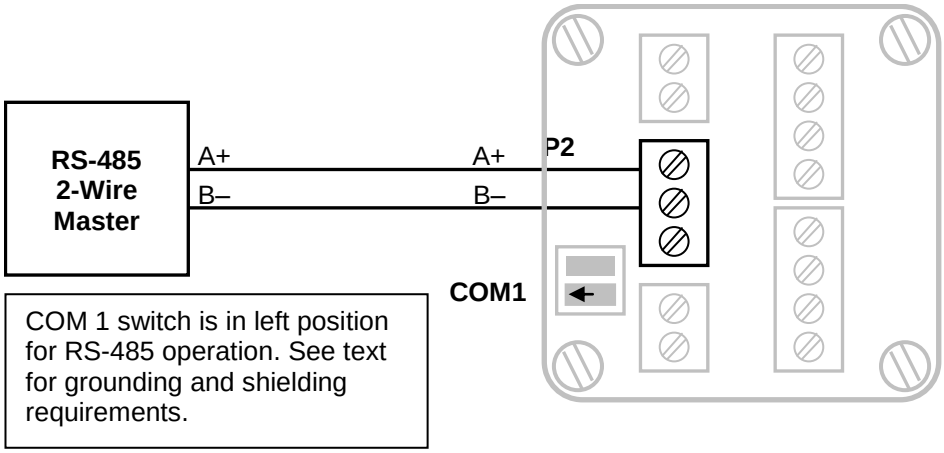

Figure 23: COM1 RS-485 Wiring

RS-485 Bias Resistors

The RS-485 receiver inputs on the transmitter are such that received data is driven to a valid state (space) when there are no active drivers on the network. The value of these bias resistors is 5100 ohms from Ground to the B– input and 5100 ohms from +5V to the A+ input.

RS-485 Termination Resistors

Termination resistors are required in long networks operating at the highest baud rates. Shorter networks in high noise environments may also benefit from terminations. Networks as long 1000 ft. operating at 9600 baud will function without termination resistors. Terminations should be considered if the baud rate is higher and the network is longer.

When termination resistors are required, they are installed on the first and last station on the RS-485 wire pair. The other stations should not have termination resistors.

RS-485 networks are generally terminated with 120-ohm resistors on each end. The required 120-ohm resistor is supplied and installed by the user. When using termination resistors it is necessary to increase the line biasing by adding lower value bias resistors in order to generate at least 0.2V across RS-485 line. The suggested value of the bias resistors is 470 ohms. One bias resistor is installed from the RS-485 line B– to COM. The second bias resistor is installed from the RS-485 line A+ to +5V. +5V is not available on the transmitter but may be available on another device on the RS-485 network.

LAN Communication Port

SCADAPack 4000 transmitters support an optional LAN port for communicating on a local area network. The LAN port provides an interface to a flow computer, HMI or a PC running the SCADAPack 4000 Configurator software.

Modbus/TCP and Modbus RTU in TCP protocol is removed in Sensor firmware version 1.60 and newer. The Modbus/UDP protocol supports continuous polling by up to 5 devices.

The LAN port is configured using the SCADAPack 4000 Configurator. See the user manual of the SCADAPack 4000 Configurator software for details. Parameters that are configured include:

- The IP address, subnet mask and gateway address.
- The UDP protocol to use, Modbus/UDP or Modbus RTU in UDP, and the listening port number.
- The Modbus address for the LAN port.
- The Friendly IP List for secure access to the 4000 transmitter.

LAN Wiring

A SCADAPack 4000 transmitter is wired directly to standard RJ-45 Category 5 cables using the four pin terminal labeled P5. These cables consist of four twisted pairs. Only the green and orange pairs are used. There is no standard for which color is used for the RD pair or the TD pair. The transmitter TD pair to the host RD pair and the transmitter RD pair to the host TD pair when connecting to PCs and hubs.

The LAN DIP switch is set to the RIGHT position when the LAN port is used. The LAN DIP switch must be in the RIGHT position when power is applied to the 4000 transmitter for the LAN port to work.

Connection to switches that are MDI/MDIX Auto crossover compatible, such as the Schneider Electric Model 5910 Ethernet Switch allow wiring to either of the data pairs as shown in ***Figure 24: Ethernet Wiring*** below.

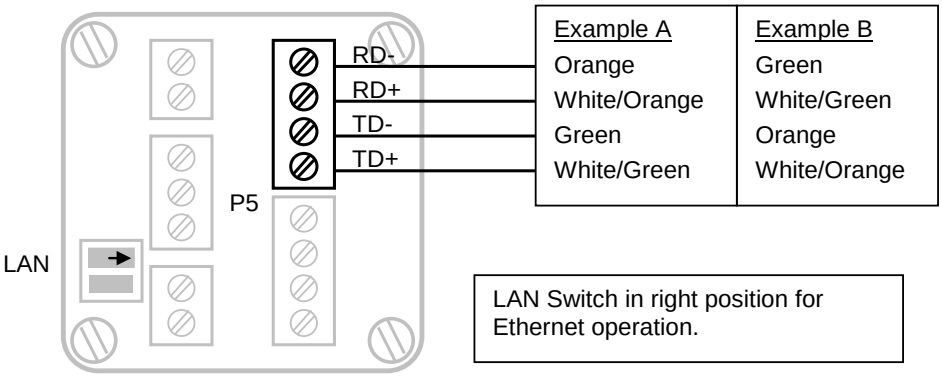

Figure 24: Ethernet Wiring

Connecting Directly to a PC

When connecting the transmitter directly to a PC, the transmitter TD wire pair connects to the PC RD pair. The transmitter RD wire pair connects to the PC TD

pair. Observe the polarity. The white/stripped wires are (+) while the solid wires are (–). Refer to ***Figure 25: RJ-45 Connection to PC*** for wiring details.

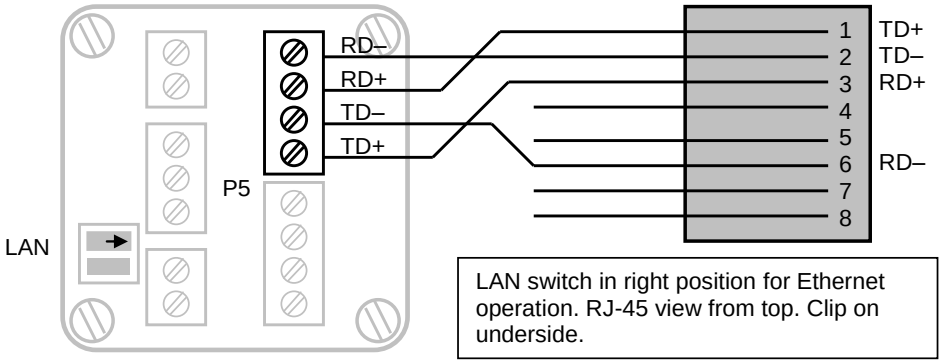

Figure 25: RJ-45 Connection to PC

Connecting to a Hub or Switch

When connecting the transmitter to a Hub, the transmitter TD wire pair connects to the hub or switch RD pair. The transmitter RD wire pair connects to the hub or switch TD pair. Observe the polarity. The white/stripped wires are (+) while the solid wires are (–). Refer to ***Figure 26: Connection to Hub*** for wiring details.

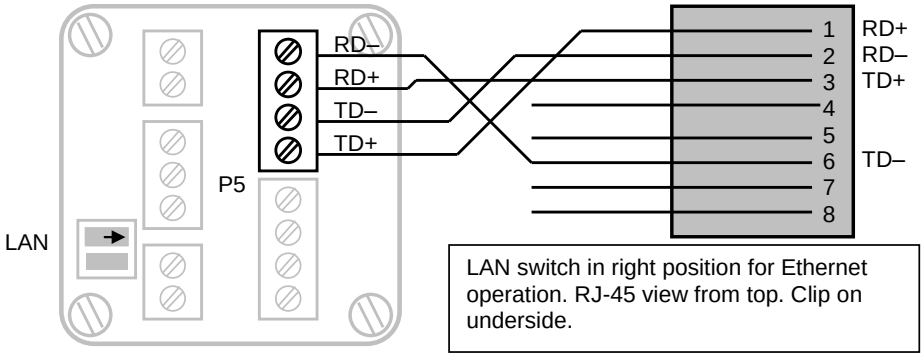

Figure 26: Connection to Hub or Switch

Ethernet Wiring Recommendations

- 10BaseT has a maximum length of 100m (350 feet). Wiring practices and electrical noise and interference may limit the practical distance to less than this.
- No more than 1/2" of the Ethernet cable should be untwisted otherwise it will be susceptible to crosstalk.
- Ethernet cables are generally not shielded. Shielded “Industrial Ethernet” cable is available for use in noisy environments. Data Tuff® from Belden is an example of such a cable.
- Pairs are used together. Wires that are not paired are not used.

Operation

Operating Modes

A SCADAPack sensor may start up in Run, Service, Sensor or Cold Boot mode.

Run Boot

A run boot occurs if the Cold Boot switch is not pressed at reset. A run boot installs the Modbus driver on com1. User-defined settings are read from EEPROM and used.

Service Boot

A service boot occurs when the Cold Boot switch is pressed at reset and remains pressed for between 3 and 15 seconds. The Status Led turns on solid after 3 seconds to indicate the service boot mode is selected.

A service boot installs the Modbus driver on com1, and sensor driver on com2. Default communication settings are used. The com2 serial port operates at 4800 baud, no parity, 8 data bits, and one stop bit.

Sensor Diagnostic Boot

A Sensor Diagnostic boot occurs when the Cold Boot switch is pressed at reset and remains pressed for between 15 and 30 seconds. The Status Led blinks rapidly after 15 seconds to indicate the Sensor Diagnostic boot mode is selected.

A Sensor Diagnostic boot allows direct communication with the sensor electronics. The com1 serial port operates at 4800 baud, no parity, 8 data bits, and one stop bit.

No other transmitter features are available. This mode is provided to allow use of sensor applications and tools that communicate directly with the sensor electronics.

Status LED bit 2 indicates the transmitter is in the Sensor Diagnostic mode. The other status bits are off. The Status LED will blink short, short, long while the transmitter is in the Sensor Diagnostic mode.

The Sensor Boot remains in effect until the transmitter is reset.

Cold Boot

A cold boot occurs when the Cold Boot switch is pressed at reset and remains pressed for more than 30 seconds. The STATUS Led blinks slowly after 30 seconds to indicate the cold boot mode is selected.

A cold boot initializes the 4000 transmitter to its default state.

- Com 1 serial port operates at 9600 baud, no parity, 8 data bits, 1 stop bit, and uses the Modbus/RTU protocol.
- Com2 serial port operates at 4800 baud, no parity, 8 data bits, and one stop bit.
- Station number is set to station 99 using standard addressing mode.
- IP address is set to 0.0.0.0, with a subnet mask of 255.255.255.0, and a gateway of 0.0.0.0.
- UDP protocol is set to Modbus/UDP and is set to use port 502.
- TCP protocol is set to Modbus/TCP and is set to use port 502.

The Modbus/TCP protocol is removed from SCADAPack 4000 transmitters with software version 1.60 or newer.

- The friendly IP list is disabled and cleared.

The table below shows the registers that are reset and their default values.

Primary Register	Alternate Register	Type	Value	Parameter
40015	None	Integer	8	Baud Rate (9600 baud)
40016	None	Integer	1	Station Number
40032 – 40035	30032 – 30035	ASCII	0	Tag Name (8 characters)
40036 – 40043	30036 – 30043	ASCII	0	Description (16 characters)
40044 – 40059	30044 – 30059	ASCII	0	Message (32 characters)
40126	None	Integer	4000	Display Scan Interval
40128	None	Integer	0	Display Control
40131	30131	Integer	0	Response Delay Time
40315	None	Integer	0	Display Valid Time
40398	None	Integer	0	Analog Output
40451	None	Integer	0	PID Controller Enable
40452 – 40453	None	Floating-point	0.0	Set Point
40454 – 40455	None	Floating-point	0.0	Gain
40456 – 40457	None	Floating-point	0.0	Reset Time
40458 – 40459	None	Floating-point	0.0	Rate Time
40460 – 40461	None	Floating-point	0.0	Deadband
40462 – 40463	None	Floating-point	32767.0	Full Scale Limit
40464 – 40465	None	Floating-point	0.0	Zero Scale Limit
40466 – 40467	None	Floating-point	1.0	Cycle Time
40468	None	Integer	0	Manual Output
40470	None	Integer	0	PID Operating Mode
40471 – 40472	None	Floating-point	0.0	User Defined Process Value

A Cold Boot does not reset the measurement parameters. See Register 40205 in section 0-***Modbus Register Database (40001 – 40500)*** section for information on resetting measurement parameters.

LAN LED

The LAN LED is on when power is applied to the transmitter and there is activity on the LAN. The LAN LED will be powered down after 5 minutes. Press the Cold Boot switch to restart the timer.

Status LED

The status LED is on when power is applied to the transmitter. The status LED is used to indicate the boot mode of the 4000 transmitter when the Cold Boot switch is used. The status LED will be powered down after 5 minutes. Press the Cold Boot switch to restart the timer.

Cold Boot Switch

The Cold Boot switch is used to start the transmitter in one of four boot modes. These modes are Run, Service, Sensor Diagnostic, and Cold Boot.

Firmware Loading

Periodically the firmware for a controller is updated to add new features or provide bug fixes. As they become available new firmware versions may be downloaded from www.schneider-electric.com.

Allowed connection for firmware loading for a **SCADAPack 4000** is **com1**.

Modbus Database

This section of the manual describes Modbus protocols used to communicate with a SCADAPack 4000 transmitter and the parameters that are assigned to Modbus registers.

Refer to the hardware manuals for the SCADAPack 4202 controllers for information on the Modbus database on these controllers.

The Modbus registers used are listed and described in two sections. First the Modbus registers are described in groups of related transmitter data, such as Process Variables or Transmitter and Sensor data, and secondly a complete sequential listing of the registers used is given.

Modbus Communication Overview

The implementation of Modbus on SCADAPack 4000 transmitters is based on the document number PI-MBUS-300 Rev B, Gould Modbus Protocol Reference Guide.

Modbus Protocols

Modbus RTU is a serial protocol that can be used in point to point or multidrop serial networks.

Modbus/TCP is an extension of serial Modbus, which defines how Modbus messages are encoded within and transported over TCP/IP-based networks. The Modbus/TCP protocol uses a custom Modbus protocol layer on top of the TCP protocol. Its request and response messages are prefixed by six bytes. These six bytes consist of three fields: transaction ID field, protocol ID field and length field. The encapsulated Modbus message has exactly the same layout and meaning, from the function code to the end of the data portion, as other Modbus messages. The Modbus ‘CRC-16’ or ‘LRC’ check fields are not used in Modbus/TCP. The TCP/IP and link layer (e.g. Ethernet) checksum mechanisms instead are used to verify accurate delivery of the packet.

Modbus/UDP communication mode is similar to Modbus/TCP communication mode. It has the same message format with the Modbus/TCP. The only difference between them is one uses TCP protocol and another uses UDP protocol.

Modbus RTU in TCP message format is exactly same as that of the Modbus RTU protocol. The main difference is that Modbus RTU in TCP protocol communicates with a controller through the Internet. The Modbus RTU in TCP protocol does not include a six-byte header prefix, as with the Modbus/TCP, but does include the Modbus ‘CRC-16’ or ‘LRC’ check fields. The Modbus RTU in TCP message format supports Modbus RTU message format.

Modbus RTU in UDP communication mode is similar to Modbus RTU in TCP communication mode. It has the same message format as the RTU in TCP message. The only difference between them is one uses TCP protocol and another uses UDP protocol.

The Modbus/TCP protocol is removed from SCADAPack 4000 transmitters with software version 1.60 or newer.

Modbus Function Codes

The following table lists the Modbus function codes or commands, supported by a SCADAPack 4000 transmitter.

Function Code	Description	Comments
03	Read Holding Registers	Read the contents of a register in 4xxxx register address range (Holding Registers).
04	Read Input Registers	Read the contents of a register in 3xxxx register address range (Input Registers).
06	Preset Single Holding Register	Writes data to a single register in the 4xxxx register address range.
16	Preset Multiple Registers	Writes data to several holding registers. The registers must be in a block continuous 4xxxx register addresses.

Modbus Station Addressing

A SCADAPack 4000 transmitters support standard or extended Modbus addressing.

- Standard addressing allows 255 stations and is compatible with standard Modbus devices.
- Extended addressing allows 65534 stations, with stations 1 to 254 compatible with standard Modbus devices.

Data Formats

The following table describes the data formats used for Modbus registers in a SCADAPack 4000 transmitter.

Data Type	Registers Required	Description
Integer	1	Unsigned integer in the range 0 to 65535.

Data Type	Registers Required	Description
Float	2	Floating-point numbers are in the IEEE 754 format. Numbers are made up of one sign bit (S), eight exponent bits (E), and twenty-three mantissa bits (M). A number consists of 4 bytes as shown below. Byte A Byte B Byte C Byte D SEEE EEEE EMMM MMMM MMMM MMMM MMMM MMMM Floating-point values are stored in two consecutive registers. Both registers must be read or written in the same Modbus command.
ASCII	1	Two characters are stored in each register. Valid values are any ASCII character. The first character is in the low order byte, the second in the high order byte. The string is terminated with a NULL (= 0) character if it is less than 8 characters. Set the first register to 0 to indicate a NULL (empty) string.

Write Protecting the Modbus Database

Write Protect Jumper

The transmitter can be write protected by installing the write-protect jumper. See ***Figure 9: Optional Display and Write Protect Jumper*** for the location of the write protection jumper.

- When the write-protect jumper is installed, registers 40001 to 40499 are read only.
- When the write-protect jumper is not installed, the read/write ability corresponds to the ***Modbus Register Database*** table.

Realflo Write Protect

The Flow Computer logs all changes to measurement parameters. When the flow computer is running the software write-protect is enabled. This prevents Modbus protocol commands and logic applications from writing the transmitter registers.

- When the software write-protect is enabled, registers 40001 to 40499, with the exception of the Analog Output and PID Controller registers, are read only.
- Analog Output register 40398 is read/write when the software write-protect is enabled
- PID controller registers 40451 to 40472 are read/write when software write-protect is enabled.

The software write-protect is disabled by default at reset.

Modbus Registers

This section of the manual describes some transmitter parameters that are assigned to Modbus registers. The registers described are divided into categories for ease of reference. See section 0-***Modbus Register Database (40001 – 40500)*** for a complete listing of transmitter Modbus registers.

The registers defined may be read only or read and write registers. The Read/Write column in the tables indicates the register type.

- **Read Only** indicates the register is read only.
- **Read/Write** indicates the register may be read or written to.

Process Variables

Primary Variable Value

Register(s) 40401 – 40402 (30401 – 30402) Read Only
These registers hold the primary variable as a floating-point number in the specified floating-point format.

- Static pressure for SP MPT
- Differential pressure for DP MPT
- Differential Pressure (DP) for MMT

Register(s) 40116 Read Only

This register holds the primary variable as an integer number. The diagnostic bits indicate the validity of this register. The data in this register is equivalent to register 40401 and 40402 rounded to the nearest integer.

- Static pressure for SP MPT
- Differential pressure for DP MPT
- Differential Pressure (DP) for MMT

Secondary Variable Value

Register(s) 40403 - 40404 (30403 – 30404) Read Only
These registers hold the secondary variable as a floating-point number in the specified floating-point format. The diagnostic bits indicate the validity of this register.

- none for SP MPT
- none for DP MPT
- Static Pressure (SP) for MMT

Register(s) 40117 Read Only

This register holds the secondary variable as an integer number. The diagnostic bits indicate the validity of this register. The data in this register is equivalent to register 40403 and 40404 rounded to the nearest integer.

- none for SP MPT
- none for DP MPT
- Static Pressure (SP) for MMT

Tertiary Variable Value

Register(s) 40405 - 40406 (30405 – 30406) Read Only
These registers hold the tertiary variable as a floating-point number in the specified floating-point format.

- none for MPT
- RTD temperature (RTD) for MMT

Register(s) 40118 Read Only

This register holds the tertiary variable as an integer number. The diagnostic bits indicate the validity of this register. The data in this register is equivalent to register 40405 and 40406 rounded to the nearest integer.

- none for MPT
- Static Pressure (SP) for MMT

Process Variable Integer Register Mode

Register(s) 40119 Read / Write

This register controls if negative values are allowed in registers 40116 to 40118. Valid values are 0 and 1. The default value is 0.

- 0 = allow negative numbers
- 1 = assign zero if the value is less than zero.

Primary Variable Units

Register(s) 40060 (30060) Read/Write
This register holds a value representing the engineering units for the primary variable. The primary variable is differential pressure for the 4102MMT and 4032MPT. The primary variable is static pressure for the 4012MPT. The units may only be changed if the transmitter is in off-line mode. Refer to register 40 206 for the transmitter mode state.

Value = Units	Value = Units
2 = Pascals (Pa)	11 = g/cm2
3 = kiloPascal (kPa)	12 = cmHg
4 = megaPascals (MPa)	13 = mmHg

5 = pounds per square inch (psi)

6 = inches of water at 68 F

7 = ftH2O

8 = atm

9 = bar

10 = kg/cm2

14 = torr

15 = mH2O – 4102MMT only.

16 = cmH2O

17 = mmH2O

18 = inHg

19 = mbar

30 = dy/cm2 – 4012MPT and 4032MPT only.

Secondary Variable Units

Register(s) 40061 (30061) Read/Write
This register is only implemented on the 4102MMT. This register holds a value representing the engineering units for the static pressure. Valid values are shown below. The units may only be changed if the transmitter is in off-line mode. Refer to register 40206 for the transmitter mode state.

Value = Units

2 = Pascals (Pa)

3 = kiloPascal (kPa)

4 = megaPascals (MPa)

5 = pounds per square inch (psi)

6 = inches of water at 68 F

7 = ftH2O

8 = atm

9 = bar

10 = kg/cm2

Tertiary Variable Units

Register(s) 40062 (30062) Read/Write
This register holds a value representing the engineering units for the RTD on a 4102MMT. Valid values are shown in the table. The units may only be changed if the transmitter is in off-line mode. Refer to register 40206 for the transmitter mode state.

20 = degrees Celsius (°C)

21 = degrees Fahrenheit (°F)

22 = degrees Kelvin (K)

23 = degrees Rankine(R)

Transmitter and Sensor

Manufacturer's Code

Register(s) 40001 (30001) Read Only
This register holds a constant value of 4000. This indicates the transmitter is manufactured by Schneider Electric.

Type Code

Register(s) 40002 (30002) Read Only
This register holds a value, type code, which indicates the model of the transmitter.

Software Revision Level

Register(s) 40003 (30003) Read Only
This register holds the revision number of the transmitter firmware.

Sensor Software Version Level

Register(s) 40004 (30004) Read Only

This register holds the version number of the sensor firmware. This is read from the sensor. It uses the format: MAJOR_VERSION * 100 + MINOR_VERSION. For example: 1.19 would be viewed as 119 in register 40004.

Transmitter Manufacture Date

Register(s) 40007 (30007) Read Only
Register 40007 holds the manufacture date as bits in the format YYYYYYYMMMMDDDDD,
YYYYYYY is the number of years since 1986. Add this number to 1986 to obtain the year of manufacture.
MMMM is the month of manufacture.
DDDDD is the day of manufacture

Transmitter Core Number

Register(s) 40008 (30008) Read Only

Register 40008 holds the core number. This is a number set when the sensor core is manufactured.

Sensor Hardware Version

Register(s) 40009 (30009) Read Only
This register holds the version number of the sensor hardware. This is read from the sensor.

Modbus Revision

Register(s) 40010 (30010) Read Only

This register holds the Modbus mapping and protocol revision. It is fixed at 1.

Sensor Type

Register(s) 40011 (30011) Read/Write
This register selects if the Static Pressure measures gage or absolute pressure. The sensor type can only be written for 4102 MVT transmitters.

The contents of registers 40011 and 30011 have different meanings. The transmitter must be placed in the off line mode before writing to this register.

For Register 40011:

A value of 1 means gage pressure. The gage pressure is calculated by measuring the absolute pressure and subtracting the contents of register 40399. The user sets the value in register 40399 for the gage pressure to be accurate. Note that this register can only be written to for 4102MMT transmitters.

A value of 0 means absolute pressure.

For Register 30011:

A value of 0 means gage pressure. The gage pressure is calculated by measuring the absolute pressure and subtracting the contents of register 40399. The user sets the value in register 40399 for the gage pressure to be accurate.

A value of 1 means absolute pressure.

Tag Name (8 characters)

Register(s) 40032 – 40035 (30032 - 30035) Read/Write

These registers hold the transmitter tag name. The tag name can be up to 8 characters. Two characters are stored in each register. Valid values are any ASCII character. See the table in the *Display Module ASCII Characters* section for useable ASCII characters.

Description (16 characters)

Register(s) 40036 – 40043 (30036 - 30043) Read/Write

These registers hold the transmitter description. The description can be up to 16 characters. Two characters are stored in each register. Valid values are any ASCII character. See the table in the *Display Module ASCII Characters* section for useable ASCII characters.

Message (32 characters)

Register(s) 40044 – 40059 (30044 - 30059) Read/Write

These registers hold the transmitter message. The message can be up to 32 characters. Two characters are stored in each register. Valid values are any ASCII character. See the table in the *Display Module ASCII Characters* section for useable ASCII characters.

Communications

Baud Rate

Register(s) 40015 Read/Write
This register holds the transmitter serial port baud rate. When this register changes it will update the serial port settings. The valid values are shown below.

Value = Units

5 = 1200

6 = 2400

7 = 4800

8 = 9600 (**default**)

9 = 19200

10 = 38400

Transmitter Address

Register(s) 40016 Read/Write
This register holds the transmitter Modbus address for the serial port and LAN port if installed.

Response Delay Time

Register(s) 40131 (30131) Read/Write
This register sets serial port response delay. The register specifies the delay from the normal response time. Valid values are 0 to 65535 milliseconds. The default value is 0 milliseconds.

Com1 Framing Errors

Register(s) 40145 (30145) Read Only
This register holds the number of framing errors on com1. This register is cleared when the controller is reset.

Com1 Parity Errors

Register(s) 40146 (30146) Read Only
This register holds the number of parity errors on com1. This register is cleared when the controller is reset.

Com1 Overrun Errors

Register(s) 40147 (30147) Read Only
This register holds the number of character-overrun errors on com1. This register is cleared when the controller is reset.

Com1 Modbus Checksum Errors

Register(s) 40148 (30148) Read Only
This register holds the number of Modbus checksum errors on com1. This register is cleared when the controller is reset.

Com1 Modbus Commands Received

Register(s) 40149 (30149) Read Only
This register holds the number of Modbus commands received on com1. This register is cleared when the controller is reset.

Com1 Modbus Responses Sent

Register(s) 40150 (30150) Read Only
This register holds the number of Modbus responses sent on com1. This register is cleared when the controller is reset.

LAN Modbus Checksum Errors

Register(s) 40154 (30154) Read Only
This register holds the number of Modbus checksum errors on the LAN connection. This register is cleared when the controller is reset.

LAN Modbus Commands Received

Register(s) 40155 (30155) Read Only
This register holds the number of Modbus commands received on the LAN connection. This register is cleared when the controller is reset.

LAN Modbus Responses Sent

Register(s) 40156 (30156) Read Only
This register holds the number of Modbus responses sent on the LAN connection. This register is cleared when the controller is reset.

Sensor Framing Errors

Register(s) 40157 (30157) Read Only
This register holds the number of framing errors on Sensor communication with the sensor electronics. This register is cleared when the controller is reset.

Sensor Parity Errors

Register(s) 40158 (30158) Read Only
This register holds the number of parity errors on Sensor communication with the sensor electronics. This register is cleared when the controller is reset.

Sensor Overrun Errors

Register(s) 40159 (30159) Read Only
This register holds the number of character-overrun errors on Sensor communication with the sensor electronics. This register is cleared when the controller is reset.

Sensor Checksum Errors

Register(s) 40160 (30160) Read Only
This register holds the number of checksum errors on Sensor communication with the sensor electronics. This register is cleared when the controller is reset.

Sensor Commands Sent

Register(s) 40161 (30161) Read Only
This register holds the number of Sensor commands sent to the sensor electronics. This register is cleared when the controller is reset.

Sensor Responses Received

Register(s) 40162 (30162) Read Only
This register holds the number of Sensor responses received from the sensor electronics. This register is cleared when the controller is reset.

LCD Display

The registers used for the LCD display have no effect on the 4012MPT or 4032 MPT transmitters.

Display Scan Interval

Register(s) 40126 Read/Write
This register controls the display scan interval. It will hold the value in seconds that each reading selected in the Display Control will remain on the display. Valid values will be integers between 2000 and 60000 ms.

Excessively writing to this register will wear out the EEPROM and then the display will not function properly.

Display Control

Register(s) 40128 Read/Write
This register controls which items are displayed on the display. This register is a bit-mapped field. The following shows the effects of individual bits. When a bit is turned on the floating point value and associated text will be cycled through on the display.

Bit 00 = Display DP in transmitter units
Bit 01 = Display SP in transmitter units
Bit 02 = Display PT in transmitter units
Bit 03 = Display Communication settings (baud rate and station number)
Bit 04 = Display 1st user defined data set
Bit 05 = Display 2nd user defined data set
Bit 06 = Display 3rd user defined data set
Bit 07 = Display 4th user defined data set
Bit 08 = Display 5th user defined data set
Bit 09 = Display 6th user defined data set
Bit 10 = Display 7th user defined data set
Bit 11 = Display 8th user defined data set

Bit 12 = Display 9th user defined data set
Bit 13 = Display 10th user defined data set
Bit 14 = Display 11th user defined data set
Bit 15 = Display 12th user defined data set

Excessively writing to this register will wear out the EEPROM and then the display will not function properly.

1st User Defined Display Value

Register(s) 40207 – 40208 Read/Write
These registers hold the floating-point value that will be included in the display cycle if the bit to display the 1st user defined data set is turned on in the Display Control register. Only values between –9999 and 99999 can be displayed. Any value outside of that range will be replaced by ----- (5 dashes) on the display. By default the display will show 5 dashes.

1st User Defined Display Text

Register(s) 40209 – 40215 Read/Write
These registers hold the text that will be included in the display cycle if the bit to display the 1st user defined data set is turned on in the Display Control register. Each register holds 2 ASCII characters. The first 7 ASCII characters will be displayed on line 2 of the display, followed by the second 7 ASCII characters. ***Table 0-3*** below lists the displayable characters.
On a power cycle these registers are reset to be spaces.

2nd User Defined Display Value

Register(s) 40216 – 40217 Read/Write
These registers hold the floating-point value that will be included in the display cycle if the bit to display the 2nd user defined data set is turned on in the Display Control register. Only values between –9999 and 99999 can be displayed. Any value outside of that range will be replaced by ----- (5 dashes) on the display. By default the display will show 5 dashes.

2nd User Defined Display Text

Register(s) 40218 – 40224 Read/Write
These registers hold the text that will be included in the display cycle if the bit to display the 2nd user defined data set is turned on in the Display Control register. Each register holds 2 ASCII characters. The first 7 ASCII characters will be displayed on line 2 of the display, followed by the second 7 ASCII characters. ***Table 0-3*** below lists the displayable characters.
On a power cycle these registers are reset to be spaces.

3rd User Defined Display Value

Register(s) 40225 – 40226 Read/Write
These registers hold the floating-point value that will be included in the display cycle if the bit to display the 3rd user defined data set is turned on in the Display Control register. Only values between –9999 and 99999 can be displayed. Any

value outside of that range will be replaced by ----- (5 dashes) on the display. By default the display will show 5 dashes.

3rd User Defined Display Text

Register(s) 40227 – 40233 Read/Write
These registers hold the text that will be included in the display cycle if the bit to display the 3rd user defined data set is turned on in the Display Control register. Each register holds 2 ASCII characters. The first 7 ASCII characters will be displayed on line 2 of the display, followed by the second 7 ASCII characters. ***Table 0-3*** below lists the displayable characters.
On a power cycle these registers are reset to be spaces.

4th User Defined Display Value

Register(s) 40234 – 40235 Read/Write
These registers hold the floating-point value that will be included in the display cycle if the bit to display the 4th user defined data set is turned on in the Display Control register. Only values between –9999 and 99999 can be displayed. Any value outside of that range will be replaced by ----- (5 dashes) on the display. By default the display will show 5 dashes.

4th User Defined Display Text

Register(s) 40236 – 40242 Read/Write
These registers hold the text that will be included in the display cycle if the bit to display the 4th user defined data set is turned on in the Display Control register. Each register holds 2 ASCII characters. The first 7 ASCII characters will be displayed on line 2 of the display, followed by the second 7 ASCII characters. ***Table 0-3*** below lists the displayable characters.
On a power cycle these registers are reset to be spaces.

5th User Defined Display Value

Register(s) 40243 – 40244 Read/Write
These registers hold the floating-point value that will be included in the display cycle if the bit to display the 5th user defined data set is turned on in the Display Control register. Only values between –9999 and 99999 can be displayed. Any value outside of that range will be replaced by ----- (5 dashes) on the display. By default the display will show 5 dashes.

5th User Defined Display Text

Register(s) 40245 – 40251 Read/Write
These registers hold the text that will be included in the display cycle if the bit to display the 5th user defined data set is turned on in the Display Control register. Each register holds 2 ASCII characters. The first 7 ASCII characters will be displayed on line 2 of the display, followed by the second 7 ASCII characters. ***Table 0-3*** below lists the displayable characters.
On a power cycle these registers are reset to be spaces.

6th User Defined Display Value

Register(s) 40252 – 40253 Read/Write
These registers hold the floating-point value that will be included in the display cycle if the bit to display the 6th user defined data set is turned on in the Display Control register. Only values between –9999 and 99999 can be displayed. Any value outside of that range will be replaced by ----- (5 dashes) on the display. By default the display will show 5 dashes.

6th User Defined Display Text

Register(s) 40254 – 40260 Read/Write
These registers hold the text that will be included in the display cycle if the bit to display the 6th user defined data set is turned on in the Display Control register. Each register holds 2 ASCII characters. The first 7 ASCII characters will be displayed on line 2 of the display, followed by the second 7 ASCII characters. ***Table 0-3*** below lists the displayable characters.
On a power cycle these registers are reset to be spaces.

7th User Defined Display Value

Register(s) 40261 – 40262 Read/Write
These registers hold the floating-point value that will be included in the display cycle if the bit to display the 7th user defined data set is turned on in the Display Control register. Only values between –9999 and 99999 can be displayed. Any value outside of that range will be replaced by ----- (5 dashes) on the display. By default the display will show 5 dashes.

7th User Defined Display Text

Register(s) 40263 – 40269 Read/Write
These registers hold the text that will be included in the display cycle if the bit to display the 7th user defined data set is turned on in the Display Control register. Each register holds 2 ASCII characters. The first 7 ASCII characters will be displayed on line 2 of the display, followed by the second 7 ASCII characters. ***Table 0-3*** below lists the displayable characters.
On a power cycle these registers are reset to be spaces.

8th User Defined Display Value

Register(s) 40270 – 40271 Read/Write
These registers hold the floating-point value that will be included in the display cycle if the bit to display the 8th user defined data set is turned on in the Display Control register. Only values between –9999 and 99999 can be displayed. Any value outside of that range will be replaced by ----- (5 dashes) on the display. By default the display will show 5 dashes.

8th User Defined Display Text

Register(s) 40272 – 40278 Read/Write
These registers hold the text that will be included in the display cycle if the bit to display the 8th user defined data set is turned on in the Display Control register. Each register holds 2 ASCII characters. The first 7 ASCII characters will be

displayed on line 2 of the display, followed by the second 7 ASCII characters. ***Table 0-3*** below lists the displayable characters.
On a power cycle these registers are reset to be spaces.

9th User Defined Display Value

Register(s) 40279 – 40280 Read/Write
These registers hold the floating-point value that will be included in the display cycle if the bit to display the 9th user defined data set is turned on in the Display Control register. Only values between –9999 and 99999 can be displayed. Any value outside of that range will be replaced by ----- (5 dashes) on the display. By default the display will show 5 dashes.

9th User Defined Display Text

Register(s) 40281 – 40287 Read/Write
These registers hold the text that will be included in the display cycle if the bit to display the 9th user defined data set is turned on in the Display Control register. Each register holds 2 ASCII characters. The first 7 ASCII characters will be displayed on line 2 of the display, followed by the second 7 ASCII characters. ***Table 0-3*** below lists the displayable characters.
On a power cycle these registers are reset to be spaces.

10th User Defined Display Value

Register(s) 40288 – 40289 Read/Write
These registers hold the floating-point value that will be included in the display cycle if the bit to display the 10th user defined data set is turned on in the Display Control register. Only values between –9999 and 99999 can be displayed. Any value outside of that range will be replaced by ----- (5 dashes) on the display. By default the display will show 5 dashes.

10th User Defined Display Text

Register(s) 40290 – 40296 Read/Write
These registers hold the text that will be included in the display cycle if the bit to display the 10th user defined data set is turned on in the Display Control register. Each register holds 2 ASCII characters. The first 7 ASCII characters will be displayed on line 2 of the display, followed by the second 7 ASCII characters. ***Table 0-3*** below lists the displayable characters.
On a power cycle these registers are reset to be spaces.

11th User Defined Display Value

Register(s) 40297 – 40298 Read/Write
These registers hold the floating-point value that will be included in the display cycle if the bit to display the 11th user defined data set is turned on in the Display Control register. Only values between –9999 and 99999 can be displayed. Any value outside of that range will be replaced by ----- (5 dashes) on the display. By default the display will show 5 dashes.

11th User Defined Display Text

Register(s) 40299 – 40305 Read/Write
These registers hold the text that will be included in the display cycle if the bit to display the 11th user defined data set is turned on in the Display Control register. Each register holds 2 ASCII characters. The first 7 ASCII characters will be displayed on line 2 of the display, followed by the second 7 ASCII characters. ***Table 0-3*** below lists the displayable characters.
On a power cycle these registers are reset to be spaces.

12th User Defined Display Value

Register(s) 40306 – 40307 Read/Write
These registers hold the floating-point value that will be included in the display cycle if the bit to display the 12th user defined data set is turned on in the Display Control register. Only values between –9999 and 99999 can be displayed. Any value outside of that range will be replaced by ----- (5 dashes) on the display. By default the display will show 5 dashes.

12th User Defined Display Text

Register(s) 40308 – 40314 Read/Write
These registers hold the text that will be included in the display cycle if the bit to display the 12th user defined data set is turned on in the Display Control register. Each register holds 2 ASCII characters. The first 7 ASCII characters will be displayed on line 2 of the display, followed by the second 7 ASCII characters. ***Table 0-3***below lists the displayable characters.
On a power cycle these registers are reset to be spaces.

Display Valid Time

Register(s) 40315 Read/Write
This register holds the number of minutes that display data will be valid for. Once this limit has been exceeded instead of displaying the normal user defined text line 1 will appear as dashes and line 2 will read READING UNAVAIL.

The range of valid values is 0 to 65535. A value of 0 means the user-defined text will be continuously displayed. Writing to the user defined display registers resets this timeout.

PID Controller

Enable

Register(s) 40451 Read/Write
This register is used to determine which variable is used as the process value for PID control.

0 = PID Control is disabled

1 = Primary variable is used as process value

2 = Secondary variable is used as process value

3 = Tertiary variable is used as process value

4 = Registers 40471 - 40472 are used as the process value.

Set Point

Register(s) 40452 – 40453 Read/Write
These registers hold the current set point for the PID control as a floating-point number in the specified floating-point format.

The setpoint is a floating-point value representing the desired value of the process value.

Gain

Register(s) 40454 – 40455 Read/Write
These registers hold the current gain setting for the PID control as a floating-point number in the specified floating-point format.

The proportional gain works as follows: A positive value of gain configures a forward-acting PID controller and a negative value of gain configures a reverse acting controller.

Reset Time

Register(s) 40456 – 40457 Read/Write
These registers hold the current reset time setting for the PID control as a floating-point number in the specified floating-point format.

The reset time, in seconds, controls the reset gain (or magnitude of integral action) in a PI or PID controller. Valid range is any value greater than 0.

Rate Time

Register(s) 40458 – 40459 Read/Write
These registers hold the current rate time setting for the PID control as a floating-point number in the specified floating-point format.

The rate time, in seconds, controls the rate gain (or magnitude of derivative action) in a PD or PID controller. Valid range is any value greater than 0.

Deadband

Register(s) 40460 – 40461 Read/Write
These registers hold the current deadband setting for the PID control as a floating-point number in the specified floating-point format

The setpoint deadband is used by the PID algorithm to determine if the process requires control outputs. If the absolute value of the error is less than the deadband, then the PID function skips execution of the control algorithm. This permits faster execution when the error is within a certain acceptable range or deadband. Valid range is any value greater than 0.

Full Scale Limit

Register(s) 40462 – 40463 Read/Write

These registers hold the current full-scale limit setting for the PID control as a floating-point number in the specified floating-point format.

The full scale limit setting is used in limiting the maximum output value of the PID control. If the PID algorithm calculates an output quantity that is greater than the value stored in full scale limit, the output quantity is set equal to the value stored in full scale limit. The full scale limit setting should always be greater than the zero scale limit setting. Valid values are between –8192 and 32767.

Zero Scale Limit

Register(s) 40464– 40465 Read/Write

These registers hold the current zero scale limit setting for the PID control as a floating-point number in the specified floating-point format.

The zero scale limit setting is used in limiting the minimum output value of the PID control. If the PID algorithm calculates an output quantity that is less than the value stored in zero scale limit, the output quantity is set equal to the value stored in zero scale limit. The zero scale limit setting should be less than the full scale limit setting. Valid values are between –8192 and 32767.

Cycle Time

Register(s) 40466 – 40467 Read/Write
These registers hold the current cycle time setting for the PID control as a floating-point number in the specified floating-point format.

The cycle time is the floating-point value of the PID algorithm execution period measured in seconds. Any value greater than or equal to 0.25 seconds (250 ms) may be specified.

Manual Output

Register(s) 40468 Read/Write
This register holds the current manual output setting for the PID control as an integer number.
The manual mode output is the value that the output is set to when the PID control is in manual mode. Valid values are between –8192 and 32767.

PID Operating Mode

Register(s) 40470 Read/Write
This register holds the current PID operating mode.

0 = Automatic PID control

1 = Manual PID control

User Defined Process Value

Register(s) 40471 – 40472 Read/Write
This register holds the process value that is used for PID calculations if register 40451 is set to use the User Defined Value.

Analog Output

Register(s) 40398 Read/Write
This register holds the value that is presently output on the analog output. This register is updated automatically if the PID control is operating. The analog output is a 4 to 20 mA output. Values from –8192 to 32767 will be represented by an output of 0 to 20mA.

((Modbus Register 40398 + 8192) / 40959) * 20.00 = 0 to 20mA output

The analog output is read-only when the PID controller is operational. The default value is 0. The output is set to the default value at reset. When the PID block is enabled the analog output register becomes read-only.

Diagnostics

Diagnostic Bits – Operating Limits

Register(s) 40407 (30119 and 30407) Read Only
This register holds a bit-mapped value. The individual bits correspond to these conditions.

Bit 15 = Calibration flag (see register 40206)

Bit 14 = The Process Variables may not be valid.

Bit 13 = Input(s) out of range or operating limits

Bit 12 = Primary signal above Upper Range Limit (URL) +10%

Bit 11 = Primary signal above Upper Range Limit (URL)

Bit 10 = Primary signal above Upper Operating Limit (URV)

Bit 09 = Primary signal below Lower Operating Limit (LRV)

Bit 08 = Primary signal below Lower Range Limit (LRL)

Bit 07 = Primary signal below Lower Range Limit (LRL) – 10%

Bit 06 = Secondary signal above Upper Range Limit (URL) +10%

Bit 05 = Secondary signal above Upper Range Limit (URL)

Bit 04 = Secondary signal above Upper Operating Limit (URV)

Bit 03 = Secondary signal below Lower Operating Limit (LRV)

Bit 02 = Secondary signal below Lower Range Limit (LRL)

Bit 01 = Secondary signal below Lower Range Limit (LRL) – 10%

Bit 00 = N/A

Diagnostic Bits – Range Limits

Register(s) 40408 (30120 and 30408) Read Only
This register holds a bit-mapped value. The individual bits correspond to these conditions.

Bit 15 = N/A

Bit 14 = Tertiary signal above Upper Range Limit (URL) +10%

Bit 13 = Tertiary signal above Upper Range Limit (URL)

Bit 12 = Tertiary signal above Upper Operating Limit (URV)

Bit 11 = Tertiary signal below Lower Operating Limit (LRV)

Bit 10 = Tertiary signal below Lower Range Limit (LRL)

Bit 09 = Tertiary signal below Lower Range Limit (LRL) – 10%

Bit 08 = N/A

Bit 07 = Primary variable is bad.

Bit 06 = Secondary variable is bad

Bit 05 = Tertiary variable is bad

Bit 04 = Reserved

Bit 03 = Reserved

Bit 02 = Reserved

Bit 01 = Reserved

Bit 00 = Off-line Flag (see register 40206)

Diagnostic Bits – Sensor and Hardware Protect

Register(s) 40409 (30121 and 30409) Read Only
This register holds a bit-mapped value. The individual bits correspond to these conditions.

Bit 15 = Sensor module is not updating

Bit 14 = reserved

Bit 13 = Sensor microprocessor is not responding

Bit 12 = reserved

Bit 11 = reserved

Bit 10 = reserved

Bit 09 = reserved

Bit 08 = RTD Offset is outside normal range. The RTD should be checked for Physical damage if this bit is enabled. Comparing RTD results with a known good RTD and checking the resistance between the RTD and case is recommended.

Bit 07 = reserved

Bit 06 = reserved

Bit 05 = reserved

Bit 04 = reserved

Bit 03 = reserved

Bit 02 = reserved

Bit 01 = Hardware write protect status

Bit 00 = reserved

Modbus Register Database (40001 – 40500)

The table of Modbus registers in this section of the manual describes transmitter parameters that are assigned to Modbus registers. The registers defined may be read only or read and write registers. The Read/Write column in the tables indicates the register type.

- **Read** indicates the register is read only.
- **Read/Write** indicates the register may be read or written to.

The Type column describes the format of the Modbus register.

- **Integer** is an unsigned integer in the range 0 to 65535.
- **Float** is a floating-point number in the IEEE 754 format. Numbers are made up of one sign bit (S), eight exponent bits (E), and twenty-three mantissa bits (M). A number consists of 4 bytes as shown below.

Byte A Byte B Byte C Byte D

SEEE EEEE EMMM MMMM MMMM MMMM MMMM MMMM

- Floating-point values are stored in two consecutive registers. Both registers must be read or written in the same Modbus command.
- **ASCII** is two characters are stored in each register. Valid values are any ASCII character. The first character is in the low order byte, the second in the high order byte.
- The string is terminated with a NULL (= 0) character if it is less than 8 characters. Set the first register to 0 to indicate a NULL (empty) string.

Table 0-1: Modbus Register Database

Primary Register	Alternate Register	Type	Read/ Write	Parameter
40001	30001	Integer	Read	Manufacturer's Code This register holds a constant value of 4000. This indicates the transmitter is manufactured by Schneider Electric.

Primary Register	Alternate Register	Type	Read/ Write	Parameter
40002	30002	Integer	Read	Type Code This register holds a value, type code, which indicates the model of the transmitter. Type Code — SCADAPack 4000 Model 41020 — 4102MMT 41021 — 4102MMT 40120 — 4012MPT 40121 — 4012MPT 40122 — 4012MPT 40123 — 4012MPT 40320 — 4032MPT 40321 — 4032MPT
40003	30003	Integer	Read	Software Revision Level This register holds the revision number of the transmitter firmware.
40004	30004	Integer	Read	Sensor Software Version Level This register holds the version number of the sensor firmware. This is read from the sensor. It uses the format: MAJOR_VERSION * 100 + MINOR_VERSION. For example: 1.19 would be viewed as 119 in register 40004.
40005 - 40006	None			Reserved
40007	30007	Integer	Read	Transmitter Manufacture Date Register 40007 holds the manufacture date as bits in the format : YYYYYYY MMMM DDDDD YYYYYYY is the number of years since 1986. Add this number to 1986 to obtain the year of manufacture. MMMM is the month of manufacture. DDDDD is the day of manufacture.
40008	30008	Integer	Read	Transmitter Core Number This is a number set when the sensor core is manufactured.
40009	30009	Integer	Read	Sensor Hardware Version This register holds the version number of the sensor hardware. This is read from the sensor.
40010	30010	Integer	Read	Modbus Revision

Primary Register	Alternate Register	Type	Read/ Write	Parameter
				This register holds the Modbus mapping and protocol revision. It is fixed at 1.
40011	30011	Integer	Read/ Write	Sensor Type This register selects if the Static Pressure measures gage or absolute pressure. This register can only be written to on 4102MMT transmitters. The transmitter must be placed in the Off Line mode prior to writing to register 40011 or 30011. Registers 40011 and 30011 have different meanings. For Register 40011: A value of 1 means gage pressure. The gage pressure is calculated by measuring the absolute pressure and subtracting the contents of register 40399. The user must set the value in register 40399 for the gage pressure to be accurate. A value of 0 means absolute pressure. For Register 30011: A value of 0 means gage pressure. The gage pressure is calculated by measuring the absolute pressure and subtracting the contents of register 40399. The user must set the value in register 40399 for the gage pressure to be accurate. A value of 1 means absolute pressure.
40012 - 40014	None			Reserved
40015	None	Integer	Read/ Write	Baud rate This register holds the serial port baud rate for the transmitter. When this register changes it will update the serial port settings. The valid values are shown below. 5 = 1200 6 = 2400 7 = 4800 8 = 9600 (default) 9 = 19200 10 = 38400

Primary Register	Alternate Register	Type	Read/ Write	Parameter
40016	None	Integer	Read/ Write	Transmitter Address This register holds the transmitter Modbus address for the serial port and LAN port if installed.
40018 - 40031	None			Reserved
40032 - 40035	30032 – 30035	ASCII	Read/ Write	Tag Name (8 characters) These registers hold the transmitter tag name. The tag name can be up to 8 characters. Two characters are stored in each register. Valid values are any ASCII character.
40036 - 40043	30036 - 30043	ASCII	Read/ Write	Description (16 characters) These registers hold the transmitter description. The description can be up to 16 characters. Two characters are stored in each register. Valid values are any ASCII character.
40044 - 40059	30044 - 30059	ASCII	Read/ Write	Message (32 characters) These registers hold the transmitter message. The message can be up to 32 characters. Two characters are stored in each register. Valid values are any ASCII character.
40060	30060	Integer	Read/ Write	Primary Variable Units This register holds a value representing the engineering units for the primary variable. The primary variable is differential pressure for the 4102MMT, and 4032MPT. The primary variable is static pressure for the 4012MPT. The units may only be changed if the transmitter is in off-line mode. Refer to register 40206 for the transmitter mode state. 2 = Pascals (Pa) 3 = kiloPascal (kPa) 4 = megaPascals (MPa) 5 = pounds per square inch (psi) 6 = inches of water at 68 F 7 = ftH2O 8 = atm 9 = bar 10 = kg/cm2 11 = g/cm2

Primary Register	Alternate Register	Type	Read/ Write	Parameter
				12 = cmHg 13 = mmHg 14 = torr 15 = mH2O (Only for 4102MMT) 16 = cmH2O 17 = mmH2O 18 = inHg 19 = mbar 30 = dy/cm2 (only for 4012MPT and 4032MPT).
40061	30061	Integer	Read/ Write	Secondary Variable Units This register is only implemented on the 4102MMT. This register holds a value representing the engineering units for the static pressure. Valid values are shown in the table. The units may only be changed if the transmitter is in off-line mode. Refer to register 40206 for the transmitter mode state. Value Units 2 = Pascal (Pa) 3 = kiloPascal (kPa) 4 = megaPascal (MPa) 5 = pounds per square inch (psi) 6 = inches of water at 68 F 7 = ftH2O 8 = atm 9 = bar 10 = kg/cm2 11 = g/cm2 12 = cmHg 13 = mmHg 14 = torr 15 = mH2O 16 = cmH2O 17 = mmH2O 18 = inHg 19 = mbar
40062	30062	Integer	Read/ Write	Tertiary Variable Units This register holds a value representing the engineering units for the RTD on a 4102MMT. Valid values are shown in

Primary Register	Alternate Register	Type	Read/ Write	Parameter
				the table. The units may only be changed if the transmitter is in off-line mode. Refer to register 40206 for the transmitter mode state. 20 = degrees Celsius (°C) 21 = degrees Fahrenheit (°F) 22 = degrees Kelvin (K) 23 = degrees Rankine(R)
40063 – 40115	None			Reserved
40116	None	Integer	Read	Primary Variable Integer Value This register holds the primary variable as an integer number. The diagnostic bits indicate the validity of this register.
40117	None	Integer	Read	Secondary Variable Integer Value This register holds the secondary variable as an integer number. The diagnostic bits indicate the validity of this register.
40118	None	Integer	Read	Tertiary Variable Integer Value This register holds the tertiary variable as an integer number. The diagnostic bits indicate the validity of this register.
40119	None	Integer	Read/ Write	Process Variable Integer Register Mode This register controls if negative values are allowed in registers 40116 to 40118. Valid values are 0 and 1. The default value is 0. 0 = allow negative numbers 1 = assign zero if the value is less than zero.
40120 – 40125	None			Reserved
40126	None	Integer	Read/ Write	Display Scan Interval This register controls the display scan interval. It will hold the value in seconds that each reading selected in the Display Control will remain on the display. Valid values will be integers between 2000 and 60000 ms. Excessively writing to this register will wear out the EEPROM and then the display will not function properly.
40127	None			Reserved

Primary Register	Alternate Register	Type	Read/ Write	Parameter
40128	None	Bit field	Read/ Write	Display Control This register controls which items are displayed on the display. This register is a bit-mapped field. The following shows the effects of individual bits. When a bit is turned on the floating point value and associated text will be cycled through on the display. Bit 00 = Display DP in transmitter units Bit 01 = Display SP in transmitter units Bit 02 = Display PT in transmitter units Bit 03 = Display Communication settings (baud rate and station number) Bit 04 = Display 1st user defined data set Bit 05 = Display 2nd user defined data set Bit 06 = Display 3rd user defined data set Bit 07 = Display 4th user defined data set Bit 08 = Display 5th user defined data set Bit 09 = Display 6th user defined data set Bit 10 = Display 7th user defined data set Bit 11 = Display 8th user defined data set Bit 12 = Display 9th user defined data set Bit 13 = Display 10th user defined data set Bit 14 = Display 11th user defined data set Bit 15 = Display 12th user defined data set Excessively writing to this register will wear out the EEPROM and then the display will not function properly.
40129 – 40130	None			Reserved
40131	30131	Integer	Read/ Write	Response Delay Time This register sets serial port response delay. The register specifies the delay

Primary Register	Alternate Register	Type	Read/ Write	Parameter
				from the normal response time. Valid values are 0 to 65535 milliseconds. The default value is 0 milliseconds.
40132	None	Integer	Read/ Write	Floating Point Format This register is included for 3095FB compatibility only. The floating-point format is fixed. This register specifies the byte order of floating-point registers. Floating-point numbers are in the IEEE 754 format. Numbers are made up of one sign bit (S), eight exponent bits (E), and twenty-three mantissa bits (M). A number consists of 4 bytes as shown below. Byte A Byte B Byte C Byte D SEEE EEEE EMMM MMMM MMMM MMMM MMMM MMMM The only valid value is 0. The register will return 0 when read. 0 = A B C D (default, Realflo format) 1 = C D A B (not available) 2 = D C B A (not available) 3 = B A D C (not available)
40133 - 40144	None			Reserved
40145	30145	Integer	Read	Com1 Framing Errors This register holds the number of framing errors on com1. This register is cleared when the controller is reset.
40146	30146	Integer	Read	Com1 Parity Errors This register holds the number of parity errors on com1. This register is cleared when the controller is reset.
40147	30147	Integer	Read	Com1 Overrun Errors This register holds the number of character-overrun errors on com1. This register is cleared when the controller is reset.
40148	30148	Integer	Read	Com1 Modbus Checksum Errors This register holds the number of Modbus checksum errors on com1. This register is cleared when the controller is reset.
40149	30149	Integer	Read	Com1 Modbus Commands Received

Primary Register	Alternate Register	Type	Read/ Write	Parameter
				This register holds the number of Modbus commands received on com1. This register is cleared when the controller is reset.
40150	30150	Integer	Read	Com1 Modbus Responses Sent This register holds the number of Modbus responses sent on com1. This register is cleared when the controller is reset.
40151	None			Reserved
40152	None			Reserved
40153	None			Reserved
40154	30154	Integer	Read	LAN Modbus Checksum Errors This register holds the number of Modbus checksum errors on the LAN connection. This register is cleared when the controller is reset.
40155	30155	Integer	Read	LAN Modbus Commands Received This register holds the number of Modbus commands received on the LAN connection. This register is cleared when the controller is reset.
40156	30156	Integer	Read	LAN Modbus Responses Sent This register holds the number of Modbus responses sent on the LAN connection. This register is cleared when the controller is reset.
40157	30157	Integer	Read	Sensor Framing Errors This register holds the number of framing errors on Sensor communication with the sensor electronics. This register is cleared when the controller is reset.
40158	30158	Integer	Read	Sensor Parity Errors This register holds the number of parity errors on Sensor communication with the sensor electronics. This register is cleared when the controller is reset.
40159	30159	Integer	Read	Sensor Overrun Errors This register holds the number of character-overrun errors on Sensor communication with the sensor electronics. This register is cleared when the controller is reset.

Primary Register	Alternate Register	Type	Read/ Write	Parameter
40160	30160	Integer	Read	Sensor Checksum Errors This register holds the number of checksum errors on Sensor communication with the sensor electronics. This register is cleared when the controller is reset.
40161	30161	Integer	Read	Sensor Commands Sent This register holds the number of Sensor commands sent to the sensor electronics. This register is cleared when the controller is reset.
40162	30162	Integer	Read	Sensor Responses Received This register holds the number of Sensor responses received from the sensor electronics. This register is cleared when the controller is reset.
40164 – 40203	None			Reserved
40204	30204	Integer	Read	Scaled Integer Method This register is included only for 3095 compatibility. Scaled integers are not supported. The only valid value is 0. The register will return 0 when read.
40205	None	Integer	Read/ Write	Reset to Default Parameters Writing to this register resets the transmitter to default parameters. The transmitter calibration is reset to full scale with an offset of zero. The transmitter should be re-zeroed after this action and readings verified. Respanning the device may be required. A sequence of three numbers is written to the register to cause a reset. This prevents accidental modification of the register from resetting the parameters. Use the following procedure to reset the parameters. Write the value 493 to the register. Write the value 27254 to the register. Write the value 6003 to the register. To abort the sequence once it is started write any value other than the next value in the sequence.

Primary Register	Alternate Register	Type	Read/ Write	Parameter
				See Table 0-2 for default values. This register is set to 0 on every power cycle.
40206	None	Integer	Read/ Write	Sensor Operating Mode This register controls the operating mode of the transmitter: online mode, offline mode, or calibrate mode. Process values are updated only in the online mode. Place the system is in a safe state before switching to offline or calibrate mode. This register must be set to offline mode before changing engineering units, re-ranging the transmitter, changing the sensor type (4102 only), or changing the atmospheric reference (4102 only). This register must be set to calibration mode before changing the span or the zero. This register must be in either offline mode or calibrate mode before changing the damping values. Changes are not applied until the unit is placed online. Valid values shown below. The default value is 0 (online). 0 = online mode, normal operation 63 = offline mode, change engineering units, re-range transmitter, change damping values, change the sensor type (4102 only), or change the atmospheric reference (4102 only) 255 = calibrate mode, change zero, span or damping values The display will indicate OFFLINE when the transmitter is in the offline or calibrate modes. The display will operate normally in the online mode. When the transmitter is in off-line mode the only valid mode change is to on-line mode. This register is cleared when the power is lost to the transmitter. The transmitter starts in online mode. If power is lost while in either calibration

Primary Register	Alternate Register	Type	Read/ Write	Parameter
				or offline mode the transmitter may report incorrect measurement values. Should this occur put the transmitter in offline mode and write a valid DP Damping value. The transmitter will now need to be returned to online mode to complete the recovery. When the transmitter is placed online it may take up to 10 seconds to refresh the readings. The transmitter will not respond to Modbus commands until the readings are refreshed.
40207 – 40208	None	Float	Read/ Write	1st User Defined Display Value These registers hold the floating-point value that will be included in the display cycle if the bit to display the 1st user defined data set is turned on in the Display Control register. Only values between –9999 and 99999 can be displayed. Any value outside of that range will be replaced by ----- (5 dashes) on the display. By default the display will show 5 dashes.
40209 – 40215	None	ASCII	Read/ Write	1st User Defined Display Text These registers hold the text that will be included in the display cycle if the bit to display the 1st user defined data set is turned on in the Display Control register. Each register holds 2 ASCII characters. The first 7 ASCII characters will be displayed on line 2 of the display, followed by the second 7 ASCII characters. Table 0-3 below lists the displayable characters. On a power cycle these registers are reset to be spaces.
40216 – 40217	None	Float	Read/ Write	2nd User Defined Display Value These registers hold the floating-point value that will be included in the display cycle if the bit to display the 2nd user defined data set is turned on in the Display Control register. Only values between –9999 and 99999 can be displayed. Any value outside of that range will be replaced by ----- (5 dashes) on the display. By default the

Primary Register	Alternate Register	Type	Read/ Write	Parameter
				display will show 5 dashes.
40218 – 40224	None	ASCII	Read/ Write	2nd User Defined Display Text These registers hold the text that will be included in the display cycle if the bit to display the 2nd user defined data set is turned on in the Display Control register. Each register holds 2 ASCII characters. The first 7 ASCII characters will be displayed on line 2 of the display, followed by the second 7 ASCII characters. Table 0-3 below lists the displayable characters. On a power cycle these registers are reset to be spaces.
40225 – 40226	None	Float	Read/ Write	3rd User Defined Display Value These registers hold the floating-point value that will be included in the display cycle if the bit to display the 3rd user defined data set is turned on in the Display Control register. Only values between –9999 and 99999 can be displayed. Any value outside of that range will be replaced by ----- (5 dashes) on the display. By default the display will show 5 dashes.
40227 – 40233	None	ASCII	Read/ Write	3rd User Defined Display Text These registers hold the text that will be included in the display cycle if the bit to display the 3rd user defined data set is turned on in the Display Control register. Each register holds 2 ASCII characters. The first 7 ASCII characters will be displayed on line 2 of the display, followed by the second 7 ASCII characters. Table 0-3 below lists the displayable characters. On a power cycle these registers are reset to be spaces.
40234 – 40235	None	Float	Read/ Write	4th User Defined Display Value These registers hold the floating-point value that will be included in the display cycle if the bit to display the 4th user defined data set is turned on in the Display Control register. Only values between –9999 and 99999 can be displayed. Any value outside of that

Primary Register	Alternate Register	Type	Read/ Write	Parameter
				range will be replaced by ----- (5 dashes) on the display. By default the display will show 5 dashes.
40236 – 40242	None	ASCII	Read/ Write	4th User Defined Display Text These registers hold the text that will be included in the display cycle if the bit to display the 4th user defined data set is turned on in the Display Control register. Each register holds 2 ASCII characters. The first 7 ASCII characters will be displayed on line 2 of the display, followed by the second 7 ASCII characters. Table 0-3 below lists the displayable characters. On a power cycle these registers are reset to be spaces.
40243 – 40244	None	Float	Read/ Write	5th User Defined Display Value These registers hold the floating-point value that will be included in the display cycle if the bit to display the 5th user defined data set is turned on in the Display Control register. Only values between –9999 and 99999 can be displayed. Any value outside of that range will be replaced by ----- (5 dashes) on the display. By default the display will show 5 dashes.
40245 – 40251	None	ASCII	Read/ Write	5th User Defined Display Text These registers hold the text that will be included in the display cycle if the bit to display the 5th user defined data set is turned on in the Display Control register. Each register holds 2 ASCII characters. The first 7 ASCII characters will be displayed on line 2 of the display, followed by the second 7 ASCII characters. Table 0-3 below lists the displayable characters. On a power cycle these registers are reset to be spaces.
40252 – 40253	None	Float	Read/ Write	6th User Defined Display Value These registers hold the floating-point value that will be included in the display cycle if the bit to display the 6th user defined data set is turned on in the Display Control register. Only values

Primary Register	Alternate Register	Type	Read/ Write	Parameter
				between –9999 and 99999 can be displayed. Any value outside of that range will be replaced by ----- (5 dashes) on the display. By default the display will show 5 dashes.
40254 – 40260	None	ASCII	Read/ Write	6th User Defined Display Text These registers hold the text that will be included in the display cycle if the bit to display the 6th user defined data set is turned on in the Display Control register. Each register holds 2 ASCII characters. The first 7 ASCII characters will be displayed on line 2 of the display, followed by the second 7 ASCII characters. Table 0-3 below lists the displayable characters. On a power cycle these registers are reset to be spaces.
40261 – 40262	None	Float	Read/ Write	7th User Defined Display Value These registers hold the floating-point value that will be included in the display cycle if the bit to display the 7th user defined data set is turned on in the Display Control register. Only values between –9999 and 99999 can be displayed. Any value outside of that range will be replaced by ----- (5 dashes) on the display. By default the display will show 5 dashes.
40263 – 40269	None	ASCII	Read/ Write	7th User Defined Display Text These registers hold the text that will be included in the display cycle if the bit to display the 7th user defined data set is turned on in the Display Control register. Each register holds 2 ASCII characters. The first 7 ASCII characters will be displayed on line 2 of the display, followed by the second 7 ASCII characters. Table 0-3 below lists the displayable characters. On a power cycle these registers are reset to be spaces.
40270 – 40271	None	Float	Read/ Write	8th User Defined Display Value These registers hold the floating-point value that will be included in the display cycle if the bit to display the 8th user

Primary Register	Alternate Register	Type	Read/ Write	Parameter
				defined data set is turned on in the Display Control register. Only values between –9999 and 99999 can be displayed. Any value outside of that range will be replaced by ----- (5 dashes) on the display. By default the display will show 5 dashes.
40272 – 40278	None	ASCII	Read/ Write	8th User Defined Display Text These registers hold the text that will be included in the display cycle if the bit to display the 8th user defined data set is turned on in the Display Control register. Each register holds 2 ASCII characters. The first 7 ASCII characters will be displayed on line 2 of the display, followed by the second 7 ASCII characters. Table 0-3 below lists the displayable characters. On a power cycle these registers are reset to be spaces.
40279 – 40280	None	Float	Read/ Write	9th User Defined Display Value These registers hold the floating-point value that will be included in the display cycle if the bit to display the 9th user defined data set is turned on in the Display Control register. Only values between –9999 and 99999 can be displayed. Any value outside of that range will be replaced by ----- (5 dashes) on the display. By default the display will show 5 dashes.
40281 – 40287	None	ASCII	Read/ Write	9th User Defined Display Text These registers hold the text that will be included in the display cycle if the bit to display the 9th user defined data set is turned on in the Display Control register. Each register holds 2 ASCII characters. The first 7 ASCII characters will be displayed on line 2 of the display, followed by the second 7 ASCII characters. Table 0-3 below lists the displayable characters. On a power cycle these registers are reset to be spaces.
40288 – 40289	None	Float	Read/ Write	10th User Defined Display Value These registers hold the floating-point

Primary Register	Alternate Register	Type	Read/ Write	Parameter
				value that will be included in the display cycle if the bit to display the 10th user defined data set is turned on in the Display Control register. Only values between –9999 and 99999 can be displayed. Any value outside of that range will be replaced by ----- (5 dashes) on the display. By default the display will show 5 dashes.
40290 – 40296	None	ASCII	Read/ Write	10th User Defined Display Text These registers hold the text that will be included in the display cycle if the bit to display the 10th user defined data set is turned on in the Display Control register. Each register holds 2 ASCII characters. The first 7 ASCII characters will be displayed on line 2 of the display, followed by the second 7 ASCII characters. Table 0-3 below lists the displayable characters. On a power cycle these registers are reset to be spaces.
40297 – 40298	None	Float	Read/ Write	11th User Defined Display Value These registers hold the floating-point value that will be included in the display cycle if the bit to display the 11th user defined data set is turned on in the Display Control register. Only values between –9999 and 99999 can be displayed. Any value outside of that range will be replaced by ----- (5 dashes) on the display. By default the display will show 5 dashes.
40299 – 40305	None	ASCII	Read/ Write	11th User Defined Display Text These registers hold the text that will be included in the display cycle if the bit to display the 11th user defined data set is turned on in the Display Control register. Each register holds 2 ASCII characters. The first 7 ASCII characters will be displayed on line 2 of the display, followed by the second 7 ASCII characters. Table 0-3 below lists the displayable characters. On a power cycle these registers are reset to be spaces.

Primary Register	Alternate Register	Type	Read/ Write	Parameter
40306 – 40307	None	Float	Read/ Write	12th User Defined Display Value These registers hold the floating-point value that will be included in the display cycle if the bit to display the 12th user defined data set is turned on in the Display Control register. Only values between –9999 and 99999 can be displayed. Any value outside of that range will be replaced by ----- (5 dashes) on the display. By default the display will show 5 dashes.
40308 – 40314	None	ASCII	Read/ Write	12th User Defined Display Text These registers hold the text that will be included in the display cycle if the bit to display the 12th user defined data set is turned on in the Display Control register. Each register holds 2 ASCII characters. The first 7 ASCII characters will be displayed on line 2 of the display, followed by the second 7 ASCII characters. Table 0-3below lists the displayable characters. On a power cycle these registers are reset to be spaces.
40315	None	Integer	Read/ Write	Display Valid Time This register holds the number of minutes that display data will be valid for. Once this limit has been exceeded instead of displaying the normal user defined text line 1 will appear as dashes and line 2 will read READING UNAVAIL. The range of valid values is 0 to 65535. A value of 0 means the user-defined text will be displayed continuously. Writing to the user defined display registers resets this timeout.
40316	None	Integer	Read/ Write	Lockout Register This register can be used to prevent writing to other database registers. When a non-zero value is entered in this register the other registers, except the Analog Output and PID Controller registers, will become read-only. When a value of 0 is entered in this register registers revert to their normal

Primary Register	Alternate Register	Type	Read/ Write	Parameter
				read/write status. There is also a hardware write protect jumper. Refer to the Write Protect Jumper section for more details. This register is set to 0 (disabled) at power-up.
40317 – 40392				Reserved
40393 - 40394	30393 – 30394	Float	Read	Sensor Temperature Sensor temperature in degrees C.
40395 - 40396	30395 - 30396	Float	Read	Electronics Temperature Electronics temperature in degrees C for 4102MMT only.
40397	30397	Integer	Read	Input Voltage This register holds the input voltage in mV. This register is read-only.
40398	None	Integer	Read/ Write	Analog Output This register holds the value that is presently output on the analog output. This register is updated automatically if the PID control is operating. The analog output is a 4 to 20 mA output. Values from –8192 to 32767 will be represented by an output of 0 to 20mA. The analog output is read-only when the PID controller is operational. The default value is 0. The output is set to the default value at reset. When the PID block is enabled the analog output register becomes read-only.
40399 - 40400	None	Float	Read/ Write	Atmospheric Pressure These registers hold the user-specified atmospheric pressure as a floating-point number in the specified floating-point format. This value is used when the sensor type is set to gage using register 40011. This value is ignored if the sensor type is set to absolute. The value in this register is in the same units as the static pressure. The transmitter must be in the offline mode to change this register. No change will be made if the transmitter mode is not correct. The transmitter must be returned to online mode after

Primary Register	Alternate Register	Type	Read/ Write	Parameter
				the atmospheric pressure reference is changed.
40401 - 40402	30401 – 30402	Float	Read	Primary Variable Value These registers hold the primary variable as a floating-point number in the specified floating-point format. The diagnostic bits indicate the validity of this register.
40403 - 40404	30403 – 30404	Float	Read	Secondary Variable Value These registers hold the secondary variable as a floating-point number in the specified floating-point format. The diagnostic bits indicate the validity of this register.
40405 - 40406	30405 - 30406	Float	Read	Tertiary Variable Value These registers hold the tertiary variable as a floating-point number in the specified floating-point format. The diagnostic bits indicate the validity of this register.
40407	30119 30407	Integer	Read	Diagnostic Bits This register holds a bit-mapped value. The individual bits correspond to these conditions. 15 Calibration flag (see register 40206) 14 The process values may not be valid - If this bit is the only bit set then contact Technical Suppo 13 Primary Variables are outside Specification 12 DP signal above Upper Range Limit (URL) +10% 11 DP signal above Upper Range Limit (URL) 10 DP signal above Upper Operating Limit (URV) 9 DP signal below Lower Operating Limit (LRV) 8 DP signal below Lower Range Limit (LRL)

Primary Register	Alternate Register	Type	Read/ Write	Parameter
				7 DP signal below Lower Range Limit (LRL) – 10% 6 SP signal above Upper Range Limit (URL) +10% 5 SP signal above Upper Range Limit (URL) 4 SP signal above Upper Operating Limit (URV) 3 SP signal below Lower Operating Limit (LRV) 2 SP signal below Lower Range Limit (LRL) 1 SP signal below Lower Range Limit (LRL) – 10% 0 N/A
40408	30120 30408	Integer	Read	Diagnostic Bits This register holds a bit-mapped value. The individual bits correspond to these conditions. Bit 15 = N/A Bit 14 = Tertiary signal above Upper Range Limit (URL) +10% Bit 13 = Tertiary signal above Upper Range Limit (URL) Bit 12 = Tertiary signal above Upper Operating Limit (URV) Bit 11 = Tertiary signal below Lower Operating Limit (LRV) Bit 10 = Tertiary signal below Lower Range Limit (LRL) Bit 09 = Tertiary signal below Lower Range Limit (LRL) – 10% Bit 08 = N/A Bit 07 = Primary variable is bad. Bit 06 = Secondary variable is bad Bit 05 = Tertiary variable is bad Bit 04 = Reserved Bit 03 = Reserved Bit 02 = Reserved Bit 01 = Reserved Bit 00 = Off-line Flag (see register

Primary Register	Alternate Register	Type	Read/ Write	Parameter
				40206)
40409	30121 30409	Integer	Read	Diagnostic Bits This register holds a bit-mapped value. The individual bits correspond to these conditions. Bit 15 = Sensor module is not updating Bit 14 = reserved Bit 13 = Sensor microprocessor is not responding Bit 12 = reserved Bit 11 = reserved Bit 10 = reserved Bit 09 = reserved Bit 08 = RTD Offset is outside normal range. The RTD should be checked for physical damage if this bit is enabled. Comparing RTD results with a known good RTD and checking the resistance between the RTD and case is recommended. Bit 07 = reserved Bit 06 = reserved Bit 05 = reserved Bit 04 = reserved Bit 03 = reserved Bit 02 = reserved Bit 01 = Hardware write protect status Bit 00 = reserved
40410	30122 30410	Integer	Read	Diagnostic Bits This register is reserved for future diagnostic bits. This register contains 0.
40411	30123 30411	Integer	Read	Diagnostic Bits This register is reserved for future diagnostic bits. This register contains 0.
40412	30124 30412	Integer	Read	Diagnostic Bits This register is reserved for future diagnostic bits. This register contains 0.
40413 - 40414	30413 – 30414	Float	Read	Primary Variable Upper Range Limit These registers hold the primary variable upper Range Limit as a floating-point number in the specified floating-point format.

Primary Register	Alternate Register	Type	Read/ Write	Parameter
40415 - 40416	30415 - 30416	Float	Read	Primary Variable Lower Range Limit These registers hold the primary variable lower Range Limit as a floating-point number in the specified floating-point format.
40417 - 40418	30417 - 30418	Float	Read/ Write	Primary Variable Upper Operating Limit These registers hold the primary variable upper operating limit as a floating-point number in the specified floating-point format. The transmitter must be in the offline mode to change this register. No change will be made if the transmitter mode is not correct. The primary variable upper operating limit may be set higher than the primary variable upper range limit. The primary variable upper operating limit my be set as high as 1.5 times the primary variable upper range limit, provided that the difference between the primary variable UOL and primary variable LOL is no larger than the difference between the primary variable URL and primary variable LRL. The difference between the primary variable UOL and primary variable LOL must also be larger than 1% of the primary variable URL.
40419 - 40420	30419 - 30420	Float	Read/ Write	Primary Variable Lower Operating Limit These registers hold the primary variable lower operating limit as a floating-point number in the specified floating-point format. The transmitter must be in the offline mode to change this register. No change will be made if the transmitter mode is not correct. The primary variable lower operating limit may be set lower than the primary variable lower range limit. The primary variable lower operating limit my be set as low as 1.5 times the primary variable lower range limit, provided that the difference between the primary variable UOL and primary variable LOL is no larger than the difference between the

Primary Register	Alternate Register	Type	Read/ Write	Parameter
				primary variable URL and primary variable LRL. The difference between the primary variable UOL and primary variable LOL must also be larger than 1% of the primary variable URL.
40421 - 40422	30421 – 30422	Float	Read	Secondary Variable Upper Range Limit These registers hold the secondary variable upper Range Limit as a floating-point number in the specified floating-point format.
40423 - 40424	30423 – 30424	Float	Read	Secondary Variable Lower Range Limit These registers hold the secondary variable lower Range Limit as a floating-point number in the specified floating-point format.
40425 - 40426	30425 – 30426	Float	Read/ Write	Secondary Variable Upper Operating Limit These registers hold the secondary variable upper operating limit as a floating-point number in the specified floating-point format. The transmitter must be in the offline mode to change this register. No change will be made if the transmitter mode is not correct. The secondary variable upper operating limit may be set higher than the secondary variable upper range limit. The secondary variable upper operating limit may be set as high as 1.25 times the secondary variable upper range limit. The difference between the secondary variable UOL and secondary variable LOL must also be larger than 1% of the secondary variable URL.
40427 - 40428	30427 – 30428	Float	Read/ Write	Secondary Variable Lower Operating Limit These registers hold the secondary variable lower operating limit as a floating-point number in the specified floating-point format. The transmitter must be in the offline mode to change this register. No change will be made if the transmitter mode is not correct.

Primary Register	Alternate Register	Type	Read/ Write	Parameter
				The secondary variable lower operating limit must be greater than or equal to 0 if absolute pressure is selected, or –1* atmospheric reference if gage pressure is selected. The difference between the secondary variable UOL and secondary variable LOL must also be larger than 0.5% of the secondary variable URL.
40429 - 40430	30429 – 30430	Float	Read	Tertiary Value Upper Range Limit These registers hold the tertiary value upper range limit as a floating-point number in the specified floating-point format.
40431 - 40432	30431 – 30432	Float	Read	Tertiary Value Lower Range Limit These registers hold the tertiary value upper range limit as a floating-point number in the specified floating-point format.
40433 - 40434	30433 - 30434	Float	Read/ Write	Tertiary Value Upper Operating Limit These registers hold the tertiary value upper operating limit as a floating-point number in the specified floating-point format. The transmitter must be in the offline mode to change this register. No change will be made if the transmitter mode is not correct. The tertiary variable upper operating limit may be set higher than the tertiary variable upper range limit. The tertiary variable upper operating limit my be set as high as 1.25 times the tertiary variable upper range limit, provided that the difference between the tertiary variable UOL and tertiary variable LOL is no larger than the difference between the tertiary variable URL and tertiary variable LRL. The difference between the tertiary variable UOL and tertiary variable LOL must also be larger than 0.5% of the tertiary variable URL.
40435 - 40436	30435 - 30436	Float	Read/ Write	Tertiary Value Lower Operating Limit These registers hold the tertiary value lower operating limit as a floating-point number in the specified floating-point

Primary Register	Alternate Register	Type	Read/ Write	Parameter
				format. The transmitter must be in the offline mode to change this register. No change will be made if the transmitter mode is not correct. The tertiary variable lower operating limit may be set lower than the tertiary variable lower range limit. The tertiary variable lower operating limit my be set as low as absolute zero (-273.15 °C, -459.67°F, 0 K, or 0 °R), provided that the difference between the tertiary variable UOL and tertiary variable LOL is no larger than the difference between the tertiary variable URL and tertiary variable LRL. The difference between the tertiary variable UOL and tertiary variable LOL must also be larger than 0.5% of the tertiary variable URL.
40437 - 40438	30437 - 30438	Float	Read/ Write	Primary Variable Zero Calibration These registers are used to change the primary variable zero. The value is a floating-point number in the specified floating-point format. This register is write only. The transmitter must be in the calibrate mode to change this register. No change will be made if the transmitter mode is not correct. The primary variable zero must be within 0.5 * primary variable URL of the default reading.
40439 - 40440	30439 - 30440	Float	Write	Primary Variable Span Calibration These registers are used to change the primary variable span. The value is a floating-point number in the specified floating-point format. The transmitter must be in the calibrate mode to change this register. No change will be made if the transmitter mode is not correct. The transmitter must be returned to online mode when the change is complete. The primary variable span entered divided by the transmitter span limit

Primary Register	Alternate Register	Type	Read/ Write	Parameter
				must result in a value of between 0.5 and 2.0.
40441 - 40442	30441 - 30442	Float	Read/ Write	Primary Variable Damping These registers hold the primary variable damping as a floating-point number in the specified floating-point format. Valid values are 0.0 (damping off), 0.5, 1.0, 2.0, 4.0, 8.0, 16.0, and 32.0 seconds. The default value is 0 (damping off). The transmitter must be in the offline or calibrate mode to change this register. No change will be made if the transmitter mode is not correct. The transmitter must be returned to online mode when the change is complete.
40443 - 40444	30443 - 30444	Float	Read/ Write	Secondary Variable Zero Calibration These registers are used to change the secondary variable zero. The value is a floating-point number in the specified floating-point format. The registers are write only. The transmitter must be in the calibrate mode to change this register. No change will be made if the transmitter mode is not correct. The transmitter must be returned to online mode when the change is complete. The secondary variable zero must be within 0.5* secondary variable URL of the default reading.
40445 - 40446	30445 - 30446	Float	Write	Secondary Variable Span Calibration These registers are used to change the secondary variable span. The value is a floating-point number in the specified floating-point format. The transmitter must be in the calibrate mode to change this register. No change will be made if the transmitter mode is not correct. The transmitter must be returned to online mode when the change is complete. The secondary variable span entered

Primary Register	Alternate Register	Type	Read/ Write	Parameter
				divided by the transmitter span limit must result in a value of between 0.5 and 2.0.In order to change the span at least 5% of the rated pressure must be applied, otherwise the calibration will be rejected.
40447 - 40448	30447 - 30448	Float	Read/ Write	Secondary Variable Damping These registers hold the SP damping as a floating-point number in the specified floating-point format. Valid values are 0.0 (damping off), 0.5, 1.0, 2.0, 4.0, 8.0, 16.0, and 32.0 seconds. The default value is 0 (damping off). The transmitter must be in the offline or calibrate mode to change this register. No change will be made if the transmitter mode is not correct. The transmitter must be returned to online mode when the change is complete.
40449 - 40450	30449 - 30450	Float	Read/ Write	Tertiary Variable Zero Calibration These registers are used to change the tertiary variable zero. The value is a floating-point number in the specified floating-point format. The registers are write only. The transmitter must be in the calibrate mode to change this register. No change will be made if the transmitter mode is not correct. The transmitter must be returned to online mode when the change is complete. The tertiary variable offset may be adjusted from the default value by up to 1% of the tertiary URL.
40451	None	Integer	Read/ Write	PID Controller Enable This register is used to determine which variable is used as the process value for PID control. 0 = PID Control is disabled 1 = Primary variable is used as process value 2 = Secondary variable is used as

Primary Register	Alternate Register	Type	Read/ Write	Parameter
				process value 3 = Tertiary variable is used as process value 4 = Registers 40471 - 40472 are used as the process value.
40452 - 40453	None	Float	Read/ Write	Set Point These registers hold the current set point for the PID control as a floating-point number in the specified floating-point format. The setpoint is a floating-point value representing the desired value of the process value.
40454 – 40455	None	Float	Read/ Write	Gain These registers hold the current gain setting for the PID control as a floating-point number in the specified floating-point format. The proportional gain works as follows: A positive value of gain configures a forward-acting PID controller and a negative value of gain configures a reverse acting controller.
40456 – 40457	None	Float	Read/ Write	Reset Time These registers hold the current reset time setting for the PID control as a floating-point number in the specified floating-point format. The reset time, in seconds, controls the reset gain (or magnitude of integral action) in a PI or PID controller. Valid range is any value greater than 0.
40458 – 40459	None	Float	Read/ Write	Rate Time These registers hold the current rate time setting for the PID control as a floating-point number in the specified floating-point format. The rate time, in seconds, controls the rate gain (or magnitude of derivative action) in a PD or PID controller. Valid range is any value greater than 0.
40460 – 40461	None	Float	Read/ Write	Deadband These registers hold the current deadband setting for the PID control as a floating-point number in the specified

Primary Register	Alternate Register	Type	Read/ Write	Parameter
				floating-point format. The setpoint deadband is used by the PID algorithm to determine if the process requires control outputs. If the absolute value of the error is less than the deadband, then the PID function skips execution of the control algorithm. This permits faster execution when the error is within a certain acceptable range or deadband. Valid range is any value greater than 0.
40462 – 40463	None	Float	Read/ Write	Full Scale Limit These registers hold the current full-scale limit setting for the PID control as a floating-point number in the specified floating-point format. The full scale limit setting is used in limiting the maximum output value of the PID control. If the PID algorithm calculates an output quantity that is greater than the value stored in full scale limit, the output quantity is set equal to the value stored in full scale limit. The full scale limit setting should always be greater than the zero scale limit setting. Valid values are between –8192 and 32767.
40464– 40465	None	Float	Read/ Write	Zero Scale Limit These registers hold the current zero scale limit setting for the PID control as a floating-point number in the specified floating-point format. The zero scale limit setting is used in limiting the minimum output value of the PID control. If the PID algorithm calculates an output quantity that is less than the value stored in zero scale limit, the output quantity is set equal to the value stored in zero scale limit. The zero scale limit setting should be less than the full scale limit setting. Valid values are between –8192 and 32767.
40466 – 40467	None	Float	Read/ Write	Cycle Time These registers hold the current cycle time setting for the PID control as a

Primary Register	Alternate Register	Type	Read/ Write	Parameter
				floating-point number in the specified floating-point format. The cycle time is the floating-point value of the PID algorithm execution period measured in seconds. Any value greater than or equal to 0.25 seconds (250 ms) may be specified.
40468	None	Integer	Read/ Write	Manual Output These registers hold the current manual output setting for the PID control as an integer number. The manual mode output is the value that the output is set to when the PID control is in manual mode. Valid values are between –8192 and 32767.
40470	None	Integer	Read/ Write	PID Operating Mode This register holds the current PID operating mode. 0 = Automatic PID control 1 = Manual PID control
40471 - 40472	None	Float	Read/ Write	User Defined Process Value This register holds the process value that is used for PID calculations if register 40451 is set to use the User Defined Value.
40473 - 40500	None	Float		Reserved

Default Transmitter Parameters

A SCADAPack 4000 transmitter is reset to default values when the correct sequence is written to register 40205. The following table shows the registers that are reset and their default values.

Table 0-2: Default Transmitter Parameters

Primary Register	Alternate Register	Type	Value	Parameter
40060	30060	Integer	psi (5)	Primary Variable Units.
40061	30061	Integer	psia (5)	Static Pressure Units. Only used on the 4102MMT.
40062	30062	Integer	degrees C (20)	RTD Units. Only used on the 4102MMT.
40407	30407 30119	Integer	current conditions	Diagnostic Bits
40408	30408	Integer	current conditions	Diagnostic Bits

Primary Register	Alternate Register	Type	Value	Parameter
	30120			
40409	30409 30121	Integer	current conditions	Diagnostic Bits
40410	30410 30122	Integer	0	Diagnostic Bits
40411	30411 30123	Integer	0	Diagnostic Bits
40412	30412 30124	Integer	0	Diagnostic Bits
40417 - 40418	30417 - 30418	Float	factory maximum sensor limit	Primary Variable Upper Operating Limit
40419 - 40420	30419 - 30420	Float	factory default operating limit	Primary Variable Lower Operating Limit
40425 - 40426	30425 – 30426	Float	factory maximum sensor limit	SP Upper Operating Limit. Only used on the 4102MMT.
40427 - 40428	30427 – 30428	Float	factory default operating limit	SP Lower Operating Limit. Only used on the 4102MMT.
40433 - 40434	30433 – 30434	Float	factory maximum sensor limit	RTD Upper Operating Limit. Only used on the 4102MMT.
40435 - 40436	30435 – 30436	Float	factory minimum sensor limit	RTD Lower Operating Limit. Only used on the 4102MMT.
40437 - 40438	30437 – 30438	Float	0.0	Primary Variable Zero Calibration
40439 - 40440	30439 – 30440	Float	factory maximum sensor limit	Primary Variable Span Calibration (factory default)
40441 - 40442	30441 – 30442	Float	0.0	Primary Variable Damping
40443 - 40444	30443 – 30444	Float	0.0	SP Zero Calibration. Only used on the 4102MMT.
40445 - 40446	30445 – 30446	Float	factory maximum sensor limit	SP Span Calibration (factory default). Only used on the 4102MMT.
40447 - 40448	30447 – 30448	Float	0.0	SP Damping. Only used on the 4102MMT
40449 - 40450	30449 – 30450	Float	0.0	RTD Zero Calibration. Only used on the 4102MMT.

Display Module ASCII Characters

The table below lists the useable ASCII characters for the Display Module. The User Defined Display Text registers use these characters.

Table 0-3: Display Module ASCII Characters

Hex Value	Character	Hex Value	Character	Hex Value	Character
0x20	Space	0x48	H	0x62	b
0x25	%	0x49	I	0x63	c
0x2A	*	0x4A	J	0x64	d
0x2B	+	0x4B	K	0x65	e
0x2D	-	0x4C	L	0x66	f
0x2F	/	0x4D	M	0x67	g
0x30	0	0x4E	N	0x68	h
0x31	1	0x4F	O	0x69	i
0x32	2	0x50	P	0x6A	j
0x33	3	0x51	Q	0x6B	k
0x34	4	0x52	R	0x6C	l
0x35	5	0x53	S	0x6D	m
0x36	6	0x54	T	0x6F	n
0x37	7	0x55	U	0x70	o
0x38	8	0x56	V	0x71	p
0x39	9	0x57	W	0x72	q
0x3C	<	0x58	X	0x73	r
0x3D	=	0x59	Y	0x74	s
0x3E	>	0x5A	Z	0x75	t
0x41	A	0x5B	[	0x76	u
0x42	B	0x5C	\	0x77	v
0x43	C	0x5D	]	0x78	w
0x44	D	0x5E	^	0x79	x
0x45	E	0x5F	_	0x7A	y
0x46	F	0x60	‘	0x70	z
0x47	G	0x61	a		

Maintenance

The analog input and output circuitry is calibrated at the factory and does not require periodic calibration. Calibration may be necessary if the module has been repaired as a result of damage.

If the transmitter is not functioning correctly, contact Schneider Electric Technical Support for information on returning the transmitter for repair.

for the location.

⚠ CAUTION
Do not connect or disconnect any field wiring unless the power is off or the area is known to be non-hazardous.

Rotating Process Covers for Venting

As received, the IDP10 Transmitter provides sensor cavity draining without the need for side drain connections, regardless of whether the transmitter is mounted vertically or horizontally. Sensor cavity venting is provided by mounting horizontally or with the optional vent screw (-V). However, if you did not specify this option, you can still achieve venting (instead of draining) with vertical mounting by rotating the process covers. See ***Figure 27***.

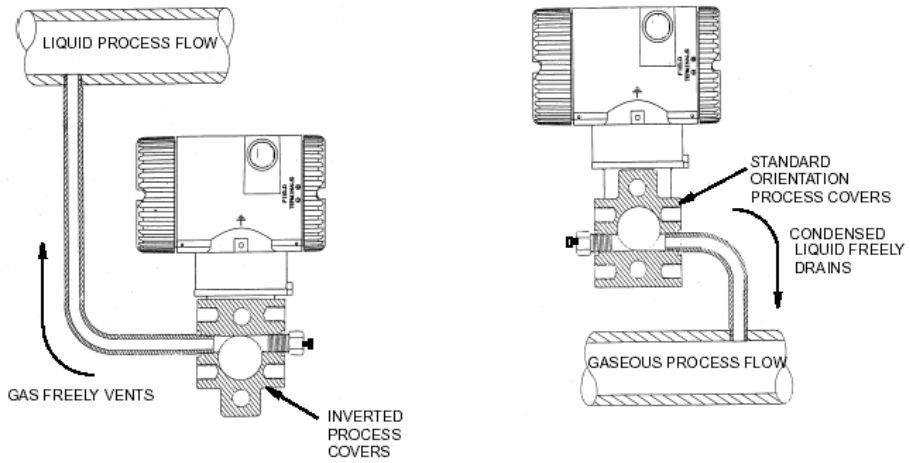

Figure 27: Sensor Cavity Venting and Draining

To rotate the process covers, refer to ***Figure 27: Sensor Cavity Venting and Draining*** and proceed as follows:

Remove the process covers from the sensor by removing two hex head bolts.

Replace the gaskets in the process covers.

Rotate the process covers so that the longer tab is at the bottom.

Reinstall the process covers and bolts. Torque the cover bolts to 100 Nm (75 lbft) in several even increments. Torque values are 66 Nm (50 lbft) when optional 316 ss bolts are specified.

Pressure test the sensor and process cover assembly by applying a hydrostatic pressure of 150% of the maximum static and over range pressure (see page 3) to both sides of the process cover/sensor assembly simultaneously through the process connections. Hold pressure for one minute. There should be no leakage of the test fluid through the gaskets. If leakage occurs, retighten the cover bolts per Step 4 or replace the gaskets and retest.

⚠ CAUTION
Perform hydrostatic text with a liquid and follow proper hydrostatic test procedures.

Sensor Calibration

The Calibration requirements are determined by the local regulatory agency and/or corporate policies. These requirements vary and it is important to understand the calibration requirements for your installation.

BEFORE ATTEMPTING CALIBRATION READ THIS

Field Calibration is **Not Recommended** unless the Calibration Equipment is at least **2X** more accurate than the sensor itself (±0.05% of span and ±0.15°C for temp.).

If you feel Calibration is required and equipment with the necessary accuracy is not available, please return the unit to Schneider Electric or send to a Calibration Lab.

Realflo provides a Calibration Wizard to guide you through the steps to calibrate the sensor. See the Realflo wizards>>Calibrate Input Wizards>>MVT Calibration section of the Realflo User and Reference manual. Realflo provides a record of the calibration in the Event Log as well as a Calibration Report that can be printed for your records.

See the ***Connections For Sensor Calibration*** section for details on how to connect to the sensor for the calibration process.

Troubleshooting

Analog Output

Condition	Action
Outputs are 0mA	Check the power supply. Check the wiring. The transmitter analog output is a sinking type and is not ground referenced.
The full-scale output is less than 20mA.	Check that the load resistance and power supply is within specification.

Communication

Condition	Action
LAN port does not work	Install the LAN jumper when the LAN port is used. Install the jumper before power is applied to the transmitter for the LAN port to work.
LAN communication does not work	Check the wiring is correct for direct connection or connection through a hub, switch or router
LAN communication does not work	Check the subnet and gateway settings are correct.
Serial port does not work	Check COM1 jumper is in the correct position for RS-232 or RS-485.

Specifications

Disclaimer: Schneider Electric reserves the right to change product specifications. For more information, visit http://www.schneider-electric.com.

General

I/O Terminations 2, 3 and 4 pole, removable terminal blocks.
16 to 28 AWG
8A contacts

Environment 5% RH to 95% RH, non-condensing.
–40°C to 70°C
–40°F to 158°F

Serial Communications

Communication Port COM1

3 position removable terminal block.
Jumper selectable RS-232 or RS485

RS-232 TxD and RxD implemented.
RS-232 compatible serial port (CMOS).
Functions when COM1 jumper installed.

RS-485 2-wire half duplex.
5100Ω bias resistors
Functions when COM1 jumper removed.

Baud Rates	1200, 2400, 4800, 9600, 19200, 38400
Parity	none
Word Length	8 bits
Stop Bits	1 bit

Transient Protection COM1

2.5kV surge withstand capability as per ANSI/IEEE C37.90.1-1989

Isolation Common ground return connected to negative side of Vin power input.

Cable Length RS-232 –maximum 10 ft (3 m).
RS-485 –maximum 4000 ft (1200 m).

Protocol	TeleBUS (compatible with Modbus RTU).
Protocol Modes	Slave.

LAN

LAN Compatibility	IEEE 802.3
Termination	10 Base-T (twisted pair), 10M bits/second
	4 position removable terminal block
Network Protocols	IP, ARP, UDP, ICMP
SCADA Protocols	Modbus UDP and Modbus RTU in UDP.
Configuration	Remote over Ethernet
Max Server Connections	20

Visual Indicators

Status Status LED – Functional status
LAN LED – LAN status, Ethernet version only.

Power Supply

DC power Input 9V minimum
30V maximum

Power requirements 60mW at 12V input – RS-232 communication, LAN not enabled, LEDs off.
70mW at 12V input – RS-485 communication, LAN not enabled, LEDs off.
250mW at 30V input – LAN enabled, LEDs on

Analog Input

Power Input Voltage Monitor

10 bits resolution
Accuracy ±1.0V.
9-32.768V measurement range
0-32.768V scaling

Isolation Common ground return connected to negative side of Vin power input.

Analog Output

Output Signal Range 0-20mA

Load Resistance Range

550 to 1400Ω with 30Vdc supply
250 to 1100Ω with 24Vdc supply
0 to 850Ω with 19Vdc supply
0 to 500Ω with 12Vdc supply
0 to 350Ω with 9Vdc supply

The analog output sinks current. Maximum power dissipation is 384mW.
Example: 20mA at 19.2V.

Output Type Single ended regulation on negative side with positive side of load connected to a positive voltage.

Isolation Common ground return connected to negative side of Vin power input.

Resolution 12 bits

Accuracy Specified from 0.5-20mA
±0.15% of full scale at 25°C (77°F)
±0.25% of full scale over temperature range

Noise and Ripple 0.04% maximum, Frequency 0 to 10 kHz.

Transient Protection Transient: 2.5kV surge withstand capability as per ANSI/IEEE C37.90.1-1989

Response Time Less than 10µs for 10% to 90% signal change

Transmitter Functional Specifications

Span and Range Limits for Differential Pressure & Absolute Pressure (4102 and 4032)

Span Code	**Differential Pressure**		**Absolute Pressure**	
	inches of H20	kPa	psia	MPa
A	0.5 to 30 inH2O	(0.12 to 7.5 kPa)	1 to 100 psi	(0.007 to 0.7 MPa)
B	2 to 200 inH2 O	(0.50 to 50 kPa)	3 to 300 psi	(0.021 to 2.1 MPa)
C	10 to 840 inH2O	(2.50 to 210 kPa)	3 to 300 psi	(0.021 to 2.1 MPa)
D	2 to 200 inH2O	(0.50 to 50 kPa)	30 to 1500 psi	(0.21 to 10 MPa)
F	3 to 300 inH2O	(0.75 to 75 kPa)	30 to 1500 psi	(0.21 to 10 MPa)
E	10 to 840 inH2O	(2.50 to 210 kPa)	30 to 1500 psi	(0.21 to 10 MPa)
J	2 to 200 inH2O	(0.50 to 50 kPa)	30 to 3000 psi	(0.21 to 21 MPa)
K	3 to 300 inH2O	(0.75 to 75 kPa)	30 to 3000 psi	(0.21 to 21 MPa)
L	10 to 840 inH2O	(2.5 to 210 kPa)	30 to 3000 psi	(0.21 to 21 MPa)
Low Profile Sensor				
U	0.5 to 30 inH2O	(0.12 to 7.5 kPa)	1 to 100 psi	(0.007 to 0.7 MPa)
V	2 to 200 inH2O	0.50 to 50 kPa)	3 to 300 psi	(0.021 to 2.1 MPa)
W	10 to 840 inH2O	(2.5 to 210 kPa)	3 to 300 psi	(0.021 to 2.1 MPa)
X	2 to 200 inH2O	(0.50 to 50 kPa)	30 to 1500 psi	(0.21 to 10 MPa)
Z	3 to 300 inH2O	(0.75 to 75 kPa)	30 to 1500 psi	(0.21 to 10 MPa)
Y	10 to 840 inH2O	(2.5 to 210 kPa)	30 to 1500 psi	(0.21 to 10 MPa)
M	2 to 200 inH2O	(0.50 to 50 kPa)	30 to 3000 psi	(0.21 to 21 MPa)
P	3 to 300 inH2O	(0.75 to 75 kPa)	30 to 3000 psi	(0.21 to 21 MPa)
R	10 to 840 inH2O	(2.5 to 210 kPa)	30 to 3000 psi	(0.21 to 21 MPa)

Maximum Static Pressure, Working Pressure (MWP), and Overrange Pressure (4102 and 4032)

Span Code	Sensor URL (DP and AP)		Maximum Static		Maximum Working (MWP)		Maximum Overrange	
	DP	AP	Mpa	psi	Mpa	Psi	Mpa	psi
A	30 inH2O (7.5 kPa)	100 psia	0.7	100	0.7	100	1.0	150
B	200 inH2O (50 kPa)	300 psia	2.1	300	2.1	300	3.1	450
C	840 inH2O (210 kPa)	300 psia	2.1	300	2.1	300	3.1	450
D	200 inH2O (50 kPa)	1500 psia	10	1500	10	1500	15	2250
F	300 inH2O (75 kPa)	1500 psia	10	1500	10	1500	15	2250
E	840 inH2O (210 kPa)	1500 psia	10	1500	10	1500	15	2250
J	2 to 200 inH2O	3000 psia	21	3000	21	3000	30	4500
K	3 to 300 inH2O	3000 psia	21	3000	21	3000	30	4500
L	10 to 840 inH2O	3000 psia	21	3000	21	3000	30	4500
U	0.5 to 30 inH2O	100 psia	0.7	100	0.7	100	1.0	150
V	2 to 200 inH2O	300 psia	2.1	300	2.1	300	3.1	450
W	10 to 840 inH2O	300 psia	2.1	300	2.1	300	3.1	450
X	2 to 200 inH2O	1500 psia	10	1500	10	1500	15	2250
Z	3 to 300 inH2O	1500 psia	10	1500	10	1500	15	2250
Y	10 to 840 inH2O	1500 psia	10	1500	10	1500	15	2250
M	2 to 200 inH2O	3000 psia	21	3000	21	3000	30	4500
P	3 to 300 inH2O	3000 psia	21	3000	21	3000	30	4500
R	10 to 840 inH2O	3000 psia	21	3000	21	3000	30	4500

Maximum Differential Pressure (DP) Over Range

The 4102 and 4032 transmitters can withstand a DP pressure over-range on the high side or low side up to 1.5 times the AP upper range limit without damage.

The DP will begin to slowly degrade in accuracy when the DP URL is exceeded up to approximately 2 times the specified accuracy near its cutoff point. The cutoff value is 1.5 times the DP URL for 200, 300 and 400 inch H2O ranges and 1.25 times DP URL for the 840 inches H2O range. The cut off value is approximate because it is based on a raw sensor output prior to compensation. There is a 5% hysteresis intentionally built into the cutoff point so that the FAULT condition won't be constantly bouncing on and off if the DP value dwelled near the cutoff point.

The AP is measured on the high side and is co-located with the DP sensor, so when the DP protection mechanism kicks in, the AP is protected as well, even though it doesn't need the protection. Therefore the AP reading is not valid beyond the DP cutoff point and a fault flag is set.

Span and Range Limits for Absolute and Gauge Pressure (4012)

Span Code	Span Limits		Range Limits (Absolute or Gage Units	
	MPa	Psi	MPa	psi
C	0.007 to 0.21	1 to 30	0 to 0.21	0 to 30
D	0.07 to 2.1	10 to 300	0 to 2.1	0 to 300
E	0.7 to 21	100 to 3000	0 to 21	0 to 3000
F (a)	14 to 42	2000 to 6000	0 to 42	0 to 6000

(a) Span Limit Code F is applicable to gauge pressure transmitter only.

Span and Range Limits for Absolute and Gauge Pressure (4012)

Span Code	Maximum Overrange Pressure Rating (a)		Proof Pressure Rating (a) (b)	
	MPa	Psi	MPa	psi
C	0.31	45	0.827	120
D	3.1	450	8.27	1200
E	31	4500	79.3	11500
F (a)	58	8400	152	22000

(a) Values listed are in absolute or gauge pressure units, as applicable. Maximum overrange pressure is the maximum pressure that may be applied without causing damage to the transmitter.

(b) Proof pressure ratings meet ANSI/ISA Strandard S82.03-1988. Unit may become nonfunctional after application of proof pressure.

(c) Span Limit Code F is applicable to gauge pressure transmitter only.

Measured and Transmitted Outputs

Absolute Pressure (Configurable for Gauge Pressure; PGP = PAP - Patm)

Differential Pressure

RTD Temperature (from External RTD)

RTD Temperature Measurement and Limits

Measurement

DIN/IEC, 2-, 3-, or 4-wire, 100 ohm, Platinum

Resistance-Temperature-Detector (RTD)

Span Limits

10 and 538°C (50 and 1000°F)

Range Limits

-40 and +649°C (-40 and +1200°F)

Adjustable Damping

The transmitter response time is normally 1.0 s, or the electronically adjustable setting of 0.00 (none), 0.50, 1, 2, 4, 8, 16, or 32 seconds, whichever is greater, for a 90% recovery from an 80% input step as defined in ANSI/ISA S51.1.

Suppressed Zero and Elevated Zero

Suppressed or elevated zero ranges acceptable as long as Span and Range Limits are not exceeded.

Minimum Allowable Pressure

With Silicone Fill Fluid

Full vacuum: up to 121 °C (250 °F)

Transmitter Performance Specifications

Zero-Based Calibrations; Stainless Steel Sensor with Silicone Fluid; Under Reference Operating Conditions unless otherwise specified; URL=Upper Range Limit and Span=Calibrated Span

Calibrated Span is equal to URL on all 4000 transmitters, unless a special order has been placed for special calibration over a smaller span.

Accuracy 4102MMT

Accuracy stated includes the effects of Linearity, Hysteresis, and Repeatability.

Differential and Absolute Pressure

For gauge pressure accuracy, add anticipated variation from user-entered barometric pressure.

Digital output accuracy:

±0.05% of Span for spans > or = 10% of URL

Digital Output Accuracy for spans of <10% URL:

±(0.005)X(URL / Span) % of Span

RTD Temperature

±0.28°C (±0.5°F) for the transmitter. This does not include RTD uncertainties, which are additive.

Accuracy 4012MPT

Accuracy stated includes the effects of Linearity, Hysteresis, and Repeatability.

Accuracy for spans > or = 10% URL:

±0.075% of Span

Add ± 0.05% for Span Code A.

Add ± 0.02% for Span Code E.

Accuracy for spans < 10% URL:

± [0.04 + 0.0035 (URL/Span)]%

Accuracy 4032MPT

Accuracy stated includes the effects of Linearity, Hysteresis, and Repeatability.

Accuracy for spans > or = 10% URL:

±0.05% of Span.

(add ±0.05% for Span Code A and add ±0.02% for Span Code E)

Accuracy for spans <10% URL:

Span Code A: ±[(0.002) X (URL / Span) + 0.080] % of Span

Span Code B: ±[(0.0032) X (URL / Span) + 0.018] % of Span

Span Code C: ±[(0.0046) X (URL / Span) + 0.004] % of Span

Span Code D: ±[(0.008) X (URL / Span) + 0.030] % of Span

Span Code E: ±[(0.0036) X (URL / Span) + 0.034] % of Span

Stability

Long-Term Drift less than ±0.05% of URL per year over a 5-year period.

Power-up Time

For the 4102 Transmitter:

3.2 seconds typical for transmitter to return the first valid measurements.

7 seconds maximum, if transmitter was in calibration or offline mode when power was cycled, to return the first valid measurements.

For the 4012 and 4032 Transmitters:

12 seconds maximum for transmitter to return the first valid measurement.

Vibration Effect

±0.2% of URL per “g” for vibrations in the range of 5 to 500 Hz; with double amplitudes of 6.3 mm (0.25 in) in the range of 5 to 15 Hz, or accelerations of 3 “g” in the range of 15 to 500 Hz, whichever is smaller, for transmitter with aluminum housing; and with double amplitudes of 6.3 mm (0.25 in) in the range of 5 to 9 Hz, or accelerations of 1 “g” in the range of 9 to 500 Hz, whichever is smaller, for transmitter with 316 ss housing.

Supply Voltage Effect

Output changes less than 0.005% of span for each 1 V change within the specified supply voltage requirements.

Static Pressure Effect on Differential Pressure (4102MMT)

The zero and span shift for a 0.7 MPa, (100 psi), change in static pressure is:

ZERO SHIFT

Span Code	Zero shift for a 0.7 Mpa (100 psi) change:
A and U	±0.050
B and V	±0.007
C and W	±0.002
D and X	±0.010
F and Z	±0.007
E and Y	±0.004
J and M	±0.010
K and P	±0.007
L and R	±0.004

SPAN SHIFT

±0.01% of Reading

Position Effect

Transmitter may be mounted in any position. Any zero effect caused by mounting position can be removed by re-zeroing. There is no span effect.

Ambient Temperature Effect (4102MMT)

Total effect for a 28°C (55°F) change within Normal Operating Condition limits for both absolute and differential pressure measurements is:

DIGITAL OUTPUT: ±(0.03% URL + 0.06% Span).

Ambient Temperature Effect (4012MPT)

Total effect for a 28°C (55°F) change within Normal Operating Condition limits for both absolute and differential pressure measurements is:

Span Code C: ±(0.08 % URL + 0.1 % Span).

Span Code D: ±(0.08 % URL + 0.1 % Span).

Span Code E: ±(0.08 % URL + 0.1 % Span).

Span Code F: ±(0.08 % URL + 0.1 % Span).

Ambient Temperature Effect (4032MPT)

Total effect for a 28°C (55°F) change within Normal Operating Condition limits for both absolute and differential pressure measurements is:

Span Code A: ±(0.18 % URL + 0.025 % Span).

Span Code B: ±(0.03 % URL + 0.060 % Span).

Span Code C: ±(0.03 % URL + 0.060 % Span).

Span Code D: ±(0.03 % URL + 0.060 % Span).

Span Code E: ±(0.03 % URL + 0.060 % Span).

Span Code F: ±(0.03 % URL + 0.060 % Span).

Switching and Indirect Lightning Transients

The transmitter can withstand a transient surge up 2000 V common mode or 1000 V normal mode without permanent damage. Output shift is <1.0%.

Transmitter Physical Specifications

Process Cover and Connector Material (Process Wetted)

316 ss or Hastelloy C, as specified.

Process Cover and Process Connection Gaskets

Glass filled ptfe (Chemloy)

Process Cover Bolts and Nuts

ASTM A193, Grade B7 high strength alloy steel for bolts, and ASTM A194 Grade 2H high strength alloy steel for nuts are standard. Options include NACE Class B7M bolting, 17-4 ss bolting, and 316 ss bolting.

Sensor Material (Process Wetted)

316 L ss or Hastelloy C, as specified

Sensor Fill Fluids

Silicone Oil

Environmental Protection

Transmitter is dust tight and weather proof per IEC IP66 and provides the environmental and corrosion resistant protection of NEMA Type 4X.

Electronics Housing and Housing Covers

Housing has two compartments to separate the electronics from the field connections. The housing and covers are made from low copper, die-cast aluminum alloy with an epoxy finish, or from 316 ss. Buna-N O-ring seals are used to seal the threaded housing covers, housing neck, and terminal block.

Electrical Connections

Field wiring enters through 1/2” NPT threaded entrances on either side of the electronics housing. Wires terminate in removable terminal blocks for ease of installation and calibration.

Mounting Position

The transmitter may be mounted in any orientation.

Approximate Mass

3.5 kg (7.8 lb) – without Process Connectors

4.2 kg (9.2 lb) – with Process Connectors

Add 1.1 kg (2.4 lb) – with 316 ss Housing

Add 0.2 kg (0.4 lb) – with LCD Indicator Option

Approvals and Certifications

Safety	c(CSA)us Explosion proof. Class I, Div. 1 Groups B, C and D Hazardous Locations. c(CSA)us Class I, Div. 2 Groups A, B, C and D Hazardous Locations. Temperature code T5 at maximum ambient, 70°C. Provides non-incendive field circuits for RTD.
	CSA certified to the following standards: CSA Std. C22.2 No. 213-M1987 - Class I, Division 2 Hazardous Locations CSA Std. C22.2 No. 142-M1987 - Process Control Equipment UL Std. No. 1604 - Class I and II, Division 2; Class III Hazardous (Classified) Locations UL Std No. 916 - Energy Management Equipment
	ATEX (applies to 4032, 4102 and 4203): LCIE 07 ATEX 6058 Ex d IIC T6; -50°C ≤ Ta ≤ 70°C per IEC 60079-1, protection type d (Flameproof ATEX (applies to 4012): LCIE 07 ATEX 6058 Ex d IIC T6; -20°C ≤ Ta ≤ 70°C per IEC 60079-1, protection type d (Flameproof)) IECEx (applies to 4032, 4102 and 4203): CSA 05.0011 IECEx Ex d IIC T6; -50°C ≤ Ta ≤ 70°C per IEC 60079-1, protection type d (Flameproof)
Digital Emissions	FCC Part 15, Subpart B, Class A Verification EN 61000-6-4: 2007 Electromagnetic Compatibility Generic Emission Standard for Industrial Environments
Immunity	EN 61000-6-2; 2005 Electromagnetic Compatibility Generic Standards Immunity For Industrial Environments
Declaration	This product conforms to the above Emissions and Immunity Standards and therefore conforms with the requirements of Council Directive 2004/108/EEC (as amended) relating to electromagnetic compatibility and is eligible to bear the CE mark.

ATEX/IECEx label

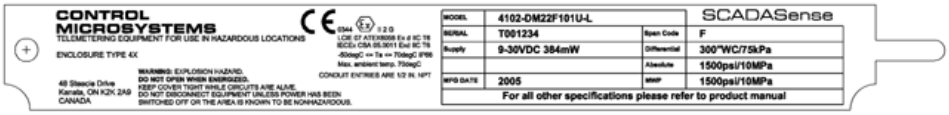

Dimensions

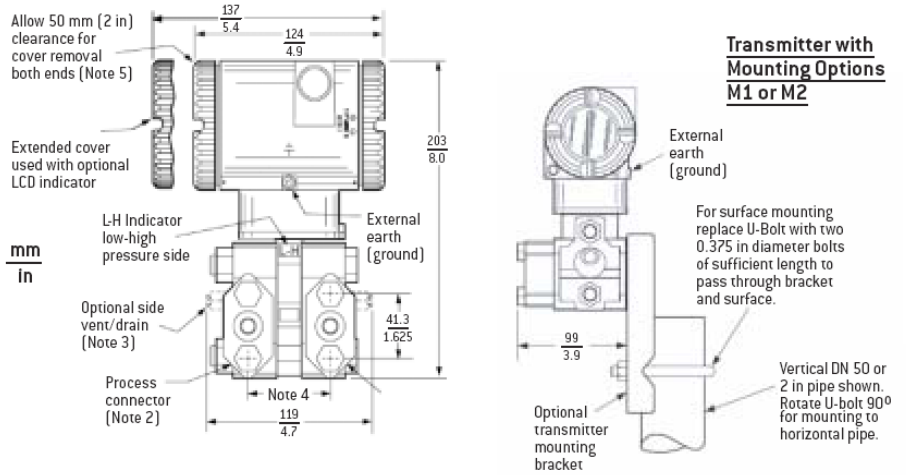

NOTES:

1. Conduit connection 1/2 NPT or PG 13.5, both sides: plug unused connection with metal plug (supplied).
2. Process connectors may be removed and connections made directly to process cover using 1/4 NPT internal thread in process cover.
3. Process cover can be inverted making optional side vents or side drains.
4. Process connectors can be inverted to give 51, 54, or 57 mm (2.0, 2.125, or 2.25 in) center-to-center distance between high and low pressure connections.
5. Topworks can be rotated to any position within one turn counterclockwise of the fully tightened position.
6. Process cover end plugs are substituted for vent screws when optional side vents are specified.

Dimensions

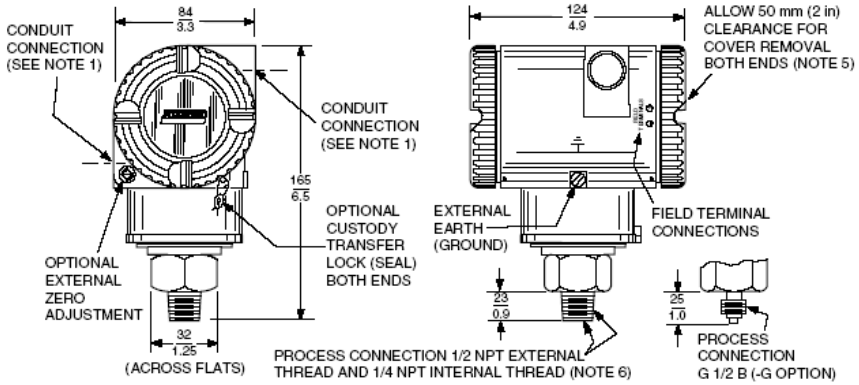

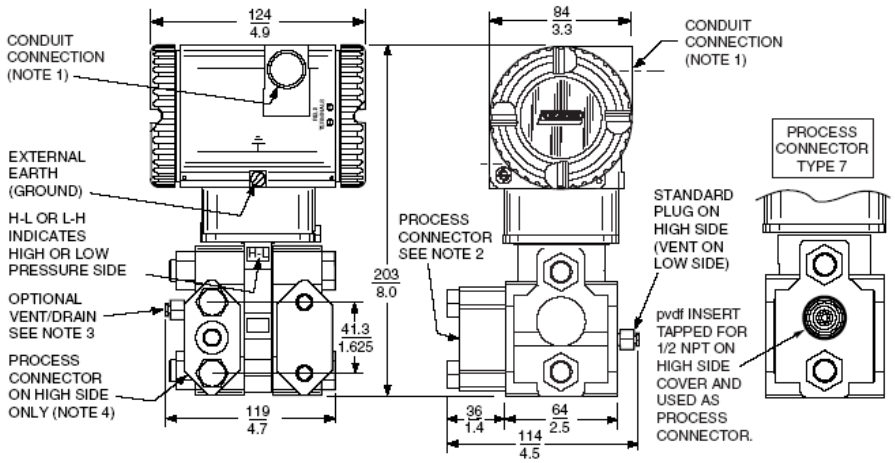

NOTES:

Conduit connection 1/2 NPT or PG 13.5, both sides: plug unused connection with metal plug (supplied)

Process connectors may be removed and connections made directly to process cover using 1/4 NPT internal thread in process cover. Note that with process connection code “0” , there is no connector.

Process cover can be inverted making optional side vents or side drains.

For users who desire the process connection on the right side, merely rotate transmitter 180 degrees and relocate process connector shown to the right side.

Topworks can be rotated to any position within one turn counterclockwise of the fully tightened position

Do not use the ¼ NPT internal thread to direct-connect the transmitter.