MiCOM P849

Input & Output Extension Device

P849/EN M/D33

Software Version B0
Hardware Suffix M

Technical Manual

Schneider Electric

Note The technical manual for this device gives instructions for its installation, commissioning, and operation. However, the manual cannot cover all conceivable circumstances or include detailed information on all topics. In the event of questions or specific problems, do not take any action without proper authorization. Contact the appropriate Schneider Electric technical sales office and request the necessary information.

Any agreements, commitments, and legal relationships and any obligations on the part of Schneider Electric including settlements of warranties, result solely from the applicable purchase contract, which is not affected by the contents of the technical manual.

This device MUST NOT be modified. If any modification is made without the express permission of Schneider Electric, it will invalidate the warranty, and may render the product unsafe.

CONTENTS

Date:	08/2015
Products covered by this chapter:	This chapter covers the specific versions of the MiCOM products listed below. This includes ***only*** the following combinations of Software Version and Hardware Suffix.
Hardware Suffix:	M
Software Version:	B0
Connection Diagrams:	10P849xx (xx = 01 to 06)

SAFETY INFORMATION

CHAPTER SI

Date:	01/2014
Products covered by this chapter:	This chapter covers the specific versions of the MiCOM products listed below. This includes ***only*** the following combinations of Software Version and Hardware Suffix.
Software Version:	All MiCOM Px4x products
Hardware Suffix:	All MiCOM Px4x products

CONTENTS

Notes:

1 INTRODUCTION

This guide and the relevant equipment documentation provide full information on safe handling, commissioning and testing of this equipment. This Safety Information section also includes reference to typical equipment label markings.

Documentation for equipment ordered from Schneider Electric is dispatched separately from manufactured goods and may not be received at the same time as the equipment. Therefore this guide is provided to ensure that printed information which may be present on the equipment is fully understood by the recipient.

The technical data in this Safety Information section provides typical information and advice, which covers a variety of different products. You must also refer to the Technical Data section of the relevant product publication(s) as this includes additional information which is specific to particular equipment.

WARNING **Before carrying out any work on the equipment all people should be familiar with the contents of this Safety Information section and the ratings on the equipment's rating label.**

You also need to make reference to the external connection diagram(s) before the equipment is installed, commissioned or serviced.

Language-specific, self-adhesive User Interface labels are provided in a bag for some equipment.

2 HEALTH AND SAFETY

The information in the Safety Information section of the equipment documentation is intended to ensure that equipment is properly installed and handled in order to maintain it in a safe condition.

People

Schneider Electric assume that everyone who will be associated with installing, commissioning or working on the equipment will be completely familiar with the contents of this Safety Information section, or the Safety Guide. We also assume that everyone working with the equipment will have sufficient knowledge and experience of electrical systems. We also assume that they will work with a complete understanding of the equipment they are working on and the health and safety issues of the location in which they are working.

Planning

We recommend that a detailed plan is developed before equipment is installed into a location, to make sure that the work can be done safely. Such a plan needs to determine how relevant equipment can be isolated from the electrical supply in such as way that there is no possibility of accidental contact with any electrical live equipment, wiring or busbars. It also needs to take into account the requirements for people to work with tools/equipment a safe distance away from any hazards.

Live and Stored Voltages

When electrical equipment is in operation, dangerous voltages will be present in certain parts of the equipment. Even if electrical power is no longer being supplied, some items of equipment may retain enough electrical energy inside them to pose a potentially serious risk of electrocution or damage to other equipment.

Important	**Remember that placing equipment in a “test” position does not normally isolate it from the power supply or discharge any stored electrical energy.**

Warnings and Barricades

Everyone must observe all warning notices. This is because the incorrect use of equipment, or improper use may endanger personnel and equipment and also cause personal injury or physical damage.

Unauthorized entry should also be prevented with suitably marked barricades which will notify people of any dangers and screen off work areas.

People should not enter electrical equipment cubicles or cable troughs until it has been confirmed that all equipment/cables have been isolated and de-energised.

Electrical Isolation

Before working in the terminal strip area, all equipment which has the potential to provide damaging or unsafe levels of electrical energy must be isolated. You will need to isolate and de-energize the specific item of equipment which is being worked on.

Depending on the location, you may also need to isolate and de-energize other items which are electrically connected to it as well as those which are close enough to pose a risk of electrocution in the event of accidental physical or electrical contact.

Remember too that, where necessary, both load and line sides should be de-energized.

Before you make contact with any equipment use an approved voltage detection device to reduce the risk of electric shock.

Risk of Accidental Contact or Arc Flash

Be aware of the risk of accidental contact with hands, long hair, tools or other equipment; and be aware of the possibility of the increased risk of arc flash from areas of high voltage.

Always wear appropriate shock and arc flash personal protective equipment while isolating and de-energizing electrical equipment and until a de-energized state is confirmed.

Temporary Protection

Consider to the use of temporary protective Grounding-Short Circuiting (G-SC). This is required to establish and maintain de-energization when electrical equipment operates at greater than 1000 volts or there is potential for back-feed at any voltage.

Temporary protective G-SC can be accomplished by installing cables designed for that purpose or by the use of intrinsic G-SC equipment. Temporary protective G-SC equipment must be able to carry maximum fault current available and have an impedance low enough to cause the applicable protective device to operate.

Restoring Power

To reduce the risks, the work plan should have a check list of things which must be completed and checks made before electrical power can be restored.

Be aware of the risk that electrical systems may have power restored to them at a remote location (possibly by the customer or a utility company). You should consider the use of lockouts so that the electrical system can be restored only when you unlock it. In any event, you should be aware of and be part of the process which determines when electrical power can be restored; and that people working on the system have control over when power is restored.

Inspect and test the electrical equipment to ensure it has been restored to a “safe” condition prior re-energizing.

Qualified Personnel

Proper and safe operation of the equipment depends on appropriate shipping and handling, proper storage, installation and commissioning, and on careful operation, maintenance and servicing. For this reason only qualified personnel may work on or operate the equipment.

Qualified personnel are individuals who:

- Are familiar with the installation, commissioning, and operation of the equipment and of the system to which it is being connected;
- Are able to safely perform switching operations in accordance with accepted safety engineering practices and are authorized to energize and de-energize equipment and to isolate, ground, and label it;
- Are trained in the care and use of safety apparatus in accordance with safety engineering practices;
- Are trained in emergency procedures (first aid).

Documentation

The equipment documentation gives instructions for its installation, commissioning, and operation. However, the manuals cannot cover all conceivable circumstances or include detailed information on all topics. In the event of questions or specific problems, do not take any action without proper authorization. Contact the appropriate Schneider Electric technical sales office and request the necessary information.

3 SYMBOLS AND LABELS ON THE EQUIPMENT

For safety reasons the following symbols and external labels, which may be used on the equipment or referred to in the equipment documentation, should be understood before the equipment is installed or commissioned.

3.1 Symbols

Caution: refer to equipment documentation

Caution: risk of electric shock

Protective Conductor (*Earth) terminal

Functional/Protective Conductor (*Earth) terminal

Note:	*This symbol may also be used for a Protective Conductor (Earth) Terminal if that terminal is part of a terminal block or sub-assembly e.g. power supply.*

***CAUTION:**	**The term "Earth" used throughout this technical manual is the direct equivalent of the North American term "Ground".**

3.2 Labels

See Safety Guide (SFTY/4L M) for typical equipment labeling information.

4 INSTALLING, COMMISSIONING AND SERVICING

Manual Handling

Plan carefully, identify any possible hazards and determine whether the load needs to be moved at all. Look at other ways of moving the load to avoid manual handling. Use the correct lifting techniques and Personal Protective Equipment to reduce the risk of injury.

Many injuries are caused by:

- Lifting heavy objects
- Lifting things incorrectly
- Pushing or pulling heavy objects
- Using the same muscles repetitively.

Follow the Health and Safety at Work, etc Act 1974, and the Management of Health and Safety at Work Regulations 1999.

Equipment Connections

Personnel undertaking installation, commissioning or servicing work for this equipment should be aware of the correct working procedures to ensure safety.

The equipment documentation should be consulted before installing, commissioning, or servicing the equipment.

Terminals exposed during installation, commissioning and maintenance may present a hazardous voltage unless the equipment is electrically isolated.

The clamping screws of all terminal block connectors, for field wiring, using M4 screws shall be tightened to a nominal torque of 1.3 Nm.

Equipment intended for rack or panel mounting is for use on a flat surface of a Type 1 enclosure, as defined by Underwriters Laboratories (UL).

Any disassembly of the equipment may expose parts at hazardous voltage, also electronic parts may be damaged if suitable ElectroStatic voltage Discharge (ESD) precautions are not taken.

If there is unlocked access to the rear of the equipment, care should be taken by all personnel to avoid electric shock or energy hazards.

Caution	*Voltage and current connections shall be made using insulated crimp terminations to ensure that terminal block insulation requirements are maintained for safety.*

Watchdog (self-monitoring) contacts are provided in numerical relays to indicate the health of the device. Schneider Electric strongly recommends that these contacts are hardwired into the substation's automation system, for alarm purposes.

To ensure that wires are correctly terminated the correct crimp terminal and tool for the wire size should be used.

The equipment must be connected in accordance with the appropriate connection diagram.

Protection Class I Equipment

- Before energizing the equipment it must be earthed using the protective conductor terminal, if provided, or the appropriate termination of the supply plug in the case of plug connected equipment.
- The protective conductor (earth) connection must not be removed since the protection against electric shock provided by the equipment would be lost.
- When the protective (earth) conductor terminal (PCT) is also used to terminate cable screens, etc., it is essential that the integrity of the protective (earth) conductor is checked after the addition or removal of such functional earth connections. For M4 stud PCTs the integrity of the protective (earth) connections should be ensured by use of a locknut or similar.

The recommended minimum protective conductor (earth) wire size is 2.5 mm² (3.3 mm² for North America) unless otherwise stated in the technical data section of the equipment documentation, or otherwise required by local or country wiring regulations.

The protective conductor (earth) connection must be low-inductance and as short as possible.

All connections to the equipment must have a defined potential. Connections that are pre-wired, but not used, should preferably be grounded when binary inputs and output relays are isolated. When binary inputs and output relays are connected to common potential, the pre-wired but unused connections should be connected to the common potential of the grouped connections.

Pre-Energization Checklist

Before energizing the equipment, the following should be checked:

- Voltage rating/polarity (rating label/equipment documentation);
- CT circuit rating (rating label) and integrity of connections;
- Protective fuse rating;
- Integrity of the protective conductor (earth) connection (where applicable);
- Voltage and current rating of external wiring, applicable to the application.

Accidental Touching of Exposed Terminals

If working in an area of restricted space, such as a cubicle, where there is a risk of electric shock due to accidental touching of terminals which do not comply with IP20 rating, then a suitable protective barrier should be provided.

Equipment Use

If the equipment is used in a manner not specified by the manufacturer, the protection provided by the equipment may be impaired.

Removal of the Equipment Front Panel/Cover

Removal of the equipment front panel/cover may expose hazardous live parts, which must not be touched until the electrical power is removed.

UL and CSA/CUL Listed or Recognized Equipment

To maintain UL and CSA/CUL Listing/Recognized status for North America the equipment should be installed using UL or CSA Listed or Recognized parts for the following items: connection cables, protective fuses/fuseholders or circuit breakers, insulation crimp terminals and replacement internal battery, as specified in the equipment documentation.

For external protective fuses a UL or CSA Listed fuse shall be used. The Listed type shall be a Class J time delay fuse, with a maximum current rating of 15 A and a minimum d.c. rating of 250 Vd.c., for example type AJT15.

Where UL or CSA Listing of the equipment is not required, a high rupture capacity (HRC) fuse type with a maximum current rating of 16 Amps and a minimum d.c. rating of 250 Vd.c. may be used, for example Red Spot type NIT or TIA.

Equipment Operating Conditions

The equipment should be operated within the specified electrical and environmental limits.

Current Transformer Circuits

Do not open the secondary circuit of a live CT since the high voltage produced may be lethal to personnel and could damage insulation. Generally, for safety, the secondary of the line CT must be shorted before opening any connections to it.

For most equipment with ring-terminal connections, the threaded terminal block for current transformer termination has automatic CT shorting on removal of the module. Therefore external shorting of the CTs may not be required, the equipment documentation should be checked to see if this applies.

For equipment with pin-terminal connections, the threaded terminal block for current transformer termination does NOT have automatic CT shorting on removal of the module.

External Resistors, including Voltage Dependent Resistors (VDRs)

Where external resistors, including Voltage Dependent Resistors (VDRs), are fitted to the equipment, these may present a risk of electric shock or burns, if touched.

Battery Replacement

Where internal batteries are fitted they should be replaced with the recommended type and be installed with the correct polarity to avoid possible damage to the equipment, buildings and persons.

Insulation and Dielectric Strength Testing

Insulation testing may leave capacitors charged up to a hazardous voltage. At the end of each part of the test, the voltage should be gradually reduced to zero, to discharge capacitors, before the test leads are disconnected.

Insertion of Modules and PCB Cards

Modules and PCB cards must not be inserted into or withdrawn from the equipment whilst it is energized, since this may result in damage.

Insertion and Withdrawal of Extender Cards

Extender cards are available for some equipment. If an extender card is used, this should not be inserted or withdrawn from the equipment whilst it is energized. This is to avoid possible shock or damage hazards. Hazardous live voltages may be accessible on the extender card.

External Test Blocks and Test Plugs

Great care should be taken when using external test blocks and test plugs such as the MMLG, MMLB and MiCOM P990 types, hazardous voltages may be accessible when using these. *CT shorting links must be in place before the insertion or removal of MMLB test plugs, to avoid potentially lethal voltages.

**Note:*	*When a MiCOM P992 Test Plug is inserted into the MiCOM P991 Test Block, the secondaries of the line CTs are automatically shorted, making them safe.*

Fiber Optic Communication

Where fiber optic communication devices are fitted, these should not be viewed directly. Optical power meters should be used to determine the operation or signal level of the device.

Cleaning

The equipment may be cleaned using a lint free cloth dampened with clean water, when no connections are energized. Contact fingers of test plugs are normally protected by petroleum jelly, which should not be removed.

5 DE-COMMISSIONING AND DISPOSAL

De-Commissioning

The supply input (auxiliary) for the equipment may include capacitors across the supply or to earth. To avoid electric shock or energy hazards, after completely isolating the supplies to the equipment (both poles of any dc supply), the capacitors should be safely discharged via the external terminals prior to de-commissioning.

Disposal

It is recommended that incineration and disposal to water courses is avoided. The equipment should be disposed of in a safe manner. Any equipment containing batteries should have them removed before disposal, taking precautions to avoid short circuits. Particular regulations within the country of operation, may apply to the disposal of the equipment.

6 TECHNICAL SPECIFICATIONS FOR SAFETY

Unless otherwise stated in the equipment technical manual, the following data is applicable.

6.1 Protective Fuse Rating

The recommended maximum rating of the external protective fuse for equipments is 16A, High Rupture Capacity (HRC) Red Spot type NIT, or TIA, or equivalent. Unless otherwise stated in equipment technical manual, the following data is applicable. The protective fuse should be located as close to the unit as possible.

DANGER **CTs must NOT be fused since open circuiting them may produce lethal hazardous voltages.**

6.2 Protective Class

IEC 60255-27: 2005	Class I (unless otherwise specified in the equipment documentation).
EN 60255-27: 2005	This equipment requires a protective conductor (earth) connection to ensure user safety.

6.3 Installation Category

IEC 60255-27: 2005	Installation Category III (Overvoltage Category III)
EN 60255-27: 2005	Distribution level, fixed installation. Equipment in this category is qualification tested at 5 kV peak, 1.2/50 µs, 500 Ω, 0.5 J, between all supply circuits and earth and also between independent circuits.

6.4 Environment

The equipment is intended for indoor installation and use only. If it is required for use in an outdoor environment then it must be mounted in a specific cabinet of housing which will enable it to meet the requirements of IEC 60529 with the classification of degree of protection IP54 (dust and splashing water protected).

Pollution Degree	Pollution Degree 2 Compliance is demonstrated by reference to safety standards.
Altitude	Operation up to 2000m

Notes:

INTRODUCTION

CHAPTER 1

Date:	08/2015
Products covered by this chapter:	This chapter covers the specific versions of the MiCOM products listed below. This includes ***only*** the following combinations of Software Version and Hardware Suffix.
Hardware Suffix:	M
Software Version:	B0
Connection Diagrams:	10P849xx (xx = 01 to 06)

CONTENTS

Notes:

1 DOCUMENTATION STRUCTURE

This manual provides a functional and technical description of this MiCOM device, and gives a comprehensive set of instructions for it's use and application. A summary of the different chapters of this manual is given here:

	Description	Chapter Code
	Safety Information A guide to the safe handling, commissioning and testing of equipment. This provides typical information and advice which covers a range of MiCOM Px4x products. It explains how to work with equipment safely.	**Px4x/EN SI**
1	**Introduction** A guide to the MiCOM range of relays and the documentation structure. General safety aspects of handling Electronic Equipment are discussed with particular reference to relay safety symbols. Also a general functional overview of the relay and brief application summary is given.	**P849/EN IT**
2	**Technical Data** Technical data including setting ranges, accuracy limits, recommended operating conditions, ratings and performance data. Compliance with norms and international standards is quoted where appropriate.	**P849/EN TD**
3	**Getting Started** A guide to the different user interfaces of the IED describing how to start using it. This chapter provides detailed information regarding the communication interfaces of the IED, including a detailed description of how to access the settings database stored within the IED.	**P849/EN GS**
4	**Settings** List of all relay settings, including ranges, step sizes and defaults, together with a brief explanation of each setting.	**P849/EN ST**
5	**Operation** A comprehensive and detailed functional description of all protection and non-protection functions.	**P849/EN OP**
6	**Application Notes** This section includes a description of common power system applications of the relay, calculation of suitable settings, some typical worked examples, and how to apply the settings to the relay.	**P849/EN AP**
7	**Using the PSL Editor** This provides a short introduction to using the PSL Editor application.	**Px4x/EN SE**
8	**Programmable Logic** Overview of the Programmable Scheme Logic (PSL) and a description of each logical node. This chapter includes the factory default and an explanation of typical applications.	**P849/EN PL**
9	**Measurements and Recording** Detailed description of the relays recording and measurements functions including the configuration of the event and disturbance recorder and measurement functions.	**P849/EN MR**
10	**Product Design** Overview of the operation of the relay's hardware and software. This chapter includes information on the self-checking features and diagnostics of the relay.	**P849/EN PD**
11	**Commissioning** Instructions on how to commission the relay, comprising checks on the calibration and functionality of the relay.	**P849/EN CM**
12	**Test and Setting Records** This is a list of the tests made and the settings stored on the MiCOM IED.	**P849/EN RC**

	Description	Chapter Code
13	**Maintenance** A general maintenance policy for the relay is outlined.	**Px4x/EN MT**
14	**Troubleshooting** Advice on how to recognize failure modes and the recommended course of action. Includes guidance on whom within Schneider Electric to contact for advice.	**Px4x/EN TS**
15	**SCADA Communications** This chapter provides an overview regarding the SCADA communication interfaces of the relay. Detailed protocol mappings, semantics, profiles and interoperability tables are not provided within this manual. Separate documents are available per protocol, available for download from our website.	**P849/EN SC**
16	**Installation** Recommendations on unpacking, handling, inspection and storage of the relay. A guide to the mechanical and electrical installation of the relay is provided, incorporating earthing recommendations.	**Px4x/EN IN**
17	**Connection Diagrams** A list of connection diagrams, which show the relevant wiring details for this relay.	**P849/EN CD**
18	**Cyber Security** An overview of cyber security protection (to secure communication and equipment within a substation environment). Relevant cyber security standards and implementation are described too.	**Px4x/EN CS**
19	**Dual Redundant Ethernet Board (DREB)** Information about how MiCOM products can be equipped with Dual Redundant Ethernet Boards (DREBs) and the different protocols which are available. Also covers how to configure and commission these types of boards.	**Px4x/EN REB**
20	**Parallel Redundancy Protocol (PRP) Notes** Includes an introduction to Parallel Redundancy Protocols (PRP) and the different networks PRP can be used with. Also includes details of PRP and MiCOM functions.	**Px4x/EN PR**
21	**High-availability Seamless Redundancy (HSR)** Introduction to the High-availability Seamless Redundancy (HSR); and how it is implemented on MiCOM-based products manufactured by Schneider Electric.	**Px4x/EN HS**
22	**Menu Maps** This is a series of charts of the various menus which are contained in this IED. This shows you how to move from one menu option to another, if you are using the IED at the front panel.	**P849/EN MM**
23	**Version History (of Firmware and Service Manual)** This is a history of all hardware and software releases for this product.	**P849/EN VH**
	Symbols and Glossary List of common technical terms, abbreviations and symbols found in this documentation.	**Px4x/EN SG**

Some of these chapters are *Specific* to a particular MiCOM product. Others are *Generic* – meaning that they cover more than one MiCOM product. The generic chapters have a Chapter Code which starts with Px4x.

2 INTRODUCTION

About MiCOM Range

MiCOM is a comprehensive solution capable of meeting all electricity supply requirements. It comprises a range of components, systems and services from Schneider Electric.

Central to the MiCOM concept is flexibility. MiCOM provides the ability to define an application solution and, through extensive communication capabilities, integrate it with your power supply control system.

The components within MiCOM are:

- P range protection relays;
- C range control products;
- M range measurement products for accurate metering and monitoring;
- S range versatile PC support and substation control packages.

MiCOM products include extensive facilities for recording information on the state and behaviour of the power system using disturbance and fault records. They can also provide measurements of the system at regular intervals to a control centre enabling remote monitoring and control to take place.

For up-to-date information, please see:

www.schneider-electric.com

Note	*During 2011, the International Electrotechnical Commission classified the voltages into different levels (IEC 60038). The IEC defined LV, MV, HV and EHV as follows: LV is up to 1000V. MV is from 1000V up to 35 kV. HV is from 110 kV or 230 kV. EHV is above 230 KV.* *There is still ambiguity about where each band starts and ends. A voltage level defined as LV in one country or sector, may be described as MV in a different country or sector. Accordingly, LV, MV, HV and EHV suggests a possible range, rather than a fixed band. Please refer to your local Schneider Electric office for more guidance.*

3 PRODUCT SCOPE

The MiCOM P849 Input and Output extension device has been designed to increase the number of possible applications. The device includes a comprehensive range of features to aid with system diagnosis and fault analysis.

3.1 Functional Overview

The device contains a wide variety of communication functions and extension facilities which are summarized below:

P849 Overview		
Input / Output (I/O) arrangements available:	**Digital inputs**	**Relay outputs**
Option A	32	16
Option B	48	24
Option C	32	30 (16 high speed & high break relays)
Option D	16	60
Option E	64	16
Option F	32	46

Features	
Function keys	10
Programmable tri-colour LEDs	18
Language:	English, French, German, Spanish, Russian or Chinese

3.1.1 Auxiliary Voltage Rating Options

Three ordering options:
(i) Vx: 24 to 32 Vdc
(ii) Vx: 48 to 110 Vdc,
(iii) Vx: 110 to 250 Vdc, and 100 to 240 Vac (rms).

3.1.2 Communication Protocol Options

Communication protocols	P849
K-Bus / Courier	Yes
MODBUS	Yes
VDEW (IEC 60870-5-103) (RS485 or Fibre Optic)	Yes
DNP3.0	Yes
IEC 61850 + Courier via rear RS485 port	Yes
IEC 61850 + IEC60870-5-103 via rear RS485 port	Yes
DNP3.0 over Ethernet and Courier via rear K-Bus/RS485	No for Software Version B0

The relay supports these relay management functions as well as the ones shown above.

- Measurement of all instantaneous & integrated values
- Circuit breaker, status & condition monitoring
- Programmable Scheme Logic (PSL)
- Trip circuit and coil supervision (using PSL)
- Alternative setting groups (model dependent)
- Programmable function keys (model dependent)
- Control inputs
- Programmable allocation of digital inputs and outputs
- Sequence of event recording
- Comprehensive disturbance recording (waveform capture)
- Fault recording
- Fully customizable menu texts
- Multi-level password protection
- Power-up diagnostics and continuous self-monitoring of relay
- Commissioning test facilities
- Real time clock/time synchronization - time synchronization possible from IRIG-B input, opto input or communications
- Password protection
- Read only mode

3.2 Ordering Options for P849

Note	*The following Cortec tables list the options available as of the date shown of this documentation. The most up-to-date Cortec versions of these tables can be found on our web site (www.schneider-electric.com). It may not be possible to select ALL of the options shown in this chart within a single item of equipment.*

3.2.1 Information Required with Order

Order form	MiCOM P849										
External I/O Box	P849		0								
Vx Aux Rating:											
24 - 32 Vdc		**9**									
48 - 110 Vdc		**2**									
110 - 250 Vdc (100 - 240 Vac)		**3**									
In/Vn Rating:											
None			**0**								
Hardware Options:											
Standard : no options				**1**							
IRIG-B (Modulated) only				**2**							
Fibre Optic Converter only				**3**							
IRIG-B (Modulated) & Fibre Optic Converter				**4**							
Ethernet with 100Mbps fibre optic port				**6**							
2nd Rear Comms port (Courier EIA232 / EIA485 / KBUS)				**7**							
2nd Rear comms port (Courier EIA232 / EIA485 / KBUS) + IRIG-B (Modulated)				**8**							
Ethernet (100Mbit/s) plus IRIG-B (Modulated)				**A**							
Ethernet (100Mbit/s) plus IRIG-B (De-modulated)				**B**							
InterMiCOM + Courier Rear Port				**E**							
InterMiCOM + Courier Rear Port + IRIG-B modulated				**F**							
Redundant Ethernet Self-Healing Ring, 2 multi-mode fibre ports + IRIG-B (Modulated)				**G**							
Redundant Ethernet Self-Healing Ring, 2 multi-mode fibre ports + IRIG-B (Un-modulated)				**H**							
Redundant Ethernet RSTP, 2 multi-mode fibre ports + IRIG-B (Modulated)				**J**							
Redundant Ethernet RSTP, 2 multi-mode fibre ports + IRIG-B (Un-modulated)				**K**							
Redundant Ethernet Dual-Homing Star, 2 multi-mode fibre ports + IRIG-B (Modulated)				**L**							
Redundant Ethernet Dual-Homing Star, 2 multi-mode fibre ports + IRIG-B (Un-modulated)				**M**							
Redundant Ethernet Parallel Redundancy Protocol (PRP), 2 multimode fibre ports + IRIG-B (Modulated)				**N**							
Redundant Ethernet Parallel Redundancy Protocol (PRP), 2 multimode fibre ports + IRIG-B (Un-modulated)				**P**							
Redundant Ethernet (100Mbit/s) PRP or HSR and Dual IP, 2 LC ports + 1 RJ45 port + Modulated/Un-modulated IRIG-B				**Q**							
Redundant Ethernet (100Mbit/s) PRP or HSR and Dual IP, 3 RJ45 ports + Modulated/Un-modulated IRIG-B				**R**							
Ethernet (100Mbit/s), 1 RJ45 port + Modulated/Un-modulated IRIG-B				**S**							
Product Specific Options:											
Size 16 Case, 32 optos + 16 Relays					**A**						

Size 16 Case, 48 optos + 24 Relays					B						
Size 16 Case, 32 optos + 14 Relays + 16 High Break Relays					C						
Size 16 Case, 16 optos + 60 Relays					D						
Size 16 Case, 64 optos + 16 Relays					E						
Size 16 Case, 32 optos + 46 Relays					F						
Protocol Options:											
K-Bus						1					
Modbus						2					
IEC60870-5-103						3					
DNP3.0						4					
IEC61850 + Courier via rear RS485 port OR IEC 61850 Edition 1 and Edition 2 and Courier via rear K-Bus/RS485						6					
IEC61850 + IEC60870-5-103 via rear RS485 port OR IEC 61850 Edition 1 and Edition 2 and CS103 via rear port RS485						7					
DNP3.0 Over Ethernet						8					
Mounting Options:											
Panel Mounting							M				
Rack Mounting							N				
Language Options:											
English, French, German, Spanish								0			
English, French, German, Russian								5			
Chinese, English or French via HMI, with English or French only via Communications port								C			
Software Version Options:											
Unless specified the latest version will be delivered									**		
Customisation:											
Default										8	
Customised										9	
Design Suffix:											
Extended Phase 3 CPU											M
Extended Phase 2 CPU											K

Notes:

TECHNICAL DATA

CHAPTER 2

Date:	08/2015
Products covered by this chapter:	This chapter covers the specific versions of the MiCOM products listed below. This includes ***only*** the following combinations of Software Version and Hardware Suffix.
Hardware Suffix:	M
Software Version:	B0
Connection Diagrams:	10P849xx (xx = 01 to 06)

CONTENTS

Notes:

1 MICOM P849 INPUT & OUTPUT EXTENSION DEVICE

Input / Output (I/O)

32I/16O,
48I/24O,
32I/30O (16 high speed high break relays),
16I/60O,
64I/16O,
32I/46O.

Protocol options:

K-Bus
Modbus,
VDEW (IEC 60870-5-103)
DNP3.0
IEC61850 + Courier via rear RS485 port
IEC61850 + IEC 60870-5-103 via rear RS485 port
DNP3 over Ethernet with Courier rear port K-Bus/RS485 protocol

Hardware options:

IRIG-B input
Fibre optic converter (IEC60870-5-103)
IRIG-B input and Fibre optic converter (IEC60870-5-103)
Single Ethernet 100Mbit/s
Rear Comms + InterMiCOM
Rear Comms + IRIB-B + InterMiCOM
Single Ethernet (100Mbit/s) plus IRIG-B (Modulated)
Single Ethernet (100Mbit/s) plus IRIG-B (De-modulated)
IRIG-B (De-modulated)
InterMiCOM + Courier Rear Port *
InterMiCOM + Courier Rear Port + IRIG-B modulated *
Redundant Ethernet Self-Healing Ring, 2 multi-mode fibre ports + Modulated IRIG-B
Redundant Ethernet Self-Healing Ring, 2 multi-mode fibre ports + Un-modulated IRIG-B
Redundant Ethernet RSTP, 2 multi-mode fibre ports + Modulated IRIG-B
Redundant Ethernet RSTP, 2 multi-mode fibre ports + Un-modulated IRIG-B
Redundant Ethernet Dual-Homing Star, 2 multi-mode fibre ports + Modulated IRIG-B
Redundant Ethernet Dual-Homing Star, 2 multi-mode fibre ports + Un-modulated IRIG-B
Redundant Ethernet (100Mbit/s) PRP or HSR and Dual IP, 2 LC ports + 1 RJ45 port + Modulated/Un-modulated IRIG-B
Redundant Ethernet (100Mbit/s) PRP or HSR and Dual IP, 3 RJ45 ports + Modulated/Unmodulated IRIG-B
Ethernet (100Mbit/s), 1 RJ45 port + Modulated/Un-modulated IRIG-B

2 MECHANICAL SPECIFICATION

2.1 Design

Modular MiCOM Px40 platform relay, Size 16“ case (80TE)
Mounting is front of panel flush mounting.

2.2 Enclosure Protection

Per IEC 60529:

- IP 52 Protection (front panel) against dust and dripping water.
- IP 50 Protection for the rear and sides of the case against dust.
- IP 10 Product safety protection for the rear due to live connections on the terminal block.

2.3 Weight

MiCOM P849: 10.5 kg

3 TERMINALS

3.1 General Input/Output Terminals

For power supply, opto inputs, output contacts and RP1, COM1 and optional COM2 rear communications.
Located on general purpose (grey) blocks:
Threaded M4 terminals, for ring lug/terminal connection.

3.2 Case Protective Earth Connection

Two rear stud connections, threaded M4.
Must be earthed (grounded) using the protective (earth) conductor for safety, minimum earth wire size 2.5mm^2.

3.3 Front Port Serial PC Interface

EIA(RS)-232 DCE, 9 pin D-type female connector Socket SK1.
Courier protocol for interface to MiCOM S1 Studio software.
Isolation to SELV/ELV (Safety/Extra Low Voltage) level / PEB (Protective Equipotential Bonded).
Maximum cable length 15m.

3.4 Front Download/Monitor Port

EIA(RS)-232, 25 pin D-type female connector Socket SK2.
For firmware and menu text downloads.
Isolation to SELV/PEB level.

3.5 Rear Communications Port

EIA(RS)-485 signal levels, two wire connections located on general purpose block, M4 screw.
For screened twisted pair cable, multidrop, 1000 m max.
For Courier (K-Bus), IEC-60870-5-103 (not for P746/P849), MODBUS (not for P14x/P445/P44x/P54x/P547/P746/P841/P849) or DNP3.0 protocol (not for P24x/P746/P849) (ordering options).
Isolation to SELV (Safety Extra Low Voltage) level. Ethernet (copper and fibre).

3.6 Optional Second Rear Communication Port

EIA(RS)-232, 9 pin D-type female connector, socket SK4.
Courier protocol: K-Bus, EIA(RS)-232, or EIA(RS)485 connection.
Isolation to SELV level.
Maximum cable length 15m.

3.7 Optional Rear IRIG-B Interface modulated or un-modulated

BNC socket
SELV* rated circuit.
50 ohms coaxial cable.
*: PEB = Protective equipotential bonded
*: SELV = Safety/Separated extra low voltage
Both PEB and SELV circuits are safe to touch after a single fault condition.

3.8 Optional Rear Ethernet Connection for IEC 61850

3.8.1 10 Base T / 100 Base TX Communications

Interface in accordance with IEEE802.3 and IEC 61850

Isolation:	1.5 kV
Connector type:	RJ45
Cable type:	Screened Twisted Pair (STP)
Max. cable length:	100 m

3.8.2 100 Base FX Interface

Interface in accordance with IEEE802.3 and IEC 61850

Wavelength:	1310 nm
Fiber:	multi-mode 50/125 µm or 62.5/125 µm
Connector type:	ST/LC Connector Optical Interface (depending on model)

3.9 Optional Rear Redundant Ethernet Connection for IEC 61850

3.9.1 100 Base FX Interface

Interface in accordance with IEEE802.3 and IEC 61850

Wavelength:	1310 nm
Fiber:	multi-mode 50/125 µm or 62.5/125 µm
Connector type:	ST/LC Connector Optical Interface (depending on model)

3.9.1.1 Transmitter Optical Characteristics – 100 base FX Interface

Transmitter Optical Characteristics – 100 base FX interface
(T_A = 0°C to 70°C, V_{CC} = 4.75 V to 5.25 V)

Parameter	Sym	Min.	Typ.	Max	Unit
Output Optical Power BOL: 62.5/125 µm, NA = 0.275 Fiber EOL	P_{OUT}	–19 –20	–16.8	–14	dBm avg.
Output Optical Power BOL: 50/125 µm, NA = 0.20 Fiber EOL	P_{OUT}	–22.5 –23.5	–20.3	–14	dBm avg.
Optical Extinction Ratio				10 –10	% dB
Output Optical Power at Logic “0” State	P_{OUT} (“0”)			–45	dBm avg.
BOL – Beginning of life EOL – End of life					

Transmitter Optical Characteristics – 100 base FX interface

3.9.1.2 Receiver Optical Characteristics – 100 base FX Interface

Receiver Optical Characteristics – 100 base FX interface
(T_A = 0°C to 70°C, V_{CC} = 4.75 V to 5.25 V)

Parameter	Sym	Min.	Typ.	Max.	Unit
Input Optical Power Minimum at Window Edge	P_{IN} Min. (W)		–33.5	–31	dBm avg.
Input Optical Power Minimum at Eye Center	P_{IN} Min. (C)		–34.5	–31.8	dBm avg.
Input Optical Power Maximum	P_{IN} Max.	–14	–11.8		dBm avg.

Receiver Optical Characteristics – 100 base FX interface

3.10 Fiber Defect Connector (Watchdog Relay) – Redundant Ethernet board

Connector (3 terminals):	2 NC contacts	
Rated voltage:	250 V	
Continuous current:	5 A	
Short duration current:	30 A for 3 s	
Breaking capacity	DC:	50 W resistive
	DC:	25 W resistive
	AC:	1500 VA resistive (cos ϕ = unity)
	AC:	1500 VA inductive (cos ϕ = unity)

Subject to maxima of 5 A and 250 V

4 POWER SUPPLY

4.1 Auxiliary Voltage (Vx)

Three ordering options:
(i) Vx: 24 to 32 Vdc
(ii) Vx: 48 to 110 Vdc,
(iii) Vx: 110 to 250 Vdc, and 100 to 240 Vac (rms).

4.2 Operating Range

(i) 19 to 38V (dc only for this variant)
(ii) 37 to 150V (dc),
(iii) 87 to 300V (dc), 80 to 265V (ac).
With a tolerable ac ripple of up to 15% for a dc supply, per EN / IEC 60255-11, EN / IEC 60255-26.

4.3 Nominal Burden

Quiescent burden:	12 W
Additions for energized binary inputs/outputs:	
Per opto input:	0.09W…(24 to 54V), 0.12W...(110/125V), 0.19W...(220/250V).
Per energized output relay:	0.13W
Per energized high break output relay:	0.73W

4.4 Power-up Time

Main Processor including User Interface and front access port	< 8 s.
Ethernet Communications	<120 s.

4.5 Power Supply Interruption

Per IEC 60255-11, EN / IEC 60255-26

The relay will withstand a 20 ms interruption in the DC auxiliary supply, without de-energizing.

Per IEC 61000-4-11, EN / IEC 60255-26

The relay will withstand a 20 ms interruption in an AC auxiliary supply, without de-energizing.

Note	*The use of a E124 extends these limits*

In addition to IEC 60255-11 compliance, P746/P849 withstands:

DC Power supply voltage	DC Power supply interruption
24V	20ms
48V	20ms with Vx ordering option (ii)
110V	200ms with Vx ordering option (ii), 50ms with Vx ordering option (iii)
220V	200ms

4.6 Battery Backup

Front panel mounted.
Type ½ AA, 3.6 V Lithium Thionyl Chloride (SAFT advanced battery reference LS14250).
Battery life (assuming relay energized for 90% time) >10 years.

4.7 Field Voltage Output

Regulated 48 Vdc
Current limited at 112 mA maximum output

4.8 Digital (“Opto”) Inputs

Universal opto inputs with programmable voltage thresholds. May be energized from the 48V field voltage, or the external battery supply.

Rated nominal voltage: 24 to 250Vdc
Operating range: 19 to 265Vdc
Withstand: 300Vdc.
Nominal pick-up and reset thresholds:
- Pick-up: approx. 70% of battery nominal set,
- Reset: approx. 66% of battery nominal set.

Recognition time: 7ms

5 OUTPUT CONTACTS

5.1 Standard Contacts

General purpose relay outputs for signalling, tripping and alarming:

Rated voltage:	300 V	
Continuous current:	10 A	
Short-duration current:	30 A for 3 s	
Making capacity:	250A for 30 ms	
Breaking capacity:	DC:	50W resistive
	DC:	62.5W inductive (L/R = 50ms)
	AC:	2500VA resistive (cos ϕ = unity)
	AC:	2500VA inductive (cos ϕ = 0.7)
Response to command:	< 5ms	
Durability:	Loaded contact: 10000 operations minimum,	
	Unloaded contact: 100000 operations minimum.	

5.2 Fast Operation and High Break Contacts

Dedicated purpose relay outputs for tripping: Uses IGBT technology

Make and Carry:	30 Amps for 3 sec, 30A @ 250V resistive
Carry:	250 Amps dc for 30ms
Continuous Carry:	10 Amps dc
Break Capacity:	10 Amps @ 250V resistive (10,000 operations)
	10 Amps @ 250V L/R=40ms
Operating time:	<200us & Reset time: 7.5ms

5.3 Watchdog Contacts

Non-programmable contacts for relay healthy or relay fail indication:

Breaking capacity:	DC: 30 W resistive
	DC: 15 W inductive (L/R = 40 ms)
	AC: 375 VA inductive (cos ϕ = 0.7)

5.4 IRIG-B 12X Interface (Modulated)

External clock synchronization to IRIG standard 200-98, format B12x
Input impedance 6 kΩ at 1000 Hz
Modulation ratio: 3:1 to 6:1
Input signal, peak-peak: 200 mV to 20 V

5.5 IRIG-B 00X Interface (Un-modulated)

External clock synchronization to IRIG standard 200-98, format B00X.
Input signal TTL level
Input impedance at dc 10 kΩ

6 ENVIRONMENTAL CONDITIONS

6.1 Ambient Temperature Range

Per IEC 60255-6: 1988

Operating temperature range:	-25°C to +55°C (or -13°F to +131°F).
Storage and transit:	-25°C to +70°C (or -13°F to +158°F).
Tested as per IEC 60068-2-1: 2007	-25°C (-13°F) storage (96 hours)
	-40°C (-40°F) operation (96 hours)
IEC 60068-2-2: 2007	+85°C (+185°F) storage (96 hours)

6.2 Ambient Humidity Range

Per IEC 60068-2-78: 2001:
56 days at 93% relative humidity and +40°C

Per IEC 60068-2-30: 2005:
Damp heat cyclic, six (12 + 12) hour cycles, 93% RH, +25 to +55°C

6.3 Corrosive Environments

Per IEC 60068-2-60: 1995, Part 2, Test Ke, Method (class) 3
Industrial corrosive environment/poor environmental control, mixed gas flow test.
21 days at 75% relative humidity and +30°C
Exposure to elevated concentrations of H_2S, NO_2, Cl_2 and SO_2.

7 TYPE TESTS

7.1 Insulation

As for IEC 60255-27: 2005 (incorporating corrigendum March 2007):
Insulation resistance > 100 MΩ at 500 Vdc
(Using only electronic/brushless insulation tester).

7.2 Creepage Distances and Clearances

Per IEC 60255-27: 2005 Pollution degree 3
overvoltage category III
impulse test voltage 5 kV

7.3 High Voltage (Dielectric) Withstand

EIA(RS)232 ports excepted.

Per IEC 60255-27: 2005, 2 kV rms AC, 1 minute:

Between all case terminals connected together, and the case earth.
Also, between all terminals of independent circuits.
1 kV rms AC for 1 minute, across open watchdog contacts.
1 kV rms AC for 1 minute, across open contacts of changeover output relays.

Per ANSI/IEEE C37.90-1989 (reaffirmed 1994):

1.5 kV rms AC for 1 minute, across open contacts of changeover output relays.

7.4 Impulse Voltage Withstand Test

Per IEC 60255-27: 2005
Front time: 1.2 µs, Time to half-value: 50 µs,
Peak value: 5 kV, 0.5 J
Between all terminals, and all terminals and case earth.

8 ELECTROMAGNETIC COMPATIBILITY (EMC)

8.1 1 MHz Burst High Frequency Disturbance Test

As for EN 60255-22-1: 2008, Class III,
Common-mode test voltage: 2.5 kV,
Differential test voltage: 1.0 kV,
Test duration: 2 s
Source impedance: 200 Ω
(EIA(RS)-232 ports excepted).

8.2 100 kHz Damped oscillatory Test

EN 61000-4-18: 2007: Level 3
Common mode test voltage: 2.5 kV
Differential mode test voltage: 1 kV

8.3 Immunity to Electrostatic Discharge

Per IEC 60255-22-2: 1997, Class 4,
15kV discharge in air to user interface, display, and exposed metalwork.
Per IEC 60255-22-2: 1997, Class 3,
8kV discharge in air to all communication ports.
6kV point contact discharge to any part of the front of the product.

8.4 Electrical Fast Transient or Burst Requirements

Per IEC 60255-22-4: 2002 and EN 61000-4-4: 2004.
Test severity: Class III and IV:
Amplitude: 2 kV, burst frequency 5kHz (Class III),
Amplitude: 4 kV, burst frequency 2.5kHz (Class IV).
Applied directly to auxiliary supply, and applied to all other inputs. (EIA RS232 ports excepted).
Amplitude: 4 kV, burst frequency 5kHz (Class IV).
Applied directly to auxiliary supply.

8.5 Surge Withstand Capability

As for IEEE/ANSI C37.90.1: 2002:
4 kV fast transient and 2.5 kV oscillatory applied directly across each output contact, optically isolated input, and power supply circuit.

8.6 Surge Immunity Test

EIA(RS)232 ports excepted.
Per IEC 61000-4-5: 2005 Level 4.
Time to half-value: 1.2/50 µs.
Amplitude: 4 kV between all groups and protective (earth) conductor terminal.
Amplitude: 2 kV between terminals of each group.

8.7 Immunity to Radiated Electromagnetic Energy

Per IEC 60255-22-3: 2008, Class III:
Test field strength, frequency band 80 to 1000 MHz:
10 V/m,
Test using AM: 1 kHz / 80%,
Spot tests at 80, 160, 450, 900 MHz
Per IEEE/ANSI C37.90.2: 2004:
25MHz to 1000MHz, zero and 100% square wave modulated.
Field strength of 35V/m.

8.8 Radiated Immunity from Digital Communications

EN61000-4-3: 2010, Level 4:
Test field strength, frequency band 800 to 960 MHz, and 1.4 to 2.0 GHz: 30 V/m,
Test using AM: 1 kHz/80%.

8.9 Radiated Immunity from Digital Radio Telephones

EN 61000-4-3: 2002: 10 V/m, 900 MHz and 1.89 GHz.

8.10 Immunity to Conducted Disturbances Induced by Radio Frequency Fields

EN 61000-4-6: 2008, Level 3, Disturbing test voltage: 10 V.

8.11 Power Frequency Magnetic Field Immunity

As for EN / IEC 61000-4-8, Level 5,
100 A/m applied continuously, 1000 A/m applied for 3 s.
As for EN / IEC 61000-4-9, Level 5,
1000 A/m applied in all planes.
As for EN / IEC 61000-4-10, Level 5,
100 A/m applied in all planes at 100 kHz and 1 MHz with a burst duration of 2 s.

8.12 Conducted Emissions

Per EN 55022:2006:2007 and EN 60255-25:2000:
0.15 – 0.5MHz, 79dBμV (quasi peak) 66dBμV (average)
0.5 – 30MHz, 73dBμV (quasi peak) 60dBμV (average).

8.13 Radiated Emissions

Per EN 55022:2006+A1:2007 and EN 60255-25:2000:
30 - 230MHz, 40dBμV/m at 10m measurement distance
230 – 1GHz, 47dBμV/m at 10m measurement distance.

9 EU DIRECTIVES

9.1 EMC Compliance

2004/108/EC:
Compliance to the European Commission Directive on EMC is claimed via the Technical Construction File route. Product Specific Standards were used to establish conformity:
EN 60255-26

9.2 Product Safety

2006/95/EC:
Compliance to the European Commission Low Voltage Directive. Compliance is demonstrated by reference to generic safety standards:
EN60255-27: 2005 (incorporating corrigendum March 2007)

9.3 R&TTE compliance

Radio and Telecommunications Terminal Equipment (R&TTE) directive 99/5/EC.

Compliance demonstrated by compliance to both the EMC directive and the Low voltage directive, down to zero volts.

Applicable to rear communications ports.

10 MECHANICAL ROBUSTNESS

10.1 Vibration Test

Per EN / IEC 60255-21-1	Response Class 2 Endurance Class 2

10.2 Shock and Bump

Per EN / IEC 60255-21-2	Shock response Class 2 Shock withstand Class 1 Bump Class 1

10.3 Seismic Test

Per EN / IEC 60255-21-3:	Class 2

11 IRIG-B AND REAL TIME CLOCK

11.1 Modulated IRIG-B:

Modulation ratio:	1/3 or 1/6
Input signal peak-peak amplitude:	200 mV to 20 V
Input impedance at 1000Hz:	6000 Ω
External clock synchronization:	Conforms to IRIG standard 200-98, format B

11.2 Un-modulated IRIG-B:

External clock synchronization to IRIG standard 200-98, format B00X.
Input signal TTL level
Input impedance at dc 10 kΩ

11.3 Performance Accuracy (for Modulated and Un-modulated versions)

Real time clock accuracy: < ±2 seconds/day

12 DISTURBANCE RECORDS

Accuracy

Waveshape:	Comparable with applied quantities
Duration:	±2%
Trigger position:	±2% (minimum trigger 100ms)

Reference conditions

Ambient temperature:	20°C

13 IEC 61850 ETHERNET DATA

13.1 10Base T /100Base TX Communications

Interface in accordance with IEEE802.3 and IEC 61850
Isolation: 1.5 kV
Connector type: RJ45
Cable type: Screened Twisted Pair (STP)
Max. cable length: 100 m

13.2 100Base FX Interface

Interface in accordance with IEEE802.3 and IEC 61850
Wavelength: 1310 nm
Fiber: multi-mode 50/125 µm or 62.5/125 µm
Connector type: ST/LC Connector Optical Interface (depending on model)

13.2.1 Transmitter Optical Characteristics

Transmitter Optical Characteristics – 100 base FX interface
(T_A = 0°C to 70°C, V_{CC} = 4.75 V to 5.25 V)

Parameter	Sym	Min.	Typ.	Max	Unit
Output Optical Power BOL: 62.5/125 µm, NA = 0.275 Fiber EOL	P_{OUT}	–19 –20	–16.8	–14	dBm avg.
Output Optical Power BOL: 50/125 µm, NA = 0.20 Fiber EOL	P_{OUT}	–22.5 –23.5	–20.3	–14	dBm avg.
Optical Extinction Ratio				10 –10	% dB
Output Optical Power at Logic “0” State	P_{OUT} (“0”)			–45	dBm avg.
BOL – Beginning of life EOL – End of life					

Transmitter Optical Characteristics – 100 base FX interface

13.2.2 Receive Optical Characteristics

Receiver Optical Characteristics – 100 base FX interface
(T_A = 0°C to 70°C, V_{CC} = 4.75 V to 5.25 V)

Parameter	Sym	Min.	Typ.	Max.	Unit
Input Optical Power Minimum at Window Edge	P_{IN} Min. (W)		–33.5	–31	dBm avg.
Input Optical Power Minimum at Eye Center	P_{IN} Min. (C)		–34.5	–31.8	dBm avg.
Input Optical Power Maximum	P_{IN} Max.	–14	–11.8		dBm avg.

Receiver Optical Characteristics – 100 base FX interface

13.3 GOOSE Performances

The follow data is the average value with 100 times test.

- Subscribe 1 Virtual Input and publish 1 Virtual Output: < 4ms
- Subscribe 1 Virtual Input and trigger 1 output relay: < 8ms

- Subscribe 16 Virtual Inputs and publish 16 Virtual Outputs: < 8ms
- Subscribe 16 Virtual Inputs and trigger 16 output relays: < 11ms

- Subscribe 32 Virtual Inputs and publish 32 Virtual Outputs: < 16ms
- Subscribe 32 Virtual Inputs and trigger 32 output relays: < 16ms

14 SETTINGS AND RECORDS LIST

14.1 Global Settings (System Data)

Global Settings (System Data)

Language:	English/French/German/Spanish/Chinese
Frequency:	50/60 Hz

14.2 Date and Time

IRIG-B Sync:	Disabled/Enabled
Battery Alarm:	Disabled/Enabled

14.3 Configuration

Setting Group:	Select via Menu or Select via Opto
Active Settings:	Group 1/2/3/4
Setting Group 1:	Disabled/Enabled
Setting Group 2:	Disabled/Enabled
Setting Group 3:	Disabled/Enabled
Setting Group 4:	Disabled/Enabled
Record Control:	Visible/Invisible
Disturb recorder:	Visible/Invisible
Measur't setup:	Visible/Invisible
Comms setting	Visible/Invisible
Commission tests:	Visible/Invisible
Input Labels:	Visible/Invisible
Output Labels:	Visible/Invisible
Control inputs:	Visible/Invisible
Ctrl I/P Config:	Visible/Invisible
Direct Acces:	Enabled/Disabled hotkey only/ CB cntrl only
InterMiCOM	Enabled/Disabled
IEC Goose	Visible/Invisible
Function key:	Visible/Invisible
LCD Contrast:	(Factory pre-set)
RP1 Read Only:	Disabled/Enabled
RP2 Read Only:	Disabled/Enabled
NIC Read Only:	Disabled/Enabled

14.4 Record Control

Records for the last 512 events

14.5 Disturb. Recording

Duration: Settable from 0.1 to 10.5s
Trigger Position: 0...100% (step 0.1%)
Trigger Mode: Single/Extended
32 Digital Inputs
Selected binary channel assignment from any DDB status point within the device (opto input, output contact, alarms, starts, trips, controls, logic…).
Sampling frequency: 1000Hz

14.6 Communications

14.6.1 Courier Protocol

Courier protocol: Protocol indicated
RP1 Address:
- Courier: 0 to 255 (step 1)
- Modbus: 1 to 247 (step 1)
- IEC60870-5-103: 0 to 254 (step 1)
- DNP3.0: 0 to 65534 (step 1)

RP1 Inactiv timer: 1mn to 30 mn (step 1mn)
Physical link: RS485, Fibre optic
RP1 Status
RP1 Port configuration: Kbus/EIA(RS)485
RP1 comms mode: IEC60870 FT1.2 10-Bit no parity
RP1 Baud Rate: 9600/19200/38400 bits/s

14.6.2 IEC60870-5-103 Protocol

IEC60870-5-103 protocol: Protocol indicated
RP1 Address: 7 to 34 (step 1)
RP1 Inactiv timer: 1mn to 30 mn (step 1mn)
Baud Rate: 9600/19200/38400 bits/s
Measurement period: 1 to 60s (step 1s)
CS103 blocking: Disabled,
Monitor blocking,
Command blocking.
RP1 Status
RP1 Port configuration: Kbus/EIA(RS)485
RP1 comms mode: IEC60870 FT1.2 10-Bit no parity
RP1 Baud Rate: 9600/19200/38400 bits/s
IEC 103 over Ethernet should also be available

14.6.3 MODBUS Protocol

Modbus protocol:	Protocol indicated
RP1 Address:	7 to 34 (step 1)
RP1 Inactiv timer:	1mn to 30 mn (step 1mn)
Baud Rate:	9600/19200/38400 bits/s
Parity:	Odd/Even/None
Physical link:	RS485/Fibre optic
Date/Time Format:	Enabled/Disabled
RP1 Status	
RP1 Port configuration:	Kbus/EIA(RS)485
RP1 comms mode:	IEC60870 FT1.2 10-Bit no parity
RP1 Baud Rate:	9600/19200/38400 bits/s

14.6.4 DNP3.0 Protocol

DNP3.0 protocol:	Protocol indicated
RP1 Address:	7 to 34 (step 1)
RP1 Inactiv timer:	1mn to 30 mn (step 1mn)
Baud Rate:	9600/19200/38400 bits/s
Parity:	Odd/Even/None
Measurement period:	1 to 60s (step 1s)
Physical link:	RS485/Fibre optic
Time Synhronization:	Enabled/Disabled
Date/Time Format:	Enabled/Disabled
RP1 Status	
RP1 Port configuration:	Kbus/EIA(RS)485
RP1 comms mode:	IEC60870 FT1.2/10-Bit no parity
RP1 Baud Rate:	9600/19200/38400 bits/s
Scale Value indicated	
Message Gap:	0 to 50ms (step 1ms)
DNP Need Time:	1 to 30 (step 1)
DNP Application fragment size:	100 to 2048 (step 1)
DNP Application fragment timeout:	1s to 120s (step 1s)
DNB SBO timeout:	1s to 10s (step 1s)
DNP link timeout:	0 to 120s (step 1s)

14.6.5 Ethernet Port, IEC61850 Protocol

Ethernet port, IEC61850 protocol:
Protocol indicated
Protocol & Scale value indicated,

Network Interface Card (NIC) protocol:	Courier/IEC60870-5-103/Modbus/DNP3.0
NIC MAC Adress indicated,	
NIC tunnel timeout:	1 to 30mn (step 1mn)

14.6.6 Ethernet Port, DNP3.0 Protocol

Ethernet port, DNP3.0 protocol:
Protocol, IP address, subnet mask, NIC MAC address and Gateway address indicated,
Ethernet port, IEC60870-5-103 protocol:
Protocol, Scale value, NIC protocol & NIC MAC address indicated, NIC tunnel timeout & Link report

DNP time synchro:	Enabled/Disabled
DNP Meas scaling:	Primary/Secondary/Normalized
RP1 Address:	7 to 34 (step 1)
RP1 Inactiv timer:	1mn to 30 mn (step 1mn)
Baud Rate:	9600/19200/38400 bits/s
Parity:	Odd/Even/None
NIC tunnel timeout:	1 to 30mn (step 1mn)
NIC Link Report:	Alarm/Even/None
SNTP parameters:	Primary and Secondary SNTP addresses displayed
SNTP poll rate:	64 to 1024s (step 1s)
SNTP need time:	1 to 30mn (step 1mn)
SNTP Application Fragment size:	100 to 2048 (step 1)
SNTP Application fragment timeout:	1s to 120s (step 1s)
SNTP SBO timeout:	1s to 10s (step 1s)

14.6.7 Second Rear Port Connection Setting

Second rear port connection setting:
Protocol and Status indicated

RP2 Port configuration:	Kbus/EIA(RS)485/EIA RS232
RP2 comms mode:	IEC60870 FT1.2/10-Bit no parity
RP2 Address:	0 to 255 (step 1)
RP2 Inactivity timer:	1 to 30mn (step 1mn)
RP2 Baud Rate:	9600/19200/38400 bits/s

14.7 Optional Second Rear Communication

RP2 Protocol:	Courier (fixed)
RP2 Port Config:	Courier over EIA(RS)232 / Courier over EIA(RS)485 / K-Bus
RP2 Comms. Mode:	IEC60870 FT1.2 Frame / 10-Bit NoParity
RP2 Address:	0…255
RP2 InactivTimer:	1…30 mins
RP2 Baud Rate:	9600 / 19200 / 38400 bits/s

Note	*If RP2 Port Config is K Bus the baud rate is fixed at 64 kbits/s*

RP2 Read Only: Disabled/Enabled

14.8 Optional Ethernet Port

NIC Tunl Timeout:	1...30 mins
NIC Link Report:	Alarm/Event/None
NIC Link Timeout:	0.1...60 s

NIC Read Only: Disabled/Enabled

14.9 Commission Tests

Opto I/P Status:	(data) indicates the status of the opto inputs.
Rly O/P Status:	(data) indicates the status of the output relays.
Test Port Status:	(data) indicates the status of monitor bits 1 to 8.
Monitor bit 1:	Binary function link strings, selecting which
(up to):	DDB signals have their status visible in the
Monitor bit 8:	Commissioning menu, for test purposes
Test Mode:	Disabled Test Mode Blocked Contacts
Test Pattern:	Configuration of which output contacts are to be energized when the contact test is applied

Contact test:	No operation/Apply test/Remove test/LEDs test
Autoreclose test:	No operation/ 3-pole test/Pole A, B or C test
Red or Green LED status visible:	DDB31-0 to DDB 2047-2016 status visible.

14.10 Opto Configuration

Opto input voltage range: 24-27V / 30-34V / 48-54V / 110-125V / 220-250V / Custom
Opto Input 1 (up to # = max. opto no. fitted)
Custom options allow independent thresholds to be set per opto, from the same range as above

15 HOTKEYS AND CONTROL INPUTS

15.1 Control Inputs Operation (CTRL inputs menu)

Status of control inputs indication,

Control inputs operation: Set/Reset/No operation

Control Inputs configuration (CTRL I/P config. Menu):

The control inputs can be individually assigned to the hotkeys by setting,

Control input configuration: Latched/Pulsed

Following text displayed in the hotkey menu can be set:

Set/Reset / In/Out /
Enabled/Disabled / On/Off

15.2 Opto Input Labels (Opto I/P Labels menu)

User defined text string to describe the function of the particular opto input.

16 TELEPROTECTION (INTERMICOM COMMS)

Source Address:	1…10
Received Address:	1…10
Data Rate:	600 / 1200 / 2400 / 4800 / 9600 / 19200 baud
Loopback Mode:	Disabled/Internal/External
Test Pattern:	Configuration of which InterMiCOM signals are to be energized when the loopback test is applied.

Channels statistics:	Visible/Invisible Nbr of tripping messages received Nbr blocking messages received, Number of messages received: tripping, blocking, total and incorrect, Lost messages, Elapsed time, Reset statistics: Yes/No
Channel diagnostics:	Visible/Invisible “Data carrier detect” status, Frame synchronization status, Message status, Channel status, InterMiCOM hardware status.
User defined test pattern, Loopback status	

17 INTERMICOM CONFIGURATION

IM Msg Alarm Level:	0 to 100.0% (step 1%)	
InterMiCOM Command Types:		
IM1, IM2, IM3 and IM4 Command types:		Disabled/Direct/Blocking
IM5 Cmd Type:		Disabled/Permissive/Direct
IM6, IM7 and IM8 Command types:		Disabled/Permissive/Direct
Fallback Mode:	Default/Latched	
Default Value:	/1	
Frame Synchronization Time:	10ms to 1.50s (step 10ms)	

18 FUNCTION KEYS AND LABELS

18.1 Function Keys

Fn. Key Status 1: (up to): Fn. Key Status 10	Disable / Lock / Unlock / Enable
Fn. Key 1 Mode: (up to): Fn. Key 10 Mode:	Toggled/Normal
Fn. Key 1 Label: (up to): Fn. Key 10 Label:	User defined text string to describe the function of the particular function key

18.2 Opto Input Labels

Opto Input 1 to 64 (depending on the model): Input L1 to Input L64
User-defined text string to describe the function of the particular opto input.

18.3 Outputs Labels

Relay 1 to 60 (depending on the model): Output R1 to Output R60
User-defined text string to describe the function of the particular relay output contact.

18.4 IED Configurator (IEC61850)

Switch Conf. Bank:	No Action/Switch Banks
IP Address 1	0.0.0.0. The default IP address is encoded from the MAC address. 169.254.0.xxx, xxx = mod (The last byte of MAC1, 128) + 1.
Subnet Mask 1	255.255.255.0
Gateway 1	169.254.0.250

IP Address 2 0.0.0.0. The default IP address is encoded from the MAC address. 169.254.1.yyy, yyy = mod (The last byte of MAC2, 128) + 1.

Subnet Mask 2	255.255.255.0
Gateway 2	169.254.1.250

18.5 IEC61850 GOOSE

Test Mode:	Disabled/Pass Through/Forced
VOP Test Pattern:	0x00000000... 0xFFFFFFFF
Ignore Test Flag:	No/Yes
GoEna:	0x0000000000000000(bin)... 0x1111111111111111(bin)
Pub.Simul.Goose:	0x0000000000000000(bin)... 0x1111111111111111(bin)
Sub.Simon.Goose:	No/Yes

Notes:

GETTING STARTED

CHAPTER 3

Date:	08/2015
Products covered by this chapter:	This chapter covers the specific versions of the MiCOM products listed below. This includes ***only*** the following combinations of Software Version and Hardware Suffix.
Hardware Suffix:	M
Software Version:	B0
Connection Diagrams:	10P849xx (xx = 01 to 06)

CONTENTS

TABLES

FIGURES

1 INTRODUCTION TO THE RELAY

Warning **Before carrying out any work on the equipment, you should be familiar with the contents of the Safety Information chapter/safety guide SFTY/4LM/C11 or later issue, the Technical Data chapter and the ratings on the equipment rating label.**

1.1 User Interfaces and Menu Structure

The settings and functions of the MiCOM P849 input & output extension device can be accessed both from the front panel keypad and LCD, and via the front and rear communication ports. Information on each of these methods is given in this section to describe how to start using the relay.

1.2 Front Panel

The following figure shows the front panel of the relay; the hinged covers at the top and bottom of the front panel are shown open. An optional transparent front cover physically protects the front panel. With the cover in place, access to the user interface is read-only. Removing the cover allows access to the relay settings and does not compromise the protection of the product from the environment.

When editing relay settings, full access to the relay keypad is needed. To remove the front panel:

1. Open the top and bottom covers, then unclip and remove the transparent cover. If the lower cover is secured with a wire seal, remove the seal.
2. Using the side flanges of the transparent cover, pull the bottom edge away from the relay front panel until it is clear of the seal tab.
3. Move the cover vertically down to release the two fixing lugs from their recesses in the front panel.

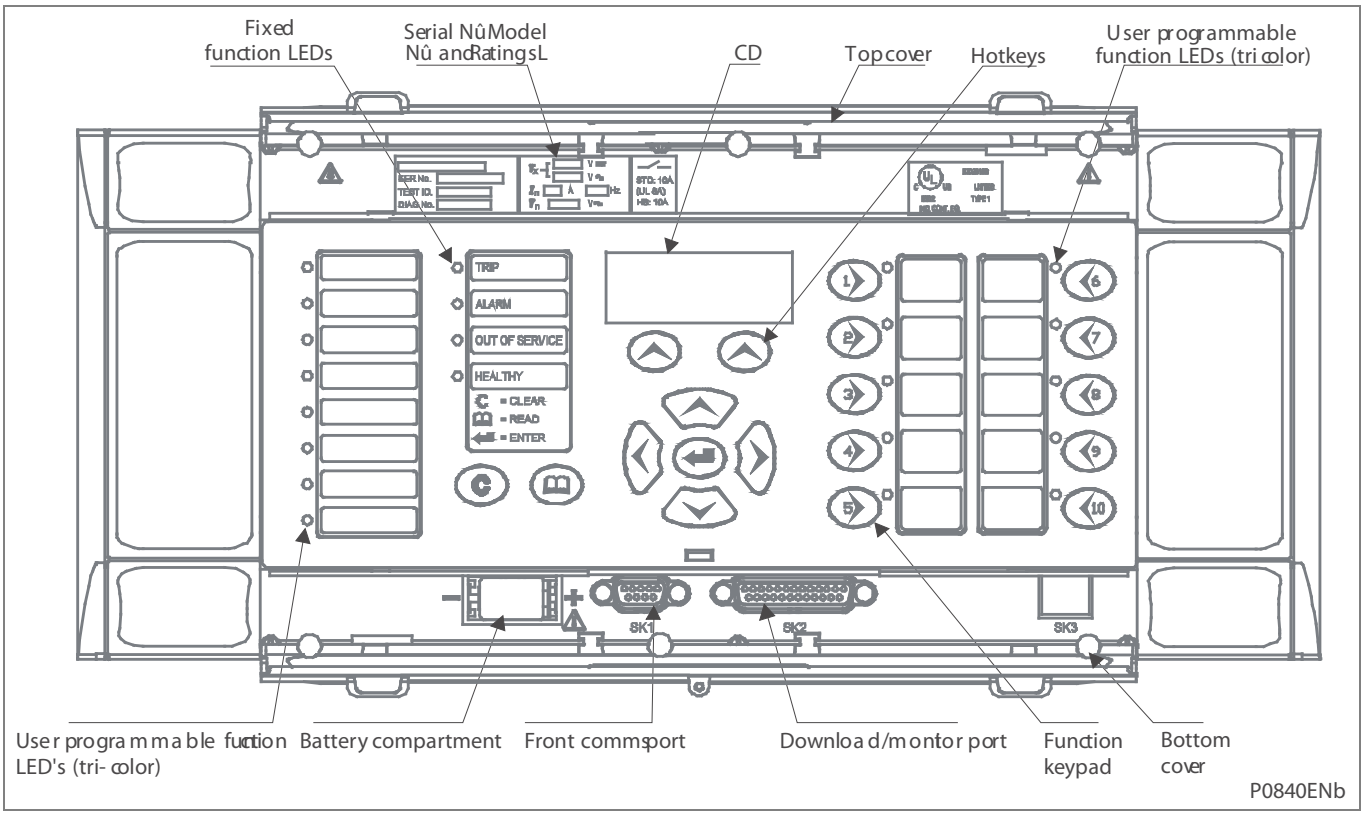

Figure 1 - MiCOM P849 front view

The front panel of the relay includes the following, as shown in the previous figures:

- A 16-character by 3-line alphanumeric Liquid Crystal Display (LCD).
- A 9-key keypad with 4 arrow keys (⟨, ⟩, ⌃ and ⌄), an enter key (↵), a clear key (ⓒ), a read key (📖), 2 hot keys (⌃).
- 12 LEDs; 4 fixed function LEDs on the left hand side of the front panel and 8 programmable function LEDs on the right hand side.

Function Key Functionality:

- The relay front panel has control keys with programmable LEDs for local control. Factory default settings associate specific relay functions with these 10 direct-action keys and LEDs, e.g. Enable or Disable the auto-recloser function. Using programmable scheme logic, the user can change the default functions of the keys and LEDs to fit specific needs.
- Hotkey functionality:
  - **SCROLL** starts scrolling through the various default displays.
  - **STOP** stops scrolling the default display.

Under the top hinged cover:

- The relay serial number, and the relay's current and voltage rating information

Under the bottom hinged cover:

- Battery compartment to hold the 1/2 AA size battery which is used for memory back-up for the real time clock, event, fault and disturbance records
- A 9-pin female D-type front port for communication with a PC locally to the relay (up to 15m distance) via an EIA(RS)232 serial data connection
- A 25-pin female D-type port providing internal signal monitoring and high speed local downloading of software and language text via a parallel data connection

1.2.1 LED Indications

1.2.1.1 Fixed Function

The Fixed Function LEDs on the left-hand side of the front panel show these conditions:

- **Trip (Red)** indicates that the relay has issued a trip signal. It is reset when the associated fault record is cleared from the front display.
- **Alarm (Yellow)** flashes when the relay has registered an alarm. This may be triggered by a fault, event or maintenance record. The LED will flash until the alarms have been accepted (read), after which the LED will change to constant illumination, and will extinguish, when the alarms have been cleared.
- **Out of Service** (Yellow) is ON when the relay is not fully operational.
- **Healthy (Green)** indicates that the relay is in correct working order, and should be on at all times. It will be extinguished if the relay's self-test facilities show that there is an error with the relay's hardware or software. The state of the healthy LED is reflected by the watchdog contact at the back of the relay.

To improve the visibility of the settings via the front panel, the LCD contrast can be adjusted using the "LCD Contrast" setting in the CONFIGURATION column. This should only be necessary in very hot or cold ambient temperatures.

1.2.1.2 Programmable LEDs

All the programmable LEDs are tri-colour and can be programmed to show red, yellow or green depending on the requirements. The eight programmable LEDs on the left are suitable for programming alarm indications. The 10 programmable LEDs physically associated with the function keys, are used to show the status of the associated key's function. The default behaviour and mappings for each of the programmable LEDs are as shown in this table:

The default functions for the function keys are:

- Function key 1: GOOSE testing mode (toggled mode. The yellow LED lit when ON)
- Function key 6: send testing mode message (toggled mode. LED is controlled by other DDB)
- Function key 10: Trigger precise event recorder

The other Function keys are not assigned in the default configuration.

1.3 Rear Panel

Examples of the rear panel of the relay are shown in the following figure. All current and voltage signals, digital logic input signals and output contacts are connected at the rear of the relay. Also connected at the rear is the twisted pair wiring for the rear EIA(RS)485 communication port; the IRIG-B time synchronising input is optional, the Ethernet rear communication board with copper and fiber optic connections or the second communication are optional.

Refer to the wiring diagrams in the 'Connection Diagrams' chapter for further details.

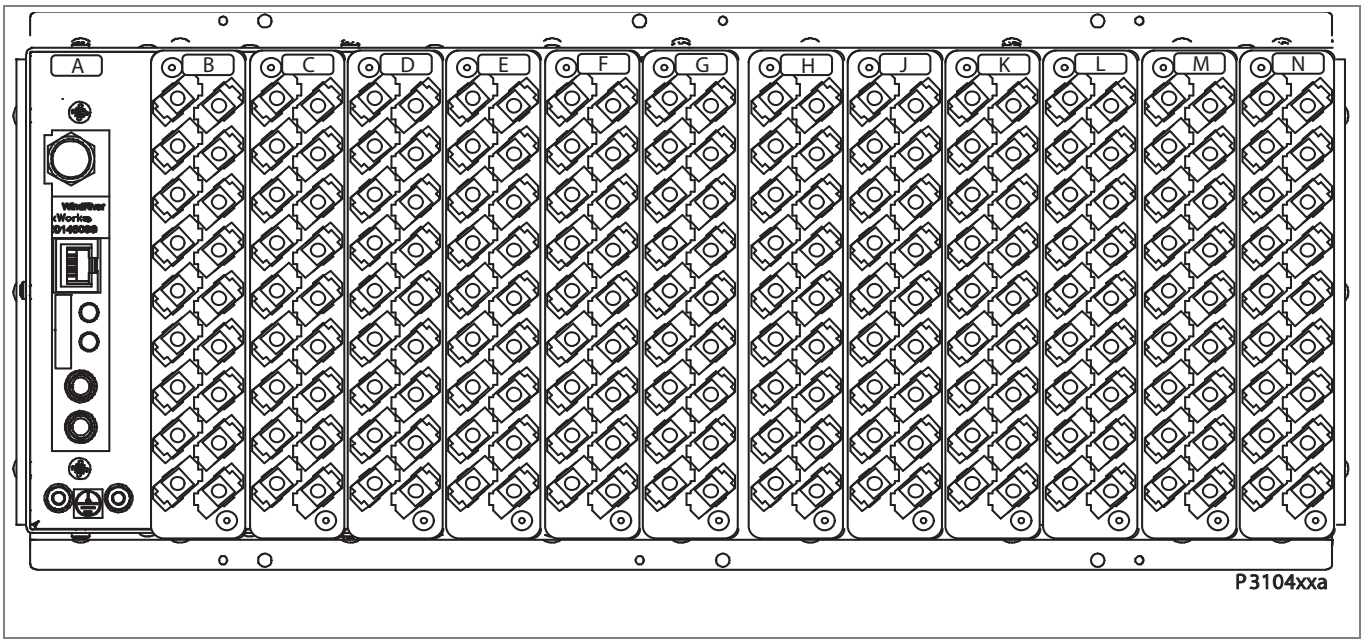

A –	IRIG B / Ethernet / COMMS	H –	Relay \ Opto \ high break
B –	Opto	J –	Relay \ Opto \ high break
C –	Opto	K –	Relay \ Opto \ high break
D –	Opto	L –	Relay board
E –	Relay \ Opto	M –	Relay board
F –	Relay \ Opto	N	Power supply board
G –	Relay \ Opto \ high break		

Figure 2 - P849 – rear view 80TE

1.4 Connection and Power-Up

Before powering-up the relay, confirm that the relay power supply voltage and nominal ac signal magnitudes are appropriate for your application. The relay serial number, and the relay's current and voltage rating, power rating information can be viewed under the top hinged cover. The relay is available in the auxiliary voltage versions shown in this table:

Nominal Ranges		Operative Ranges	
dc	**ac**	**dc**	**ac**
24 – 32 V dc	-	19 - 38 V dc	-
48 – 110 V dc	-	37 - 150 V dc	-
110 – 250 V dc **	100 – 240 V ac rms **	87 - 300 V dc	80 - 265 V ac
** rated for ac or dc operation			

Table 1 - Nominal and Operative ranges for dc and ac

Please note that the label does not specify the logic input ratings. These relays are fitted with universal opto isolated logic inputs that can be programmed for the nominal battery voltage of the circuit of which they are a part. See 'Universal Opto input' in the Product Design (Firmware) section for more information on logic input specifications.

Note	*The opto inputs have a maximum input voltage rating of 300V dc at any setting.*

Once the ratings have been verified for the application, connect external power capable of delivering the power requirements specified on the label to perform the relay familiarization procedures. Previous diagrams show the location of the power supply terminals - please refer to the ***Installation*** and ***Connection Diagrams*** chapters for all the details, ensuring that the correct polarities are observed in the case of dc supply.

2 USER INTERFACES AND SETTINGS OPTIONS

The relay has these user interfaces:

- The front panel user interface via the LCD and keypad
- The front port which supports Courier communication
- The rear port which supports these protocols:
  - Courier
  - MODBUS
  - IEC 60870-5-103
  - DNP3
  - IEC 61850
- The optional Ethernet port which supports IEC 61850

The measurement information and relay settings that can be accessed from the different interfaces are shown in this table:

	Keypad or LCD	Courier	MODBUS	IEC870-5-103	DNP3.0	IEC61850
Display & modification of all settings	Yes	Yes	Yes	Yes		
Digital I/O signal status	Yes	Yes	Yes	Yes	Yes	Yes
Display/extraction of measurements	Yes	Yes	Yes	Yes	Yes	Yes
Display/extraction of fault records	Yes	Yes	Yes	Yes	Yes	Yes
Extraction of disturbance records		Yes	Yes	Yes	Yes	Yes
Programmable scheme logic settings		Yes				
Reset of fault & alarm records	Yes	Yes	Yes	Yes	Yes	
Clear event & fault records	Yes	Yes	Yes	Yes	Yes	
Time synchronization		Yes	Yes	Yes	Yes	Yes
Control commands	Yes	Yes	Yes	Yes	Yes	Yes

Table 2 - Measurement information and relay settings

3 MENU STRUCTURE

The relay's menu is arranged in a table. Each setting in the menu is referred to as a cell, and each cell in the menu may be accessed using a row and column address. The settings are arranged so that each column contains related settings, for example all the disturbance recorder settings are contained within the same column. As shown in the following diagram, the top row of each column contains the heading that describes the settings contained within that column. Movement between the columns of the menu can only be made at the column heading level.

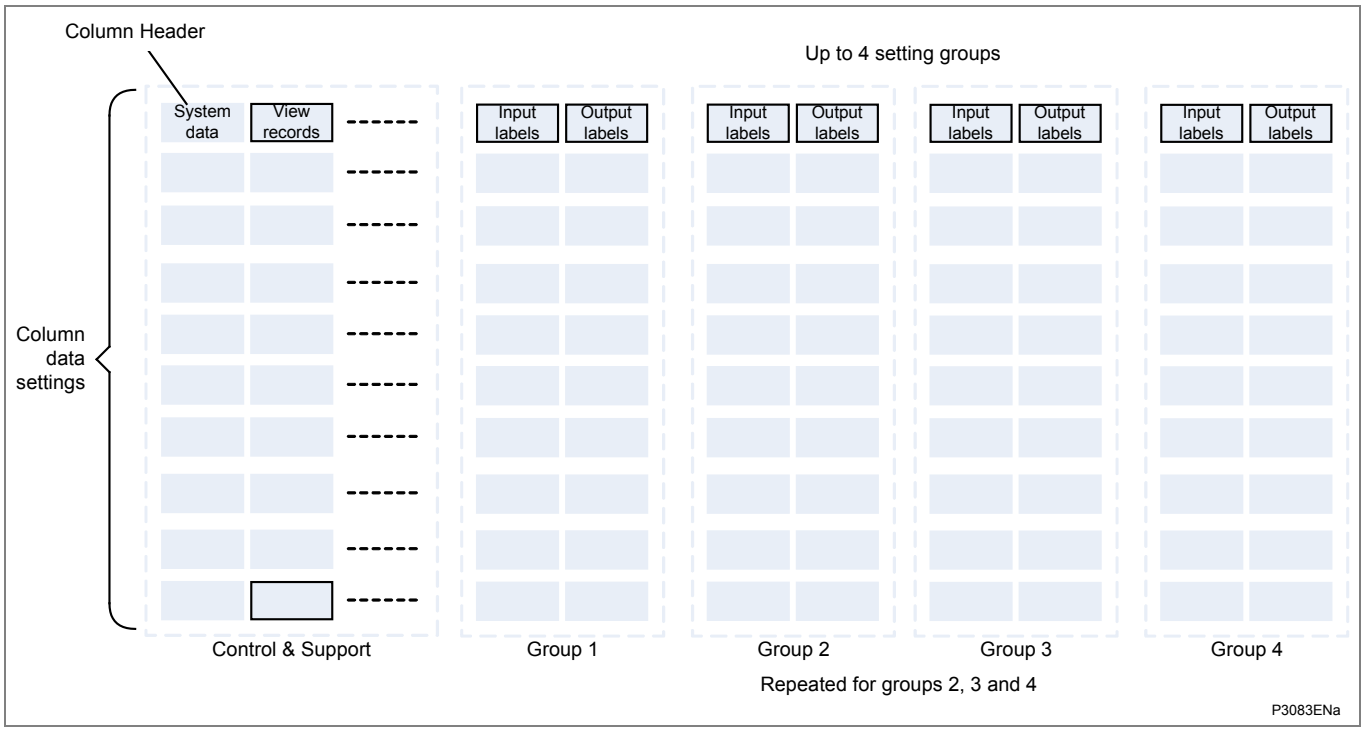

Figure 3 - Menu structure

The settings in the menu fall into one of these categories:

- Protection Settings
- Disturbance Recorder settings
- Control and Support (C&S) settings.

Different methods are used to change a setting depending on which category the setting falls into.

- C&S settings are stored and used by the relay immediately after they are entered.
- For either protection settings or disturbance recorder settings, the relay stores the new setting values in a temporary 'scratchpad'. It activates all the new settings together, but only after it has been confirmed that the new settings are to be adopted. This technique is employed to provide extra security, and so that several setting changes that are made within a group of protection settings will all take effect at the same time.

3.1 Protection Settings

The settings include the following items:

- Input and Output element settings
- Scheme logic settings

There are four groups of settings, with each group containing the same setting cells. One group of settings is selected as the active group, and is used by the configuration elements.

3.2 Disturbance Recorder Settings

The Disturbance Recorder (DR) settings include the record duration and trigger position, selection of analogue and digital signals to record, and the signal sources that trigger the recording.

3.3 Control and Support Settings

The control and support settings include:

- Configuration settings
- Active setting group
- Password & language settings
- Communications settings
- Event & maintenance record settings
- User interface settings
- Commissioning settings

4 PASSWORD PROTECTION

The menu structure contains four levels of access. The level of access that is enabled determines which of the settings can be changed and is controlled by entry of two different passwords. The levels of access are summarised in the *Access Levels (with Cyber Security features)* table.

4.1 Cyber Security Settings

A detailed description of Schneider Electric Cyber Security features is provided in the *Cyber Security* chapter.

Important	**We would strongly recommend that you understand the contents of the Cyber Security chapter before you use any cyber security features or make any changes to the settings.**

Each MiCOM P40 IED includes a large number of possible settings. These settings are very important in determining how the device works.

A detailed description of the settings is given in the *Cyber Security* chapter.

4.2 Products with Cyber Security Features

For products with cyber security features, the menu structure contains four levels of access, three of which are password-protected. These are summarized below:

Level	Meaning	Read Operation	Write Operation
0	Read Some Write Minimal	SYSTEM DATA column: Description Plant Reference Model Number Serial Number S/W Ref. Access Level Security Feature SECURITY CONFIG column: User Banner Attempts Remain Blk Time Remain Fallback PW level Security Code (UI only)	Password Entry LCD Contrast (UI only)
1	Read All Write Few	All data and settings are readable. Poll Measurements	All items writeable at level 0. Level 1 Password setting Select Event, Main and Fault (upload) Extract Events (e.g. via MiCOM S1 Studio)
2	Read All Write Some	All data and settings are readable. Poll Measurements	All items writeable at level 1. Setting Cells that change visibility (Visible/Invisible). Setting Values (Primary/Secondary) selector Commands: Reset Indication Reset Demand Reset Statistics Reset CB Data / counters Level 2 Password setting
3	Read All Write All	All data and settings are readable. Poll Measurements	All items writeable at level 2. Change all Setting cells Operations: Extract and download Setting file. Extract and download PSL Extract and download MCL61850 (IED Config - IEC61850) Extraction of Disturbance Recorder Courier/Modbus Accept Event (auto event extraction, e.g. via A2R) Commands: Change Active Group setting Close / Open CB Change Comms device address. Set Date & Time Switch MCL banks / Switch Conf. Bank in UI (IED Config - IEC61850) Enable / Disable Device ports (in SECURITY CONFIG column) Level 3 password setting

Table 3 - Access levels (with cyber security features)

4.3 Password Management

Level management, including password description, management and recovery, is fully described in the *Cyber Security* chapter.

Each of the Password may be any length between 0 and 8 characters long which can contain any ASCII character in the range ASCII code 33 (21 Hex) to ASCII code 122 (7A Hex) inclusive. The factory default passwords are blank for Level 1 and AAAA for Levels 2 and 3. Each password is user-changeable once it has been correctly entered. Entry of the password is achieved either by a prompt when a setting change is attempted, or by moving to the ‘Password’ cell in the ‘System data’ column of the menu. The level of access is independently enabled for each interface, that is to say if level 2 access is enabled for the rear communication port, the front panel access will remain at level 0 unless the relevant password is entered at the front panel. The access level enabled by the password entry will time-out independently for each interface after a period of inactivity and revert to the default level. If the passwords are lost an emergency password can be supplied - contact Schneider Electric with the relay’s serial number and security code (relays with Cyber Security features). The current level of access enabled for an interface can be determined by examining the 'Access level' cell in the 'System data' column, the access level for the front panel User Interface (UI), can also be found as one of the default display options.

5 RELAY CONFIGURATION

The relay is a multi-function device that supports numerous different protection, control and communication features. To simplify the setting of the relay, there is a configuration settings column which can be used to enable or disable many of the functions of the relay. The settings associated with any function that is disabled are made invisible, i.e. they are not shown in the menu. To disable a function change the relevant cell in the '**Configuration'** column from '**Enabled'** to '**Disabled'**.

The configuration column controls which of the protection settings groups is selected as active through the '**Active settings**' cell. A protection setting group can also be disabled in the configuration column, provided it is not the present active group. Similarly, a disabled setting group cannot be set as the active group.

The column also allows all of the setting values in one group of protection settings to be copied to another group.

To do this firstly set the 'Copy from' cell to the protection setting group to be copied, then set the 'Copy to' cell to the protection group where the copy is to be placed. The copied settings are initially placed in the temporary scratchpad, and will only be used by the relay following confirmation.

To restore the default values to the settings in any protection settings group, set the 'Restore defaults' cell to the relevant group number. Alternatively it is possible to set the 'Restore defaults' cell to 'All settings' to restore the default values to all of the relay's settings, not just the protection groups' settings. The default settings will initially be placed in the scratchpad and will only be used by the relay after they have been confirmed. Note that restoring defaults to all settings includes the rear communication port settings, which may result in communication via the rear port being disrupted if the new (default) settings do not match those of the master station.

6 FRONT PANEL USER INTERFACE (KEYPAD AND LCD)

When the keypad is exposed it provides full access to the menu options of the relay, with the information displayed on the LCD.

The ⟨, ⟩, ⌃ and ⌄ keys which are used for menu navigation and setting value changes include an auto-repeat function that comes into operation if any of these keys are held continually pressed. This can speed up both setting value changes and menu navigation; the longer the key is held depressed, the faster the rate of change or movement becomes.

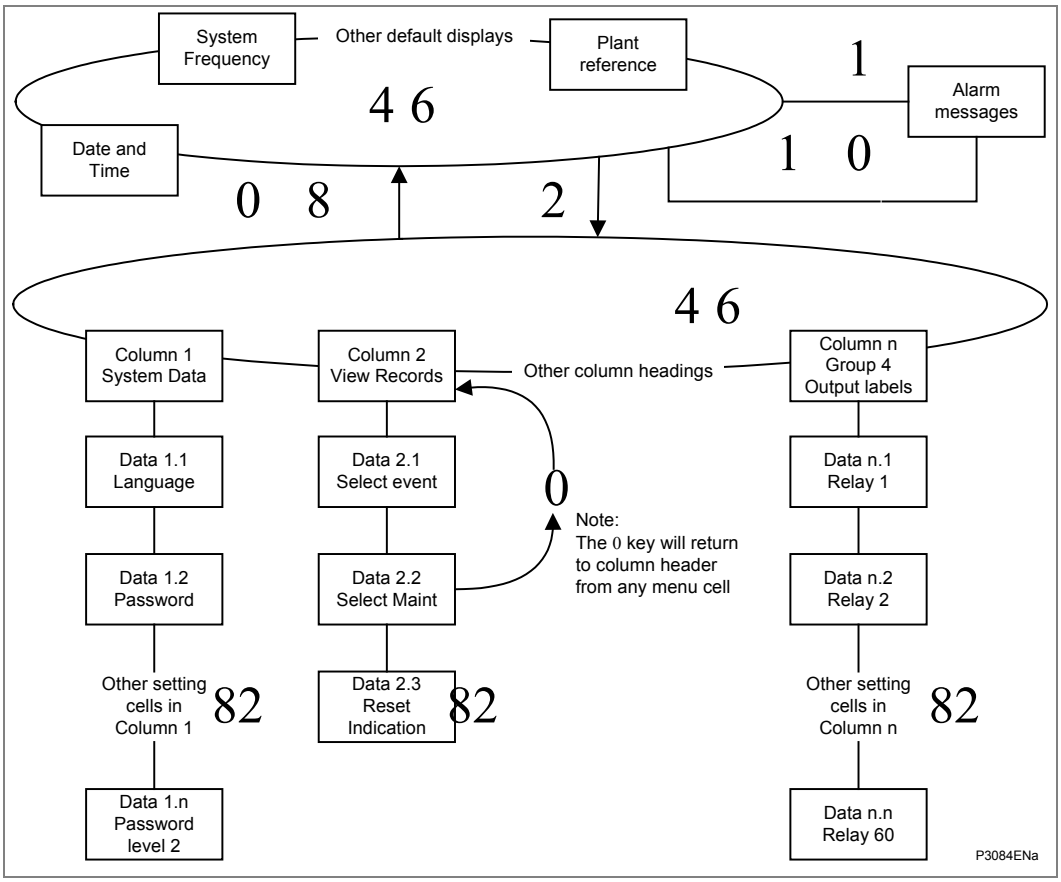

Figure 4 - Front panel user interface

6.1 Default Display and Menu Time-Out

The front panel menu has a default display. To change the default display selection requires password level 3 and the following items can be selected by using the ⟨ and ⟩ keys:

- User Banner
- Date and time
- Relay description (user defined)
- Plant reference (user defined)
- System frequency
- 3-phase voltage
- 3-phase and neutral current
- Power
- Access permissions

If the user has got level 3 (or enters a level 3 password when prompted as above), then the IED will then inform the user that to move to another default display will make the IED non-NERC compliant, as follows:

```
DISPLAY NOT-NERC
COMPLIANT. OK?
```

'Enter' will move the default display to the next one, 'Cancel' will leave the display at the user banner display. The confirmation for non-NERC compliance will only be asked when moving off the user banner display. The request for level 3 password will always be asked for any change to the default display selection if the current level is not already 3.

Whenever the relay has an uncleared alarm (such as fault record, protection alarm, or control alarm) the default display is replaced by the following display.

```
Alarms/Faults
Present
```

Enter the menu structure of the relay from the default display, even if the display shows the **Alarms/Faults present** message.

6.2 Navigating Menus and Browsing Settings

Use the four arrow keys to browse the menu, following the menu structure shown above.

1. Starting at the default display, press the ⌄ key to show the first column heading.
2. Use the ⟨ and ⟩ keys to select the required column heading.
3. Use the ⌄ and ⌃ keys to view the setting data in the column.
4. To return to the column header, either hold the ⌃ key down or press the clear key (c) once. It is only possible to move across columns at the column heading level.
5. To return to the default display, press the ⌃ key or the clear key (c) from any of the column headings. If you use the auto-repeat function of the ⌃ key, you cannot go straight to the default display from one of the column cells because the auto-repeat stops at the column heading.
6. Press the ⌃ key again to go to the default display.

6.3 Navigating the Hotkey Menu

To access the hotkey menu from the default display:

1. Press the key directly below the **HOTKEY** text on the LCD.
2. Once in the hotkey menu, use the ⟨ and ⟩ keys to scroll between the available options, then use the hotkeys to control the function currently displayed.
   If neither the ⟨ or ⟩ keys are pressed within 20 seconds of entering a hotkey sub menu, the relay reverts to the default display.
3. Press the clear key (c) to return to the default menu from any page of the hotkey menu.

The layout of a typical page of the hotkey menu is as follows:

- The top line shows the contents of the previous and next cells for easy menu navigation
- The center line shows the function
- The bottom line shows the options assigned to the direct access keys

The functions available in the hotkey menu are listed in the following sections.

6.3.1 Setting Group Selection

The user can either scroll using <<NXT GRP>> through the available setting groups or <<SELECT>> the setting group that is currently displayed.

When the SELECT button is pressed a screen confirming the current setting group is displayed for 2 seconds before the user is prompted with the <<NXT GRP>> or <<SELECT>> options again. The user can exit the sub menu by using the left and right arrow keys.

For more information on setting group selection refer to “Setting group selection” section in the Operation chapter.

6.3.2 Control Inputs - User Assignable Functions

The number of control inputs (user assignable functions – USR ASS) represented in the hotkey menu is user configurable in the “CTRL I/P CONFIG” column. The chosen inputs can be SET/RESET using the hotkey menu.

For more information refer to the “Control Inputs” section in the Operation chapter.

6.3.3 CB Control

The CB control functionality varies from one Px40 relay to another. For a detailed description of the CB control via the hotkey menu refer to the “Circuit Breaker Control” section of the Setting chapter.

6.3.4 Hotkey Menu Navigation

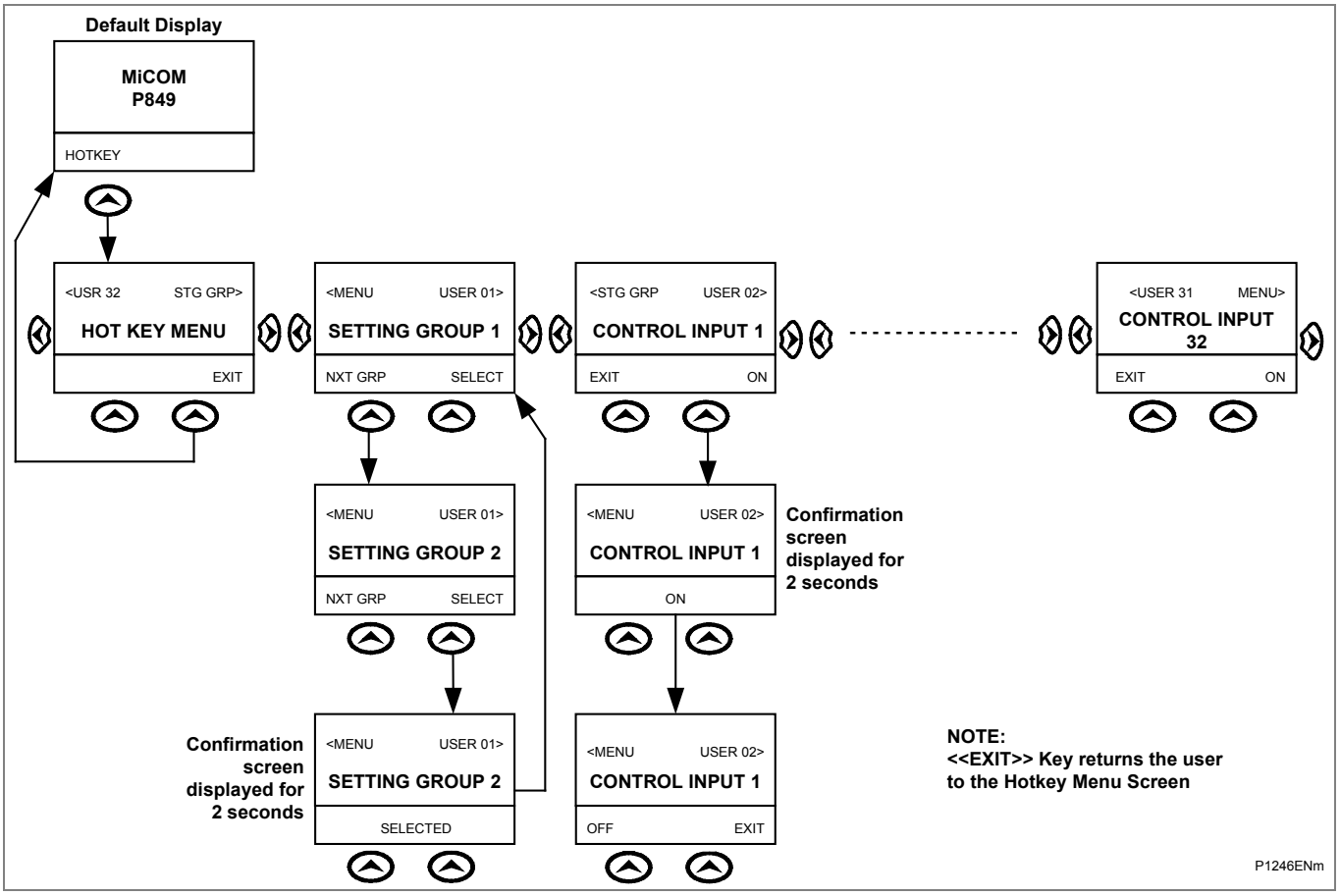

Figure 5 - Hotkey menu navigation

6.4 Password Entry

The password entry method varies slightly depending on whether the product includes cyber security features or not.

6.4.1 Password Entry including Cyber Security

1. When a password is required to edit a setting, this prompt appears.

```
Enter Password
```

2. A flashing cursor shows which character field of the password can be changed. Press the ⌃ and ⌄ keys as needed.
3. Use the ‹ and › keys to move between the character fields of the password. Press the enter key ↵ to confirm the password.
   If an incorrect password is entered, the display shows an error message folowed by the Enter UI Pwd prompt again.
   Otherwise, a message then appears indicating that the password is correct and what access has been unlocked. If this is sufficient to edit the selected setting, the display returns to the setting page to allow the edit to continue.
4. To escape from this prompt press the clear key C. Alternatively, enter the password using **System data** > **Password**.
   If the keypad is inactive for 15 minutes, the password protection of the front panel user interface reverts to the default access permissions.
5. To manually reset the password protection to the default permissions, select **System data** > **Password**, then press the clear key instead of entering a password.

6.5 Reading and Clearing of Alarm Messages and Fault Records

One or more alarm messages appear on the default display and the yellow alarm LED flashes. The alarm messages can either be self-resetting or latched, in which case they must be cleared manually.

1. To view the alarm messages, press the read key 📖. When all alarms have been viewed but not cleared, the alarm LED change from flashing to constantly ON and the latest fault record appears (if there is one).
2. Scroll through the pages of the latest fault record, using the 📖 key. When all pages of the fault record have been viewed, the following prompt appears.

```
Press clear to
reset alarms
```

3. To clear all alarm messages, press C. To return to the display showing alarms or faults present, and leave the alarms uncleared, press 📖.
4. Depending on the password configuration settings, you may need to enter a password before the alarm messages can be cleared. See the ***How to Access the IED/Relay*** section.
5. When all alarms are cleared, the yellow alarm LED switches OFF; also the red trip LED switches OFF if it was switched ON after a trip.
6. To speed up the procedure, enter the alarm viewer using the 📖 key, then press the C key. This goes straight to the fault record display. Press C again to move straight to the alarm reset prompt, then press C again to clear all alarms.

6.6 Setting Changes

1. To change the value of a setting, go to the relevant cell in the menu, then press the enter key ⏎ to change the cell value. A flashing cursor on the LCD shows the value can be changed. If a password is required to edit the cell value, a password prompt appears.
2. To change the setting value, press the ⌄ or ⌃ keys. If the setting to be changed is a binary value or a text string, select the required bit or character to be changed using the ‹ and › keys.
3. Press ⏎ to confirm the new setting value or the clear key ⓒ to discard it. The new setting is automatically discarded if it is not confirmed in 15 seconds.
4. For protection group settings and disturbance recorder settings, the changes must be confirmed before they are used by the relay.
5. To do this, when all required changes have been entered, return to the column heading level and press the ⌄ key. Before returning to the default display, the following prompt appears.

```
Update settings?
Enter or clear
```

6. Press ⏎ to accept the new settings or press ⓒ to discard the new settings.

Note	*If the menu time-out occurs before the setting changes have been confirmed, the setting values are also discarded.*

Control and support settings are updated immediately after they are entered, without the **Update settings?** prompt.

6.7 How to Logout (at the Front Panel)

If you have been configuring the IED, you should 'log out'. You do this by going up to the top of the menu tree. When you are at the Column Heading level and you press the Up button, you may be prompted to log out with the following display:

```
ENTER TO LOG OUT
CLEAR TO CANCEL
```

You will only be asked this question if your password level is higher than the fallback level.

If you confirm, the following message is displayed for 2 seconds:

```
LOGGED OUT
Access Level <x>
```

Where x is the current fallback level.

If you decide not to log out (i.e. you cancel), the following message is displayed for 2 seconds.

```
LOGOUT CANCELLED
Access Level <x>
```

Where x is the current access level.

7 FRONT COMMUNICATION PORT USER INTERFACE

The front communication port is provided by a 9-pin female D-type connector located under the bottom hinged cover. It provides EIA(RS)232 serial data communication and is intended for use with a PC locally to the relay (up to 15m distance) as shown in the following diagram. This port supports the Courier communication protocol only. Courier is the communication language developed by Schneider Electric to allow communication with its range of protection relays. The front port is particularly designed for use with the relay settings program MiCOM S1 Studio (Windows 2000, Windows XP or Windows Vista based software package).

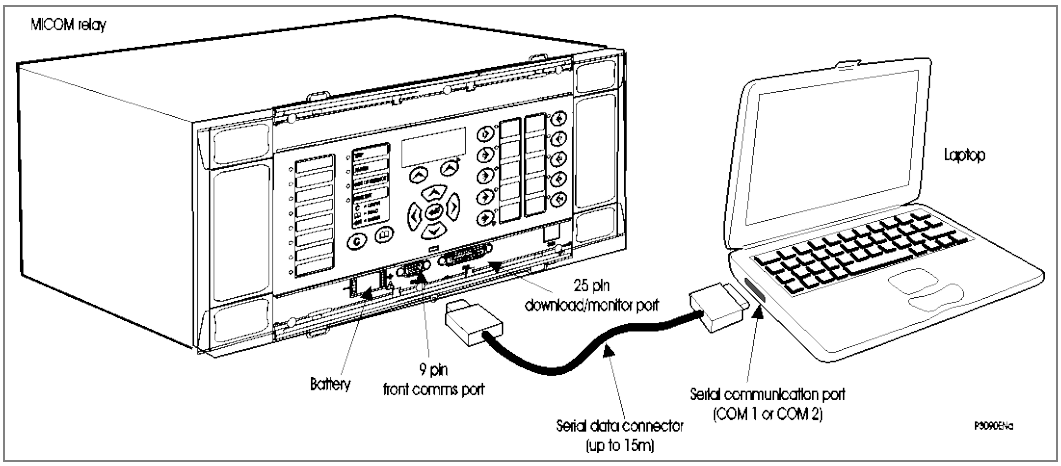

Figure 6 - Front port connection

The IED is a Data Communication Equipment (DCE) device. The pin connections of the 9-pin front port are as follows:

Pin no.	Description
2	Tx Transmit data
3	Rx Receive data
5	0V Zero volts common

Table 4 - Front port DCE pin connections

None of the other pins are connected in the relay. The relay should be connected to the serial port of a PC, usually called COM1 or COM2. PCs are normally Data Terminal Equipment (DTE) devices which have a serial port pin connection as below (if in doubt check your PC manual):

Pin	25 Way	9 Way	Description
Pin no. 2	3	2	Rx Receive data
Pin no. 3	2	3	Tx Transmit data
Pin no. 5	7	5	0V Zero volts common

Table 5 - DTE devices serial port pin connections

For successful data communication, the Tx pin on the relay must be connected to the Rx pin on the PC, and the Rx pin on the relay must be connected to the Tx pin on the PC, as shown in the diagram. Therefore, providing that the PC is a DTE with pin connections as given above, a 'straight through' serial connector is required, i.e. one that connects pin 2 to pin 2, pin 3 to pin 3, and pin 5 to pin 5.

Note	*A common cause of difficulty with serial data communication is connecting Tx to Tx and Rx to Rx. This could happen if a 'cross-over' serial connector is used, i.e. one that connects pin 2 to pin 3, and pin 3 to pin 2, or if the PC has the same pin configuration as the relay.*

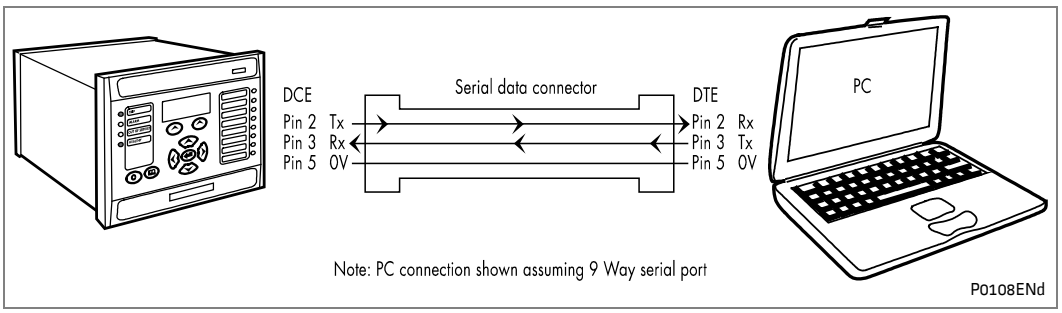

Figure 7 - PC relay signal connection

Having made the physical connection from the relay to the PC, the PCs communication settings must be configured to match those of the relay. The relays communication settings for the front port are fixed as shown below:

Protocol	Baud rate	Courier address	Message format
Courier	19,200 bits/s	1	11 bit - 1 start bit, 8 data bits, 1 parity bit (even parity), 1 stop bit

Table 6 - Relay front port settings

The inactivity timer for the front port is set at 15 minutes. This controls how long the relay will maintain its password access on the front port. If no messages are received on the front port for 15 minutes then any password access that has been enabled will be revoked.

7.1 Front Courier Port

The front EIA(RS)232 9-pin port supports the Courier protocol for one to one communication.

Note	*The front port is actually compliant to EIA(RS)574; the 9-pin version of EIA(RS)232, see www.tiaonline.org.*

The front port is designed for use during installation and commissioning/maintenance and is not suitable for permanent connection. Since this interface will not be used to link the relay to a substation communication system, some of the features of Courier are not implemented. These are as follows:

- Automatic Extraction of Event Records:
  - Courier Status byte does not support the Event flag
  - Send Event/Accept Event commands are not implemented
- Automatic Extraction of Disturbance Records:
  - Courier Status byte does not support the Disturbance flag
- Busy Response Layer: Courier Status byte does not support the Busy flag, the only response to a request will be the final data
- Fixed Address: The address of the front courier port is always 1, the Change Device address command is not supported.
- Fixed Baud Rate: 19200 bps

Note	*Although automatic extraction of event and disturbance records is not supported, this data can be manually accessed using the front port.*

8 MICOM S1 STUDIO RELAY COMMUNICATIONS BASICS

The EIA(RS)232 front communication port is particularly designed for use with the relay settings program MiCOM S1 Studio. MiCOM S1 Studio is the universal MiCOM IED Support Software and provide users a direct and convenient access to all stored data in any MiCOM IED using the EIA(RS)232 front communication port.

MiCOM S1 Studio provides full access to MiCOM Px10, Px20, Px30, Px40, Modulex series, K series, L series relays and MiCOM Mx20 measurements units

The MiCOM S1 Studio product is updated periodically. These updates provide support for new features (such as allowing you to manage new MiCOM products, as well as using new software releases and hardware suffixes). The updates may also include fixes. **Accordingly, we strongly advise customers to use the latest Schneider Electric version of MiCOM S1 Studio.**

8.1 PC Requirements

The minimum and recommended hardware requirements for MiCOM S1 Studio Suite (v5.1.0) are shown below. These include the S1 Studio application and other tools which are included: UPCT, P746 RHMI, P740 Topology Tool:

Minimum requirements:				
Platform	**Processor**	**RAM**	**HDD1**	**HDD2**
Windows XP x86	1 GHz	512 MB	900 MB	1,5 GB
Windows 7 x86	1 GHz	1 GB	900 MB	1,9 GB
Windows 7 x64	1 GHz	2 GB	900 MB	2,1 GB
Windows Server 2008 x86 Sp1	1 GHz	512 MB	900 MB	1,7 GB

Recommended requirements:				
Platform	**Processor**	**RAM**	**HDD1**	**HDD2**
Windows XP x86	1 GHz	1 GB	900 MB	1,5 GB
Windows 7 x86	1 GHz	2 GB	900 MB	1,9 GB
Windows 7 x64	1 GHz	4 GB	900 MB	2,1 GB
Windows Server 2008 x86 Sp1	1 GHz	4 GB	900 MB	1,7 GB

Note 1 *OS with Windows Updates updated on 2015/05.*

Note 2 *OS without Windows Updates installed.*

Both configurations do not include Data Models HDD requirements.
Screen resolution for minimum requirements: Super VGA (800 x 600).
Screen resolution for recommended requirements: XGA (1024x768) and higher.
MiCOM S1 Studio must be started with Administrator privileges.

MiCOM S1 Studio Additional components

The following components are required to run MiCOM S1 Studio and are installed by its installation package.

Component Type	Component
Package	.NET Framework 2.0 SP 1 (x64)
Package	.NET Framework 2.0 SP 1 (x86)
Package	.NET Framework 4.0 Client (x64)
Package	.NET Framework 4.0 Client (x86)
Package	Visual C++ 2005 SP1 Redistributable Package (x86)
Package	Visual C++ 2008 SP1 Redistributable Package (x86)
Merge modules	DAO 3.50
Merge modules	MFC 6.0
Merge modules	MFC Unicode 6.0
Merge modules	Microsoft C Runtime Library 6.0
Merge modules	Microsoft C++ Runtime Library 6.0
Merge modules	Microsoft Component Category Manager Library
Merge modules	Microsoft Data Access Components 2.8 (English)
Merge modules	Microsoft Jet Database Engine 3.51 (English)
Merge modules	Microsoft OLE 2.40 for Windows NT and Windows 95
Merge modules	Microsoft Visual Basic Virtual Machine 6.0
Merge modules	MSXML 4.0 - Windows 9x and later
Merge modules	MSXML 4.0 - Windows XP and later
Merge modules	Visual C++ 8.0 MFC (x86) WinSXS MSM
Merge modules	Visual C++ 8.0 MFC.Policy (x86) WinSXS MSM

8.2 Connecting to the Relay using MiCOM S1 Studio

This section is a quick start guide to using MiCOM S1 Studio and assumes this is installed on your PC. See the MiCOM S1 Studio program online help for more detailed information.

1. Make sure the EIA(RS)232 serial cable is properly connected between the port on the front panel of the relay and the PC.
2. To start MiCOM S1 Studio, select **Programs** > **Schneider Electric** > **MiCOM S1 Studio** > **MiCOM S1 Studio**.
3. Click the **Quick Connect** tab and select **Create a New System**.
4. Check the **Path to System file** is correct, then enter the name of the system in the **Name** field. To add a description of the system, use the **Comment** field.
5. Click **OK**.
6. Select the device type.
7. Select the communications port, and open a connection with the device.
8. Once connected, select the language for the settings file, the device name, then click **Finish**. The configuration is updated.
9. In the **Studio Explorer** window, select **Device** > **Supervise Device**… to control the relay directly.

8.3 Off-Line Use of MiCOM S1 Studio

MiCOM S1 Studio can also be used as an off-line tool to prepare settings, without access to the relay.

1. If creating a new system, in the Studio Explorer, select **create new** system. Then right-click the new system and select **New substation**.
2. Right-click the new substation and select **New voltage level**.
3. Then right-click the new voltage level and select **New bay**.
4. Then right-click the new bay and select **New device**.

   You can add a device at any level, whether it is a system, substation, voltage or bay.
5. Select a device type from the list, then enter the relay type. Click **Next**.
6. Enter the full model number and click **Next**.
7. Select the **Language** and **Model**, then click **Next**.
8. If the IEC61850 protocol is selected, and an Ethernet board with hardware option Q, R or S is selected, select IEC 61850 Edition:
   IEC 61850 Edition 2 Mode or
   IEC 61850 Edition 1 Compatible Mode.
9. Enter a unique device name, then click **Finish**.
10. Right-click the **Settings** folder and select **New File**. A default file **000** is added.
11. Right-click file **000** and select click **Open**. You can then edit the settings. See the MiCOM S1 Studio program online help for more information.

SETTINGS

CHAPTER 4

Date:	08/2015
Products covered by this chapter:	This chapter covers the specific versions of the MiCOM products listed below. This includes ***only*** the following combinations of Software Version and Hardware Suffix.
Hardware Suffix:	M
Software Version:	B0
Connection Diagrams:	10P849xx (xx = 01 to 06)

CONTENTS

Notes:

1 INTRODUCTION

The relay must be configured to the system and the application by means of appropriate settings.

The sequence in which the settings are listed and described in this chapter will be the control and configuration settings and the disturbance recorder settings.

The relay is supplied with a factory-set configuration of default settings.

2 RELAY SETTINGS

The IED is a multi-function device that supports numerous different control and communication features. The settings associated with any function that is disabled are made invisible; i.e. they are not shown in the menu. To disable a function change the relevant cell in the '**Configuration'** column from '**Enabled'** to '**Disabled'**.

To simplify the setting of the IED, there is a configuration settings column, used to enable or disable many of the IED functions. The aim of the configuration column is to allow general configuration from a single point in the menu.

The configuration column controls which of the four settings groups is selected as active through the '**Active settings**' cell. A setting group can also be disabled in the configuration column, provided it is not the present active group. Similarly, a disabled setting group cannot be set as the active group.

The column also allows all of the setting values in one group of settings to be copied to another group.

To do this firstly set the '**Copy from**' cell to the setting group to be copied, then set the '**Copy to**' cell to the group where the copy is to be placed. The copied settings are initially placed in the temporary scratchpad, and will only be used by the IED following confirmation.

2.1 Default Settings Restore

To restore the default values to the settings in any protection settings group, set the 'restore defaults' cell to the relevant group number. Alternatively it is possible to set the 'restore defaults' cell to 'all settings' to restore the default values to all of the IEDs settings, not just the protection groups' settings. The default settings will initially be placed in the scratchpad and will only be used by the IED after they have been confirmed.

Note	*Restoring defaults to all settings includes the rear communication port settings, which may result in communication via the rear port being disrupted if the new (default) settings do not match those of the master station.*

3 CONFIGURATION MENU

Col	Row	Menu Text	Default Setting	Available Setting
Description				
9	00	CONFIGURATION		
9	01	Restore Defaults	No Operation	No Operation, All Settings, Setting Group 1, Setting Group 2, Setting Group 3 or Setting Group 4
Setting to restore a setting group to factory default settings				
9	02	Setting Group	Select via Menu	Select via Menu or Select via Optos
Allows setting group changes to be initiated via Opto Input or via Menu.				
9	03	Active Settings	Group 1	Group 1, Group 2, Group 3, Group 4
Selects the active setting group.				
9	04	Save Changes	No Operation	No Operation, Save, Abort
Saves all relay settings.				
9	05	Copy From	Group 1	Group 1, 2, 3 or 4
Allows displayed settings to be copied from a selected setting group.				
9	06	Copy To	No Operation	No Operation, Group 1, 2, 3 or 4
Allows displayed settings to be copied to a selected setting group (ready to paste).				
9	07	Setting Group 1	Enabled	Enabled or Disabled
If the setting group is disabled from the configuration, then all associated settings and signals are hidden, with the exception of this setting (paste).				
9	08	Setting Group 2	Disabled	Disabled or Enabled
If the setting group is disabled from the configuration, then all associated settings and signals are hidden, with the exception of this setting (paste).				
9	09	Setting Group 3	Disabled	Disabled or Enabled
If the setting group is disabled from the configuration, then all associated settings and signals are hidden, with the exception of this setting (paste).				
9	0A	Setting Group 4	Disabled	Disabled or Enabled
If the setting group is disabled from the configuration, then all associated settings and signals are hidden, with the exception of this setting (paste).				
9	25	Input Labels	Visible	Visible or Invisible
Sets the Input Labels menu visible further on in the settings menu.				
9	26	Output Labels	Visible	Visible or Invisible
Sets the Output Labels menu visible further on in the settings menu.				
9	29	Record Control	Invisible	Invisible or Visible
Sets the Record Control menu visible further on in the settings menu.				
9	2A	Disturb Recorder	Invisible	Invisible or Visible
Sets the “Disturbance recorder” menu (formerly called the "Precise events recorder") visible further on in the settings menu.				
9	2B	Measure't Setup	Invisible	Invisible or Visible
Sets the Measurement Setup menu visible further on in the settings menu.				
9	2C	Comms Settings	Visible	Visible or Invisible
Sets the Communications Settings menu visible further on in the settings menu. These are the settings associated with the 1st and 2nd rear communications ports.				
9	2D	Commission Tests	Visible	Visible or Invisible
Sets the Commissioning Tests menu visible further on in the settings menu.				

Col	Row	Menu Text	Default Setting	Available Setting
Description				
9	2F	Control Inputs	Visible	Visible or Invisible
Activates the Control Input status and operation menu further on in the setting menu.				
9	35	Ctrl I/P Config	Visible	Visible or Invisible
Sets the Control Input Configuration menu visible further on in the setting menu.				
9	36	Ctrl I/P Labels	Visible	Visible or Invisible
Sets the Control Input Labels menu visible further on in the setting menu.				
9	39	Direct Access	Enabled	Enabled/Disabled/Hotkey
Defines what CB control direct access is allowed. Enabled implies control via menu, hotkeys etc.				
9	40	InterMiCOM	Disabled	Disabled or Enabled
To enable (activate) or disable (turn off) EIA (RS) 232 InterMiCOM (integrated teleprotection). InterMiCOM - ZN0025 required in slot A				
9	50	Function Key	Visible	Visible or Invisible
Sets the Function Key menu visible further on in the setting menu.				
9	FB	RP1 Read Only	Disabled	Disabled or Enabled
Enable Remote Read Only Mode on RP1 courier or IEC60870-5-103 communication protocol.				
9	FC	RP2 Read Only	Disabled	Disabled or Enabled
Enable Remote Read Only Mode on RP2 courier communication protocol.				
9	FD	NIC Read Only	Disabled	Disabled or Enabled
Enable Remote Read Only Mode on the Network Interface card (IEC 61850 tunneled courier).				
9	FF	LCD Contrast	11	0 to 31 step 1
Sets the LCD contrast.				

4 GROUPED PROTECTION SETTINGS

4.1 Input Labels

The column **GROUP x INPUT LABELS** is used to individually label each opto input that is available in the relay. The text is restricted to 16 characters and is available if 'Input Labels' are set visible under CONFIGURATION column.

The "Input Labels" column is visible when the "Input Labels" setting ("Configuration" column) = "visible".

Col	Row	Menu Text	Default Setting	Available Setting
Description				
4A	00	INPUT LABELS		
4A	01	Opto Input 1	Input L1	16-character text
Setting to change the text associated with each individual opto-isolated input. This text will be displayed in the programmable scheme logic and event record description of the opto- isolated input.				
4A	02	Opto Input 2	Input L2	16-character text
Setting to change the text associated with each individual opto-isolated input. This text will be displayed in the programmable scheme logic and event record description of the opto- isolated input.				
4A	03	Opto Input 3	Input L3	16-character text
Setting to change the text associated with each individual opto-isolated input. This text will be displayed in the programmable scheme logic and event record description of the opto- isolated input.				
4A	04	Opto Input 4	Input L4	16-character text
Setting to change the text associated with each individual opto-isolated input. This text will be displayed in the programmable scheme logic and event record description of the opto- isolated input.				
4A	05	Opto Input 5	Input L5	16-character text
Setting to change the text associated with each individual opto-isolated input. This text will be displayed in the programmable scheme logic and event record description of the opto- isolated input.				
4A	06	Opto Input 6	Input L6	16-character text
Setting to change the text associated with each individual opto-isolated input. This text will be displayed in the programmable scheme logic and event record description of the opto- isolated input.				
4A	07	Opto Input 7	Input L7	16-character text
Setting to change the text associated with each individual opto-isolated input. This text will be displayed in the programmable scheme logic and event record description of the opto- isolated input.				
4A	08	Opto Input 8	Input L8	16-character text
Setting to change the text associated with each individual opto-isolated input. This text will be displayed in the programmable scheme logic and event record description of the opto- isolated input.				
4A	09	Opto Input 9	Input L9	16-character text
Setting to change the text associated with each individual opto-isolated input. This text will be displayed in the programmable scheme logic and event record description of the opto- isolated input.				
4A	0A	Opto Input 10	Input L10	16-character text
Setting to change the text associated with each individual opto-isolated input. This text will be displayed in the programmable scheme logic and event record description of the opto- isolated input.				
4A	0B	Opto Input 11	Input L11	16-character text
Setting to change the text associated with each individual opto-isolated input. This text will be displayed in the programmable scheme logic and event record description of the opto- isolated input.				
4A	0C	Opto Input 12	Input L12	16-character text

Col	Row	Menu Text	Default Setting	Available Setting
Description				
Setting to change the text associated with each individual opto-isolated input. This text will be displayed in the programmable scheme logic and event record description of the opto- isolated input.				
4A	0D	Opto Input 13	Input L13	16-character text
Setting to change the text associated with each individual opto-isolated input. This text will be displayed in the programmable scheme logic and event record description of the opto- isolated input.				
4A	0E	Opto Input 14	Input L14	16-character text
Setting to change the text associated with each individual opto-isolated input. This text will be displayed in the programmable scheme logic and event record description of the opto- isolated input.				
4A	0F	Opto Input 15	Input L15	16-character text
Setting to change the text associated with each individual opto-isolated input. This text will be displayed in the programmable scheme logic and event record description of the opto- isolated input.				
4A	10	Opto Input 16	Input L16	16-character text
Setting to change the text associated with each individual opto-isolated input. This text will be displayed in the programmable scheme logic and event record description of the opto- isolated input.				
4A	11	Opto Input 17	Input L17	16-character text
Setting to change the text associated with each individual opto-isolated input. This text will be displayed in the programmable scheme logic and event record description of the opto- isolated input.				
4A	12	Opto Input 18	Input L18	16-character text
Setting to change the text associated with each individual opto-isolated input. This text will be displayed in the programmable scheme logic and event record description of the opto- isolated input.				
4A	13	Opto Input 19	Input L19	16-character text
Setting to change the text associated with each individual opto-isolated input. This text will be displayed in the programmable scheme logic and event record description of the opto- isolated input.				
4A	14	Opto Input 20	Input L20	16-character text
Setting to change the text associated with each individual opto-isolated input. This text will be displayed in the programmable scheme logic and event record description of the opto- isolated input.				
4A	15	Opto Input 21	Input L21	16-character text
Setting to change the text associated with each individual opto-isolated input. This text will be displayed in the programmable scheme logic and event record description of the opto- isolated input.				
4A	16	Opto Input 22	Input L22	16-character text
Setting to change the text associated with each individual opto-isolated input. This text will be displayed in the programmable scheme logic and event record description of the opto- isolated input.				
4A	17	Opto Input 23	Input L23	16-character text
Setting to change the text associated with each individual opto-isolated input. This text will be displayed in the programmable scheme logic and event record description of the opto- isolated input.				
4A	18	Opto Input 24	Input L24	16-character text
Setting to change the text associated with each individual opto-isolated input. This text will be displayed in the programmable scheme logic and event record description of the opto- isolated input.				
4A	19	Opto Input 25	Input L25	16-character text
Setting to change the text associated with each individual opto-isolated input. This text will be displayed in the programmable scheme logic and event record description of the opto- isolated input.				
4A	1A	Opto Input 26	Input L26	16-character text
Setting to change the text associated with each individual opto-isolated input. This text will be displayed in the programmable scheme logic and event record description of the opto- isolated input.				
4A	1B	Opto Input 27	Input L27	16-character text
Setting to change the text associated with each individual opto-isolated input. This text will be displayed in the programmable scheme logic and event record description of the opto- isolated input.				
4A	1C	Opto Input 28	Input L28	16-character text

Col	Row	Menu Text	Default Setting	Available Setting
Description				
Setting to change the text associated with each individual opto-isolated input. This text will be displayed in the programmable scheme logic and event record description of the opto- isolated input.				
4A	1D	Opto Input 29	Input L29	16-character text
Setting to change the text associated with each individual opto-isolated input. This text will be displayed in the programmable scheme logic and event record description of the opto- isolated input.				
4A	1E	Opto Input 30	Input L30	16-character text
Setting to change the text associated with each individual opto-isolated input. This text will be displayed in the programmable scheme logic and event record description of the opto- isolated input.				
4A	1F	Opto Input 31	Input L31	16-character text
Setting to change the text associated with each individual opto-isolated input. This text will be displayed in the programmable scheme logic and event record description of the opto- isolated input.				
4A	20	Opto Input 32	Input L32	16-character text
Setting to change the text associated with each individual opto-isolated input. This text will be displayed in the programmable scheme logic and event record description of the opto- isolated input.				
4A	21	Opto Input 33	Input L33	16-character text
Setting to change the text associated with each individual opto-isolated input. This text will be displayed in the programmable scheme logic and event record description of the opto- isolated input.				
4A	22	Opto Input 34	Input L34	16-character text
Setting to change the text associated with each individual opto-isolated input. This text will be displayed in the programmable scheme logic and event record description of the opto- isolated input.				
4A	23	Opto Input 35	Input L35	16-character text
Setting to change the text associated with each individual opto-isolated input. This text will be displayed in the programmable scheme logic and event record description of the opto- isolated input.				
4A	24	Opto Input 36	Input L36	16-character text
Setting to change the text associated with each individual opto-isolated input. This text will be displayed in the programmable scheme logic and event record description of the opto- isolated input.				
4A	25	Opto Input 37	Input L37	16-character text
Setting to change the text associated with each individual opto-isolated input. This text will be displayed in the programmable scheme logic and event record description of the opto- isolated input.				
4A	26	Opto Input 38	Input L38	16-character text
Setting to change the text associated with each individual opto-isolated input. This text will be displayed in the programmable scheme logic and event record description of the opto- isolated input.				
4A	27	Opto Input 39	Input L39	16-character text
Setting to change the text associated with each individual opto-isolated input. This text will be displayed in the programmable scheme logic and event record description of the opto- isolated input.				
4A	28	Opto Input 40	Input L40	16-character text
Setting to change the text associated with each individual opto-isolated input. This text will be displayed in the programmable scheme logic and event record description of the opto- isolated input.				
4A	29	Opto Input 41	Input L41	16-character text
Setting to change the text associated with each individual opto-isolated input. This text will be displayed in the programmable scheme logic and event record description of the opto- isolated input.				
4A	2A	Opto Input 42	Input L42	16-character text
Setting to change the text associated with each individual opto-isolated input. This text will be displayed in the programmable scheme logic and event record description of the opto- isolated input.				
4A	2B	Opto Input 43	Input L43	16-character text
Setting to change the text associated with each individual opto-isolated input. This text will be displayed in the programmable scheme logic and event record description of the opto- isolated input.				
4A	2C	Opto Input 44	Input L44	16-character text

Col	Row	Menu Text	Default Setting	Available Setting
Description				
Setting to change the text associated with each individual opto-isolated input. This text will be displayed in the programmable scheme logic and event record description of the opto- isolated input.				
4A	2D	Opto Input 45	Input L45	16-character text
Setting to change the text associated with each individual opto-isolated input. This text will be displayed in the programmable scheme logic and event record description of the opto- isolated input.				
4A	2E	Opto Input 46	Input L46	16-character text
Setting to change the text associated with each individual opto-isolated input. This text will be displayed in the programmable scheme logic and event record description of the opto- isolated input.				
4A	2F	Opto Input 47	Input L47	16-character text
Setting to change the text associated with each individual opto-isolated input. This text will be displayed in the programmable scheme logic and event record description of the opto- isolated input.				
4A	30	Opto Input 48	Input L48	16-character text
Setting to change the text associated with each individual opto-isolated input. This text will be displayed in the programmable scheme logic and event record description of the opto- isolated input.				
4A	31	Opto Input 49	Input L49	16-character text
Setting to change the text associated with each individual opto-isolated input. This text will be displayed in the programmable scheme logic and event record description of the opto- isolated input.				
4A	32	Opto Input 50	Input L50	16-character text
Setting to change the text associated with each individual opto-isolated input. This text will be displayed in the programmable scheme logic and event record description of the opto- isolated input.				
4A	33	Opto Input 51	Input L51	16-character text
Setting to change the text associated with each individual opto-isolated input. This text will be displayed in the programmable scheme logic and event record description of the opto- isolated input.				
4A	34	Opto Input 52	Input L52	16-character text
Setting to change the text associated with each individual opto-isolated input. This text will be displayed in the programmable scheme logic and event record description of the opto- isolated input.				
4A	35	Opto Input 53	Input L53	16-character text
Setting to change the text associated with each individual opto-isolated input. This text will be displayed in the programmable scheme logic and event record description of the opto- isolated input.				
4A	36	Opto Input 54	Input L54	16-character text
Setting to change the text associated with each individual opto-isolated input. This text will be displayed in the programmable scheme logic and event record description of the opto- isolated input.				
4A	37	Opto Input 55	Input L55	16-character text
Setting to change the text associated with each individual opto-isolated input. This text will be displayed in the programmable scheme logic and event record description of the opto- isolated input.				
4A	38	Opto Input 56	Input L56	16-character text
Setting to change the text associated with each individual opto-isolated input. This text will be displayed in the programmable scheme logic and event record description of the opto- isolated input.				
4A	39	Opto Input 57	Input L57	16-character text
Setting to change the text associated with each individual opto-isolated input. This text will be displayed in the programmable scheme logic and event record description of the opto- isolated input.				
4A	3A	Opto Input 58	Input L58	16-character text
Setting to change the text associated with each individual opto-isolated input. This text will be displayed in the programmable scheme logic and event record description of the opto- isolated input.				
4A	3B	Opto Input 59	Input L59	16-character text
Setting to change the text associated with each individual opto-isolated input. This text will be displayed in the programmable scheme logic and event record description of the opto- isolated input.				
4A	3C	Opto Input 60	Input L60	16-character text

Col	Row	Menu Text	Default Setting	Available Setting
Description				
Setting to change the text associated with each individual opto-isolated input. This text will be displayed in the programmable scheme logic and event record description of the opto- isolated input.				
4A	3D	Opto Input 61	Input L61	16-character text
Setting to change the text associated with each individual opto-isolated input. This text will be displayed in the programmable scheme logic and event record description of the opto- isolated input.				
4A	3E	Opto Input 62	Input L62	16-character text
Setting to change the text associated with each individual opto-isolated input. This text will be displayed in the programmable scheme logic and event record description of the opto- isolated input.				
4A	3F	Opto Input 63	Input L63	16-character text
Setting to change the text associated with each individual opto-isolated input. This text will be displayed in the programmable scheme logic and event record description of the opto- isolated input.				
4A	40	Opto Input 64	Input L64	16-character text
Setting to change the text associated with each individual opto-isolated input. This text will be displayed in the programmable scheme logic and event record description of the opto- isolated input.				

4.2 Output Labels

The column **GROUP x OUTPUT LABELS** is used to individually label each output relay that is available in the relay. The text is restricted to 16 characters and is available if 'Output Labels' are set visible under CONFIGURATION column.

The "Output Labels" column is visible when the "Output Labels" setting ("Configuration" column) = "visible".

Col	Row	Menu Text	Default Setting	Available Setting
Description				
4B	00	OUTPUT LABELS		
4B	01	Relay 1	Output R1	16-character text
Setting to change the text associated with each individual control input. This text will be displayed in the programmable scheme logic and event record description of the device output contact.				
4B	02	Relay 2	Output R2	16-character text
Setting to change the text associated with each individual control input. This text will be displayed in the programmable scheme logic and event record description of the device output contact.				
4B	03	Relay 3	Output R3	16-character text
Setting to change the text associated with each individual control input. This text will be displayed in the programmable scheme logic and event record description of the device output contact.				
4B	04	Relay 4	Output R4	16-character text
Setting to change the text associated with each individual control input. This text will be displayed in the programmable scheme logic and event record description of the device output contact.				
4B	05	Relay 5	Output R5	16-character text
Setting to change the text associated with each individual control input. This text will be displayed in the programmable scheme logic and event record description of the device output contact.				
4B	06	Relay 6	Output R6	16-character text
Setting to change the text associated with each individual control input. This text will be displayed in the programmable scheme logic and event record description of the device output contact.				
4B	07	Relay 7	Output R7	16-character text

Col	Row	Menu Text	Default Setting	Available Setting
Description				
Setting to change the text associated with each individual control input. This text will be displayed in the programmable scheme logic and event record description of the device output contact.				
4B	08	Relay 8	Output R8	16-character text
Setting to change the text associated with each individual control input. This text will be displayed in the programmable scheme logic and event record description of the device output contact.				
4B	09	Relay 9	Output R9	16-character text
Setting to change the text associated with each individual control input. This text will be displayed in the programmable scheme logic and event record description of the device output contact.				
4B	0A	Relay 10	Output R10	16-character text
Setting to change the text associated with each individual control input. This text will be displayed in the programmable scheme logic and event record description of the device output contact.				
4B	0B	Relay 11	Output R11	16-character text
Setting to change the text associated with each individual control input. This text will be displayed in the programmable scheme logic and event record description of the device output contact.				
4B	0C	Relay 12	Output R12	16-character text
Setting to change the text associated with each individual control input. This text will be displayed in the programmable scheme logic and event record description of the device output contact.				
4B	0D	Relay 13	Output R13	16-character text
Setting to change the text associated with each individual control input. This text will be displayed in the programmable scheme logic and event record description of the device output contact.				
4B	0E	Relay 14	Output R14	16-character text
Setting to change the text associated with each individual control input. This text will be displayed in the programmable scheme logic and event record description of the device output contact.				
4B	0F	Relay 15	Output R15	16-character text
Setting to change the text associated with each individual control input. This text will be displayed in the programmable scheme logic and event record description of the device output contact.				
4B	10	Relay 16	Output R16	16-character text
Setting to change the text associated with each individual control input. This text will be displayed in the programmable scheme logic and event record description of the device output contact.				
4B	11	Relay 17	Output R17	16-character text
Setting to change the text associated with each individual control input. This text will be displayed in the programmable scheme logic and event record description of the device output contact.				
4B	12	Relay 18	Output R18	16-character text
Setting to change the text associated with each individual control input. This text will be displayed in the programmable scheme logic and event record description of the device output contact.				
4B	13	Relay 19	Output R19	16-character text
Setting to change the text associated with each individual control input. This text will be displayed in the programmable scheme logic and event record description of the device output contact.				
4B	14	Relay 20	Output R20	16-character text
Setting to change the text associated with each individual control input. This text will be displayed in the programmable scheme logic and event record description of the device output contact.				
4B	15	Relay 21	Output R21	16-character text
Setting to change the text associated with each individual control input. This text will be displayed in the programmable scheme logic and event record description of the device output contact.				
4B	16	Relay 22	Output R22	16-character text
Setting to change the text associated with each individual control input. This text will be displayed in the programmable scheme logic and event record description of the device output contact.				
4B	17	Relay 23	Output R23	16-character text

Col	Row	Menu Text	Default Setting	Available Setting
Description				
Setting to change the text associated with each individual control input. This text will be displayed in the programmable scheme logic and event record description of the device output contact.				
4B	18	Relay 24	Output R24	16-character text
Setting to change the text associated with each individual control input. This text will be displayed in the programmable scheme logic and event record description of the device output contact.				
4B	19	Relay 25	Output R25	16-character text
Setting to change the text associated with each individual control input. This text will be displayed in the programmable scheme logic and event record description of the device output contact.				
4B	1A	Relay 26	Output R26	16-character text
Setting to change the text associated with each individual control input. This text will be displayed in the programmable scheme logic and event record description of the device output contact.				
4B	1B	Relay 27	Output R27	16-character text
Setting to change the text associated with each individual control input. This text will be displayed in the programmable scheme logic and event record description of the device output contact.				
4B	1C	Relay 28	Output R28	16-character text
Setting to change the text associated with each individual control input. This text will be displayed in the programmable scheme logic and event record description of the device output contact.				
4B	1D	Relay 29	Output R29	16-character text
Setting to change the text associated with each individual control input. This text will be displayed in the programmable scheme logic and event record description of the device output contact.				
4B	1E	Relay 30	Output R30	16-character text
Setting to change the text associated with each individual control input. This text will be displayed in the programmable scheme logic and event record description of the device output contact.				
4B	1F	Relay 31	Output R31	16-character text
Setting to change the text associated with each individual control input. This text will be displayed in the programmable scheme logic and event record description of the device output contact.				
4B	20	Relay 32	Output R32	16-character text
Setting to change the text associated with each individual control input. This text will be displayed in the programmable scheme logic and event record description of the device output contact.				
4B	21	Relay 33	Output R33	16-character text
Setting to change the text associated with each individual control input. This text will be displayed in the programmable scheme logic and event record description of the device output contact.				
4B	22	Relay 34	Output R34	16-character text
Setting to change the text associated with each individual control input. This text will be displayed in the programmable scheme logic and event record description of the device output contact.				
4B	23	Relay 35	Output R35	16-character text
Setting to change the text associated with each individual control input. This text will be displayed in the programmable scheme logic and event record description of the device output contact.				
4B	24	Relay 36	Output R36	16-character text
Setting to change the text associated with each individual control input. This text will be displayed in the programmable scheme logic and event record description of the device output contact.				
4B	25	Relay 37	Output R37	16-character text
Setting to change the text associated with each individual control input. This text will be displayed in the programmable scheme logic and event record description of the device output contact.				
4B	26	Relay 38	Output R38	16-character text
Setting to change the text associated with each individual control input. This text will be displayed in the programmable scheme logic and event record description of the device output contact.				
4B	27	Relay 39	Output R39	16-character text

Col	Row	Menu Text	Default Setting	Available Setting
Description				
Setting to change the text associated with each individual control input. This text will be displayed in the programmable scheme logic and event record description of the device output contact.				
4B	28	Relay 40	Output R40	16-character text
Setting to change the text associated with each individual control input. This text will be displayed in the programmable scheme logic and event record description of the device output contact.				
4B	29	Relay 41	Output R41	16-character text
Setting to change the text associated with each individual control input. This text will be displayed in the programmable scheme logic and event record description of the device output contact.				
4B	2A	Relay 42	Output R42	16-character text
Setting to change the text associated with each individual control input. This text will be displayed in the programmable scheme logic and event record description of the device output contact.				
4B	2B	Relay 43	Output R43	16-character text
Setting to change the text associated with each individual control input. This text will be displayed in the programmable scheme logic and event record description of the device output contact.				
4B	2C	Relay 44	Output R44	16-character text
Setting to change the text associated with each individual control input. This text will be displayed in the programmable scheme logic and event record description of the device output contact.				
4B	2D	Relay 45	Output R45	16-character text
Setting to change the text associated with each individual control input. This text will be displayed in the programmable scheme logic and event record description of the device output contact.				
4B	2E	Relay 46	Output R46	16-character text
Setting to change the text associated with each individual control input. This text will be displayed in the programmable scheme logic and event record description of the device output contact.				
4B	2F	Relay 47	Output R47	16-character text
Setting to change the text associated with each individual control input. This text will be displayed in the programmable scheme logic and event record description of the device output contact.				
4B	30	Relay 48	Output R48	16-character text
Setting to change the text associated with each individual control input. This text will be displayed in the programmable scheme logic and event record description of the device output contact.				
4B	31	Relay 49	Output R49	16-character text
Setting to change the text associated with each individual control input. This text will be displayed in the programmable scheme logic and event record description of the device output contact.				
4B	32	Relay 50	Output R50	16-character text
Setting to change the text associated with each individual control input. This text will be displayed in the programmable scheme logic and event record description of the device output contact.				
4B	33	Relay 51	Output R51	16-character text
Setting to change the text associated with each individual control input. This text will be displayed in the programmable scheme logic and event record description of the device output contact.				
4B	34	Relay 52	Output R52	16-character text
Setting to change the text associated with each individual control input. This text will be displayed in the programmable scheme logic and event record description of the device output contact.				
4B	35	Relay 53	Output R53	16-character text
Setting to change the text associated with each individual control input. This text will be displayed in the programmable scheme logic and event record description of the device output contact.				
4B	36	Relay 54	Output R54	16-character text
Setting to change the text associated with each individual control input. This text will be displayed in the programmable scheme logic and event record description of the device output contact.				
4B	37	Relay 55	Output R55	16-character text

Col	Row	Menu Text	Default Setting	Available Setting
Description				
Setting to change the text associated with each individual control input. This text will be displayed in the programmable scheme logic and event record description of the device output contact.				
4B	38	Relay 56	Output R56	16-character text
Setting to change the text associated with each individual control input. This text will be displayed in the programmable scheme logic and event record description of the device output contact.				
4B	39	Relay 57	Output R57	16-character text
Setting to change the text associated with each individual control input. This text will be displayed in the programmable scheme logic and event record description of the device output contact.				
4B	3A	Relay 58	Output R58	16-character text
Setting to change the text associated with each individual control input. This text will be displayed in the programmable scheme logic and event record description of the device output contact.				
4B	3B	Relay 59	Output R59	16-character text
Setting to change the text associated with each individual control input. This text will be displayed in the programmable scheme logic and event record description of the device output contact.				
4B	3C	Relay 60	Output R60	16-character text
Setting to change the text associated with each individual control input. This text will be displayed in the programmable scheme logic and event record description of the device output contact.				

5 CONTROL AND SUPPORT SETTINGS

The control and support settings are part of the main menu and are used to configure the global configuration for the relay. It includes submenu settings as shown here:

- Function configuration settings
- Reset LEDs
- Active setting group
- Password & language settings
- Communications settings
- Record settings
- User interface settings
- Commissioning settings

5.1 System Data

This menu provides information for the device and general status of the device.

Col	Row	Menu Text	Default Setting	Available Setting
Description				
0	00	SYSTEM DATA		
0	01	Language	English	English, French, German, Russian or Spanish
The default language used by the device. Selectable as English, French, German, Russian or Spanish				
0	01	Language	English	English, French, German, Russian, Spanish or Chinese
The default language used by the device. Selectable as English, French, German, Russian, Spanish or Chinese.				
0	02	Password	AAAA	33 to 122 step 1
Default device password.				
0	03	Sys Fn Links	0	
Setting to allow the fixed function trip LED to be self-resetting.				
0	04	Description	MiCOM P849	32 to 234 step 1
16-character device description. This can be edited.				
0	05	Plant Reference	MiCOM	32 to 234 step 1
Associated plant description and can be edited.				
0	06	Model Number	Model Number	P849??????????M
Device model number. This display can not be edited.				
0	08	Serial Number	Serial Number	6 digits + 1 letter
Device Serial Number. This display can not be edited.				
0	09	Frequency	50 Hz	50 Hz to 60 Hz step 10 Hz
Relay set frequency. Settable between 50 and 60Hz.				
0	0A	Comms Level	2	Data
Displays the conformance of the device to the Courier Level 2 comms.				
0	0B	Relay Address	255	0 to 255 step 1
This is the first rear port relay address. Note that the maximum number varies, depends on the protocol used. 255 is the maximum for Courier.				
0	0B	Relay Address	1	1 to 247 step 1

Col	Row	Menu Text	Default Setting	Available Setting
Description				
This is the first rear port relay address. Note that the maximum number varies, depends on the protocol used. 247 is the maximum for MODBUS.				
0	0B	Relay Address	1	0 to 254 step 1
This is the first rear port relay address. Note that the maximum number varies, depends on the protocol used. 254 is the maximum for IEC60870-5-103.				
0	0B	Relay Address	1	0 to 65534 step 1
This is the first rear port relay address. Note that the maximum number varies, depends on the protocol used. 65534 is the maximum for DNP3.0.				
0	0C	Plant Status		Data
0	0D	Control Status		Data
0	0E	Active Group	1	Data
This setting displays the active settings group.				
0	11	Software Ref. 1		Data
This displays the device software version - including the protocol and device model.				
0	12	Software Ref. 2		Data
This displays the device software version - including the protocol and device model. Applies to IEC61850 / UCA2 / DNP3oe builds only.				
0	15	IEC61850 Edition	Edition 2	Edition 1 or Edition 2
Set the IEC61850 version (edition 1 or edition 2)				
0	16	ETH COMM Mode	Dual IP	Dual IP, PRP, HSR
Set the FPGA type.				
0	30	Opto I/P Status	00000000000000000000000000000000	Data
Duplicate. This displays the status of opto-isolated inputs (L1 to L16 or L32)				
0	31	Opto I/P Status2	00000000	Data
Duplicate. This displays the status of opto inputs (L33 to L48 or L64)				
0	40	Relay O/P Status	00000000	Data
Duplicate. Displays the status of the output relays (number of output relays depending on the model).				
0	41	Relay O/P Status2	00000000	Data
Duplicate. Displays the status of the output relays (number of output relays depending on the model).				
0	50	Alarm Status 1	00000000000000000000000000000000	Data
This is a 32-bit field which gives the status of the first 32 alarms.				
0	51	Alarm Status 2	00000000000000000000000000000000	Data
Next 32 alarm status defined.				
0	52	Alarm Status 3	00000000000000000000000000000000	Data
Next 32 alarm status defined. Assigned specifically for platform alarms.				
0	D0	Access Level		Data
Displays the current access level (see the Getting Started chapter P849/EN GS for level description and access): – Level 0 (No password required) = Read access to all settings, alarms, event records records – Level 1(Password 1 or 2 required) = As level 0 plus: Control commands, e.g. circuit breaker open/close + Reset of alarm conditions + Reset LEDs, Clearing of event and – Level 2 (Password 2 required) = as level 1 plus all other settings				
0	D2	Password Level 1	AAAA	8 spaces
Allows user to change password level 1.				
0	D3	Password Level 2	AAAA	AAAA

Col	Row	Menu Text	Default Setting	Available Setting
Description				
Allows user to change password level 2.				
0	D4	Password Level 3	AAAA	AAAA
Allows user to change password level 3.				
0	DF	Security Feature		Data
0	E1	Password		8 characters
Entered Encrypted Password				
0	E2	Password Level 1	AAAA	
Allows user to change password level 1.				
0	E3	Password Level 2	AAAA	
Allows user to change password level 2.				
0	E4	Password Level 3	AAAA	
Allows user to change password level 3.				

5.2 Date and Time

Displays the date and time as well as the battery condition.

Col	Row	Menu Text	Default Setting	Available Setting
Description				
8	00	DATE AND TIME		
8	01	Date/Time		
8	02	Date		
Displays the devices current date (on the front panel)				
8	03	Time		
Displays the devices current time (on the front panel)				
8	04	IRIG-B Sync	Disabled	Disabled or Enabled
This enables IRIG-B time synchronization (with IRIG-B option)				
8	05	IRIG-B Status		Card Not Fitted or Card Failed or Signal Healthy or No Signal
Displays the status of IRIG-B (with IRIG-B option)				
8	06	Battery Status		Battery Healthy or not status
Displays whether the battery is healthy or not.				
8	07	Battery Alarm	Enabled	Enabled or Disabled
This setting determines whether an unhealthy device battery condition ir alarmed or not.				
8	13	SNTP Status		Disabled, Trying Server 1, Trying Server 2, Server 1 OK, Server 2 OK, No response, No valid clock.
For Ethernet option only: Displays information about the SNTP time synchronization status				
8	20	LocalTime Enable	Disabled	Disabled, Fixed or Flexible.

Col	Row	Menu Text	Default Setting	Available Setting
Description				
Setting to turn on/off local time adjustments. Disabled - No local time zone will be maintained. Time synchronization from any interface will be used to directly set the master clock and all displayed (or read) times on all interfaces will be based on the master clock with no adjustment. Fixed - A local time zone adjustment can be defined using the LocalTime offset setting and all interfaces will use local time except SNTP time synchronization and IEC61850 timestamps. Flexible - A local time zone adjustment can be defined using the LocalTime offset setting and each interface can be assigned to the UTC zone or local time zone with the exception of the local interfaces which will always be in the local time zone and IEC61850/SNTP which will always be in the UTC zone.				
8	21	LocalTime Offset	0 mins	-720 mins to 720 mins step 15 mins
Setting to specify an offset of -12 to +12 hrs in 15 minute intervals for local time zone. This adjustment is applied to the time based on the master clock which is UTC/GMT				
8	22	DST Enable	Enabled	Enabled or Disabled
Setting to turn on/off daylight saving time adjustment to local time.				
8	23	DST Offset	60 mins	30 mins to 60 mins step 30 mins
Setting to specify daylight saving offset which will be used for the time adjustment to local time.				
8	24	DST Start	Last	First, Second, Third, Fourth, Last
Setting to specify the week of the month in which daylight saving time adjustment starts				
8	25	DST Start Day	Sunday	Monday, Tuesday, Wednesday, Thursday, Friday, Saturday, Sunday
Setting to specify the day of the week in which daylight saving time adjustment starts				
8	26	DST Start Month	March	January, February, March, April, May, June, July, August, September, October, November, December
Setting to specify the month in which daylight saving time adjustment starts				
8	27	DST Start Mins	60 mins	0 mins to 1425 mins step 15 mins
Setting to specify the time of day in which daylight saving time adjustment starts. This is set relative to 00:00 hrs on the selected day when time adjustment is to start.				
8	28	DST End	Last	First, Second, Third, Fourth, Last
Setting to specify the week of the month in which daylight saving time adjustment ends.				
8	29	DST End Day	Sunday	Monday, Tuesday, Wednesday, Thursday, Friday, Saturday, Sunday
Setting to specify the day of the week in which daylight saving time adjustment ends				
8	2A	DST End Month	October	January, February, March, April, May, June, July, August, September, October, November, December
Setting to specify the month in which daylight saving time adjustment ends				
8	2B	DST End Mins	60 mins	0 mins to 1425 mins step 15 mins
Setting to specify the time of day in which daylight saving time adjustment ends. This is set relative to 00:00 hrs on the selected day when time adjustment is to end.				
8	30	RP1 Time Zone	Local	UTC or Local
Setting for the rear port 1 interface to specify if time synchronization received will be local or universal time coordinated				
8	31	RP2 Time Zone	Local	UTC or Local
Setting for the rear port 2 interface to specify if time synchronization received will be local or universal time coordinated				
8	32	DNPOE Time Zone	Local	UTC or Local
Setting for the DNP3.0 Over Ethernet interface to specify if time synchronization received will be local or universal time coordinated				
8	33	Tunnel Time Zone	Local	UTC or Local

Col	Row	Menu Text	Default Setting	Available Setting
Description				
With Ethernet option only: Setting to specify if time synchronisation received will be local or universal time co-ordinate when 'tunnelling' courier protocol over Ethernet.				

5.3 Record Control

It is possible to disable the reporting of events from all interfaces that support setting changes. The settings that control the various types of events are in the Record Control column. The effect of setting each to disabled is as follows:

Col	Row	Menu Text	Default Setting	Available Setting
Description				
0B	00	RECORD CONTROL		
0B	04	Alarm Event	Enabled	Enabled or Disabled
Disabling this setting means that all the occurrences that produce an alarm will result in no event being generated.				
0B	05	Relay O/P Event	Enabled	Enabled or Disabled
Disabling this setting means that no event will be generated for any change in logic input state.				
0B	06	Opto Input Event	Enabled	Enabled or Disabled
Disabling this setting means that no event will be generated for any change in logic input state.				
0B	07	General Event	Enabled	Enabled or Disabled
Disabling this setting means that no General Events will be generated				
0B	09	Maint Rec Event	Enabled	Enabled or Disabled
Disabling this setting means that no event will be generated for any occurrence that produces a maintenance record.				
0B	0A	Protection Event	Enabled	Enabled or Disabled
Disabling this setting means that no event will be generated for any occurrence that produces a Protection record.				
0B	40	DDB 31 - 0	0xFFFFFFFF	11111111111111111111111111111111
This displays the status of the signals DDB 31 - 0				
0B	41	DDB 63 - 32	0xFFFFFFFF	11111111111111111111111111111111
This displays the status of the signals DDB 63 - 32				
0B	42	DDB 95 - 64	0xFFFFFFFF	11111111111111111111111111111111
This displays the status of the signals DDB 95 - 64				
0B	43	DDB 127 - 96	0xFFFFFFFF	11111111111111111111111111111111
This displays the status of the signals DDB 127 - 96				
0B	44	DDB 159 - 128	0xFFFFFFFF	11111111111111111111111111111111
This displays the status of the signals DDB 159 - 128				
0B	45	DDB 191 - 160	0xFFFFFFFF	11111111111111111111111111111111
This displays the status of the signals DDB 191 - 160				
0B	46	DDB 223 - 192	0xFFFFFFFF	11111111111111111111111111111111
This displays the status of the signals DDB 223 - 192				
0B	47	DDB 255 - 224	0xFFFFFFFF	11111111111111111111111111111111
This displays the status of the signals DDB 255 - 224				
0B	48	DDB 287 - 256	0xFFFFFFFF	11111111111111111111111111111111

Col	Row	Menu Text	Default Setting	Available Setting
Description				
This displays the status of the signals DDB 287 - 256				
0B	49	DDB 319 - 288	0xFFFFFFFF	11111111111111111111111111111111
This displays the status of the signals DDB 319 - 288				
0B	4A	DDB 351 - 320	0xFFFFFFFF	11111111111111111111111111111111
This displays the status of the signals DDB 351 - 320				
0B	4B	DDB 383 - 352	0xFFFFFFFF	11111111111111111111111111111111
This displays the status of the signals DDB 383 - 352				
0B	4C	DDB 415 - 384	0xFFFFFFFF	11111111111111111111111111111111
This displays the status of the signals DDB 415 - 384				
0B	4D	DDB 447 - 416	0xFFFFFFFF	11111111111111111111111111111111
This displays the status of the signals DDB 447 - 416				
0B	4E	DDB 479 - 448	0xFFFFFFFF	11111111111111111111111111111111
This displays the status of the signals DDB 479 - 448				
0B	4F	DDB 511 - 480	0xFFFFFFFF	11111111111111111111111111111111
This displays the status of the signals DDB 511 - 480				
0B	50	DDB 543 - 512	0xFFFFFFFF	11111111111111111111111111111111
This displays the status of the signals DDB 543 - 512				
0B	51	DDB 575 - 544	0xFFFFFFFF	11111111111111111111111111111111
This displays the status of the signals DDB 575 - 544				
0B	52	DDB 607 - 576	0xFFFFFFFF	11111111111111111111111111111111
This displays the status of the signals DDB 607 - 576				
0B	53	DDB 639 - 608	0xFFFFFFFF	11111111111111111111111111111111
This displays the status of the signals DDB 639 - 608				
0B	54	DDB 671 - 640	0xFFFFFFFF	11111111111111111111111111111111
This displays the status of the signals DDB 671 - 640				
0B	55	DDB 703 - 672	0xFFFFFFFF	11111111111111111111111111111111
This displays the status of the signals DDB 703 - 672				
0B	56	DDB 735 - 704	0xFFFFFFFF	11111111111111111111111111111111
This displays the status of the signals DDB 735 - 704				
0B	57	DDB 767 - 736	0xFFFFFFFF	11111111111111111111111111111111
This displays the status of the signals DDB 767 - 736				
0B	58	DDB 799 - 768	0xFFFFFFFF	11111111111111111111111111111111
This displays the status of the signals DDB 799 - 768				
0B	59	DDB 831 - 800	0xFFFFFFFF	11111111111111111111111111111111
This displays the status of the signals DDB 831 - 800				
0B	5A	DDB 863 - 832	0xFFFFFFFF	11111111111111111111111111111111
This displays the status of the signals DDB 863 - 832				
0B	5B	DDB 895 - 864	0xFFFFFFFF	11111111111111111111111111111111
This displays the status of the signals DDB 895 - 864				
0B	5C	DDB 927 - 896	0xFFFFFFFF	11111111111111111111111111111111
This displays the status of the signals DDB 927 - 896				
0B	5D	DDB 959 - 928	0xFFFFFFFF	11111111111111111111111111111111
This displays the status of the signals DDB 959 - 928				

Col	Row	Menu Text	Default Setting	Available Setting
Description				
0B	5E	DDB 991 - 960	0xFFFFFFFF	11111111111111111111111111111111
This displays the status of the signals DDB 991 - 960				
0B	5F	DDB 1023 - 992	0xFFFFFFFF	11111111111111111111111111111111
This displays the status of the signals DDB 1023 - 992				
0B	60	DDB 1055 - 1024	0xFFFFFFFF	11111111111111111111111111111111
This displays the status of the signals DDB 1055 - 1024				
0B	61	DDB 1087 - 1056	0xFFFFFFFF	11111111111111111111111111111111
This displays the status of the signals DDB 1087 - 1056				
0B	62	DDB 1119 - 1088	0xFFFFFFFF	11111111111111111111111111111111
This displays the status of the signals DDB 1119 - 1088				
0B	63	DDB 1151 - 1120	0xFFFFFFFF	11111111111111111111111111111111
This displays the status of the signals DDB 1151 - 1120				
0B	64	DDB 1183 - 1152	0xFFFFFFFF	11111111111111111111111111111111
This displays the status of the signals DDB 1183 - 1152				
0B	65	DDB 1215 - 1184	0xFFFFFFFF	11111111111111111111111111111111
This displays the status of the signals DDB 1215 - 1184				
0B	66	DDB 1247 - 1216	0xFFFFFFFF	11111111111111111111111111111111
This displays the status of the signals DDB 1247 - 1216				
0B	67	DDB 1279 - 1248	0xFFFFFFFF	11111111111111111111111111111111
This displays the status of the signals DDB 1279 - 1248				
0B	68	DDB 1311 - 1280	0xFFFFFFFF	11111111111111111111111111111111
This displays the status of the signals DDB 1311 - 1280				
0B	69	DDB 1343 - 1312	0xFFFFFFFF	11111111111111111111111111111111
This displays the status of the signals DDB 1343 - 1312				
0B	6A	DDB 1375 - 1344	0xFFFFFFFF	11111111111111111111111111111111
This displays the status of the signals DDB 1375 - 1344				
0B	6B	DDB 1407 - 1376	0xFFFFFFFF	11111111111111111111111111111111
This displays the status of the signals DDB 1407 - 1376				
0B	6C	DDB 1439 - 1408	0xFFFFFFFF	11111111111111111111111111111111
This displays the status of the signals DDB 1439 - 1408				
0B	6D	DDB 1471 - 1440	0xFFFFFFFF	11111111111111111111111111111111
This displays the status of the signals DDB 1471 - 1440				
0B	6E	DDB 1503 - 1472	0xFFFFFFFF	11111111111111111111111111111111
This displays the status of the signals DDB 1503 - 1472				
0B	6F	DDB 1535 - 1504	0xFFFFFFFF	11111111111111111111111111111111
This displays the status of the signals DDB 1535 - 1504				
0B	70	DDB 1567 - 1536	0xFFFFFFFF	11111111111111111111111111111111
This displays the status of the signals DDB 1567 - 1536				
0B	71	DDB 1599 - 1568	0xFFFFFFFF	11111111111111111111111111111111
This displays the status of the signals DDB 1599 - 1568				
0B	72	DDB 1631 - 1600	0xFFFFFFFF	11111111111111111111111111111111
This displays the status of the signals DDB 1631 - 1600				
0B	73	DDB 1663 - 1632	0xFFFFFFFF	11111111111111111111111111111111

Col	Row	Menu Text	Default Setting	Available Setting
Description				
This displays the status of the signals DDB 1663 - 1632				
0B	74	DDB 1695 - 1664	0xFFFFFFFF	11111111111111111111111111111111
This displays the status of the signals DDB 1695 - 1664				
0B	75	DDB 1727 - 1696	0xFFFFFFFF	11111111111111111111111111111111
This displays the status of the signals DDB 1727 - 1696				
0B	76	DDB 1759- 1728	0xFFFFFFFF	11111111111111111111111111111111
This displays the status of the signals DDB 1759- 1728				
0B	77	DDB 1791- 1760	0xFFFFFFFF	11111111111111111111111111111111
This displays the status of the signals DDB 1791- 1760				
0B	78	DDB 1823 - 1792	0xFFFFFFFF	11111111111111111111111111111111
This displays the status of the signals DDB 1823 - 1792				
0B	79	DDB 1855 - 1824	0xFFFFFFFF	11111111111111111111111111111111
This displays the status of the signals DDB 1855 - 1824				
0B	7A	DDB 1887 - 1856	0xFFFFFFFF	11111111111111111111111111111111
This displays the status of the signals DDB 1887 - 1856				
0B	7B	DDB 1919 - 1888	0xFFFFFFFF	11111111111111111111111111111111
This displays the status of the signals DDB 1919 - 1888				
0B	7C	DDB 1951 - 1920	0xFFFFFFFF	11111111111111111111111111111111
This displays the status of the signals DDB 1951 - 1920				
0B	7D	DDB 1983 - 1952	0xFFFFFFFF	11111111111111111111111111111111
This displays the status of the signals DDB 1983 - 1952				
0B	7E	DDB 2015 - 1984	0xFFFFFFFF	11111111111111111111111111111111
This displays the status of the signals DDB 2015 - 1984				
0B	7F	DDB 2047 - 2016	0xFFFFFFFF	11111111111111111111111111111111
This displays the status of the signals DDB 2047 - 2016				

5.4 Disturbance Recorder Settings

The disturbance recorder settings include the record duration and trigger position, selection of analog and digital signals to record, and the signal sources that trigger the recording.

The precise event recorder column (“Disturb. Recorder” menu) is visible when the “Disturb recorder” setting (“Configuration” column) = “visible”.

Note	*In previous editions of this manual, this topic was described as the “Precise Event Recorder Settings”.*

Col	Row	Menu Text	Default Setting	Available Setting
Description				
0C	00	DISTURB RECORDER		
DISTURBANCE RECORDER				
0C	01	Duration	1.5 s	0.1s to 10.5s step 0.01s
This sets the overall recording time.				
0C	02	Trigger Position	33.3%	0% to 100% step 0.10%

Col	Row	Menu Text	Default Setting	Available Setting
Description				
This sets the trigger point as a percentage of the duration. For example, the default settings show that the overall recording time is set to 1.5s with the trigger point being at 33.3% of this, giving 0.5 s pre-fault and 1.0 s post event recording times.				
0C	03	Trigger Mode	Single	Single / Extended
When set to single mode, if a further trigger occurs whilst a recording is taking place, the recorder will ignore the trigger.				
0C	0D	Digital Input 1	Relay 1	Any O/P Contacts or Any Opto Inputs or Internal Digital Signals
The relay 1 output digital channel is assigned to this channel. The digital channel will trigger the precise event recorder when the corresponding assigned precise event will occur. In this case, the digital recorder will trigger when the output R1 will change. Following lines indicate default signals for the 32 channels.				
0C	0E	Input 1 Trigger	No Trigger	No Trigger, Trigger L/H, Trigger H/L
This digital channel will not trigger the precise event recorder. When “Trigger L/H” is selected, the channel will trigger the precise event recorder when changing from ‘0’ (low Level) to ‘1’ (High level). If “Trigger H/L” is selected, it will trigger when changing from ‘1’ (high level) to ‘0’ (low level). The following rows give the default settings up to channel 32.				
0C	0F	Digital Input 2	Relay 2	Any O/P Contacts or Any Opto Inputs or Internal Digital Signals
Same as Digital Input 1				
0C	10	Input 2 Trigger	No Trigger	No Trigger, Trigger L/H, Trigger H/L
Same as Input 1 Trigger				
0C	11	Digital Input 3	Relay 3	Any O/P Contacts or Any Opto Inputs or Internal Digital Signals
Same as Digital Input 1				
0C	12	Input 3 Trigger	Trigger L/H	No Trigger, Trigger L/H, Trigger H/L
Same as Input 1 Trigger				
0C	13	Digital Input 4	Relay 4	Any O/P Contacts or Any Opto Inputs or Internal Digital Signals
Same as Digital Input 1				
0C	14	Input 4 Trigger	No Trigger	No Trigger, Trigger L/H, Trigger H/L
Same as Input 1 Trigger				
0C	15	Digital Input 5	Relay 5	Any O/P Contacts or Any Opto Inputs or Internal Digital Signals
Same as Digital Input 1				
0C	16	Input 5 Trigger	No Trigger	No Trigger, Trigger L/H, Trigger H/L
Same as Input 1 Trigger				
0C	17	Digital Input 6	Relay 6	Any O/P Contacts or Any Opto Inputs or Internal Digital Signals
Same as Digital Input 1				
0C	18	Input 6 Trigger	No Trigger	No Trigger, Trigger L/H, Trigger H/L
Same as Input 1 Trigger				
0C	19	Digital Input 7	Relay 7	Any O/P Contacts or Any Opto Inputs or Internal Digital Signals
Same as Digital Input 1				
0C	1A	Input 7 Trigger	No Trigger	No Trigger, Trigger L/H, Trigger H/L
Same as Input 1 Trigger				
0C	1B	Digital Input 8	Relay 8	Any O/P Contacts or Any Opto Inputs or Internal Digital Signals
Same as Digital Input 1				
0C	1C	Input 8 Trigger	No Trigger	No Trigger, Trigger L/H, Trigger H/L

Col	Row	Menu Text	Default Setting	Available Setting
Description				
Same as Input 1 Trigger				
0C	1D	Digital Input 9	Relay 9	Any O/P Contacts or Any Opto Inputs or Internal Digital Signals
Same as Digital Input 1				
0C	1E	Input 9 Trigger	No Trigger	No Trigger, Trigger L/H, Trigger H/L
Same as Input 1 Trigger				
0C	1F	Digital Input 10	Relay 10	Any O/P Contacts or Any Opto Inputs or Internal Digital Signals
Same as Digital Input 1				
0C	20	Input 10 Trigger	No Trigger	No Trigger, Trigger L/H, Trigger H/L
Same as Input 1 Trigger				
0C	21	Digital Input 11	Relay 11	Any O/P Contacts or Any Opto Inputs or Internal Digital Signals
Same as Digital Input 1				
0C	22	Input 11 Trigger	No Trigger	No Trigger, Trigger L/H, Trigger H/L
Same as Input 1 Trigger				
0C	23	Digital Input 12	Relay 12	Any O/P Contacts or Any Opto Inputs or Internal Digital Signals
Same as Digital Input 1				
0C	24	Input 12 Trigger	No Trigger	No Trigger, Trigger L/H, Trigger H/L
Same as Input 1 Trigger				
0C	25	Digital Input 13	Opto 1	Any O/P Contacts or Any Opto Inputs or Internal Digital Signals
Same as Digital Input 1				
0C	26	Input 13 Trigger	No Trigger	No Trigger, Trigger L/H, Trigger H/L
Same as Input 1 Trigger				
0C	27	Digital Input 14	Opto 2	Any O/P Contacts or Any Opto Inputs or Internal Digital Signals
Same as Digital Input 1				
0C	28	Input 14 Trigger	No Trigger	No Trigger, Trigger L/H, Trigger H/L
Same as Input 1 Trigger				
0C	29	Digital Input 15	Opto 3	Any O/P Contacts or Any Opto Inputs or Internal Digital Signals
Same as Digital Input 1				
0C	2A	Input 15 Trigger	No Trigger	No Trigger, Trigger L/H, Trigger H/L
Same as Input 1 Trigger				
0C	2B	Digital Input 16	Opto 4	Any O/P Contacts or Any Opto Inputs or Internal Digital Signals
Same as Digital Input 1				
0C	2C	Input 16 Trigger	No Trigger	No Trigger, Trigger L/H, Trigger H/L
Same as Input 1 Trigger				
0C	2D	Digital Input 17	Opto 5	Any O/P Contacts or Any Opto Inputs or Internal Digital Signals
Same as Digital Input 1				
0C	2E	Input 17 Trigger	No Trigger	No Trigger, Trigger L/H, Trigger H/L
Same as Input 1 Trigger				

Col	Row	Menu Text	Default Setting	Available Setting
Description				
0C	2F	Digital Input 18	Opto 6	Any O/P Contacts or Any Opto Inputs or Internal Digital Signals
Same as Digital Input 1				
0C	30	Input 18 Trigger	No Trigger	No Trigger, Trigger L/H, Trigger H/L
Same as Input 1 Trigger				
0C	31	Digital Input 19	Opto 7	Any O/P Contacts or Any Opto Inputs or Internal Digital Signals
Same as Digital Input 1				
0C	32	Input 19 Trigger	No Trigger	No Trigger, Trigger L/H, Trigger H/L
Same as Input 1 Trigger				
0C	33	Digital Input 20	Opto 8	Any O/P Contacts or Any Opto Inputs or Internal Digital Signals
Same as Digital Input 1				
0C	34	Input 20 Trigger	No Trigger	No Trigger, Trigger L/H, Trigger H/L
Same as Input 1 Trigger				
0C	35	Digital Input 21	Opto 9	Any O/P Contacts or Any Opto Inputs or Internal Digital Signals
Same as Digital Input 1				
0C	36	Input 21 Trigger	No Trigger	No Trigger, Trigger L/H, Trigger H/L
Same as Input 1 Trigger				
0C	37	Digital Input 22	Opto 10	Any O/P Contacts or Any Opto Inputs or Internal Digital Signals
Same as Digital Input 1				
0C	38	Input 22 Trigger	No Trigger	No Trigger, Trigger L/H, Trigger H/L
Same as Input 1 Trigger				
0C	39	Digital Input 23	Opto 11	Any O/P Contacts or Any Opto Inputs or Internal Digital Signals
Same as Digital Input 1				
0C	3A	Input 23 Trigger	No Trigger	No Trigger, Trigger L/H, Trigger H/L
Same as Input 1 Trigger				
0C	3B	Digital Input 24	Opto 12	Any O/P Contacts or Any Opto Inputs or Internal Digital Signals
Same as Digital Input 1				
0C	3C	Input 24 Trigger	No Trigger	No Trigger, Trigger L/H, Trigger H/L
Same as Input 1 Trigger				
0C	3D	Digital Input 25	Unused	Any O/P Contacts or Any Opto Inputs or Internal Digital Signals
Same as Digital Input 1				
0C	3E	Input 25 Trigger	No Trigger	No Trigger, Trigger L/H, Trigger H/L
Same as Input 1 Trigger				
0C	3F	Digital Input 26	Unused	Any O/P Contacts or Any Opto Inputs or Internal Digital Signals
Same as Digital Input 1				
0C	40	Input 26 Trigger	No Trigger	No Trigger, Trigger L/H, Trigger H/L
Same as Input 1 Trigger				

Col	Row	Menu Text	Default Setting	Available Setting
Description				
0C	41	Digital Input 27	Unused	Any O/P Contacts or Any Opto Inputs or Internal Digital Signals
Same as Digital Input 1				
0C	42	Input 27 Trigger	No Trigger	No Trigger, Trigger L/H, Trigger H/L
Same as Input 1 Trigger				
0C	43	Digital Input 28	Unused	Any O/P Contacts or Any Opto Inputs or Internal Digital Signals
Same as Digital Input 1				
0C	44	Input 28 Trigger	No Trigger	No Trigger, Trigger L/H, Trigger H/L
Same as Input 1 Trigger				
0C	45	Digital Input 29	Unused	Any O/P Contacts or Any Opto Inputs or Internal Digital Signals
Same as Digital Input 1				
0C	46	Input 29 Trigger	No Trigger	No Trigger, Trigger L/H, Trigger H/L
Same as Input 1 Trigger				
0C	47	Digital Input 30	Unused	Any O/P Contacts or Any Opto Inputs or Internal Digital Signals
Same as Digital Input 1				
0C	48	Input 30 Trigger	No Trigger	No Trigger, Trigger L/H, Trigger H/L
Same as Input 1 Trigger				
0C	49	Digital Input 31	Unused	Any O/P Contacts or Any Opto Inputs or Internal Digital Signals
Same as Digital Input 1				
0C	4A	Input 31 Trigger	No Trigger	No Trigger, Trigger L/H, Trigger H/L
Same as Input 1 Trigger				
0C	4B	Digital Input 32	Unused	Any O/P Contacts or Any Opto Inputs or Internal Digital Signals
Same as Digital Input 1				
0C	4C	Input 32 Trigger	No Trigger	No Trigger, Trigger L/H, Trigger H/L
Same as Input 1 Trigger				

5.5 Communications

The communications settings apply to the rear communications ports only and will depend upon the particular protocol being used. Further details are given in the SCADA Communications chapter.

Depending on the values stored, the available settings may change too. The applicability of each setting is given in the description or available setting cell. These settings are available in the menu '**Communications'** column and are displayed.

These settings potentially cover a variety of different protocols and ports, including:

- Settings for Courier Protocol
- Settings for IEC60870-5-103
- Settings for Modbus Protocol

- Settings for DNP3.0 protocol
- Settings for Ethernet port – IEC61850 protocol
- Settings for Ethernet port – DNP3.0 Over Ethernet
- Settings for Rear Port 2

  The destination address on the master side do not need to configured for DNP3.0 Over Ethernet connection, and it is also not linked to the relay address. In Ethernet connection, it is the IP address that identifies the connection.

Col	Row	Menu Text	Default Setting	Available Setting
Description				
0E	00	COMMUNICATIONS		
0E	01	RP1 Protocol		Courier, IEC60870-5-103, MODBUS or DNP3.0
Indicates the communications protocol that will be used on the rear communications port.				
0E	02	RP1 Address	255	0 to 255 step 1
This cell sets the unique address for the device such that only one relay is accessed by master station software. The range shown here applies to Courier				
0E	02	RP1 Address	1	1 to 247 step 1
This cell sets the unique address for the device such that only one relay is accessed by master station software. The range shown here applies to Modbus				
0E	02	RP1 Address	1	0 to 254 step 1
This cell sets the unique address for the device such that only one relay is accessed by master station software. The range shown here applies to IEC60870-5-103				
0E	02	RP1 Address	1	0 to 65534 step 1
This cell sets the unique address for the device such that only one relay is accessed by master station software. The range shown here applies to DNP 3.0				
0E	03	RP1 InactivTimer	15 mins	1 min to 30 mins step 1 min
This cell controls how long the device will wait without receiving any messages on the rear port before it reverts to its default state, including resetting any password access that was enabled. This range is for the Courier protocol.				
0E	03	RP1 InactivTimer	15 mins	1 min to 30 mins step 1 min
This cell controls how long the device will wait without receiving any messages on the rear port before it reverts to its default state, including resetting any password access that was enabled. This range is for the MODBUS protocol.				
0E	03	RP1 InactivTimer	15 mins	1 min to 30 mins step 1 min
This cell controls how long the device will wait without receiving any messages on the rear port before it reverts to its default state, including resetting any password access that was enabled. This range is for the IEC60870-5-103 protocol.				
0E	04	RP1 Baud Rate	19200 bits/s	9600 bits/s, 19200 bits/s or 38400 bits/s
This cell controls the communication speed between device and master station. It is important that both device and master station are set at the same speed setting. This range is for the MODBUS protocol.				
0E	04	RP1 Baud Rate	19200 bits/s	9600 bits/s or 19200 bits/s
This cell controls the communication speed between device and master station. It is important that both device and master station are set at the same speed setting. This range is for the IEC60870-5-103 protocol.				
0E	04	RP1 Baud Rate	19200 bits/s	1200 bit/s, 2400 bits/s, 4800 bits/s, 9600 bits/s, 19200 bits/s or 38400 bits/s
This cell controls the communication speed between device and master station. It is important that both device and master station are set at the same speed setting. This range is for the DNP3.0 protocol.				
0E	05	RP1 Parity	None	Odd, Even or None
This cell controls the parity format used in the data frames. It is important that both device and master station are set with the same parity setting. This range applies to the MODBUS protocol.				
0E	05	RP1 Parity	None	Odd, Even or None

Col	Row	Menu Text	Default Setting	Available Setting
Description				
This cell controls the parity format used in the data frames. It is important that both device and master station are set with the same parity setting. This range applies to the DNP3.0 protocol.				
0E	06	RP1 Meas Period	15s	1 s to 60 s step 1 s
This cell controls the time interval that the device will use between sending measurement data to the master station. This range applies to the IEC60870-5-103 protocol.				
0E	07	RP1 PhysicalLink	RS485	RS485/Copper or Fibre optic
This cell defines whether an electrical connection ("Copper") or fiber optic connection is being used for communication between the master station and device. The optional fiber optic communications board will be required if 'Fiber optic' is to be selected. With Non-Ethernet Builds, this is a replication of RP1 communication protocol, so the Fibre Optic board should be fitted				
0E	08	RP1 Time Sync	Disabled	Disabled or Enabled
This setting enables or disables time synchronization with master Clock. This range applies to the DNP3.0 protocol.				
0E	09	Modbus IEC Time	Enabled	Disabled or Enabled
This cell allows the user to set the "Modbus IEC Time and Date format" at the user interface and front/2nd port besides the Modbus 1st rear port. When 'Disabled' is selected, the "Standard IEC" time format complies with IEC 60870-5-4 requirements such that byte 1 of the information is transmitted first, followed by bytes 2 through 7. When 'Enabled' is selected, the transmission of information is reversed (Reverse IEC time format).				
0E	0A	RP1 CS103Blcking	Disabled	Disabled, Monitor blocking, Command blocking
There are three settings associated with this cell: Disabled No blocking selected. Monitor Blocking When the monitor blocking DDB Signal is active high, either by energizing an opto input or control input, reading of the status information and precise event records is not permitted. When in this mode the device returns a "termination of general interrogation" message to the master station. Command Blocking When the command blocking DDB signal is active high, either by energizing an opto input or control input, all remote commands will be ignored (i.e. change setting group etc.). When in this mode the device returns a "negative acknowledgement of command" message to the master station. These settings apply to the CS103 build.				
0E	0B	RP1 Card Status		Data
This cell indicates the status of the rear communication board.				
0E	0C	RP1 Port Config	K-Bus	KBus or EIA(RS)485
This cell defines whether an electrical KBus or EIA(RS)485 is being used for communication between the master station and device. This range applies to the Courier protocol.				
0E	0D	RP1 Comms Mode	IEC60870 FT1.2	IEC60870 FT1.2 or 10-Bit No Parity
The choice is either IEC60870 FT1.2 for normal operation with 11-bit modems, or 10-bit no parity. This range applies to the Courier protocol.				
0E	0E	RP1 Baud Rate	19200 bits/s	1200 bit/s, 2400 bits/s, 4800 bits/s, 9600 bits/s, 19200 bits/s or 38400 bits/s
This cell controls the communication speed between device and master station. It is important that both device and master station are set at the same speed setting. This range applies to the Courier protocol.				
0E	0F	Meas Scaling	Primary	Primary or Secondary
0E	10	Message Gap (ms)	0 ms	0 ms to 50 ms step 1 ms
This setting allows the master station to have an interframe gap. This range applies to the DNP3.0 protocol.				
0E	11	DNP Need Time	10	1 to 30 step 1
Sets the time duration before next time synchronization request from the master.				
0E	12	DNP App Fragment	2048	100 to 2048 step 1
Maximum message length (application fragment size) transmitted by the device.				
0E	13	DNP App Timeout	2	1 to 120 step 1
Duration of time waited, after sending a message fragment and awaiting a confirmation from the master.				

Col	Row	Menu Text	Default Setting	Available Setting
Description				
0E	14	DNP SBO Timeout	10 s	1 s to 10 s step 1 s
Duration of time waited (Select Before Operate mode), after receiving a select command and awaiting an operate confirmation from the master.				
0E	15	DNP Link Timeout	0 s	0 s to 120 s step 1 s
Duration of time that the device will wait for a Data Link Confirm from the master. A value of 0 means data link support disabled and 1 to 120 seconds is the timeout setting.				
0E	1F	ETH Protocol	IEC61850	Data
IEC61850 (Ethernet) "Indicates the protocol used on the Network Interface Card. Build=IEC61850"				
0E	22	MAC Addr 1	Ethernet MAC Address	MAC address (Ethernet)
MAC address (Ethernet) "Shows the MAC address of the rear Ethernet port. Build=IEC61850"				
0E	22	MAC Addr 2	Ethernet MAC Address	MAC address (Ethernet)
MAC address (Ethernet) "Shows the MAC address of the rear Ethernet port. Build=IEC61850"				
0E	64	ETH Tunl Timeout	5 mins	1 min to 30 mins step 1 min
0E	70	Redundancy Conf	Sub-Heading	
This is visible when Model no. hardware option (Field 7) = Q or R, Build = IEC 61850				
0E	71	MAC Address	NIOS MAC Addr	Ethernet MAC Address
Indicates the MAC (Media Access Control) address of the rear Ethernet port. This address is formatted as a six-byte hexadecimal number, and is unique. This is visible when Model no. hardware option (Field 7) = Q or R, Build = IEC 61850				
0E	72	IP Address	0.0.0.0	IP Address
Indicates the IP (Internet Protocol) address of the rear Ethernet port. This address is formatted as a six-byte hexadecimal number, and is unique. This is visible when Model no. hardware option (Field 7) = Q or R, Build = IEC 61850				
0E	73	Subnet Mask	0.0.0.0	Subnet Mask
Displays the sub-network that the device is connected to. This is visible when Model no. hardware option (Field 7) = Q or R, Build = IEC 61850				
0E	74	Gateway	0.0.0.0	Gateway Address
Displays the IP address of the gateway (proxy) that the device is connected to, if any. This is visible when Model no. hardware option (Field 7) = Q or R, Build = IEC 61850				
0E	80	REAR PORT2 (RP2)		
0E	81	RP2 Protocol	Courier	Data
Indicates the communications protocol that will be used on the rear communications port.				
0E	84	RP2 Card Status		Data
This cell indicates the status of the rear communication board.				
0E	88	RP2 Port Config	EIA232 (RS232)	EIA RS232, EIA RS485 or Kbus
This cell defines whether an electrical EIA(RS)232, EIA(RS)485 or KBus is being used for communication.				
0E	8A	RP2 Comms Mode	IEC60870 FT1.2	IEC60870 FT1.2 or 10-bit
The choice is either IEC60870 FT1.2 for normal operation with 11-bit modems, or 10-bit no parity.				
0E	90	RP2 Address	255	0 to 255 step 1
This cell sets the unique address for the device such that only one relay is accessed by master station software.				
0E	92	RP2 InactivTimer	15 mins	1 min to 30 mins step 1 min
This cell controls how long the device will wait without receiving any messages on the rear port before it reverts to its default state, including resetting any password access that was enabled.				
0E	94	RP2 Baud Rate	19200 bits/s	9600 bits/s, 19200 bits/s or 38400 bits/s
This cell controls the communication speed between device and master station. It is important that both device and master station are set at the same speed setting.				

Col	Row	Menu Text	Default Setting	Available Setting
Description				
0E	A0	NIC Protocol	DNP3.0	Data
The NIC (Network Interface Cards) protocol cell indicates that DNP3.0 will be used on the rear Ethernet port.				
0E	A1	IP Address	0.0.0.0	IP Address
Indicates the IP (Internet Protocol) address of the rear Ethernet port. This address is formatted as a six-byte hexadecimal number, and is unique.				
0E	A2	Subnet Address	0.0.0.0	Subnet Address
Displays the sub-network that the device is connected to.				
0E	A4	Gateway	0.0.0.0	Gateway Address
Displays the IP address of the gateway (proxy) that the device is connected to, if any.				
0E	A5	DNP Time Synch	Disabled	Disabled or Enabled
If set to 'Enabled', the DNP3.0 master station can be used to synchronize the time on the device. If set to 'Disabled' either the internal free running clock, or IRIG+B input are used.				
0E	A6	Meas Scaling	Primary	Primary or Secondary
0E	A7	NIC Tunl Timeout	5 mins	1 min to 30 mins step 1 min
Duration of time waited before an inactive tunnel to MiCOM S1 Studio is reset.				
0E	A8	NIC Link Report	Alarm	Alarm, Event or None
Configures how a failed/unfitted network link (copper or fiber) is reported: Alarm - an alarm is raised for a failed link Event - an event is logged for a failed link None - nothing reported for a failed link.				
0E	A9	NIC Link Timeout	60 s	0.1 s to 60 s step 0.1 s
0E	AA	SNTP PARAMETERS		
0E	AB	SNTP Server 1	0.0.0.0	SNTP server 1 Address
Time synchronization is supported using SNTP (Simple Network Time Protocol); this protocol is used to synchronize the internal real time clock of the devices. This cell displays the IP address of the primary SNTP server.				
0E	AC	SNTP Server 2	0.0.0.0	SNTP server 2 Address
Time synchronization is supported using SNTP (Simple Network Time Protocol); this protocol is used to synchronize the internal real time clock of the devices. This cell displays the IP address of the secondary SNTP server.				
0E	AD	SNTP Poll Rate	64 s	64 s to 1024 s step 1 s
Duration of SNTP poll rate in seconds.				
0E	B1	DNP Need Time	10 mins	1 min to 30 mins step 1 min
Sets the time duration before next time synchronization request from the master.				
0E	B2	DNP App Fragment	2048	100 to 2048 step 1
Maximum message length (application fragment size) transmitted by the device.				
0E	B3	DNP App Timeout	2 s	1 s to 120 s step 1 s
Duration of time waited, after sending a message fragment and awaiting a confirmation from the master.				
0E	B4	DNP SBO Timeout	10 s	1 s to 10 s step 1 s
Duration of time waited (Select Before Operate mode), after receiving a select command and awaiting an operate confirmation from the master.				

5.6 Commissioning Tests

To help minimising the time required to test MiCOM relays the relay provides several test facilities under the 'COMMISSION TESTS' menu heading.

There are menu cells which allow the status of the opto-isolated inputs, output relay contacts, internal Digital Data Bus (DDB) signals and user-programmable LEDs to be monitored. Additionally there are cells to test the operation of the output contacts, user-programmable LEDs.

This column is visible when the "Commission tests" setting ("Configuration" column) = "visible".

Col	Row	Menu Text	Default Setting	Available Setting
Description				
0F	00	COMMISSION TESTS		
0F	01	Opto I/P Status	00000000000000000000000000000000	Data
This menu cell displays the status of the device's opto-isolated inputs (L01 to L32) as a binary string, a '1' indicating an energized opto-isolated input and a '0' a de-energized one				
0F	02	Opto I/P Status2	00000000000000000000000000000000	Data
As "Opto I/P Status" for opto-isolated inputs (L33 to L64).				
0F	03	Relay O/P Status	00000000000000000000000000000000	Data
This menu cell displays the status of the digital data bus (DDB) signals that result in energization of the output relays (R01 to R32) as a binary string, a '1' indicating an operated state and '0' a non-operated state. When the 'Test Mode' cell is set to 'Enabled' the 'Relay O/P Status' cell does not show the current status of the output relays and hence can not be used to confirm operation of the output relays. Therefore it will be necessary to monitor the state of each contact in turn.				
0F	04	Relay O/P Status2	00000000000000000000000000000000	Data
As "Relay O/P Status" for output relays (R33 to R60).				
0F	05	Test Port Status	00000000	Data
This menu cell displays the status of the eight digital data bus (DDB) signals that have been allocated in the 'Monitor Bit' cells.				
0F	07	Monitor Bit 1	640	Relay Label 01. This can be from 0 to 2047 - see the Programmable Logic chapter (P849/EN PL) for details of digital data bus signals.
The eight 'Monitor Bit' cells allow the user to select the status of which digital data bus signals can be observed in the 'Test Port Status' cell or via the monitor/download port.				
0F	08	Monitor Bit 2	642	Relay Label 02. This can be from 0 to 2047 - see the Programmable Logic chapter (P849/EN PL) for details of digital data bus signals.
The eight 'Monitor Bit' cells allow the user to select the status of which digital data bus signals can be observed in the 'Test Port Status' cell or via the monitor/download port.				
0F	09	Monitor Bit 3	644	Relay Label 03. This can be from 0 to 2047 - see the Programmable Logic chapter (P849/EN PL) for details of digital data bus signals.

Col	Row	Menu Text	Default Setting	Available Setting
Description				
The eight 'Monitor Bit' cells allow the user to select the status of which digital data bus signals can be observed in the 'Test Port Status' cell or via the monitor/download port.				
0F	0A	Monitor Bit 4	646	Relay Label 04. This can be from 0 to 2047 - see the Programmable Logic chapter (P849/EN PL) for details of digital data bus signals.
The eight 'Monitor Bit' cells allow the user to select the status of which digital data bus signals can be observed in the 'Test Port Status' cell or via the monitor/download port.				
0F	0B	Monitor Bit 5	648	Relay Label 05. This can be from 0 to 2047 - see the Programmable Logic chapter (P849/EN PL) for details of digital data bus signals.
The eight 'Monitor Bit' cells allow the user to select the status of which digital data bus signals can be observed in the 'Test Port Status' cell or via the monitor/download port.				
0F	0C	Monitor Bit 6	650	Relay Label 06. This can be from 0 to 2047 - see the Programmable Logic chapter (P849/EN PL) for details of digital data bus signals.
The eight 'Monitor Bit' cells allow the user to select the status of which digital data bus signals can be observed in the 'Test Port Status' cell or via the monitor/download port.				
0F	0D	Monitor Bit 7	652	Relay Label 07. This can be from 0 to 2047 - see the Programmable Logic chapter (P849/EN PL) for details of digital data bus signals.
The eight 'Monitor Bit' cells allow the user to select the status of which digital data bus signals can be observed in the 'Test Port Status' cell or via the monitor/download port.				
0F	0E	Monitor Bit 8	654	Relay Label 08. This can be from 0 to 2047 - see the Programmable Logic chapter (P849/EN PL) for details of digital data bus signals.
The eight 'Monitor Bit' cells allow the user to select the status of which digital data bus signals can be observed in the 'Test Port Status' cell or via the monitor/download port.				
0F	0F	Test Mode	Disabled	Disabled / Contacts blocked / Test Mode
The Test Mode menu cell enables a facility to directly test the output contacts by applying menu controlled test signals. To select test mode the Test Mode menu cell should be set to 'Contact blocked', which takes the relay out of service. It also causes an alarm condition to be recorded and the yellow 'Out of Service' LED to illuminate and an alarm message 'Out of Service' is given. Once testing is complete the cell must be set back to 'Disabled' to restore the device back to service.				
0F	10	Test Pattern	0000000000000000	0 = Not Operated 1 = Operated
This cell is used to select the output relay contacts (R01 to R32) that will be tested when the 'Contact Test' cell is set to 'Apply Test'.				
0F	11	Test Pattern2	00000000	0 = Not Operated 1 = Operated
This cell is used to select the output relay contacts (R33 to R60) that will be tested when the 'Contact Test' cell is set to 'Apply Test'.				
0F	12	Contact Test	No Operation	No Operation, Apply Test, Remove Test
When the 'Apply Test' command in this cell is issued the contacts set for operation (set to '1') in the 'Test Pattern' cell change state. After the test has been applied the command text on the LCD will change to 'No Operation' and the contacts will remain in the Test State until reset issuing the 'Remove Test' command. The command text on the LCD will again revert to 'No Operation' after the 'Remove Test' command has been issued. Note When the 'Test Mode' cell is set to 'Enabled' the 'Relay O/P Status' cell does not show the current status of the output relays and hence can not be used to confirm operation of the output relays. Therefore it will be necessary to monitor the state of each contact in turn.				
0F	13	Test LEDs	No Operation	No Operation or Apply Test

Col	Row	Menu Text	Default Setting	Available Setting
Description				
When the 'Apply Test' command in this cell is issued the eighteen user-programmable LEDs will illuminate for approximately 2 seconds before they extinguish and the command text on the LCD reverts to 'No Operation'.				
0F	15	Red LED Status	000001000100000000	Data
This cell is an eighteen bit binary string that indicates which of the user-programmable LEDs on the device are illuminated with the Red LED input active when accessing the device from a remote location, a '1' indicating a particular LED is lit and a '0' not lit.				
0F	16	Green LED Status	000001000100000000	Data
This cell is an eighteen bit binary string that indicates which of the user-programmable LEDs on the device are illuminated with the Green LED input active when accessing the device from a remote location, a '1' indicating a particular LED is lit and a '0' not lit.				
0F	20	DDB 31 - 0	00000000000000000000000000000000	Data
Displays the status of DDB signals DDB 31 - 0				
0F	21	DDB 63 - 32	00000000000000000000000000000000	Data
Displays the status of DDB signals DDB 63 - 32				
0F	22	DDB 95 - 64	00000000000000000000000000000000	Data
Displays the status of DDB signals DDB 95 - 64				
0F	23	DDB 127 - 96	00000000000000000000000000000000	Data
Displays the status of DDB signals DDB 127 - 96				
0F	24	DDB 159 - 128	00000000000000000000000000000000	Data
Displays the status of DDB signals DDB 159 - 128				
0F	25	DDB 191 - 160	00000000000000000000000000000000	Data
Displays the status of DDB signals DDB 191 - 160				
0F	26	DDB 223 - 192	00000000000000000000000000000000	Data
Displays the status of DDB signals DDB 223 - 192				
0F	27	DDB 255 - 224	00000000000000000000000000000000	Data
Displays the status of DDB signals DDB 255 - 224				
0F	28	DDB 287 - 256	00000000000000000000000000000000	Data
Displays the status of DDB signals DDB 287 - 256				
0F	29	DDB 319 - 288	00000000000000000000000000000000	Data
Displays the status of DDB signals DDB 319 - 288				
0F	2A	DDB 351 - 320	00000000000000000000000000000000	Data
Displays the status of DDB signals DDB 351 - 320				
0F	2B	DDB 383 - 352	00000000000000000000000000000000	Data
Displays the status of DDB signals DDB 383 - 352				
0F	2C	DDB 415 - 384	00000000000000000000000000000000	Data
Displays the status of DDB signals DDB 415 - 384				

Col	Row	Menu Text	Default Setting	Available Setting
Description				
0F	2D	DDB 447 - 416	00000000000000000000000000000000	Data
Displays the status of DDB signals DDB 447 - 416				
0F	2E	DDB 479 - 448	00000000000000000000000000000000	Data
Displays the status of DDB signals DDB 479 - 448				
0F	2F	DDB 511 - 480	00000000000000000000000000000000	Data
Displays the status of DDB signals DDB 511 - 480				
0F	30	DDB 543 - 512	00000000000000000000000000000000	Data
Displays the status of DDB signals DDB 543 - 512				
0F	31	DDB 575 - 544	00000000000000000000000000000000	Data
Displays the status of DDB signals DDB 575 - 544				
0F	32	DDB 607 - 576	00000000000000000000000000000000	Data
Displays the status of DDB signals DDB 607 - 576				
0F	33	DDB 639 - 608	00000000000000000000000000000000	Data
Displays the status of DDB signals DDB 639 - 608				
0F	34	DDB 671 - 640	00000000000000000000000000000000	Data
Displays the status of DDB signals DDB 671 - 640				
0F	35	DDB 703 - 672	00000000000000000000000000000000	Data
Displays the status of DDB signals DDB 703 - 672				
0F	36	DDB 735 - 704	00000000000000000000000000000000	Data
Displays the status of DDB signals DDB 735 - 704				
0F	37	DDB 767 - 736	00000000000000000000000000000000	Data
Displays the status of DDB signals DDB 767 - 736				
0F	38	DDB 799 - 768	00000000000000000000000000000000	Data
Displays the status of DDB signals DDB 799 - 768				
0F	39	DDB 831 - 800	00000000000000000000000000000000	Data
Displays the status of DDB signals DDB 831 - 800				
0F	3A	DDB 863 - 832	00000000000000000000000000000000	Data
Displays the status of DDB signals DDB 863 - 832				
0F	3B	DDB 895 - 864	00000000000000000000000000000000	Data
Displays the status of DDB signals DDB 895 - 864				
0F	3C	DDB 927 - 896	00000000000000000000000000000000	Data
Displays the status of DDB signals DDB 927 - 896				

Col	Row	Menu Text	Default Setting	Available Setting
Description				
0F	3D	DDB 959 - 928	00000000000000000000000000000000	Data
Displays the status of DDB signals DDB 959 - 928				
0F	3E	DDB 991 - 960	00000000000000000000000000000000	Data
Displays the status of DDB signals DDB 991 - 960				
0F	3F	DDB 1023 - 992	00000000000000000000000000000000	Data
Displays the status of DDB signals DDB 1023 - 992				
0F	40	DDB 1055 - 1024	00000000000000000000000000000000	Data
Displays the status of DDB signals DDB 1055 - 1024				
0F	41	DDB 1087 - 1056	00000000000000000000000000000000	Data
Displays the status of DDB signals DDB 1087 - 1056				
0F	42	DDB 1119 - 1088	00000000000000000000000000000000	Data
Displays the status of DDB signals DDB 1119 - 1088				
0F	43	DDB 1151 - 1120	00000000000000000000000000000000	Data
Displays the status of DDB signals DDB 1151 - 1120				
0F	44	DDB 1183 - 1152	00000000000000000000000000000000	Data
Displays the status of DDB signals DDB 1183 - 1152				
0F	45	DDB 1215 - 1184	00000000000000000000000000000000	Data
Displays the status of DDB signals DDB 1215 - 1184				
0F	46	DDB 1247 - 1216	00000000000000000000000000000000	Data
Displays the status of DDB signals DDB 1247 - 1216				
0F	47	DDB 1279 - 1248	00000000000000000000000000000000	Data
Displays the status of DDB signals DDB 1279 - 1248				
0F	48	DDB 1311 - 1280	00000000000000000000000000000000	Data
Displays the status of DDB signals DDB 1311 - 1280				
0F	49	DDB 1343 - 1312	00000000000000000000000000000000	Data
Displays the status of DDB signals DDB 1343 - 1312				
0F	4A	DDB 1375 - 1344	00000000000000000000000000000000	Data
Displays the status of DDB signals DDB 1375 - 1344				
0F	4B	DDB 1407 - 1376	00000000000000000000000000000000	Data
Displays the status of DDB signals DDB 1407 - 1376				
0F	4C	DDB 1439 - 1408	00000000000000000000000000000000	Data
Displays the status of DDB signals DDB 1439 - 1408				

Col	Row	Menu Text	Default Setting	Available Setting
Description				
0F	4D	DDB 1471 - 1440	00000000000000000000000000000000	Data
Displays the status of DDB signals DDB 1471 - 1440				
0F	4E	DDB 1503 - 1472	00000000000000000000000000000000	Data
Displays the status of DDB signals DDB 1503 - 1472				
0F	4F	DDB 1535 - 1504	00000000000000000000000000000000	Data
Displays the status of DDB signals DDB 1535 - 1504				
0F	50	DDB 1567 - 1536	00000000000000000000000000000000	Data
Displays the status of DDB signals DDB 1567 - 1536				
0F	51	DDB 1599 - 1568	00000000000000000000000000000000	Data
Displays the status of DDB signals DDB 1599 - 1568				
0F	52	DDB 1631 - 1600	00000000000000000000000000000000	Data
Displays the status of DDB signals DDB 1631 - 1600				
0F	53	DDB 1663 - 1632	00000000000000000000000000000000	Data
Displays the status of DDB signals DDB 1663 - 1632				
0F	54	DDB 1695 - 1664	00000000000000000000000000000000	Data
Displays the status of DDB signals DDB 1695 - 1664				
0F	55	DDB 1727 - 1696	00000000000000000000000000000000	Data
Displays the status of DDB signals DDB 1727 - 1696				
0F	56	DDB 1759- 1728	00000000000000000000000000000000	Data
Displays the status of DDB signals DDB 1759- 1728				
0F	57	DDB 1791- 1760	00000000000000000000000000000000	Data
Displays the status of DDB signals DDB 1791- 1760				
0F	58	DDB 1823 - 1792	00000000000000000000000000000000	Data
Displays the status of DDB signals DDB 1823 - 1792				
0F	59	DDB 1855 - 1824	00000000000000000000000000000000	Data
Displays the status of DDB signals DDB 1855 - 1824				
0F	5A	DDB 1887 - 1856	00000000000000000000000000000000	Data
Displays the status of DDB signals DDB 1887 - 1856				
0F	5B	DDB 1919 - 1888	00000000000000000000000000000000	Data
Displays the status of DDB signals DDB 1919 - 1888				
0F	5C	DDB 1951 - 1920	00000000000000000000000000000000	Data
Displays the status of DDB signals DDB 1951 - 1920				

Col	Row	Menu Text	Default Setting	Available Setting
Description				
0F	5D	DDB 1983 - 1952	00000000000000000000000000000000	Data
Displays the status of DDB signals DDB 1983 - 1952				
0F	5E	DDB 2015 - 1984	00000000000000000000000000000000	Data
Displays the status of DDB signals DDB 2015 - 1984				
0F	5F	DDB 2047 - 2016	00000000000000000000000000000000	Data
Displays the status of DDB signals DDB 2047 - 2016				
0F	FF	Unused		

5.7 Opto Configuration

This menu is used to set the opto-isolated inputs.

Col	Row	Menu Text	Default Setting	Available Setting
Description				
11	00	OPTO CONFIG		
11	01	Global Nominal V	48/54V	24/27V, 30/34V, 48/54V, 110/125V, 220/250V, Custom
Sets the nominal battery voltage for all opto inputs by selecting one of the five standard ratings in the Global Nominal V settings. If Custom is selected then each opto input can individually be set to a nominal voltage value.				
11	02	Opto Input 1	48/54V	24/27V, 30/34V, 48/54V, 110/125V, 220/250V
Sets the nominal battery voltage for the relevant opto input by selecting one of the five standard ratings in the Global Nominal V settings.				
11	03	Opto Input 2	48/54V	24/27V, 30/34V, 48/54V, 110/125V, 220/250V
Sets the nominal battery voltage for the relevant opto input by selecting one of the five standard ratings in the Global Nominal V settings.				
11	04	Opto Input 3	48/54V	24/27V, 30/34V, 48/54V, 110/125V, 220/250V
Sets the nominal battery voltage for the relevant opto input by selecting one of the five standard ratings in the Global Nominal V settings.				
11	05	Opto Input 4	48/54V	24/27V, 30/34V, 48/54V, 110/125V, 220/250V
Sets the nominal battery voltage for the relevant opto input by selecting one of the five standard ratings in the Global Nominal V settings.				
11	06	Opto Input 5	48/54V	24/27V, 30/34V, 48/54V, 110/125V, 220/250V
Sets the nominal battery voltage for the relevant opto input by selecting one of the five standard ratings in the Global Nominal V settings.				
11	07	Opto Input 6	48/54V	24/27V, 30/34V, 48/54V, 110/125V, 220/250V
Sets the nominal battery voltage for the relevant opto input by selecting one of the five standard ratings in the Global Nominal V settings.				

Col	Row	Menu Text	Default Setting	Available Setting
Description				
11	08	Opto Input 7	48/54V	24/27V, 30/34V, 48/54V, 110/125V, 220/250V
Sets the nominal battery voltage for the relevant opto input by selecting one of the five standard ratings in the Global Nominal V settings.				
11	09	Opto Input 8	48/54V	24/27V, 30/34V, 48/54V, 110/125V, 220/250V
Sets the nominal battery voltage for the relevant opto input by selecting one of the five standard ratings in the Global Nominal V settings.				
11	0A	Opto Input 9	48/54V	24/27V, 30/34V, 48/54V, 110/125V, 220/250V
Sets the nominal battery voltage for the relevant opto input by selecting one of the five standard ratings in the Global Nominal V settings.				
11	0B	Opto Input 10	48/54V	24/27V, 30/34V, 48/54V, 110/125V, 220/250V
Sets the nominal battery voltage for the relevant opto input by selecting one of the five standard ratings in the Global Nominal V settings.				
11	0C	Opto Input 11	48/54V	24/27V, 30/34V, 48/54V, 110/125V, 220/250V
Sets the nominal battery voltage for the relevant opto input by selecting one of the five standard ratings in the Global Nominal V settings.				
11	0D	Opto Input 12	48/54V	24/27V, 30/34V, 48/54V, 110/125V, 220/250V
Sets the nominal battery voltage for the relevant opto input by selecting one of the five standard ratings in the Global Nominal V settings.				
11	0E	Opto Input 13	48/54V	24/27V, 30/34V, 48/54V, 110/125V, 220/250V
Sets the nominal battery voltage for the relevant opto input by selecting one of the five standard ratings in the Global Nominal V settings.				
11	0F	Opto Input 14	48/54V	24/27V, 30/34V, 48/54V, 110/125V, 220/250V
Sets the nominal battery voltage for the relevant opto input by selecting one of the five standard ratings in the Global Nominal V settings.				
11	10	Opto Input 15	48/54V	24/27V, 30/34V, 48/54V, 110/125V, 220/250V
Sets the nominal battery voltage for the relevant opto input by selecting one of the five standard ratings in the Global Nominal V settings.				
11	11	Opto Input 16	48/54V	24/27V, 30/34V, 48/54V, 110/125V, 220/250V
Sets the nominal battery voltage for the relevant opto input by selecting one of the five standard ratings in the Global Nominal V settings.				
11	12	Opto Input 17	48/54V	24/27V, 30/34V, 48/54V, 110/125V, 220/250V
Sets the nominal battery voltage for the relevant opto input by selecting one of the five standard ratings in the Global Nominal V settings.				
11	13	Opto Input 18	48/54V	24/27V, 30/34V, 48/54V, 110/125V, 220/250V
Sets the nominal battery voltage for the relevant opto input by selecting one of the five standard ratings in the Global Nominal V settings.				
11	14	Opto Input 19	48/54V	24/27V, 30/34V, 48/54V, 110/125V, 220/250V

Col	Row	Menu Text	Default Setting	Available Setting
Description				
Sets the nominal battery voltage for the relevant opto input by selecting one of the five standard ratings in the Global Nominal V settings.				
11	15	Opto Input 20	48/54V	24/27V, 30/34V, 48/54V, 110/125V, 220/250V
Sets the nominal battery voltage for the relevant opto input by selecting one of the five standard ratings in the Global Nominal V settings.				
11	16	Opto Input 21	48/54V	24/27V, 30/34V, 48/54V, 110/125V, 220/250V
Sets the nominal battery voltage for the relevant opto input by selecting one of the five standard ratings in the Global Nominal V settings.				
11	17	Opto Input 22	48/54V	24/27V, 30/34V, 48/54V, 110/125V, 220/250V
Sets the nominal battery voltage for the relevant opto input by selecting one of the five standard ratings in the Global Nominal V settings.				
11	18	Opto Input 23	48/54V	24/27V, 30/34V, 48/54V, 110/125V, 220/250V
Sets the nominal battery voltage for the relevant opto input by selecting one of the five standard ratings in the Global Nominal V settings.				
11	19	Opto Input 24	48/54V	24/27V, 30/34V, 48/54V, 110/125V, 220/250V
Sets the nominal battery voltage for the relevant opto input by selecting one of the five standard ratings in the Global Nominal V settings.				
11	1A	Opto Input 25	48/54V	24/27V, 30/34V, 48/54V, 110/125V, 220/250V
Sets the nominal battery voltage for the relevant opto input by selecting one of the five standard ratings in the Global Nominal V settings.				
11	1B	Opto Input 26	48/54V	24/27V, 30/34V, 48/54V, 110/125V, 220/250V
Sets the nominal battery voltage for the relevant opto input by selecting one of the five standard ratings in the Global Nominal V settings.				
11	1C	Opto Input 27	48/54V	24/27V, 30/34V, 48/54V, 110/125V, 220/250V
Sets the nominal battery voltage for the relevant opto input by selecting one of the five standard ratings in the Global Nominal V settings.				
11	1D	Opto Input 28	48/54V	24/27V, 30/34V, 48/54V, 110/125V, 220/250V
Sets the nominal battery voltage for the relevant opto input by selecting one of the five standard ratings in the Global Nominal V settings.				
11	1E	Opto Input 29	48/54V	24/27V, 30/34V, 48/54V, 110/125V, 220/250V
Sets the nominal battery voltage for the relevant opto input by selecting one of the five standard ratings in the Global Nominal V settings.				
11	1F	Opto Input 30	48/54V	24/27V, 30/34V, 48/54V, 110/125V, 220/250V
Sets the nominal battery voltage for the relevant opto input by selecting one of the five standard ratings in the Global Nominal V settings.				
11	20	Opto Input 31	48/54V	24/27V, 30/34V, 48/54V, 110/125V, 220/250V
Sets the nominal battery voltage for the relevant opto input by selecting one of the five standard ratings in the Global Nominal V settings.				

Col	Row	Menu Text	Default Setting	Available Setting
Description				
11	21	Opto Input 32	48/54V	24/27V, 30/34V, 48/54V, 110/125V, 220/250V
Sets the nominal battery voltage for the relevant opto input by selecting one of the five standard ratings in the Global Nominal V settings.				
11	22	Opto Input 33	48/54V	24/27V, 30/34V, 48/54V, 110/125V, 220/250V
Sets the nominal battery voltage for the relevant opto input by selecting one of the five standard ratings in the Global Nominal V settings.				
11	23	Opto Input 34	48/54V	24/27V, 30/34V, 48/54V, 110/125V, 220/250V
Sets the nominal battery voltage for the relevant opto input by selecting one of the five standard ratings in the Global Nominal V settings.				
11	24	Opto Input 35	48/54V	24/27V, 30/34V, 48/54V, 110/125V, 220/250V
Sets the nominal battery voltage for the relevant opto input by selecting one of the five standard ratings in the Global Nominal V settings.				
11	25	Opto Input 36	48/54V	24/27V, 30/34V, 48/54V, 110/125V, 220/250V
Sets the nominal battery voltage for the relevant opto input by selecting one of the five standard ratings in the Global Nominal V settings.				
11	26	Opto Input 37	48/54V	24/27V, 30/34V, 48/54V, 110/125V, 220/250V
Sets the nominal battery voltage for the relevant opto input by selecting one of the five standard ratings in the Global Nominal V settings.				
11	27	Opto Input 38	48/54V	24/27V, 30/34V, 48/54V, 110/125V, 220/250V
Sets the nominal battery voltage for the relevant opto input by selecting one of the five standard ratings in the Global Nominal V settings.				
11	28	Opto Input 39	48/54V	24/27V, 30/34V, 48/54V, 110/125V, 220/250V
Sets the nominal battery voltage for the relevant opto input by selecting one of the five standard ratings in the Global Nominal V settings.				
11	29	Opto Input 40	48/54V	24/27V, 30/34V, 48/54V, 110/125V, 220/250V
Sets the nominal battery voltage for the relevant opto input by selecting one of the five standard ratings in the Global Nominal V settings.				
11	2A	Opto Input 41	48/54V	24/27V, 30/34V, 48/54V, 110/125V, 220/250V
Sets the nominal battery voltage for the relevant opto input by selecting one of the five standard ratings in the Global Nominal V settings.				
11	2B	Opto Input 42	48/54V	24/27V, 30/34V, 48/54V, 110/125V, 220/250V
Sets the nominal battery voltage for the relevant opto input by selecting one of the five standard ratings in the Global Nominal V settings.				
11	2C	Opto Input 43	48/54V	24/27V, 30/34V, 48/54V, 110/125V, 220/250V
Sets the nominal battery voltage for the relevant opto input by selecting one of the five standard ratings in the Global Nominal V settings.				
11	2D	Opto Input 44	48/54V	24/27V, 30/34V, 48/54V, 110/125V, 220/250V

Col	Row	Menu Text	Default Setting	Available Setting
Description				
Sets the nominal battery voltage for the relevant opto input by selecting one of the five standard ratings in the Global Nominal V settings.				
11	2E	Opto Input 45	48/54V	24/27V, 30/34V, 48/54V, 110/125V, 220/250V
Sets the nominal battery voltage for the relevant opto input by selecting one of the five standard ratings in the Global Nominal V settings.				
11	2F	Opto Input 46	48/54V	24/27V, 30/34V, 48/54V, 110/125V, 220/250V
Sets the nominal battery voltage for the relevant opto input by selecting one of the five standard ratings in the Global Nominal V settings.				
11	30	Opto Input 47	48/54V	24/27V, 30/34V, 48/54V, 110/125V, 220/250V
Sets the nominal battery voltage for the relevant opto input by selecting one of the five standard ratings in the Global Nominal V settings.				
11	31	Opto Input 48	48/54V	24/27V, 30/34V, 48/54V, 110/125V, 220/250V
Sets the nominal battery voltage for the relevant opto input by selecting one of the five standard ratings in the Global Nominal V settings.				
11	32	Opto Input 49	48/54V	24/27V, 30/34V, 48/54V, 110/125V, 220/250V
Sets the nominal battery voltage for the relevant opto input by selecting one of the five standard ratings in the Global Nominal V settings.				
11	33	Opto Input 50	48/54V	24/27V, 30/34V, 48/54V, 110/125V, 220/250V
Sets the nominal battery voltage for the relevant opto input by selecting one of the five standard ratings in the Global Nominal V settings.				
11	34	Opto Input 51	48/54V	24/27V, 30/34V, 48/54V, 110/125V, 220/250V
Sets the nominal battery voltage for the relevant opto input by selecting one of the five standard ratings in the Global Nominal V settings.				
11	35	Opto Input 52	48/54V	24/27V, 30/34V, 48/54V, 110/125V, 220/250V
Sets the nominal battery voltage for the relevant opto input by selecting one of the five standard ratings in the Global Nominal V settings.				
11	36	Opto Input 53	48/54V	24/27V, 30/34V, 48/54V, 110/125V, 220/250V
Sets the nominal battery voltage for the relevant opto input by selecting one of the five standard ratings in the Global Nominal V settings.				
11	37	Opto Input 54	48/54V	24/27V, 30/34V, 48/54V, 110/125V, 220/250V
Sets the nominal battery voltage for the relevant opto input by selecting one of the five standard ratings in the Global Nominal V settings.				
11	38	Opto Input 55	48/54V	24/27V, 30/34V, 48/54V, 110/125V, 220/250V
Sets the nominal battery voltage for the relevant opto input by selecting one of the five standard ratings in the Global Nominal V settings.				
11	39	Opto Input 56	48/54V	24/27V, 30/34V, 48/54V, 110/125V, 220/250V
Sets the nominal battery voltage for the relevant opto input by selecting one of the five standard ratings in the Global Nominal V settings.				

Col	Row	Menu Text	Default Setting	Available Setting
Description				
11	3A	Opto Input 57	48/54V	24/27V, 30/34V, 48/54V, 110/125V, 220/250V
Sets the nominal battery voltage for the relevant opto input by selecting one of the five standard ratings in the Global Nominal V settings.				
11	3B	Opto Input 58	48/54V	24/27V, 30/34V, 48/54V, 110/125V, 220/250V
Sets the nominal battery voltage for the relevant opto input by selecting one of the five standard ratings in the Global Nominal V settings.				
11	3C	Opto Input 59	48/54V	24/27V, 30/34V, 48/54V, 110/125V, 220/250V
Sets the nominal battery voltage for the relevant opto input by selecting one of the five standard ratings in the Global Nominal V settings.				
11	3D	Opto Input 60	48/54V	24/27V, 30/34V, 48/54V, 110/125V, 220/250V
Sets the nominal battery voltage for the relevant opto input by selecting one of the five standard ratings in the Global Nominal V settings.				
11	3E	Opto Input 61	48/54V	24/27V, 30/34V, 48/54V, 110/125V, 220/250V
Sets the nominal battery voltage for the relevant opto input by selecting one of the five standard ratings in the Global Nominal V settings.				
11	3F	Opto Input 62	48/54V	24/27V, 30/34V, 48/54V, 110/125V, 220/250V
Sets the nominal battery voltage for the relevant opto input by selecting one of the five standard ratings in the Global Nominal V settings.				
11	40	Opto Input 63	48/54V	24/27V, 30/34V, 48/54V, 110/125V, 220/250V
Sets the nominal battery voltage for the relevant opto input by selecting one of the five standard ratings in the Global Nominal V settings.				
11	41	Opto Input 64	48/54V	24/27V, 30/34V, 48/54V, 110/125V, 220/250V
Sets the nominal battery voltage for the relevant opto input by selecting one of the five standard ratings in the Global Nominal V settings.				
11	50	Opto Filter Cntl	11111111111111111111111111111111	0 = Disable Filtering or 1 = Enable filtering
This menu is used to control the device's opto-isolated inputs L1 to L32. A '1' indicates an energized and operating device, a '0' indicates a de-energized				
11	51	Opto Filter Cntl2	11111111	0 = Disable Filtering or 1 = Enable filtering
Controls the next device's opto-isolated inputs.				
11	80	Characteristic	Standard 60%-80%	Standard 50% - 70 % / Standard 60%-80%
Controls the changement of state of opto-isolated inputs, according to the nominal voltage value.				

5.8 Control Inputs

The control inputs column displays the control inputs status. It can be used to set, or reset individually each control input.

The "CTRL INPUTS" column is visible when the "Commission tests" setting ("Configuration" column) = "visible".

Col	Row	Menu Text	Default Setting	Available Setting
Description				
12	00	CONTROL INPUTS		
12	01	Ctrl I/P Status	00000000000000000000000000000000	
Displays the status of the opto-isolated inputs from L1 (last digit) to L32 (first digit): “0” = Reset and “1” = Set. The control inputs can also be set and reset by setting a “1” to set or “0” to reset a control input.				
12	02	Control Input 1	No Operation	Set / Reset / No Operation
Sets or resets Control Input 1 individually.				
12	03	Control Input 2	No Operation	Set / Reset / No Operation
Sets or resets Control Input 2 individually.				
12	04	Control Input 3	No Operation	Set / Reset / No Operation
Sets or resets Control Input 3 individually.				
12	05	Control Input 4	No Operation	Set / Reset / No Operation
Sets or resets Control Input 4 individually.				
12	06	Control Input 5	No Operation	Set / Reset / No Operation
Sets or resets Control Input 5 individually.				
12	07	Control Input 6	No Operation	Set / Reset / No Operation
Sets or resets Control Input 6 individually.				
12	08	Control Input 7	No Operation	Set / Reset / No Operation
Sets or resets Control Input 7 individually.				
12	09	Control Input 8	No Operation	Set / Reset / No Operation
Sets or resets Control Input 8 individually.				
12	0A	Control Input 9	No Operation	Set / Reset / No Operation
Sets or resets Control Input 9 individually.				
12	0B	Control Input 10	No Operation	Set / Reset / No Operation
Sets or resets Control Input 10 individually.				
12	0C	Control Input 11	No Operation	Set / Reset / No Operation
Sets or resets Control Input 11 individually.				
12	0D	Control Input 12	No Operation	Set / Reset / No Operation
Sets or resets Control Input 12 individually.				
12	0E	Control Input 13	No Operation	Set / Reset / No Operation
Sets or resets Control Input 13 individually.				
12	0F	Control Input 14	No Operation	Set / Reset / No Operation
Sets or resets Control Input 14 individually.				
12	10	Control Input 15	No Operation	Set / Reset / No Operation
Sets or resets Control Input 15 individually.				
12	11	Control Input 16	No Operation	Set / Reset / No Operation
Sets or resets Control Input 16 individually.				
12	12	Control Input 17	No Operation	Set / Reset / No Operation
Sets or resets Control Input 17 individually.				
12	13	Control Input 18	No Operation	Set / Reset / No Operation
Sets or resets Control Input 18 individually.				
12	14	Control Input 19	No Operation	Set / Reset / No Operation
Sets or resets Control Input 19 individually.				
12	15	Control Input 20	No Operation	Set / Reset / No Operation

Col	Row	Menu Text	Default Setting	Available Setting
Description				
Sets or resets Control Input 20 individually.				
12	16	Control Input 21	No Operation	Set / Reset / No Operation
Sets or resets Control Input 21 individually.				
12	17	Control Input 22	No Operation	Set / Reset / No Operation
Sets or resets Control Input 22 individually.				
12	18	Control Input 23	No Operation	Set / Reset / No Operation
Sets or resets Control Input 23 individually.				
12	19	Control Input 24	No Operation	Set / Reset / No Operation
Sets or resets Control Input 24 individually.				
12	1A	Control Input 25	No Operation	Set / Reset / No Operation
Sets or resets Control Input 25 individually.				
12	1B	Control Input 26	No Operation	Set / Reset / No Operation
Sets or resets Control Input 26 individually.				
12	1C	Control Input 27	No Operation	Set / Reset / No Operation
Sets or resets Control Input 27 individually.				
12	1D	Control Input 28	No Operation	Set / Reset / No Operation
Sets or resets Control Input 28 individually.				
12	1E	Control Input 29	No Operation	Set / Reset / No Operation
Sets or resets Control Input 29 individually.				
12	1F	Control Input 30	No Operation	Set / Reset / No Operation
Sets or resets Control Input 30 individually.				
12	20	Control Input 31	No Operation	Set / Reset / No Operation
Sets or resets Control Input 31 individually.				
12	21	Control Input 32	No Operation	Set / Reset / No Operation
Sets or resets Control Input 32 individually.				

5.9 Ctrl I/P Config.

The control inputs function as software switches that can be set or reset either locally or remotely. These inputs can be used to trigger any function that they are connected to as part of the PSL.

This column is visible when the “Control I/P Config” setting (“Configuration” column) = “visible”.

Col	Row	Menu Text	Default Setting	Available Setting
Description				
13	00	CTRL I/P CONFIG		
13	01	Hotkey Enabled	11111111111111111111111111111111	
Setting to allow the control inputs to be individually assigned to the “Hotkey” menu by setting ‘1’ in the appropriate bit in the “Hotkey Enabled” cell. The hotkey menu allows the control inputs to be set, reset or pulsed without the need to enter the “CONTROL INPUTS” column				
13	10	Control Input 1	Latched	Latched, Pulsed

Col	Row	Menu Text	Default Setting	Available Setting
Description				
Configures the control inputs as either 'latched' or 'pulsed'. A latched control input will remain in the set state until a reset command is given, either by the menu or the serial communications. A pulsed control input, however, will remain energized for 10ms after the set command is given and will then reset automatically (i.e. no reset command required).				
13	11	Ctrl Command 1	SET/RESET	Set/Reset, ON/OFF, Enabled/Disabled, IN/OUT
Allows the SET / RESET text, displayed in the hotkey menu, to be changed to something more suitable for the application of an individual control input, such as "ON / OFF", "IN / OUT" etc.				
13	14	Control Input 2	Latched	Latched, Pulsed
Configures the control inputs as either 'latched' or 'pulsed'. A latched control input will remain in the set state until a reset command is given, either by the menu or the serial communications. A pulsed control input, however, will remain energized for 10ms after the set command is given and will then reset automatically (i.e. no reset command required).				
13	15	Ctrl Command 2	SET/RESET	Set/Reset, ON/OFF, Enabled/Disabled, IN/OUT
Allows the SET / RESET text, displayed in the hotkey menu, to be changed to something more suitable for the application of an individual control input, such as "ON / OFF", "IN / OUT" etc.				
13	18	Control Input 3	Latched	Latched, Pulsed
Configures the control inputs as either 'latched' or 'pulsed'. A latched control input will remain in the set state until a reset command is given, either by the menu or the serial communications. A pulsed control input, however, will remain energized for 10ms after the set command is given and will then reset automatically (i.e. no reset command required).				
13	19	Ctrl Command 3	SET/RESET	Set/Reset, ON/OFF, Enabled/Disabled, IN/OUT
Allows the SET / RESET text, displayed in the hotkey menu, to be changed to something more suitable for the application of an individual control input, such as "ON / OFF", "IN / OUT" etc.				
13	1C	Control Input 4	Latched	Latched, Pulsed
Configures the control inputs as either 'latched' or 'pulsed'. A latched control input will remain in the set state until a reset command is given, either by the menu or the serial communications. A pulsed control input, however, will remain energized for 10ms after the set command is given and will then reset automatically (i.e. no reset command required).				
13	1D	Ctrl Command 4	SET/RESET	Set/Reset, ON/OFF, Enabled/Disabled, IN/OUT
Allows the SET / RESET text, displayed in the hotkey menu, to be changed to something more suitable for the application of an individual control input, such as "ON / OFF", "IN / OUT" etc.				
13	20	Control Input 5	Latched	Latched, Pulsed
Configures the control inputs as either 'latched' or 'pulsed'. A latched control input will remain in the set state until a reset command is given, either by the menu or the serial communications. A pulsed control input, however, will remain energized for 10ms after the set command is given and will then reset automatically (i.e. no reset command required).				
13	21	Ctrl Command 5	SET/RESET	Set/Reset, ON/OFF, Enabled/Disabled, IN/OUT
Allows the SET / RESET text, displayed in the hotkey menu, to be changed to something more suitable for the application of an individual control input, such as "ON / OFF", "IN / OUT" etc.				
13	24	Control Input 6	Latched	Latched, Pulsed
Configures the control inputs as either 'latched' or 'pulsed'. A latched control input will remain in the set state until a reset command is given, either by the menu or the serial communications. A pulsed control input, however, will remain energized for 10ms after the set command is given and will then reset automatically (i.e. no reset command required).				
13	25	Ctrl Command 6	SET/RESET	Set/Reset, ON/OFF, Enabled/Disabled, IN/OUT
Allows the SET / RESET text, displayed in the hotkey menu, to be changed to something more suitable for the application of an individual control input, such as "ON / OFF", "IN / OUT" etc.				
13	28	Control Input 7	Latched	Latched, Pulsed
Configures the control inputs as either 'latched' or 'pulsed'. A latched control input will remain in the set state until a reset command is given, either by the menu or the serial communications. A pulsed control input, however, will remain energized for 10ms after the set command is given and will then reset automatically (i.e. no reset command required).				

Col	Row	Menu Text	Default Setting	Available Setting
Description				
13	29	Ctrl Command 7	SET/RESET	Set/Reset, ON/OFF, Enabled/Disabled, IN/OUT
Allows the SET / RESET text, displayed in the hotkey menu, to be changed to something more suitable for the application of an individual control input, such as “ON / OFF”, “IN / OUT” etc.				
13	2C	Control Input 8	Latched	Latched, Pulsed
Configures the control inputs as either ‘latched’ or ‘pulsed’. A latched control input will remain in the set state until a reset command is given, either by the menu or the serial communications. A pulsed control input, however, will remain energized for 10ms after the set command is given and will then reset automatically (i.e. no reset command required).				
13	2D	Ctrl Command 8	SET/RESET	Set/Reset, ON/OFF, Enabled/Disabled, IN/OUT
Allows the SET / RESET text, displayed in the hotkey menu, to be changed to something more suitable for the application of an individual control input, such as “ON / OFF”, “IN / OUT” etc.				
13	30	Control Input 9	Latched	Latched, Pulsed
Configures the control inputs as either ‘latched’ or ‘pulsed’. A latched control input will remain in the set state until a reset command is given, either by the menu or the serial communications. A pulsed control input, however, will remain energized for 10ms after the set command is given and will then reset automatically (i.e. no reset command required).				
13	31	Ctrl Command 9	SET/RESET	Set/Reset, ON/OFF, Enabled/Disabled, IN/OUT
Allows the SET / RESET text, displayed in the hotkey menu, to be changed to something more suitable for the application of an individual control input, such as “ON / OFF”, “IN / OUT” etc.				
13	34	Control Input 10	Latched	Latched, Pulsed
Configures the control inputs as either ‘latched’ or ‘pulsed’. A latched control input will remain in the set state until a reset command is given, either by the menu or the serial communications. A pulsed control input, however, will remain energized for 10ms after the set command is given and will then reset automatically (i.e. no reset command required).				
13	35	Ctrl Command 10	SET/RESET	Set/Reset, ON/OFF, Enabled/Disabled, IN/OUT
Allows the SET / RESET text, displayed in the hotkey menu, to be changed to something more suitable for the application of an individual control input, such as “ON / OFF”, “IN / OUT” etc.				
13	38	Control Input 11	Latched	Latched, Pulsed
Configures the control inputs as either ‘latched’ or ‘pulsed’. A latched control input will remain in the set state until a reset command is given, either by the menu or the serial communications. A pulsed control input, however, will remain energized for 10ms after the set command is given and will then reset automatically (i.e. no reset command required).				
13	39	Ctrl Command 11	SET/RESET	Set/Reset, ON/OFF, Enabled/Disabled, IN/OUT
Allows the SET / RESET text, displayed in the hotkey menu, to be changed to something more suitable for the application of an individual control input, such as “ON / OFF”, “IN / OUT” etc.				
13	3C	Control Input 12	Latched	Latched, Pulsed
Configures the control inputs as either ‘latched’ or ‘pulsed’. A latched control input will remain in the set state until a reset command is given, either by the menu or the serial communications. A pulsed control input, however, will remain energized for 10ms after the set command is given and will then reset automatically (i.e. no reset command required).				
13	3D	Ctrl Command 12	SET/RESET	Set/Reset, ON/OFF, Enabled/Disabled, IN/OUT
Allows the SET / RESET text, displayed in the hotkey menu, to be changed to something more suitable for the application of an individual control input, such as “ON / OFF”, “IN / OUT” etc.				
13	40	Control Input 13	Latched	Latched, Pulsed
Configures the control inputs as either ‘latched’ or ‘pulsed’. A latched control input will remain in the set state until a reset command is given, either by the menu or the serial communications. A pulsed control input, however, will remain energized for 10ms after the set command is given and will then reset automatically (i.e. no reset command required).				
13	41	Ctrl Command 13	SET/RESET	Set/Reset, ON/OFF, Enabled/Disabled, IN/OUT

Col	Row	Menu Text	Default Setting	Available Setting
Description				
Allows the SET / RESET text, displayed in the hotkey menu, to be changed to something more suitable for the application of an individual control input, such as “ON / OFF”, “IN / OUT” etc.				
13	44	Control Input 14	Latched	Latched, Pulsed
Configures the control inputs as either ‘latched’ or ‘pulsed’. A latched control input will remain in the set state until a reset command is given, either by the menu or the serial communications. A pulsed control input, however, will remain energized for 10ms after the set command is given and will then reset automatically (i.e. no reset command required).				
13	45	Ctrl Command 14	SET/RESET	Set/Reset, ON/OFF, Enabled/Disabled, IN/OUT
Allows the SET / RESET text, displayed in the hotkey menu, to be changed to something more suitable for the application of an individual control input, such as “ON / OFF”, “IN / OUT” etc.				
13	48	Control Input 15	Latched	Latched, Pulsed
Configures the control inputs as either ‘latched’ or ‘pulsed’. A latched control input will remain in the set state until a reset command is given, either by the menu or the serial communications. A pulsed control input, however, will remain energized for 10ms after the set command is given and will then reset automatically (i.e. no reset command required).				
13	49	Ctrl Command 15	SET/RESET	Set/Reset, ON/OFF, Enabled/Disabled, IN/OUT
Allows the SET / RESET text, displayed in the hotkey menu, to be changed to something more suitable for the application of an individual control input, such as “ON / OFF”, “IN / OUT” etc.				
13	4C	Control Input 16	Latched	Latched, Pulsed
Configures the control inputs as either ‘latched’ or ‘pulsed’. A latched control input will remain in the set state until a reset command is given, either by the menu or the serial communications. A pulsed control input, however, will remain energized for 10ms after the set command is given and will then reset automatically (i.e. no reset command required).				
13	4D	Ctrl Command 16	SET/RESET	Set/Reset, ON/OFF, Enabled/Disabled, IN/OUT
Allows the SET / RESET text, displayed in the hotkey menu, to be changed to something more suitable for the application of an individual control input, such as “ON / OFF”, “IN / OUT” etc.				
13	50	Control Input 17	Latched	Latched, Pulsed
Configures the control inputs as either ‘latched’ or ‘pulsed’. A latched control input will remain in the set state until a reset command is given, either by the menu or the serial communications. A pulsed control input, however, will remain energized for 10ms after the set command is given and will then reset automatically (i.e. no reset command required).				
13	51	Ctrl Command 17	SET/RESET	Set/Reset, ON/OFF, Enabled/Disabled, IN/OUT
Allows the SET / RESET text, displayed in the hotkey menu, to be changed to something more suitable for the application of an individual control input, such as “ON / OFF”, “IN / OUT” etc.				
13	54	Control Input 18	Latched	Latched, Pulsed
Configures the control inputs as either ‘latched’ or ‘pulsed’. A latched control input will remain in the set state until a reset command is given, either by the menu or the serial communications. A pulsed control input, however, will remain energized for 10ms after the set command is given and will then reset automatically (i.e. no reset command required).				
13	55	Ctrl Command 18	SET/RESET	Set/Reset, ON/OFF, Enabled/Disabled, IN/OUT
Allows the SET / RESET text, displayed in the hotkey menu, to be changed to something more suitable for the application of an individual control input, such as “ON / OFF”, “IN / OUT” etc.				
13	58	Control Input 19	Latched	Latched, Pulsed
Configures the control inputs as either ‘latched’ or ‘pulsed’. A latched control input will remain in the set state until a reset command is given, either by the menu or the serial communications. A pulsed control input, however, will remain energized for 10ms after the set command is given and will then reset automatically (i.e. no reset command required).				
13	59	Ctrl Command 19	SET/RESET	Set/Reset, ON/OFF, Enabled/Disabled, IN/OUT
Allows the SET / RESET text, displayed in the hotkey menu, to be changed to something more suitable for the application of an individual control input, such as “ON / OFF”, “IN / OUT” etc.				
13	5C	Control Input 20	Latched	Latched, Pulsed

Col	Row	Menu Text	Default Setting	Available Setting
Description				
Configures the control inputs as either 'latched' or 'pulsed'. A latched control input will remain in the set state until a reset command is given, either by the menu or the serial communications. A pulsed control input, however, will remain energized for 10ms after the set command is given and will then reset automatically (i.e. no reset command required).				
13	5D	Ctrl Command 20	SET/RESET	Set/Reset, ON/OFF, Enabled/Disabled, IN/OUT
Allows the SET / RESET text, displayed in the hotkey menu, to be changed to something more suitable for the application of an individual control input, such as "ON / OFF", "IN / OUT" etc.				
13	60	Control Input 21	Latched	Latched, Pulsed
Configures the control inputs as either 'latched' or 'pulsed'. A latched control input will remain in the set state until a reset command is given, either by the menu or the serial communications. A pulsed control input, however, will remain energized for 10ms after the set command is given and will then reset automatically (i.e. no reset command required).				
13	61	Ctrl Command 21	SET/RESET	Set/Reset, ON/OFF, Enabled/Disabled, IN/OUT
Allows the SET / RESET text, displayed in the hotkey menu, to be changed to something more suitable for the application of an individual control input, such as "ON / OFF", "IN / OUT" etc.				
13	64	Control Input 22	Latched	Latched, Pulsed
Configures the control inputs as either 'latched' or 'pulsed'. A latched control input will remain in the set state until a reset command is given, either by the menu or the serial communications. A pulsed control input, however, will remain energized for 10ms after the set command is given and will then reset automatically (i.e. no reset command required).				
13	65	Ctrl Command 22	SET/RESET	Set/Reset, ON/OFF, Enabled/Disabled, IN/OUT
Allows the SET / RESET text, displayed in the hotkey menu, to be changed to something more suitable for the application of an individual control input, such as "ON / OFF", "IN / OUT" etc.				
13	68	Control Input 23	Latched	Latched, Pulsed
Configures the control inputs as either 'latched' or 'pulsed'. A latched control input will remain in the set state until a reset command is given, either by the menu or the serial communications. A pulsed control input, however, will remain energized for 10ms after the set command is given and will then reset automatically (i.e. no reset command required).				
13	69	Ctrl Command 23	SET/RESET	Set/Reset, ON/OFF, Enabled/Disabled, IN/OUT
Allows the SET / RESET text, displayed in the hotkey menu, to be changed to something more suitable for the application of an individual control input, such as "ON / OFF", "IN / OUT" etc.				
13	6C	Control Input 24	Latched	Latched, Pulsed
Configures the control inputs as either 'latched' or 'pulsed'. A latched control input will remain in the set state until a reset command is given, either by the menu or the serial communications. A pulsed control input, however, will remain energized for 10ms after the set command is given and will then reset automatically (i.e. no reset command required).				
13	6D	Ctrl Command 24	SET/RESET	Set/Reset, ON/OFF, Enabled/Disabled, IN/OUT
Allows the SET / RESET text, displayed in the hotkey menu, to be changed to something more suitable for the application of an individual control input, such as "ON / OFF", "IN / OUT" etc.				
13	70	Control Input 25	Latched	Latched, Pulsed
Configures the control inputs as either 'latched' or 'pulsed'. A latched control input will remain in the set state until a reset command is given, either by the menu or the serial communications. A pulsed control input, however, will remain energized for 10ms after the set command is given and will then reset automatically (i.e. no reset command required).				
13	71	Ctrl Command 25	SET/RESET	Set/Reset, ON/OFF, Enabled/Disabled, IN/OUT
Allows the SET / RESET text, displayed in the hotkey menu, to be changed to something more suitable for the application of an individual control input, such as "ON / OFF", "IN / OUT" etc.				
13	74	Control Input 26	Latched	Latched, Pulsed
Configures the control inputs as either 'latched' or 'pulsed'. A latched control input will remain in the set state until a reset command is given, either by the menu or the serial communications. A pulsed control input, however, will remain energized for 10ms after the set command is given and will then reset automatically (i.e. no reset command required).				

Col	Row	Menu Text	Default Setting	Available Setting
Description				
13	75	Ctrl Command 26	SET/RESET	Set/Reset, ON/OFF, Enabled/Disabled, IN/OUT
Allows the SET / RESET text, displayed in the hotkey menu, to be changed to something more suitable for the application of an individual control input, such as “ON / OFF”, “IN / OUT” etc.				
13	78	Control Input 27	Latched	Latched, Pulsed
Configures the control inputs as either ‘latched’ or ‘pulsed’. A latched control input will remain in the set state until a reset command is given, either by the menu or the serial communications. A pulsed control input, however, will remain energized for 10ms after the set command is given and will then reset automatically (i.e. no reset command required).				
13	79	Ctrl Command 27	SET/RESET	Set/Reset, ON/OFF, Enabled/Disabled, IN/OUT
Allows the SET / RESET text, displayed in the hotkey menu, to be changed to something more suitable for the application of an individual control input, such as “ON / OFF”, “IN / OUT” etc.				
13	7C	Control Input 28	Latched	Latched, Pulsed
Configures the control inputs as either ‘latched’ or ‘pulsed’. A latched control input will remain in the set state until a reset command is given, either by the menu or the serial communications. A pulsed control input, however, will remain energized for 10ms after the set command is given and will then reset automatically (i.e. no reset command required).				
13	7D	Ctrl Command 28	SET/RESET	Set/Reset, ON/OFF, Enabled/Disabled, IN/OUT
Allows the SET / RESET text, displayed in the hotkey menu, to be changed to something more suitable for the application of an individual control input, such as “ON / OFF”, “IN / OUT” etc.				
13	80	Control Input 29	Latched	Latched, Pulsed
Configures the control inputs as either ‘latched’ or ‘pulsed’. A latched control input will remain in the set state until a reset command is given, either by the menu or the serial communications. A pulsed control input, however, will remain energized for 10ms after the set command is given and will then reset automatically (i.e. no reset command required).				
13	81	Ctrl Command 29	SET/RESET	Set/Reset, ON/OFF, Enabled/Disabled, IN/OUT
Allows the SET / RESET text, displayed in the hotkey menu, to be changed to something more suitable for the application of an individual control input, such as “ON / OFF”, “IN / OUT” etc.				
13	84	Control Input 30	Latched	Latched, Pulsed
Configures the control inputs as either ‘latched’ or ‘pulsed’. A latched control input will remain in the set state until a reset command is given, either by the menu or the serial communications. A pulsed control input, however, will remain energized for 10ms after the set command is given and will then reset automatically (i.e. no reset command required).				
13	85	Ctrl Command 30	SET/RESET	Set/Reset, ON/OFF, Enabled/Disabled, IN/OUT
Allows the SET / RESET text, displayed in the hotkey menu, to be changed to something more suitable for the application of an individual control input, such as “ON / OFF”, “IN / OUT” etc.				
13	88	Control Input 31	Latched	Latched, Pulsed
Configures the control inputs as either ‘latched’ or ‘pulsed’. A latched control input will remain in the set state until a reset command is given, either by the menu or the serial communications. A pulsed control input, however, will remain energized for 10ms after the set command is given and will then reset automatically (i.e. no reset command required).				
13	89	Ctrl Command 31	SET/RESET	Set/Reset, ON/OFF, Enabled/Disabled, IN/OUT
Allows the SET / RESET text, displayed in the hotkey menu, to be changed to something more suitable for the application of an individual control input, such as “ON / OFF”, “IN / OUT” etc.				
13	8C	Control Input 32	Latched	Latched, Pulsed
Configures the control inputs as either ‘latched’ or ‘pulsed’. A latched control input will remain in the set state until a reset command is given, either by the menu or the serial communications. A pulsed control input, however, will remain energized for 10ms after the set command is given and will then reset automatically (i.e. no reset command required).				
13	8D	Ctrl Command 32	SET/RESET	Set/Reset, ON/OFF, Enabled/Disabled, IN/OUT

Col	Row	Menu Text	Default Setting	Available Setting
Description				
Allows the SET / RESET text, displayed in the hotkey menu, to be changed to something more suitable for the application of an individual control input, such as “ON / OFF”, “IN / OUT” etc.				

5.10 InterMiCOM Communication Channel

The “INTERMICOM COMMS” column contains all the information to configure the communication channel and also contains the channel statistics and diagnostic facilities. The InterMiCOM communication can be enabled or disabled in the “Configuration” column.

Col	Row	Menu Text	Default Setting	Available Setting
Description				
15	00	INTERMICOM COMMS		
15	01	IM Input Status	00000000	Data
This cell displays the InterMiCOM Input status.				
15	02	IM Output Status	00000000	Data
This cell displays the InterMiCOM Output status.				
15	10	Source Address	1	1 to 10 step 1
The “source” and “receive” addresses are used to synchronize remote and local devices. Both relays must be programmed with a unique pair of addresses that correspond with each other in the “Source Address” and “Receive Address” cells				
15	11	Received Address	2	1 to 10 step 1
The “source” and “receive” addresses are used to synchronize remote and local devices. Both relays must be programmed with a unique pair of addresses that correspond with each other in the “Source Address” and “Receive Address” cells				
15	12	Baud Rate	9600	600 / 1200 / 2400 / 4800 / 9600 / 19200
This cell controls the communication speed between device and master station. It is important that both device and master station are set at the same speed setting.				
15	20	Ch Statistics	Invisible	Invisible or Visible
Activates or hides the channel statistics. When visible is selected, the following menus are displayed. Otherwise, next menu is “Ch Diagnostics”.				
15	21	Rx Direct Count		Data
Number of Permissive messages received with the correct message structure.				
15	22	Rx Perm Count		Data
Number of Blocking messages received with the correct message structure.				
15	23	Rx Block Count		Data
Number of Blocking messages received with the correct message structure.				
15	24	Rx NewDataCount		Data
Number of different messages received.				
15	25	Rx ErroredCount		Data
Number of incomplete or incorrectly formatted messages received.				
15	26	Lost Messages		Data
Number of messages lost within the previous time period set in “Alarm Window” cell.				
15	30	Elapsed Time		Data
Time in seconds since the InterMiCOM channel statistics were reset.				

Col	Row	Menu Text	Default Setting	Available Setting
Description				
15	31	Reset Statistics	No	No or Yes
Reset channel statistics command.				
15	40	Ch Diagnostics	Invisible	Invisible or Visible
Reset channel statistics command.				
15	41	Data CD Status		OK / Fail / Card Not Fitted / Unavailable
Indicates when the “Data Carrier Detect” (DCD) line (pin 1) is energised. OK = DCD is energised, FAIL = DCD is de-energised, Absent = InterMiCOM board is not fitted, Unavailable = hardware error present				
15	42	FrameSync Status		OK / Fail / Card Not Fitted / Unavailable
Indicates when the message structure and synchronisation is valid. OK = valid message structure and synchronisation ,FAIL = synchronisation has been lost, Card Not Fitted = InterMiCOM board is not fitted, Unavailable = hardware error present				
15	43	Message Status		OK / Fail / Card Not Fitted / Unavailable
Indicates when the percentage of received valid messages has fallen below the “IM Msg Alarm Lvl” setting within the alarm time period. OK = acceptable ratio of lost messages, FAIL = unacceptable ratio of lost messages, Card Not Fitted = InterMiCOM board is not fitted, Unavailable = hardware error present				
15	44	Channel Status		OK / Fail / Card Not Fitted / Unavailable
Indicates the state of the InterMiCOM communication channel OK = channel healthy, FAIL = channel failure, Card Not Fitted = InterMiCOM board is not fitted, Unavailable = hardware error present				
15	45	IM H/W Status		OK / Fail / Card Not Fitted / Unavailable
Indicates the state of the InterMiCOM hardware OK = InterMiCOM hardware healthy, Read Error = InterMiCOM hardware failure, Write Error = InterMiCOM hardware failure, Card Not Fitted = InterMiCOM board is either not fitted or failed to initialise				
15	50	Loopback Mode	Disabled	Disabled / Internal / External
By selecting “Loopback Mode” to “Internal”, only the internal software of the device is checked whereas “External” will check both the software and hardware used by InterMiCOM (In the latter case, it is necessary to connect the transmit and receive pins together and ensure that the DCD signal is held high).				
15	51	Test Pattern	11111111	00000000 to 11111111 step 1
A test pattern can be entered which is then transmitted through the software and/or hardware.				
15	52	Loopback Status		OK / Fail / Card Not Fitted / Unavailable
Providing all connections are correct and the software is working correctly, the “Loopback Status” cell will display “OK”. An unsuccessful test would be indicated by “FAIL”, whereas a hardware error will be indicated by “UNAVAILABLE”.				

5.11 InterMiCOM Configuration

The “INTERMICOM CONF” column selects the format of each signal and its fallback operation mode.

InterMiCOM provides 8 commands over a single communications link, with the mode of operation of each command being individually selectable within the “IM# Cmd Type” cell (# = 1 to 8).

Col	Row	Menu Text	Default Setting	Available Setting
Description				
16	00	INTERMICOM CONF		

Col	Row	Menu Text	Default Setting	Available Setting
Description				
Note Setting choices are different from IM2 to IM8 (see IM1 Cmd type). When Cmd Type is enabled, Fallback Mode is enabled. Default values and frameSync type are settable when fallback mode selection is “latched”.				
16	01	IM Msg Alarm Lvl	25%	0% to 100% step 1%
The “IM ¨Msg Alam Lvl” sets the level of invalid messages received compared to the total number of messages that should have been received. If this value exceeds the selected level, an alarm will be raised.				
16	10	IM1 Cmd Type	Direct	Disabled/ Blocking/ Direct
“Blocking” mode provides the fastest signalling speed (available on commands 1 – 4), “Direct Intertrip” mode provides the most secure signalling (available on commands 1 – 8) and “Permissive” mode provides the most dependable signalling (available on commands 5 – 8). Each command can be disabled so that it has no effect in the logic of the device.				
16	11	IM1 FallBackMode	Default	Default/ Latched
Visible if “IM1 Cmd type” ≠ “Disabled” When “Latched”, during periods of extreme where the synchronization of a message structure is lost or is cannot be decoded, the last good command can be maintained until a new valid message is received. When “Default”: if the synchronisation is lost, after a time period, a known fallback state can be assigned to the command. In this latter case, the time period will need to be set in the “IM# FrameSynTim” cell and the default value will need to be set in “IM# DefaultValue” cell. As soon as a full valid message is seen by the device all the timer periods are reset and the new valid command states are used. An alarm is provided if the noise on the channel becomes excessive.				
16	12	IM1 DefaultValue	0	0 to 1 step 1
Visible if “IM1 Fallback Mode” = “Default” Sets the default value to assign to the command after a time period.				
16	13	IM1 FrameSyncTim	1500 ms	10 ms to 1500 ms step 10 ms
Visible if “IM1 Fallback Mode” = “Default” Sets the time period to assign the known default value to the device.				
16	18	IM2 Cmd Type	Direct	Disabled/ Blocking/ Direct
“Blocking” mode provides the fastest signalling speed (available on commands 1 – 4), “Direct Intertrip” mode provides the most secure signalling (available on commands 1 – 8) and “Permissive” mode provides the most dependable signalling (available on commands 5 – 8). Each command can be disabled so that it has no effect in the logic of the device.				
16	19	IM2 FallBackMode	Default	Default/ Latched
Visible if “IM2 Cmd type” ≠ “Disabled” When “Latched”, during periods of extreme where the synchronization of a message structure is lost or is cannot be decoded, the last good command can be maintained until a new valid message is received. When “Default”: if the synchronisation is lost, after a time period, a known fallback state can be assigned to the command. In this latter case, the time period will need to be set in the “IM# FrameSynTim” cell and the default value will need to be set in “IM# DefaultValue” cell. As soon as a full valid message is seen by the device all the timer periods are reset and the new valid command states are used. An alarm is provided if the noise on the channel becomes excessive.				
16	1A	IM2 DefaultValue	0	0 to 1 step 1
Visible if “IM2 Fallback Mode” = “Default” Sets the default value to assign to the command after a time period.				
16	1B	IM2 FrameSyncTim	1500 ms	10 ms to 1500 ms step 10 ms
Visible if “IM2 Fallback Mode” = “Default” Sets the time period to assign the known default value to the device.				
16	20	IM3 Cmd Type	Direct	Disabled/ Blocking/ Direct
“Blocking” mode provides the fastest signalling speed (available on commands 1 – 4), “Direct Intertrip” mode provides the most secure signalling (available on commands 1 – 8) and “Permissive” mode provides the most dependable signalling (available on commands 5 – 8). Each command can be disabled so that it has no effect in the logic of the device.				
16	21	IM3 FallBackMode	Default	Default/ Latched

Col	Row	Menu Text	Default Setting	Available Setting
Description				
Visible if “IM3 Cmd type” ≠ “Disabled” When “Latched”, during periods of extreme where the synchronization of a message structure is lost or is cannot be decoded, the last good command can be maintained until a new valid message is received. When “Default”: if the synchronisation is lost, after a time period, a known fallback state can be assigned to the command. In this latter case, the time period will need to be set in the “IM# FrameSynTim” cell and the default value will need to be set in “IM# DefaultValue” cell. As soon as a full valid message is seen by the device all the timer periods are reset and the new valid command states are used. An alarm is provided if the noise on the channel becomes excessive.				
16	22	IM3 DefaultValue	0	0 to 1 step 1
Visible if “IM3 Fallback Mode” = “Default” Sets the default value to assign to the command after a time period.				
16	23	IM3 FrameSyncTim	1500 ms	10 ms to 1500 ms step 10 ms
Visible if “IM3 Fallback Mode” = “Default” Sets the time period to assign the known default value to the device.				
16	28	IM4 Cmd Type	Direct	Disabled/ Blocking/ Direct
“Blocking” mode provides the fastest signalling speed (available on commands 1 – 4), “Direct Intertrip” mode provides the most secure signalling (available on commands 1 – 8) and “Permissive” mode provides the most dependable signalling (available on commands 5 – 8). Each command can be disabled so that it has no effect in the logic of the device.				
16	29	IM4 FallBackMode	Default	Default/ Latched
Visible if “IM4 Cmd type” ≠ “Disabled” When “Latched”, during periods of extreme where the synchronization of a message structure is lost or is cannot be decoded, the last good command can be maintained until a new valid message is received. When “Default”: if the synchronisation is lost, after a time period, a known fallback state can be assigned to the command. In this latter case, the time period will need to be set in the “IM# FrameSynTim” cell and the default value will need to be set in “IM# DefaultValue” cell. As soon as a full valid message is seen by the device all the timer periods are reset and the new valid command states are used. An alarm is provided if the noise on the channel becomes excessive.				
16	2A	IM4 DefaultValue	0	0 to 1 step 1
Visible if “IM4 Fallback Mode” = “Default” Sets the default value to assign to the command after a time period.				
16	2B	IM4 FrameSyncTim	1500 ms	10 ms to 1500 ms step 10 ms
Visible if “IM4 Fallback Mode” = “Default” Sets the time period to assign the known default value to the device.				
16	30	IM5 Cmd Type	Direct	Disabled/ Permissive/ Direct
“Blocking” mode provides the fastest signalling speed (available on commands 1 – 4), “Direct Intertrip” mode provides the most secure signalling (available on commands 1 – 8) and “Permissive” mode provides the most dependable signalling (available on commands 5 – 8). Each command can be disabled so that it has no effect in the logic of the device.				
16	31	IM5 FallBackMode	Default	Default/ Latched
Visible if “IM5 Cmd type” ≠ “Disabled” When “Latched”, during periods of extreme where the synchronization of a message structure is lost or is cannot be decoded, the last good command can be maintained until a new valid message is received. When “Default”: if the synchronisation is lost, after a time period, a known fallback state can be assigned to the command. In this latter case, the time period will need to be set in the “IM# FrameSynTim” cell and the default value will need to be set in “IM# DefaultValue” cell. As soon as a full valid message is seen by the device all the timer periods are reset and the new valid command states are used. An alarm is provided if the noise on the channel becomes excessive.				
16	32	IM5 DefaultValue	0	0 to 1 step 1
Visible if “IM5 Fallback Mode” = “Default” Sets the default value to assign to the command after a time period.				
16	33	IM5 FrameSyncTim	1500 ms	10 ms to 1500 ms step 10 ms
Visible if “IM5 Fallback Mode” = “Default” Sets the time period to assign the known default value to the device.				
16	38	IM6 Cmd Type	Direct	Disabled/ Permissive/ Direct

Col	Row	Menu Text	Default Setting	Available Setting
Description				
"Blocking" mode provides the fastest signalling speed (available on commands 1 – 4), "Direct Intertrip" mode provides the most secure signalling (available on commands 1 – 8) and "Permissive" mode provides the most dependable signalling (available on commands 5 – 8). Each command can be disabled so that it has no effect in the logic of the device.				
16	39	IM6 FallBackMode	Default	Default/ Latched
Visible if "IM6 Cmd type" ≠ "Disabled" When "Latched", during periods of extreme where the synchronization of a message structure is lost or is cannot be decoded, the last good command can be maintained until a new valid message is received. When "Default": if the synchronisation is lost, after a time period, a known fallback state can be assigned to the command. In this latter case, the time period will need to be set in the "IM# FrameSynTim" cell and the default value will need to be set in "IM# DefaultValue" cell. As soon as a full valid message is seen by the device all the timer periods are reset and the new valid command states are used. An alarm is provided if the noise on the channel becomes excessive.				
16	3A	IM6 DefaultValue	0	0 to 1 step 1
Visible if "IM6 Fallback Mode" = "Default" Sets the default value to assign to the command after a time period.				
16	3B	IM6 FrameSyncTim	1500 ms	10 ms to 1500 ms step 10 ms
Visible if "IM6 Fallback Mode" = "Default" Sets the time period to assign the known default value to the device.				
16	40	IM7 Cmd Type	Direct	Disabled/ Permissive/ Direct
"Blocking" mode provides the fastest signalling speed (available on commands 1 – 4), "Direct Intertrip" mode provides the most secure signalling (available on commands 1 – 8) and "Permissive" mode provides the most dependable signalling (available on commands 5 – 8). Each command can be disabled so that it has no effect in the logic of the device.				
16	41	IM7 FallBackMode	Default	Default/ Latched
Visible if "IM7 Cmd type" ≠ "Disabled" When "Latched", during periods of extreme where the synchronization of a message structure is lost or is cannot be decoded, the last good command can be maintained until a new valid message is received. When "Default": if the synchronisation is lost, after a time period, a known fallback state can be assigned to the command. In this latter case, the time period will need to be set in the "IM# FrameSynTim" cell and the default value will need to be set in "IM# DefaultValue" cell. As soon as a full valid message is seen by the device all the timer periods are reset and the new valid command states are used. An alarm is provided if the noise on the channel becomes excessive.				
16	42	IM7 DefaultValue	0	0 to 1 step 1
Visible if "IM7 Fallback Mode" = "Default" Sets the default value to assign to the command after a time period.				
16	43	IM7 FrameSyncTim	1500 ms	10 ms to 1500 ms step 10 ms
Visible if "IM7 Fallback Mode" = "Default" Sets the time period to assign the known default value to the device.				
16	48	IM8 Cmd Type	Direct	Disabled/ Permissive/ Direct
"Blocking" mode provides the fastest signalling speed (available on commands 1 – 4), "Direct Intertrip" mode provides the most secure signalling (available on commands 1 – 8) and "Permissive" mode provides the most dependable signalling (available on commands 5 – 8). Each command can be disabled so that it has no effect in the logic of the device.				
16	49	IM8 FallBackMode	Default	Default/ Latched
Visible if "IM8 Cmd type" ≠ "Disabled" When "Latched", during periods of extreme where the synchronization of a message structure is lost or is cannot be decoded, the last good command can be maintained until a new valid message is received. When "Default": if the synchronisation is lost, after a time period, a known fallback state can be assigned to the command. In this latter case, the time period will need to be set in the "IM# FrameSynTim" cell and the default value will need to be set in "IM# DefaultValue" cell. As soon as a full valid message is seen by the device all the timer periods are reset and the new valid command states are used. An alarm is provided if the noise on the channel becomes excessive.				
16	4A	IM8 DefaultValue	0	0 to 1 step 1
Visible if "IM8 Fallback Mode" = "Default" Sets the default value to assign to the command after a time period.				

Col	Row	Menu Text	Default Setting	Available Setting
Description				
16	4B	IM8 FrameSyncTim	1500 ms	10 ms to 1500 ms step 10 ms
Visible if “IM8 Fallback Mode” = “Default” Sets the time period to assign the known default value to the device.				

5.12 Function Keys

The lock setting allows a function key output that is set to toggle mode to be locked in its current active state. In toggle mode a single key press will set/latch the function key output as high or low in programmable scheme logic. This feature can be used to enable/disable relay functions. In the normal mode the function key output will remain high as long as the key is pressed. The Fn. Key label allows the text of the function key to be changed to something more suitable for the application.

The “Function keys” column is visible when the “Function key” setting (“Configuration” column) = “visible”.

Col	Row	Menu Text	Default Setting	Available Setting
Description				
17	00	FUNCTION KEYS		
17	01	Fn Key Status	0000000000	Data
Displays the status of each function key.				
17	02	Fn Key 1	Unlocked	Disabled, Locked, Unlock
Setting to activate function key. The ‘Lock’ setting allows a function key output that is set to toggle mode to be locked in its current active state.				
17	03	Fn Key 1 Mode	Toggled	Toggled, Normal
Sets the function key in toggle or normal mode. In ‘Toggle’ mode, a single key press will set/latch the function key output as ‘high’ or ‘low’ in programmable scheme logic. This feature can be used to enable/disable device functions. In the ‘Normal’ mode the function key output will remain ‘high’ as long as key is pressed.				
17	04	Fn Key 1 Label	Function Key 1	
Allows the text of the function key to be changed to something more suitable for the application.				
17	05	Fn Key 2	Unlocked	Disabled, Locked, Unlock
Setting to activate function key. The ‘Lock’ setting allows a function key output that is set to toggle mode to be locked in its current active state.				
17	06	Fn Key 2 Mode	Normal	Toggled, Normal
Sets the function key in toggle or normal mode. In ‘Toggle’ mode, a single key press will set/latch the function key output as ‘high’ or ‘low’ in programmable scheme logic. This feature can be used to enable/disable device functions. In the ‘Normal’ mode the function key output will remain ‘high’ as long as key is pressed.				
17	07	Fn Key 2 Label	Function Key 2	
Allows the text of the function key to be changed to something more suitable for the application.				
17	08	Fn Key 3	Unlocked	Disabled, Locked, Unlock
Setting to activate function key. The ‘Lock’ setting allows a function key output that is set to toggle mode to be locked in its current active state.				
17	09	Fn Key 3 Mode	Normal	Toggled, Normal
Sets the function key in toggle or normal mode. In ‘Toggle’ mode, a single key press will set/latch the function key output as ‘high’ or ‘low’ in programmable scheme logic. This feature can be used to enable/disable device functions. In the ‘Normal’ mode the function key output will remain ‘high’ as long as key is pressed.				
17	0A	Fn Key 3 Label	Function Key 3	

Col	Row	Menu Text	Default Setting	Available Setting
Description				
Allows the text of the function key to be changed to something more suitable for the application.				
17	0B	Fn Key 4	Unlocked	Disabled, Locked, Unlock
Setting to activate function key. The 'Lock' setting allows a function key output that is set to toggle mode to be locked in its current active state.				
17	0C	Fn Key 4 Mode	Normal	Toggled, Normal
Sets the function key in toggle or normal mode. In 'Toggle' mode, a single key press will set/latch the function key output as 'high' or 'low' in programmable scheme logic. This feature can be used to enable/disable device functions. In the 'Normal' mode the function key output will remain 'high' as long as key is pressed.				
17	0D	Fn Key 4 Label	Function Key 4	
Allows the text of the function key to be changed to something more suitable for the application.				
17	0E	Fn Key 5	Unlocked	Disabled, Locked, Unlock
Setting to activate function key. The 'Lock' setting allows a function key output that is set to toggle mode to be locked in its current active state.				
17	0F	Fn Key 5 Mode	Normal	Toggled, Normal
Sets the function key in toggle or normal mode. In 'Toggle' mode, a single key press will set/latch the function key output as 'high' or 'low' in programmable scheme logic. This feature can be used to enable/disable device functions. In the 'Normal' mode the function key output will remain 'high' as long as key is pressed.				
17	10	Fn Key 5 Label	Function Key 5	
Allows the text of the function key to be changed to something more suitable for the application.				
17	11	Fn Key 6	Unlocked	Disabled, Locked, Unlock
Setting to activate function key. The 'Lock' setting allows a function key output that is set to toggle mode to be locked in its current active state.				
17	12	Fn Key 6 Mode	Normal	Toggled, Normal
Sets the function key in toggle or normal mode. In 'Toggle' mode, a single key press will set/latch the function key output as 'high' or 'low' in programmable scheme logic. This feature can be used to enable/disable device functions. In the 'Normal' mode the function key output will remain 'high' as long as key is pressed.				
17	13	Fn Key 6 Label	Function Key 6	
Allows the text of the function key to be changed to something more suitable for the application.				
17	14	Fn Key 7	Unlocked	Disabled, Locked, Unlock
Setting to activate function key. The 'Lock' setting allows a function key output that is set to toggle mode to be locked in its current active state.				
17	15	Fn Key 7 Mode	Normal	Toggled, Normal
Sets the function key in toggle or normal mode. In 'Toggle' mode, a single key press will set/latch the function key output as 'high' or 'low' in programmable scheme logic. This feature can be used to enable/disable device functions. In the 'Normal' mode the function key output will remain 'high' as long as key is pressed.				
17	16	Fn Key 7 Label	Function Key 7	
Allows the text of the function key to be changed to something more suitable for the application.				
17	17	Fn Key 8	Unlocked	Disabled, Locked, Unlock
Setting to activate function key. The 'Lock' setting allows a function key output that is set to toggle mode to be locked in its current active state.				
17	18	Fn Key 8 Mode	Normal	Toggled, Normal
Sets the function key in toggle or normal mode. In 'Toggle' mode, a single key press will set/latch the function key output as 'high' or 'low' in programmable scheme logic. This feature can be used to enable/disable device functions. In the 'Normal' mode the function key output will remain 'high' as long as key is pressed.				
17	19	Fn Key 8 Label	Function Key 8	
Allows the text of the function key to be changed to something more suitable for the application.				
17	1A	Fn Key 9	Unlocked	Disabled, Locked, Unlock

Col	Row	Menu Text	Default Setting	Available Setting
Description				
Setting to activate function key. The 'Lock' setting allows a function key output that is set to toggle mode to be locked in its current active state.				
17	1B	Fn Key 9 Mode	Normal	Toggled, Normal
Sets the function key in toggle or normal mode. In 'Toggle' mode, a single key press will set/latch the function key output as 'high' or 'low' in programmable scheme logic. This feature can be used to enable/disable device functions. In the 'Normal' mode the function key output will remain 'high' as long as key is pressed.				
17	1C	Fn Key 9 Label	Function Key 9	
Allows the text of the function key to be changed to something more suitable for the application.				
17	1D	Fn Key 10	Unlocked	Disabled, Locked, Unlock
Setting to activate function key. The 'Lock' setting allows a function key output that is set to toggle mode to be locked in its current active state.				
17	1E	Fn Key 10 Mode	Normal	Toggled, Normal
Sets the function key in toggle or normal mode. In 'Toggle' mode, a single key press will set/latch the function key output as 'high' or 'low' in programmable scheme logic. This feature can be used to enable/disable device functions. In the 'Normal' mode the function key output will remain 'high' as long as key is pressed.				
17	1F	Fn Key 10 Label	Function Key 10	
Allows the text of the function key to be changed to something more suitable for the application.				

5.13 IED Configurator

The contents of the IED CONFIGURATOR column (for IEC 61850 configuration) are mostly data cells, displayed for information but not editable. To edit the configuration, you need to use the IED (Intelligent Electronic Device) configurator tool within the Schneider Electric MiCOM S1 Studio software.

Col	Row	Menu Text	Default Setting	Available Setting
Description				
19	00	IED CONFIGURATOR		
19	05	Switch Conf.Bank	No Action	No Action, Switch Banks
Setting which allows the user to switch between the current configuration, held in the Active Memory Bank (and partly displayed below), to the configuration sent to and held in the Inactive Memory Bank.				
19	0A	Restore Conf.	No Action	No action / Restore MCL
Used to restore data from Conf. binary file. Conf. files are specific, containing a single devices IEC61850 configuration information, and used for transferring data to/from the MiCOM IED.				
19	10	Active Conf.Name	Not Available	Data
The name of the configuration in the Active Memory Bank, usually taken from the SCL file.				
19	11	Active Conf.Rev	Not Available	Data
Configuration Revision number of the Active Memory Bank, used for version management.				
19	20	Inact.Conf.Name	Not Available	Data
The name of the configuration in the Inactive Memory Bank, usually taken from the SCL file.				
19	21	Inact.Conf.Rev	Not Available	Data
Configuration Revision number of the Inactive Memory Bank, used for version management.				
19	30	IP PARAMETERS		
19	31	IP address 1	0.0.0.0	Data

Col	Row	Menu Text	Default Setting	Available Setting
Description				
Displays the unique network IP address that identifies the device.				
19	32	Subnet mask 1	0.0.0.0	Data
Displays the sub-network that the device is connected to.				
19	33	Gateway 1	0.0.0.0	Data
Displays the IP address of the gateway (proxy) that the device is connected to.				
19	34	IP address 2	0.0.0.0	Data
Displays the unique network IP address that identifies the device.				
19	35	Subnet mask 2	0.0.0.0	Data
Displays the sub-network that the device is connected to.				
19	36	Gateway 2	0.0.0.0	Data
Displays the IP address of the gateway (proxy) that the device is connected to.				
19	40	SNTP PARAMETERS		
19	41	SNTP Server 1	0.0.0.0	Data
Displays the IP address of the primary SNTP server.				
19	42	SNTP Server 2	0.0.0.0	Data
Displays the IP address of the secondary SNTP server.				
19	50	IEC 61850 SCL		
19	51	IED Name	Not Available	Data
8 character IED name, which is the unique name on the IEC 61850 network for the IED, usually taken from the SCL (Substation Configuration Language for XML) file.				
19	60	IEC 61850 GOOSE		
19	70	GoEna	00000000	00000000 to 11111111 step 1
GoEna (GOose ENAble) is a setting to enable GOOSE (Generic Object Orientated Substation Event, for high-speed inter-device messaging) publisher settings. This setting enables (“1”) or disables (“0”) GOOSE control blocks from 08 (1st digit) to 01 (last digit).				
19	71	Pub.Simul.Goose	0X00000000	0 to 2 step 1
19	73	Sub.Simul.Goose	No	0 to 2 step 1

5.14 Control Input Labels

The “CTRL I/P Labels” column is visible when the “Control I/P Labels” setting (“Configuration” column) = “visible”.

Col	Row	Menu Text	Default Setting	Available Setting
Description				
29	00	CTRL I/P LABELS		
29	01	Control Input 1	Control Input 1	16 Character Text

Col	Row	Menu Text	Default Setting	Available Setting
Description				
Setting to change the text associated with each individual control input. This text will be displayed when a control input is accessed by the hotkey menu, or it can be displayed in the programmable scheme logic.				
29	02	Control Input 2	Control Input 2	16 Character Text
Setting to change the text associated with each individual control input. This text will be displayed when a control input is accessed by the hotkey menu, or it can be displayed in the programmable scheme logic.				
29	03	Control Input 3	Control Input 3	16 Character Text
Setting to change the text associated with each individual control input. This text will be displayed when a control input is accessed by the hotkey menu, or it can be displayed in the programmable scheme logic.				
29	04	Control Input 4	Control Input 4	16 Character Text
Setting to change the text associated with each individual control input. This text will be displayed when a control input is accessed by the hotkey menu, or it can be displayed in the programmable scheme logic.				
29	05	Control Input 5	Control Input 5	16 Character Text
Setting to change the text associated with each individual control input. This text will be displayed when a control input is accessed by the hotkey menu, or it can be displayed in the programmable scheme logic.				
29	06	Control Input 6	Control Input 6	16 Character Text
Setting to change the text associated with each individual control input. This text will be displayed when a control input is accessed by the hotkey menu, or it can be displayed in the programmable scheme logic.				
29	07	Control Input 7	Control Input 7	16 Character Text
Setting to change the text associated with each individual control input. This text will be displayed when a control input is accessed by the hotkey menu, or it can be displayed in the programmable scheme logic.				
29	08	Control Input 8	Control Input 8	16 Character Text
Setting to change the text associated with each individual control input. This text will be displayed when a control input is accessed by the hotkey menu, or it can be displayed in the programmable scheme logic.				
29	09	Control Input 9	Control Input 9	16 Character Text
Setting to change the text associated with each individual control input. This text will be displayed when a control input is accessed by the hotkey menu, or it can be displayed in the programmable scheme logic.				
29	0A	Control Input 10	Control Input 10	16 Character Text
Setting to change the text associated with each individual control input. This text will be displayed when a control input is accessed by the hotkey menu, or it can be displayed in the programmable scheme logic.				
29	0B	Control Input 11	Control Input 11	16 Character Text
Setting to change the text associated with each individual control input. This text will be displayed when a control input is accessed by the hotkey menu, or it can be displayed in the programmable scheme logic.				
29	0C	Control Input 12	Control Input 12	16 Character Text
Setting to change the text associated with each individual control input. This text will be displayed when a control input is accessed by the hotkey menu, or it can be displayed in the programmable scheme logic.				
29	0D	Control Input 13	Control Input 13	16 Character Text
Setting to change the text associated with each individual control input. This text will be displayed when a control input is accessed by the hotkey menu, or it can be displayed in the programmable scheme logic.				
29	0E	Control Input 14	Control Input 14	16 Character Text
Setting to change the text associated with each individual control input. This text will be displayed when a control input is accessed by the hotkey menu, or it can be displayed in the programmable scheme logic.				
29	0F	Control Input 15	Control Input 15	16 Character Text
Setting to change the text associated with each individual control input. This text will be displayed when a control input is accessed by the hotkey menu, or it can be displayed in the programmable scheme logic.				
29	10	Control Input 16	Control Input 16	16 Character Text
Setting to change the text associated with each individual control input. This text will be displayed when a control input is accessed by the hotkey menu, or it can be displayed in the programmable scheme logic.				
29	11	Control Input 17	Control Input 17	16 Character Text

Col	Row	Menu Text	Default Setting	Available Setting
Description				
Setting to change the text associated with each individual control input. This text will be displayed when a control input is accessed by the hotkey menu, or it can be displayed in the programmable scheme logic.				
29	12	Control Input 18	Control Input 18	16 Character Text
Setting to change the text associated with each individual control input. This text will be displayed when a control input is accessed by the hotkey menu, or it can be displayed in the programmable scheme logic.				
29	13	Control Input 19	Control Input 19	16 Character Text
Setting to change the text associated with each individual control input. This text will be displayed when a control input is accessed by the hotkey menu, or it can be displayed in the programmable scheme logic.				
29	14	Control Input 20	Control Input 20	16 Character Text
Setting to change the text associated with each individual control input. This text will be displayed when a control input is accessed by the hotkey menu, or it can be displayed in the programmable scheme logic.				
29	15	Control Input 21	Control Input 21	16 Character Text
Setting to change the text associated with each individual control input. This text will be displayed when a control input is accessed by the hotkey menu, or it can be displayed in the programmable scheme logic.				
29	16	Control Input 22	Control Input 22	16 Character Text
Setting to change the text associated with each individual control input. This text will be displayed when a control input is accessed by the hotkey menu, or it can be displayed in the programmable scheme logic.				
29	17	Control Input 23	Control Input 23	16 Character Text
Setting to change the text associated with each individual control input. This text will be displayed when a control input is accessed by the hotkey menu, or it can be displayed in the programmable scheme logic.				
29	18	Control Input 24	Control Input 24	16 Character Text
Setting to change the text associated with each individual control input. This text will be displayed when a control input is accessed by the hotkey menu, or it can be displayed in the programmable scheme logic.				
29	19	Control Input 25	Control Input 25	16 Character Text
Setting to change the text associated with each individual control input. This text will be displayed when a control input is accessed by the hotkey menu, or it can be displayed in the programmable scheme logic.				
29	1A	Control Input 26	Control Input 26	16 Character Text
Setting to change the text associated with each individual control input. This text will be displayed when a control input is accessed by the hotkey menu, or it can be displayed in the programmable scheme logic.				
29	1B	Control Input 27	Control Input 27	16 Character Text
Setting to change the text associated with each individual control input. This text will be displayed when a control input is accessed by the hotkey menu, or it can be displayed in the programmable scheme logic.				
29	1C	Control Input 28	Control Input 28	16 Character Text
Setting to change the text associated with each individual control input. This text will be displayed when a control input is accessed by the hotkey menu, or it can be displayed in the programmable scheme logic.				
29	1D	Control Input 29	Control Input 29	16 Character Text
Setting to change the text associated with each individual control input. This text will be displayed when a control input is accessed by the hotkey menu, or it can be displayed in the programmable scheme logic.				
29	1E	Control Input 30	Control Input 30	16 Character Text
Setting to change the text associated with each individual control input. This text will be displayed when a control input is accessed by the hotkey menu, or it can be displayed in the programmable scheme logic.				
29	1F	Control Input 31	Control Input 31	16 Character Text
Setting to change the text associated with each individual control input. This text will be displayed when a control input is accessed by the hotkey menu, or it can be displayed in the programmable scheme logic.				
29	20	Control Input 32	Control Input 32	16 Character Text
Setting to change the text associated with each individual control input. This text will be displayed when a control input is accessed by the hotkey menu, or it can be displayed in the programmable scheme logic.				

Notes:

OPERATION

CHAPTER 5

Date:	08/2015
Products covered by this chapter:	This chapter covers the specific versions of the MiCOM products listed below. This includes ***only*** the following combinations of Software Version and Hardware Suffix.
Hardware Suffix:	M
Software Version:	B0
Connection Diagrams:	10P849xx (xx = 01 to 06)

CONTENTS

FIGURES

TABLES

1 OPERATION OF FUNCTIONS

1.1 Programmable Scheme Logic

1.1.1 Level Settings

Name	Range	Step Size
Time delay t	0-14400000ms	1ms

Table 1 - Time delay settings

1.1.2 Accuracy

Output conditioner timer	Setting ±2% or 50ms whichever is greater
Dwell conditioner timer	Setting ±2% or 50ms whichever is greater
Pulse conditioner timer	Setting ±2% or 50ms whichever is greater

Table 2 - Accuracy timings

1.2 IRIG-B Signal Only

If a satellite time clock signal conforming to IRIG-B is provided and the relay has the optional IRIG-B port fitted, the satellite clock equipment should be energised.

In the event of the auxiliary supply failing, with a battery fitted in the compartment behind the bottom access cover, the time and date will be maintained. Therefore, when the auxiliary supply is restored, the time and date will be correct and not need to be set again.

1.3 Trip LED Logic

The trip LED can be reset when the flags for the last fault are displayed or via dedicated DDBs. The flags are displayed automatically after a trip occurs, or can be selected in the fault record menu. The reset of trip LED and the fault records is performed by pressing the ⓒ key once the fault record has been read.

1.4 Function Keys

The relay offers users 10 function keys for programming any operator control functionality via PSL. Each function key has an associated programmable tri-colour LED that can be programmed to give the desired indication on function key activation.

These function keys can be used to trigger any function that they are connected to as part of the PSL. The function key commands can be found in the 'Function Keys' menu (see the Settings chapter). In the 'Fn. Key Status' menu cell there is a 10-bit word which represent the 10 function key commands and their status can be read from this 10-bit word.

In the programmable scheme logic editor 10 function key signals, which can be set to a logic 1 or On state, as described above, are available to perform control functions defined by the user.

The "Function Keys" column has 'Fn. Key n Mode' cell which allows the user to configure the function key as either 'Toggled' or 'Normal'. In the 'Toggle' mode the function key DDB signal output will remain in the set state until a reset command is given, by activating the function key on the next key press. In the 'Normal' mode, the function key DDB signal will remain energized for as long as the function key is pressed and will then reset automatically.

A minimum pulse duration can be programmed for a function key by adding a minimum pulse timer to the function key DDB output signal.

The "Fn. Key n Status" cell is used to enable/unlock or disable the function key signals in PSL. The 'Lock' setting has been specifically provided to allow the locking of a function key thus preventing further activation of the key on consequent key presses. This allows function keys that are set to 'Toggled' mode and their DDB signal active 'high', to be locked in their active state thus preventing any further key presses from deactivating the associated function. Locking a function key that is set to the "Normal" mode causes the associated DDB signals to be permanently off. This safety feature prevents any inadvertent function key presses from activating or deactivating critical relay functions.

The "Fn. Key Labels" cell makes it possible to change the text associated with each individual function key. This text will be displayed when a function key is accessed in the function key menu, or it can be displayed in the PSL.

The status of the function keys is stored in battery backed memory. In the event that the auxiliary supply is interrupted the status of all the function keys will be recorded. Following the restoration of the auxiliary supply the status of the function keys, prior to supply failure, will be reinstated. If the battery is missing or flat the function key DDB signals will set to logic 0 once the auxiliary supply is restored.

Note	*The relay will only recognize a single function key press at a time and that a minimum key press duration of approximately 200msec. is required before the key press is recognized in PSL. This deglitching feature avoids accidental double presses.*

1.5 Setting Groups Selection

The setting groups can be changed either via opto inputs, via a menu selection, via the hotkey menu or via function keys. In the Configuration column if 'Setting Group - select via optos' is selected then any opto input or function key can be programmed in PSL to select the setting group as shown in the table below. If 'Setting Group - select via menu' is selected then in the Configuration column the 'Active Settings - Group1/2/3/4' can be used to select the setting group.

The setting group can be changed via the hotkey menu providing 'Setting Group select via menu' is chosen.

Two DDB signals are available in PSL for selecting a setting group via an opto input or function key selection. The following table illustrates the setting group that is active on activation of the relevant DDB signals.

DDB 1122 'SG Select x1'	DDB 1123 'SG Select 1x'	Selected setting group
0	0	1
1	0	2
0	1	3
1	1	4

Table 3 - Setting group active on activation of DDB signals

1.6 Control Inputs

The control inputs function as software switches that can be set or reset either locally or remotely. These inputs can be used to trigger any function that they are connected to as part of the PSL. There are three setting columns associated with the control inputs that are: "CONTROL INPUTS", "CTRL. I/P CONFIG." and "CTRL. I/P LABELS". The function of these columns is described below:

Menu Text	Default Setting	Setting Range	Step Size
CONTROL INPUTS			
Ctrl I/P Status	00000000000000000000000000000000		
Control Input 1	No Operation	No Operation, Set, Reset	
Control Input 2 to 32	No Operation	No Operation, Set, Reset	

Table 4 - Control inputs

The Control Input commands can be found in the 'Control Input' menu. In the 'Ctrl. I/P status' menu cell there is a 32 bit word which represent the 32 control input commands. The status of the 32 control inputs can be read from this 32-bit word. The 32 control inputs can also be set and reset from this cell by setting a 1 to set or 0 to reset a particular control input. Alternatively, each of the 32 Control Inputs can be set and reset using the individual menu setting cells 'Control Input 1, 2, 3' etc. The Control Inputs are available through the relay menu as described above and also via the rear communications.

In the programmable scheme logic editor 32 Control Input signals, DDB 800 – 831, which can be set to a logic 1 or On state, as described above, are available to perform control functions defined by the user.

Menu Text	Default Setting	Setting Range	Step Size
CTRL. I/P CONFIG.			
Hotkey Enabled	11111111111111111111111111111111		
Control Input 1	Latched	Latched, Pulsed	
Ctrl Command 1	SET/RESET	SET/RESET, IN/OUT, ENABLED/DISABLED, ON/OFF	
Control Input 2 to 32	Latched	Latched, Pulsed	
Ctrl Command 2 to 32	SET/RESET	SET/RESET, IN/OUT, ENABLED/DISABLED, ON/OFF	
Menu Text	Default Setting	Setting Range	Step Size
CTRL. I/P LABELS			
Control Input 1	Control Input 1	16 character text	
Control Input 2 to 32	Control Input 2 to 32	16 character text	

Table 5 – CTRL. I/P Config

The “CTRL. I/P CONFIG.” column has several functions one of which allows the user to configure the control inputs as either ‘latched’ or ‘pulsed’. A latched control input will remain in the set state until a reset command is given, either by the menu or the serial communications. A pulsed control input, however, will remain energized for 10ms after the set command is given and will then reset automatically (i.e. no reset command required).

In addition to the latched/pulsed option this column also allows the control inputs to be individually assigned to the “Hotkey” menu by setting ‘1’ in the appropriate bit in the “Hotkey Enabled” cell. The hotkey menu allows the control inputs to be set, reset or pulsed without the need to enter the “CONTROL INPUTS” column. The “Ctrl. Command” cell also allows the SET/RESET text, displayed in the hotkey menu, to be changed to something more suitable for the application of an individual control input, such as “ON/OFF”, “IN/OUT” etc.

The “CTRL. I/P LABELS” column makes it possible to change the text associated with each individual control input. This text will be displayed when a control input is accessed by the hotkey menu, or it can be displayed in the PSL.

Note	*With the exception of pulsed operation, the status of the control inputs is stored in battery backed memory. In the event that the auxiliary supply is interrupted the status of all the inputs will be recorded. Following the restoration of the auxiliary supply the status of the control inputs, prior to supply failure, will be reinstated. If the battery is missing or flat the control inputs will set to logic 0 once the auxiliary supply is restored.*

1.7 Real Time Clock Synchronization via Opto-Inputs

In modern protective schemes it is often desirable to synchronize the relays real time clock so that events from different relays can be placed in chronological order. This can be done using the IRIG-B input, if fitted, or via the communication interface connected to the substation control system. In addition to these methods the Px4x range offers the facility to synchronize via an opto-input by routing it in PSL to DDB 1131 ('Time Sync.'). Pulsing this input will result in the real time clock snapping to the nearest minute. The recommended pulse duration is 20ms to be repeated no more than once per minute. An example of the time sync. function is shown.

Time of “Sync. Pulse”	Corrected time
19:47:00 to 19:47:29	19:47:00
19:47:30 to 19:47:59	19:48:00

Table 6 – Time of Sync and Corrected Time

Note	*The above assumes a time format of hh:mm:ss*

To avoid the event buffer from being filled with unnecessary time sync. events, it is possible to ignore any event that generated by the time sync. opto input. This can be done by applying the following settings:

Menu text	Value
RECORD CONTROL	
Opto Input Event	Enabled
DDB 63 – 32 (Opto Inputs)	Set “Time Sync.” associated opto to 0

Table 7 – Record Control

To improve the recognition time of the time sync. opto input by approximately 10 ms, the opto input filtering could be disabled. This is achieved by setting the appropriate bit to 0 in the **Opto Filter Cntl** cell in the **OPTO CONFIG** column.

Disabling the filtering may make the opto input more susceptible to induced noise. Fortunately the effects of induced noise can be minimized by using the methods described in the *Product Design* chapter.

1.8 Enhanced Opto Time Stamping

Each opto-input sample are time stamped with respect to the relay’s Real Time Clock. These time stamps are utilized for the opto event logs and for the Precise event recorder. The relay needs to be synchronized accurately to an external clock source such as the GPS clock and the synchronization shall consist of IRIG-B and SNTP through Ethernet communication.

For both the filtered and unfiltered opto inputs, the time stamp of an opto change event is the sampling time at which the opto change of state has occurred. If a mixture of filtered and unfiltered optos changes state at the same sampling interval, these state changes is reported as a single event. The enhanced opto event time stamping is consistent across all the implemented protocols. The GOOSE messages is published in a timely manner and is not delayed by any event filtering mechanisms that is used to align the event time stamps.

1.9 InterMiCOM Teleprotection

InterMiCOM is a protection signalling system that is an optional feature of MiCOM Px40 relays and provides a cost-effective alternative to discrete carrier equipment. InterMiCOM sends eight signals between the two relays in the scheme, with each signal having a selectable operation mode to provide an optimal combination of speed, security and dependability in accordance with the application. Once the information is received, it may be assigned in the Programmable Scheme Logic to any function as specified by the user's application.

1.9.1 Protection Signalling

In order to achieve fast fault clearance and correct discrimination for faults anywhere within a high voltage power network, it is necessary to signal between the points at which protection relays are connected. Two distinct types of protection signalling can be identified:

1.9.1.1 Communications Media

Note	*The MiCOM P849 devices only use electrical connections (EIA(RS)232, port SK5)*

InterMiCOM can transfer up to 8 commands over one communication channel. Due to recent expansions in communication networks, most signaling channels are now digital schemes usinf multiplexed fiber optics. For this reason, InterMiCOM provides a standard EIA(RS)232 output using digital signaling techniques. This digital signal can be converted using suitable devices to any communications media as required. The EIA(RS)232 output may alternatively be connected to a MODEM link.

Regardless of whether analogue or digital systems are being used, all the requirements of teleprotection commands are governed by an international standard IEC60834-1:1999 and InterMiCOM is compliant with the essential requirements of this standard. This standard governs the speed requirements of the commands as well as the probability of unwanted commands being received (security) and the probability of missing commands (dependability).

1.9.1.2 General Features and Implementation

InterMiCOM provides 8 commands over a single communications link, with the mode of operation of each command being individually selectable within the "**IM# Cmd Type**" cell. "**Blocking**" mode provides the fastest signaling speed (available on commands 1 - 4), "**Direct Intertrip**" mode provides the most secure signaling (available on commands 1 - 8) and "**Permissive**" mode provides the most dependable signaling (available on commands 5 - 8). Each command can also be disabled so that it has no effect in the logic of the relay.

Since many applications will involve the commands being sent over a multiplexed communications channel, it is necessary to ensure that only data from the correct relay is used. Both relays in the scheme must be programmed with a unique pair of addresses that correspond with each other in the "**Source Address**" and "**Receive Address**" cells. For example, at the local end relay if we set the "**Source Address**" to 1, the "**Receive Address**" at the remote end relay must also be set to 1. Similarly, if the remote end relay has a "**Source Address**" set to 2, the "**Receive Address**" at the local end must also be set to 2. All four addresses must not be set identical in any given relay scheme if the possibility of incorrect signaling is to be avoided.

It must be ensured that the presence of noise in the communications channel isn't interpreted as valid messages by the relay. For this reason, InterMiCOM uses a combination of unique pair addressing described above, basic signal format checking and for "**Direct Intertrip**" commands an 8-bit Cyclic Redundancy Check (CRC) is also performed. This CRC calculation is performed at both the sending and receiving end relay for each message and then compared in order to maximize the security of the "**Direct Intertrip**" commands.

Most of the time the communications will perform adequately and the presence of the various checking algorithms in the message structure will ensure that InterMiCOM signals are processed correctly. However, careful consideration is also required for the periods of extreme noise pollution or the unlikely situation of total communications failure and how the relay should react.
During periods of extreme noise, it is possible that the synchronization of the message structure will be lost and it may become impossible to decode the full message accurately. During this noisy period, the last good command can be maintained until a new valid message is received by setting the "**IM# FallBackMode**" cell to "**Latched**". Alternatively, if the synchronization is lost for a period of time, a known fallback state can be assigned to the command by setting the "**IM# FallBackMode**" cell to "**Default**". In this latter case, the time period will need to be set in the "**IM# FrameSynTim**" cell and the default value will need to be set in "**IM# DefaultValue**" cell. As soon as a full valid message is seen by the relay all the timer periods are reset and the new valid command states are used. An alarm is provided if the noise on the channel becomes excessive.

When there is a total communications failure, the relay will use the fallback (failsafe) strategy as described above. Total failure of the channel is considered when no message data is received for four power system cycles or if there is a loss of the DCD line.

1.9.1.3 Physical Connections

InterMiCOM on the Px40 relays is implemented using a 9-pin '**D**' type female connector (labeled SK5) located at the bottom of the 2nd Rear communication board. This connector on the Px40 relay is wired in DTE (Data Terminating Equipment) mode, as shown in the *EIA(RS)232 Physical Connections* table:

Pin	Acronym	InterMiCOM Usage
1	DCD	“Data Carrier Detect” is only used when connecting to modems otherwise this should be tied high by connecting to terminal 4.
2	RxD	“Receive Data”
3	TxD	“Transmit Data”
4	DTR	“Data Terminal Ready” is permanently tied high by the hardware since InterMiCOM requires a permanently open communication channel.
5	GND	“Signal Ground”
6	Not used	-
7	RTS	“Ready To Send” is permanently tied high by the hardware since InterMiCOM requires a permanently open communication channel.
8	Not used	-
9	Not used	-

Table 8 - InterMICOM D9 port pin-out connections

Depending upon whether a direct or modem connection between the two relays in the scheme is being used, the required pin connections are described below.

1.9.1.4 Direct Connection

The EIA(RS)232 protocol only allows for short transmission distances due to the signalling levels used and therefore the connection shown below is limited to less than 15m. However, this may be extended by introducing suitable EIA(RS)232 to fiber optic convertors, such as the CILI 204. Depending upon the type of convertor and fiber used, direct communication over a few kilometres can easily be achieved.

This type of connection should also be used when connecting to multiplexers that have no ability to control the DCD line.

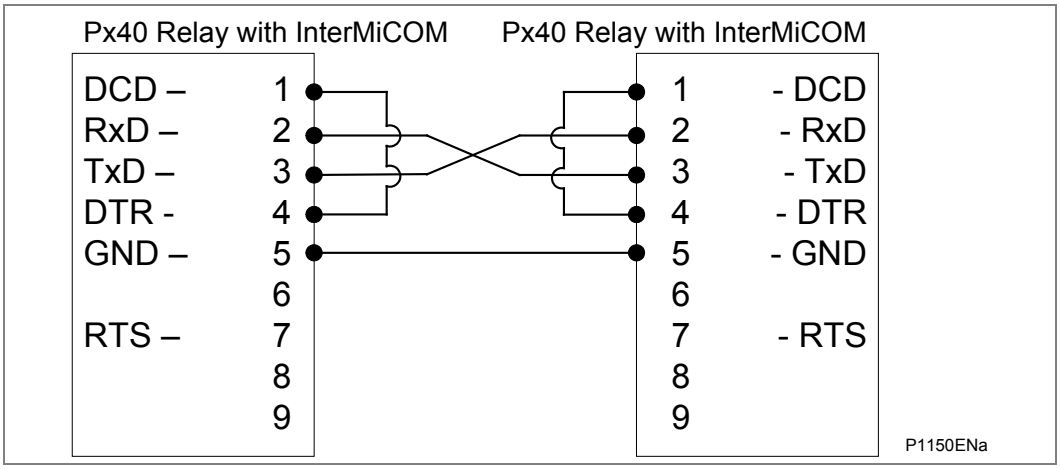

Figure 1 - Direct connection within the local substation

1.9.1.5 Modem Connection

For long distance communication, modems may be used in which the case the following connections should be made.

This type of connection should also be used when connecting to multiplexers that have the ability to control the DCD line. With this type of connection it should be noted that the maximum distance between the Px40 relay and the modem should be 15m, and that a baud rate suitable for the communications path used should be selected.

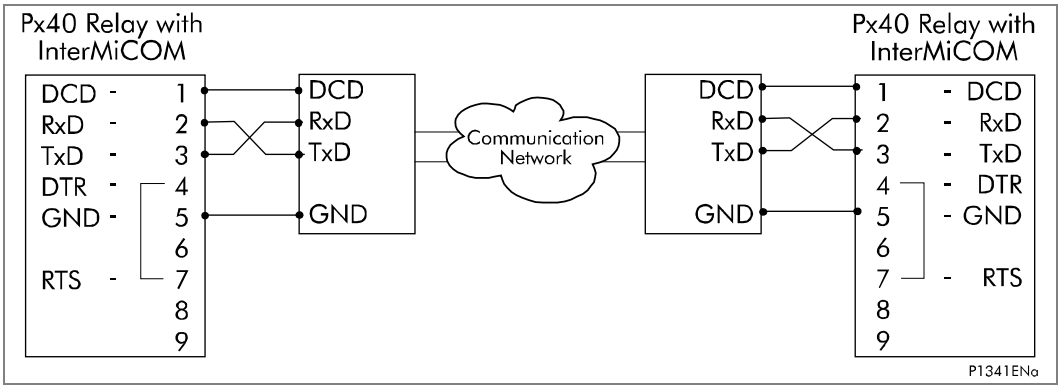

Figure 2 - InterMICOM teleprotection via a MODEM link

1.9.2 Functional Assignment

Even though settings are made on the relay to control the mode of the intertrip signals, it is necessary to assign interMiCOM input and output signals in the relay Programmable Scheme Logic (PSL) if InterMiCOM is to be successfully implemented.

It should be noted that when an InterMiCOM signal is sent from the local relay, only the remote end relay will react to this command. The local end relay will only react to InterMiCOM commands initiated at the remote end. InterMiCOM is thus suitable for teleprotection schemes requiring Duplex signaling.

1.9.3 InterMiCOM Settings

The settings necessary for the implementation of InterMiCOM are contained within two columns of the relay menu structure. The first column entitled “INTERMICOM COMMS” contains all the information to configure the communication channel and also contains the channel statistics and diagnostic facilities. The second column entitled “INTERMICOM CONF” selects the format of each signal and its fallback operation mode. The following tables show the relay menus including the available setting ranges and factory defaults.

Once the relay operation has been confirmed using the loopback test facilities, it will be necessary to ensure that the communications between the two relays in the scheme are reliable. To facilitate this, a list of channel statistics and diagnostics are available in the InterMiCOM COMMS column:

1.9.3.1 Setting Guidelines

The settings required for the InterMiCOM signalling are largely dependant upon whether a direct or indirect (modem/multiplexed) connection between the scheme ends is used.

Direct connections will either be short metallic or dedicated fiber optic (using CILI204) based and hence can be set to have the highest signalling speed of 19200b/s. Due to this high signalling rate, the difference in operating speed between the direct, permissive and blocking type signals is so small that the most secure signalling (direct intertrip) can be selected without any significant loss of speed. In turn, since the direct intertrip signalling requires the full checking of the message frame structure and CRC checks, it would seem prudent that the “IM# Fallback Mode” be set to “Default” with a minimal intentional delay by setting “IM# FrameSyncTim” to 10msecs. In other words, whenever two consecutive messages have an invalid structure, the relay will immediately revert to the default value until a new valid message is received.

For indirect connections, the settings that should be applied will become more application and communication media dependent. As for the direct connections, it may be appealing to consider only the fastest baud rate but this will usually increase the cost of the necessary modem/multiplexer.

In addition, devices operating at these high baud rates may suffer from “data jams” during periods of interference and in the event of communication interruptions, may require longer re-synchronization periods.

Both of these factors will reduce the effective communication speed thereby leading to a recommended baud rate setting of 9600b/s. It should be noted that as the baud rate decreases, the communications become more robust with fewer interruptions, but that overall signalling times will increase.

Since it is likely that slower baud rates will be selected, the choice of signalling mode becomes significant. However, once the signalling mode has been chosen it is necessary to consider what should happen during periods of noise when message structure and content can be lost.

If “Blocking” mode is selected, only a small amount of the total message is actually used to provide the signal, which means that in a noisy environment there is still a good likelihood of receiving a valid message. In this case, it is recommended that the “IM# Fallback Mode” is set to “Default” with a reasonably long “IM# FrameSyncTim”.

If “Direct Intertrip” mode is selected, the whole message structure must be valid and checked to provide the signal, which means that in a very noisy environment the chances of receiving a valid message are quite small. In this case, it is recommended that the “IM# Fallback Mode” is set to “Default” with a minimum “IM# FrameSyncTim” setting i.e. whenever a non-valid message is received, InterMiCOM will use the set default value.

If “Permissive” mode is selected, the chances of receiving a valid message is between that of the “Blocking” and “Direct Intertrip” modes. In this case, it is possible that the “IM# Fallback Mode” is set to “Latched”. The table below highlights the recommended “IM# FrameSyncTim” settings for the different signalling modes and baud rates:

Baud Rate	Minimum Recommended "IM# FrameSyncTim" Setting		Minimum Setting	Maximum Setting
	Direct Intertrip Mode	Blocking Mode		
600	100	250	100	1500
1200	50	130	50	1500
2400	30	70	30	1500
4800	20	40	20	1500
9600	10	20	10	1500
19200	10	10	10	1500

Table 9 - Recommended Frame Synchronism Time settings

Note	*No recommended setting is given for the Permissive mode since it is anticipated that "Latched" operation will be selected. However, if "Default mode" is selected, the "IM# FrameSyncTim" setting should be set greater than the minimum settings listed above. If the "IM# FrameSyncTim" setting is set lower than the minimum setting listed above, there is a danger that the relay will monitor a correct change in message as a corrupted message. A setting of 25% is recommended for the communications failure alarm.*

1.9.3.2 InterMiCOM Statistics & Diagnostics

It is possible to hide the channel diagnostics and statistics from view by setting the "**Ch Statistics**" and/or "**Ch Diagnostics**" cells to "**Invisible**". All channel statistics are reset when the relay is powered up, or by user selection using the "**Reset Statistics**" cell.

1.9.4 Testing InterMiCOM

1.9.4.1 InterMiCOM Loopback Testing & Diagnostics

A number of features are included within the InterMiCOM function to assist a user in commissioning and diagnosing any problems that may exist in the communications link.

"Loopback" test facilities, located within the INTERMICOM COMMS column of the relay menu, provide a user with the ability to check the software and hardware of the InterMiCOM signalling.

By selecting "Loopback Mode" to "Internal", only the internal software of the relay is checked whereas "External" will check both the software and hardware used by InterMiCOM. In the latter case, it is necessary to connect the transmit and receive pins together (pins 2 and 3) and ensure that the DCD signal is held high (connect pin 1 and pin 4 together). When the relay is switched into "Loopback Mode" the relay will automatically use generic addresses and will inhibit the InterMiCOM messages to the PSL by setting all eight InterMiCOM message states to zero. The loopback mode will be indicated on the relay frontplate by the amber Alarm LED being illuminated and a LCD alarm message, "IM Loopback".

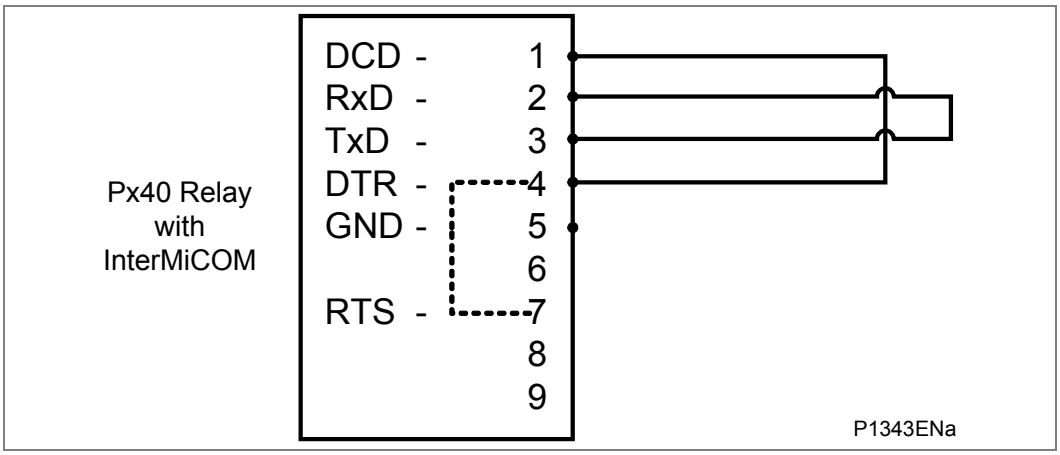

Figure 3 - Connections for External Loopback mode

Once the relay is switched into either of the Loopback modes, a test pattern can be entered in the “Test Pattern” cell which is then transmitted through the software and/or hardware. Providing all connections are correct and the software is working correctly, the “Loopback Status” cell will display “OK”. An unsuccessful test would be indicated by “FAIL”, whereas a hardware error will be indicated by “UNAVAILABLE”. Whilst the relay is in loopback test mode, the “IM Output Status” cell will only show the “Test Pattern” settings, whilst the “IM Input Status” cell will indicate that all inputs to the PSL have been forced to zero.

Care should be taken to ensure that once the loopback testing is complete, the “Loopback Mode” is set to “Disabled” thereby switching the InterMiCOM channel back in to service. With the loopback mode disabled, the “IM Output Status” cell will show the InterMiCOM messages being sent from the local relay, whilst the “IM Input Status” cell will show the received InterMiCOM messages (received from the remote end relay) being used by the PSL.

Once the relay operation has been confirmed using the loopback test facilities, it will be necessary to ensure that the communications between the two relays in the scheme are reliable. To facilitate this, a list of channel statistics and diagnostics are available in the InterMiCOM COMMS column – see section 10.2. It is possible to hide the channel diagnostics and statistics from view by setting the “Ch Statistics” and/or “Ch Diagnostics” cells to “Invisible”. All channel statistics are reset when the relay is powered up, or by user selection using the “Reset Statistics” cell.

Another indication of the amount of noise on the channel is provided by the communications failure alarm. Within a fixed 1.6 second time period the relay calculates the percentage of invalid messages received compared to the total number of messages that should have been received based upon the “Baud Rate” setting. If this percentage falls below the threshold set in the “IM Msg Alarm Lvl” cell, a “Message Fail” alarm will be raised.

1.10 Read Only Mode

With IEC 61850 and Ethernet / Internet communication capabilities, security has become a pressing issue. The Px40 relay provides a facility to allow the user to enable or disable the change in configuration remotely. This feature is available only in relays with Courier, Courier with IEC 60870-5-103, Courier with IEC 61850 and Courier with IEC 60870-5-103 and IEC 61850 protocol options. It has to be noted that in IEC 60870-5-103 protocol, Read Only Mode function is different from the existing Command block feature.

1.10.1 Protocol/Port Implementation

1.10.1.1 IEC 60870-5-103 Protocol on Rear Port 1

The protocol does not support settings but the indications, measurands and disturbance records commands are available at the interface.

Allowed:

Poll Class 1 (read spontaneous events)
Poll Class 2 (read measurands)
GI sequence (ASDU7 'Start GI', Poll Class 1)
Transmission of Disturbance Records sequence (ASDU24, ASDU25, Poll Class 1)
Time Synchronization (ASDU6)
General Commands (ASDU20), namely:
- INF23 activate characteristic 1
- INF24 activate characteristic 2
- INF25 activate characteristic 3
- INF26 activate characteristic 4

Blocked:

Write parameter (=change setting) (private ASDUs)
General Commands (ASDU20), namely:
- INF16 auto-recloser on/off
- INF19 LED reset
- Private INFs (e.g CB open/close, Control Inputs)

1.10.1.2 Courier Protocol on Rear Port 1/2 and Ethernet

Allowed:

- Read settings, statuses, measurands
- Read records (event, fault, disturbance)
- Time Synchronization command
- Change active setting group command

Blocked:

Write settings
All controls, including:
- Reset Indication (Trip LED)
- Operate Control Inputs
- CB operations
- Auto-reclose operations
- Reset demands
- Clear event / fault / maintenance / disturbance records
- Test LEDs & contacts

1.10.1.3 IEC 61850

Allowed:

- Read statuses, measurands
- Generate Reports
- Extract Disturbance Records
- Time Synchronization
- Change active setting group

Blocked:

All controls, including:
- Operate Control Inputs
- Reset LEDs

1.10.2 Courier Database Support

Three new settings, one for each remote communications port at the back of the relay are created to support the enabling and disabling of the read only mode at each port.

The **NIC Read Only** setting will apply to all the communications protocols (including the Tunnelled Courier) that are transmitted via the Ethernet Port. Their default values are ‘Disabled’.

The Modbus and DNP3 communications interfaces that do not support the feature will ignore these settings.

The remote read only mode is also available in the PSL via three dedicated DDB signals:

- RP1 Read Only
- RP2 Read Only
- NIC Read Only

Through careful scheme logic design, the activations of these read only signals can be facilitated via Opto Inputs, Control Inputs and Function Keys.

These DDBs are available in every build, however they are effective only in Courier, IEC 60870-5-103 build and in latest IEC 61850. The setting cells are not available in Modbus and DNP3.0.

2 OPERATION OF RECORDING FACILITIES

The MiCOM P849 contains the following recording facilities:

- Real time clock for time synchronization
- Standard and precise event recording facilities.

2.1 Real Time Clock, Time Synchronization

The MiCOM P849 provides real time clock and time synchronisation.

The time synchronisation is available through:

- IRIG-B port,
- Serial communication port,
- Ethernet port,
- Opto (opto time synchr)

Time synchronization uses Courier, Modbus, IEC60850-5-103, DNP3 or IEC61850 protocols.

Publishing GOOSE does not contain time stamp. Events are time stamped at reception at the other end (for example when it is received by P746).

2.2 Standard Event Recording Facilities

A sequence of time-tagged events is available. The product provides up to 512 non-volatile event records.

The following list items are stored as events:

- Recognition of change of state of logic (optically isolated) inputs,
- Recognition of change of state of output relays,
- Alarms,
- Maintenance records,
- Settings changes (local and remote).

2.3 Precise Event Recording

The product stores precise events in non-volatile memory. Each precise event recording contains 32 digital data channels.

Notes:

APPLICATION NOTES

CHAPTER 6

Date:	08/2015
Products covered by this chapter:	This chapter covers the specific versions of the MiCOM products listed below. This includes ***only*** the following combinations of Software Version and Hardware Suffix.
Hardware Suffix:	M
Software Version:	B0
Connection Diagrams:	10P849xx (xx = 01 to 06)

CONTENTS

TABLES

FIGURES

Notes:

1 APPLICATION OF THE MICOM P849 DEVICE

Warning **Before carrying out any work on the equipment, you should be familiar with the contents of the Safety Information chapter/safety guide SFTY/4LM/C11 or later issue, the Technical Data chapter and the ratings on the equipment rating label.**

MiCOM P849 Input & Output Extension device combines solutions to provide 'Protection Application' (section 1.1) and 'Control Application' (section 1.2) with the standard benefits of the MiCOM Px40 platform.

This section describes how MiCOM P849 can be used within 'Protection application' and 'Control Application'

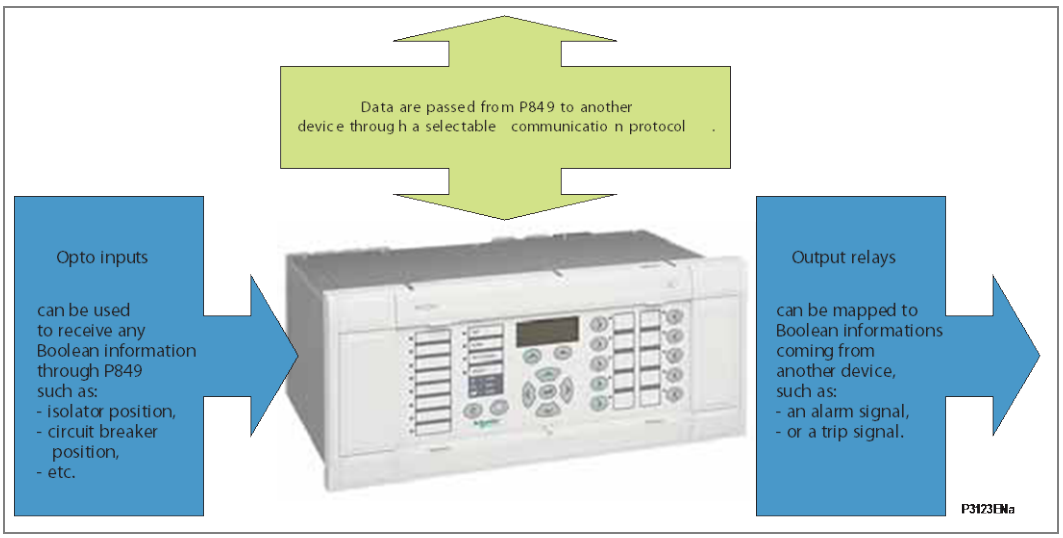

Figure 1 – P849 opto inputs and outputs

1.1 Protection Application

1.1.1 Definition

The protection application is characterised by the ability of the device to communicate IEC61850-8.1 over either a single Ethernet network or a redundant Ethernet network.

The MiCOM P849 enable to extend the number of IO of any device at all voltage levels (from MV up to HV transmission), regardless of manufacturer (IEC61850 communication through GOOSEs and Reports).

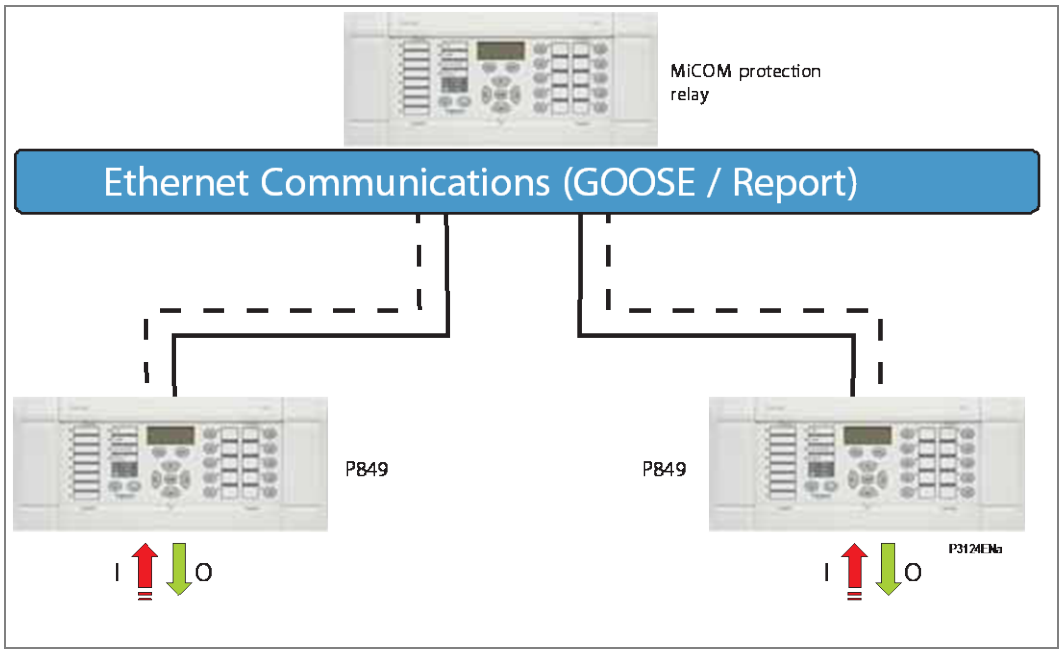

Figure 2 – P849 Ethernet communications

1.1.2 MiCOM P746 and P849 Use Cases

P849 is an opportunity to increase the number of inputs and outputs of MiCOM P746 in one box mode as well as in three box mode.

1.1.2.1 P746 One Box and P849 Use Case

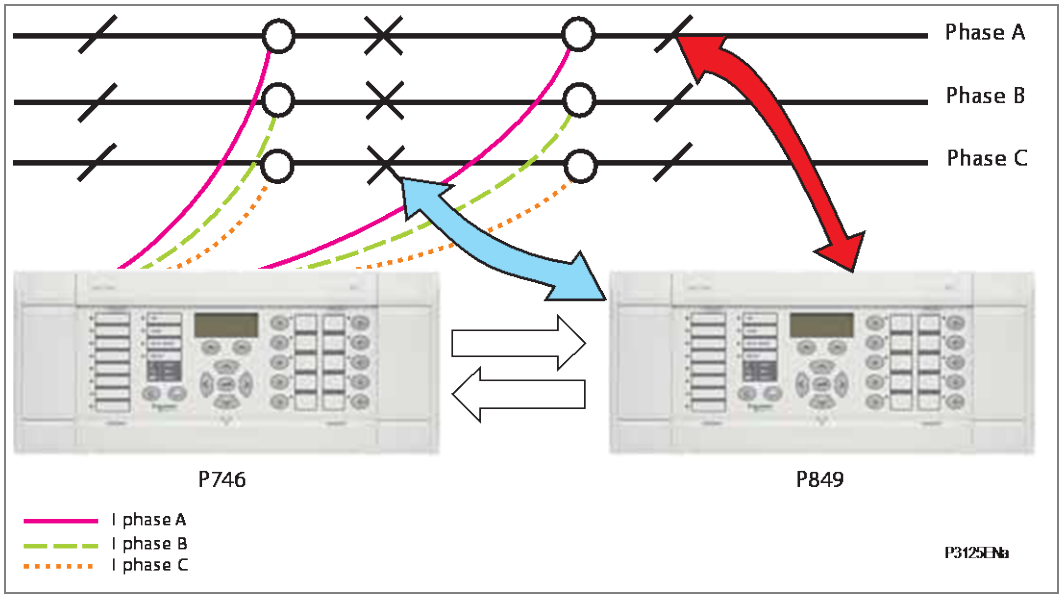

Figure 3 – P746/P849 Phases A, B and C

In this use case, the P849 can be used to transmit the status of switchgear to the P746 through GOOSE messages.

P849 can also be used to open a Circuit Breaker based on a command sent from P746 through GOOSE message.

The inter-device communication can also be done through InterMiCOM proprietary protocol.

1.1.2.2 P746 Three Box and P849 Use Case

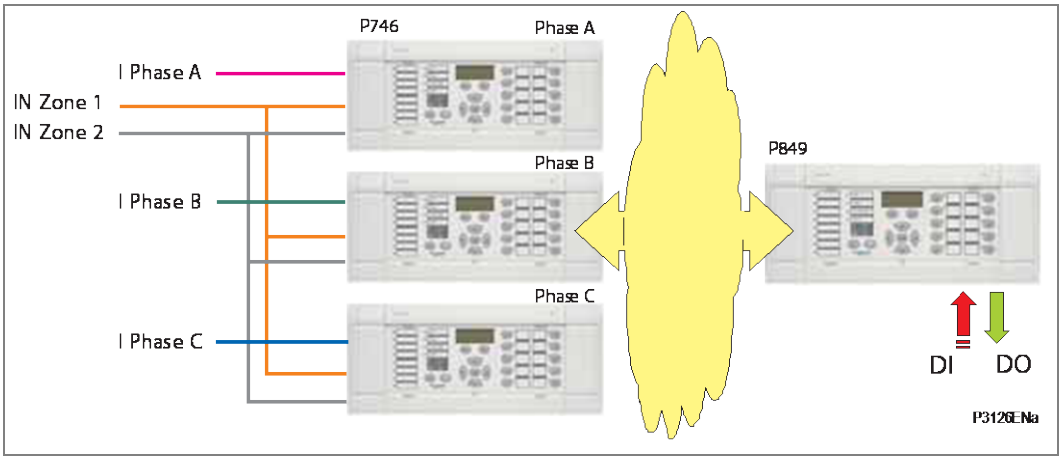

Figure 4 - P746 Three Box and P849 Use Case

In this use case P849 can be as well used to mount to P746 devices though GOOSEs the status of some switchgear.

P849 can also be used to open a Circuit Breaker based on a command sent from P746 through GOOSE message.

Note	*The inter-device network is also used for Inter P746 communications.*

The most recommended architecture for this use case is to use redundant Ethernet network as described hereafter.

It is recommended that GOOSE messages are exchanged between P746 protection relays and P849 over a Redundant Ethernet network.

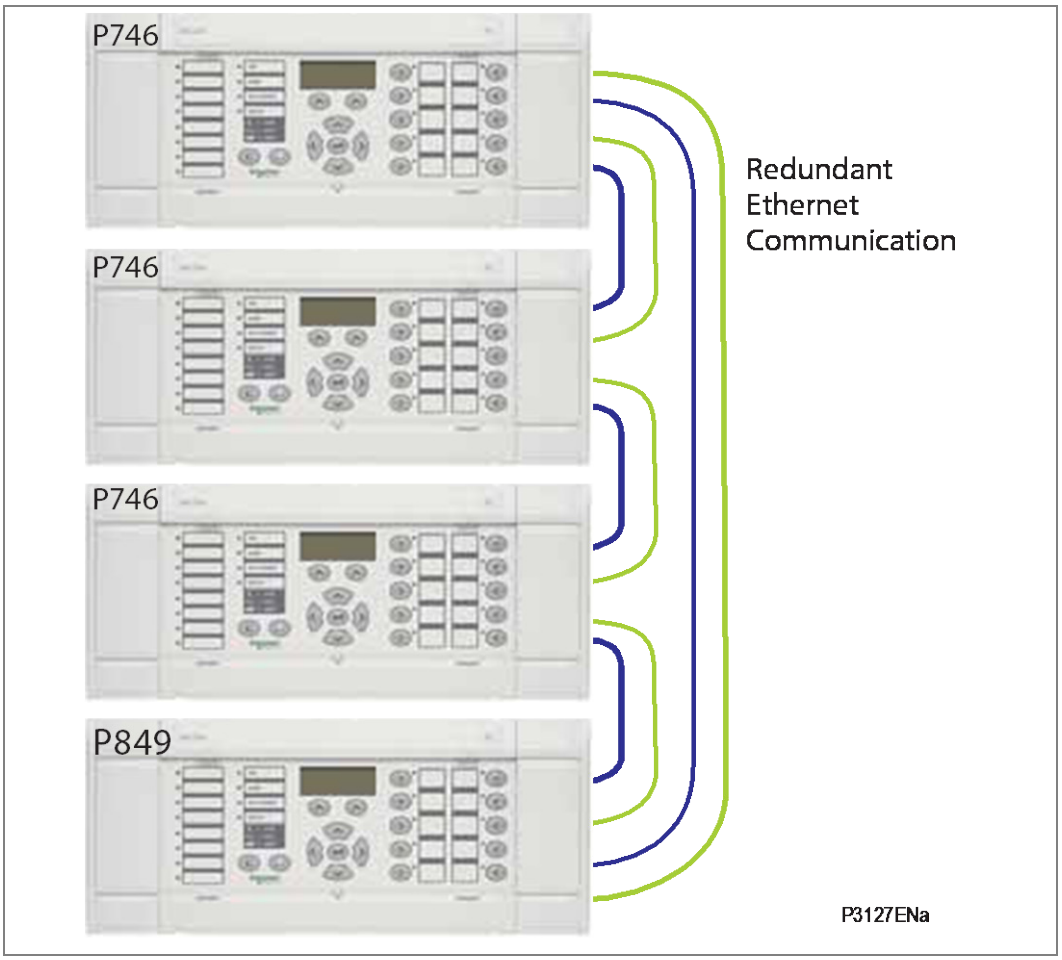

Figure 5 – P746 & P849 Redundant Ethernet Communications

1.1.2.3 P746 3 Box and Several P849 Use Case

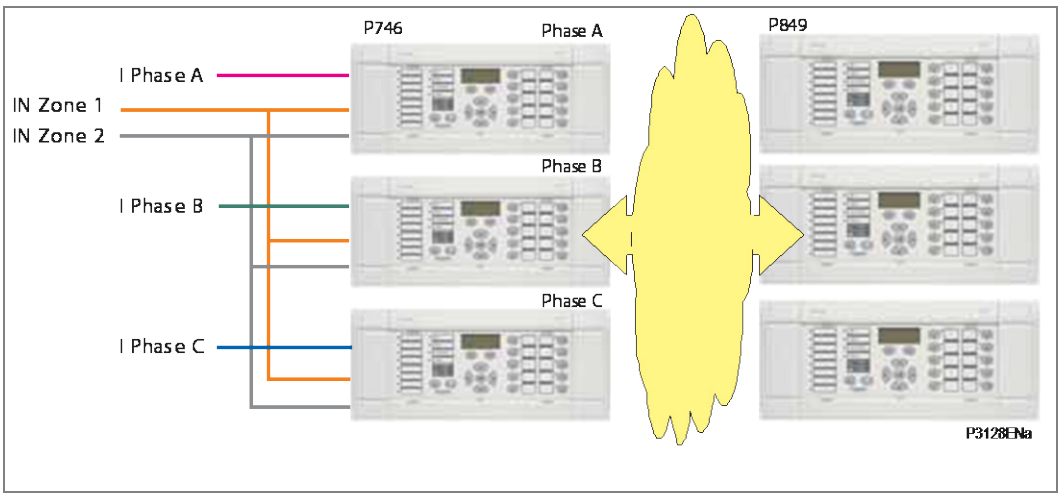

Figure 6 - P746 3 Box and Several P849 Use Case

The number of P849 that can be connected to device or a system of devices is not limited.

The number of P849 used will depend of customer application and more precisely on the corresponding required number of digital inputs and digital outputs by the application.

1.1.3 GOOSE Testing Mode

An inbuilt GOOSE Testing Mode is provided to facilitate IEC61850 commissioning.

From front panel of the device the user will be able to process GOOSE Testing mode.

This function is performed through PSL and can be customized to some particular application cases if required. The demonstration example below is based on P746.

It is supposed that he connected P746 is also in GOOSE Testing Mode or has got adequate PSL to answer P849 GOOSEs.

It consists in sending and receiving Test GOOSEs and check that they are correctly sent and received.

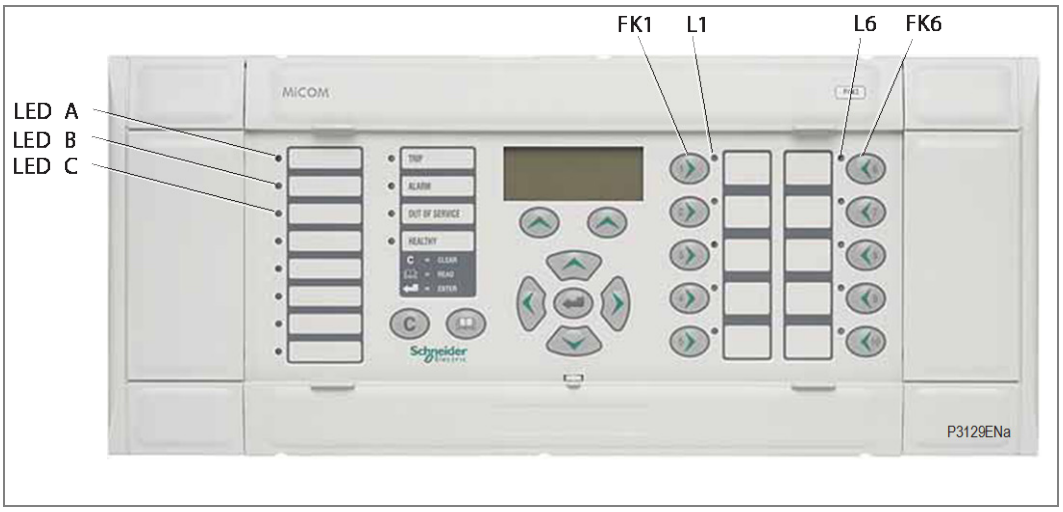

Figure 7 – GOOSE Testing Mode

To activate GOOSE Testing Mode press Function key 1

To send a testing GOOSE message press Function key 6.

LED A, B and C are used to check that the P849 receives correctly GOOSEs.

1.1.3.1 GOOSE Testing mode in case of P746 one box mode:

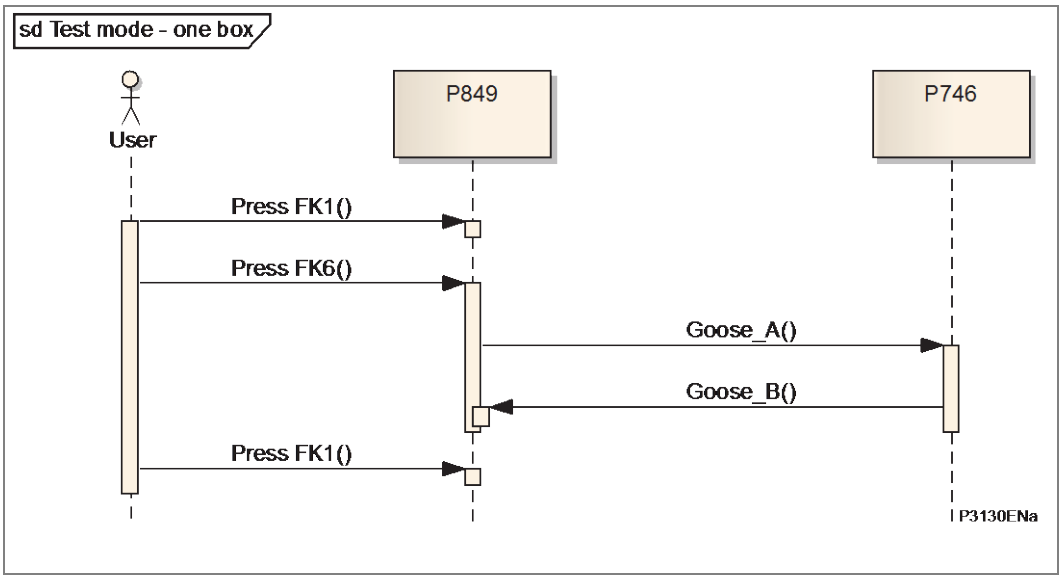

Figure 8 – GOOSE Testing mode in case of P746 one box mode

GOOSE_A and GOOSE_B are test GOOSE messages (please refer to default PSL for more detail) LED A on the relay lights on as soon as GOOSE_B is received by P849

1.1.3.2 GOOSE Testing Mode in Case of P746 Three Box Mode:

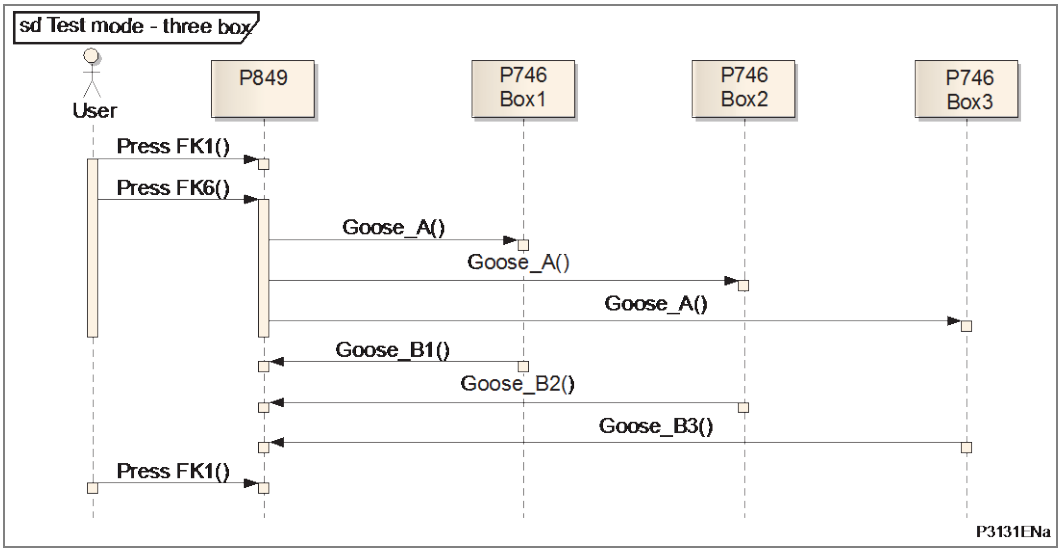

Figure 9 - GOOSE Testing mode in case of P746 three box mode

GOOSE_A and GOOSE_B are test GOOSE messages (please refer to default PSL for more detail) LED A on the P849 lights on as soon as GOOSE_B1 is received by P849. It proves that GOOSEs are correctky echanged between P849 and P746-Box1.

In the same manner LED B on the P849 lights on as soon as GOOSE_B2 is received by P849.

In the same manner LED C on the P849 lights on as soon as GOOSE_B3 is received by P849.

1.2 Control Application

1.2.1 Definition

MiCOM P849 will be able to communicate with usual legacy protocols and thus will behave as Remote Terminal Unit (Communication to Digital Control System).

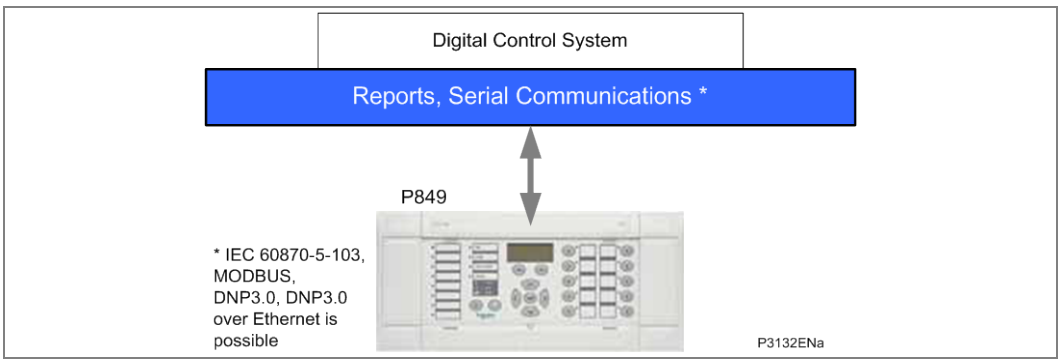

Figure 10 – P849 reports and serial communications

2 APPLICATION OF MICOM P849 FUNCTIONS

Warning **Before carrying out any work on the equipment, you should be familiar with the contents of the Safety Information chapter/safety guide SFTY/4LM/C11 or later issue, the Technical Data chapter and the ratings on the equipment rating label.**

The non-protection features for the scheme are summarised below:

- Standard event and precise event recording – Comprehensive analysis available via standard event lists, and precise event records which can be accessed locally via the relay LCD or remotely via the serial communication link.
- Real time clock/time synchronisation – Time synchronisation available via IRIG-B input.
- Four settings groups – Independent remotely selectable setting groups to allow for customer specific applications.
- Commissioning test facilities.
- Continuous self monitoring – extensive self checking routines to ensure maximum reliability.
- Graphical Programmable Scheme Logic (PSL) – allowing user control logic to be tailored to the specific application.

2.1 Function Keys

These function keys can be used to trigger any function that they are connected to as part of the PSL. The function key commands can be found in the ‘Function Keys’ menu. In the ‘Fn. Key Status’ menu cell there is a 10 bit word which represent the 10 function key commands and their status can be read from this 10 bit word. In the programmable scheme logic editor 10 function key signals, DDB 676 – 685, which can be set to a logic 1 or On state are available to perform control functions defined by the user.

The “Function Keys” column has ‘Fn. Key n Mode’ cell which allows the user to configure the function key as either ‘Toggled’ or ‘Normal’. In the ‘Toggle’ mode the function key DDB signal output will remain in the set state until a reset command is given, by activating the function key on the next key press. In the ‘Normal’ mode, the function key DDB signal will remain energized for as long as the function key is pressed and will then reset automatically.

A minimum pulse duration can be programmed for a function key by adding a minimum pulse timer to the function key DDB output signal. The “Fn. Key n Status” cell is used to enable/unlock or disable the function key signals in PSL. The ‘Lock’ setting has been specifically provided to allow the locking of a function key thus preventing further activation of the key on consequent key presses. This allows function keys that are set to ‘Toggled’ mode and their DDB signal active ‘high’, to be locked in their active state thus preventing any further key presses from desactivating the associated function. Locking a function key that is set to the “Normal” mode causes the associated DDB signals to be permanently off. This safety feature prevents any inadvertent function key presses from activating or deactivating critical relay functions. The “Fn. Key Labels” cell makes it possible to change the text associated with each individual function key. This text will be displayed when a function key is accessed in the function key menu, or it can be displayed in the PSL.

The status of the function keys is stored in battery backed memory. In the event that the auxiliary supply is interrupted the status of all the function keys will be recorded. Following the restoration of the auxiliary supply the status of the function keys, prior to supply failure, will be reinstated. If the battery is missing or flat the function key DDB signals will set to logic 0 once the auxiliary supply is restored. The relay will only recognise a single function key press at a time and that a minimum key press duration of approximately 200msec. is required before the key press is recognised in PSL. This deglitching feature avoids accidental double presses.

DDB: '**Function Key 1**' (see P849/EN PL)

The activation of one of the ten function key will drive an associated DDB signal. The DDB signal will remain active depending on the programmed setting i.e. toggled or normal. Toggled mode means the DDB signal will remain latched or unlatched on key press and normal means the DDB will only be active for the duration of the key press.

DDB: '**FnKey LED 1 Red**'

Ten programmable tri-colour LEDs associated with each function key are used to indicate the status of the associated pushbutton's function. Each LED can be programmed to indicate red, yellow or green as required. The green LED is configured by driving the green DDB input. The red LED is configured by driving the red DDB input. The yellow LED is configured by driving the red and green DDB inputs simultaneously. When the LED is activated the associated DDB signal will be asserted. For example, if FnKey Led 1 Red is activated, DDB will be asserted.

DDB '**FnKey LED 1 Grn**'

The same explanation as for Fnkey 1 Red applies.

DDB '**LED 1 Red**'

Eight programmable tri-colour LEDs that can be programmed to indicate red, yellow or green as required. The green LED is configured by driving the green DDB input. The red LED is configured by driving the red DDB input. The yellow LED is configured by driving the red and green DDB inputs simultaneously. When the LED is activated the associated DDB signal will be asserted. For example, if Led 1 Red is activated, DDB #640 will be asserted.

DDB '**LED 1 Grn**'

The same explanation as for LED 1 Red applies.

2.2 Opto Inputs Configuration

The MiCOM P849 is fitted with universal opto-isolated logic inputs (opto inputs) that can be programmed for the nominal battery voltage of the circuit of which they are a part i.e. thereby allowing different voltages for different circuits e.g. signalling. They can also be programmed as Standard 60% - 80% or **50% - 70%** to satisfy different operating constraints (**Dual Opto**).

Threshold levels are as follows:

Nominal Battery Voltage (Vdc)	Standard 60% - 80%		50% - 70%	
	No Operation (logic 0) Vdc	Operation (logic 1) Vdc	No Operation (logic 0) Vdc	Operation (logic 1) Vdc
24 / 27	<16.2	>19.2	<12.0	>16.8
30 / 34	<20.4	>24.0	<15.0	>21.0
48 / 54	<32.4	>38.4	<24.0	>33.6
110 / 125	<75.0	>88.0	<55.0	>77.0

Nominal Battery Voltage (Vdc)	Standard 60% - 80%		50% - 70%	
	No Operation (logic 0) Vdc	Operation (logic 1) Vdc	No Operation (logic 0) Vdc	Operation (logic 1) Vdc
220 / 250	<150.0	>176.0	<110	>154

Table 1 – Opto-Config Threshold Levels

This lower value eliminates fleeting pickups that may occur during a battery earth fault, when stray capacitance may present up to 50% of battery voltage across an input.

Each input also has selectable filtering which can be utilised. This allows use of a pre-set filter of ½ cycle which renders the input immune to induced noise on the wiring: although this method is secure it can be slow. This can be improved by switching off the ½ cycle filter in which case one of the following methods to reduce ac noise should be considered. The first method is to use double pole switching on the input, the second is to use screened twisted cable on the input circuit.

2.3 Hotkeys / Control Inputs

2.3.1 Control Inputs

The control inputs function as software switches that can be set or reset either locally or remotely. These inputs can be used to trigger any function that they are connected to as part of the PSL.

This column is visible when the “Control I/P Config” setting (“Configuration” column) = “visible”.

There are three setting columns associated with the control inputs which are: “CONTROL INPUTS”, “CTRL I/P CONFIG” and “CTRL I/P LABELS”. The function of these columns is described below.

The Control Input commands can be found in the ‘Control Input’ menu. In the ‘Ctrl I/P status’ menu cell there is a 32 bit word which represent the 32 control input commands. The status of the 32 control inputs can be read from this 32 bit word. The 32 control inputs can also be set and reset from this cell by setting a 1 to set or 0 to reset a particular control input. Alternatively, each of the 32 Control Inputs can be set and reset using the individual menu setting cells ‘Control Input 1, 2, 3’ etc. The Control Inputs are available through the relay menu as described above and also via the rear communications.

The two hotkeys in the front panel can perform a direct command if a dedicated PSL has been previously created using DDB: **'CONTROL INPUT'** cells (see P849/EN PL). The MiCOM P849 offers 32 control inputs which can be activated by the Hotkey manually or by the IEC 103 remote communication.

2.3.2 Control I/P Configuration

The “CTRL I/P CONFIG” column has several functions one of which allows the user to configure the control inputs as either ‘latched’ or ‘pulsed’. A latched control input will remain in the set state until a reset command is given, either by the menu or the serial communications. A pulsed control input, however, will remain energised for 10ms after the set command is given and will then reset automatically (i.e. no reset command required).

In addition to the latched / pulsed option this column also allows the control inputs to be individually assigned to the “Hotkey” menu by setting ‘1’ in the appropriate bit in the “Hotkey Enabled” cell. The hotkey menu allows the control inputs to be set, reset or pulsed without the need to enter the “CONTROL INPUTS” column. The “Ctrl Command”

cell also allows the SET / RESET text, displayed in the hotkey menu, to be changed to something more suitable for the application of an individual control input, such as “ON / OFF”, “IN / OUT” etc.

2.3.3 Control I/P Labels

The “CTRL I/P LABELS” column makes it possible to change the text associated with each individual control input. This text will be displayed when a control input is accessed by the hotkey menu, or it can be displayed in the PSL.

Note	*With the exception of pulsed operation, the status of the control inputs is stored in battery backed memory. In the event that the auxiliary supply is interrupted the status of all the inputs will be recorded. Following the restoration of the auxiliary supply the status of the control inputs, prior to supply failure, will be reinstated. If the battery is missing or flat the control inputs will set to logic 0 once the auxiliary supply is restored*

USING THE PSL EDITOR

CHAPTER 7

Date:	08/2014	
Products covered by this chapter:	This chapter covers the specific versions of the MiCOM products listed below. This includes ***only*** the following combinations of Software Version and Hardware Suffix.	
Hardware Suffix:	All MiCOM Px4x products	
Software Version:	All MiCOM Px4x products	
Connection Diagrams:	10P141xx (xx = 01 to 07) 10P142xx (xx = 01 to 07) 10P143xx (xx = 01 to 07) 10P145xx (xx = 01 to 07) 10P241xx (xx = 01 to 02) 10P242xx (xx = 01) 10P243xx (xx = 01) 10P342xx (xx = 01 to 17) 10P343xx (xx = 01 to 19) 10P344xx (xx = 01 to 12) 10P345xx (xx = 01 to 07) 10P44303 (SH 01 and 03) 10P44304 (SH 01 and 03) 10P44305 (SH 01 and 03) 10P44306 (SH 01 and 03) 10P445xx (xx = 01 to 04) 10P44600 10P44601 (SH 1 to 2) 10P44602 (SH 1 to 2) 10P44603 (SH 1 to 2) 10P54302 (SH 1 to 2) 10P54303 (SH 1 to 2)	10P54400 10P54404 (SH 1 to 2) 10P54405 (SH 1 to 2) 10P54502 (SH 1 to 2) 10P54503 (SH 1 to 2) 10P54600 10P54604 (SH 1 to 2) 10P54605 (SH 1 to 2) 10P54606 (SH 1 to 2) 10P54702xx (xx = 01 to 02) 10P54703xx (xx = 01 to 02) 10P54704xx (xx = 01 to 02) 10P54705xx (xx = 01 to 02) 10P642xx (xx = 1 to 10) 10P643xx (xx = 1 to 6) 10P645xx (xx = 1 to 9) 10P740xx (xx = 01 to 07) 10P746xx (xx = 01 to 07) 10P8401 10P8402 10P8401 10P8402 10P8403 10P849xx (xx = 01 to 06)

CONTENTS

FIGURES

TABLES

1 OVERVIEW

The purpose of the Programmable Scheme Logic (PSL) is to allow the relay user to configure an individual protection scheme to suit their own particular application. This is achieved through the use of programmable logic gates and delay timers.

The input to the PSL is any combination of the status of opto inputs. It is also used to assign the mapping of functions to the opto inputs and output contacts, the outputs of the protection elements, e.g. protection starts and trips, and the outputs of the fixed protection scheme logic. The fixed scheme logic provides the relay's standard protection schemes.

The PSL itself consists of software logic gates and timers. The logic gates can be programmed to perform a range of different logic functions and can accept any number of inputs. The timers are used either to create a programmable delay, and/or to condition the logic outputs, e.g. to create a pulse of fixed duration on the output regardless of the length of the pulse on the input. The outputs of the PSL are the LEDs on the front panel of the relay and the output contacts at the rear.

The execution of the PSL logic is event driven; the logic is processed whenever any of its inputs change, for example as a result of a change in one of the digital input signals or a trip output from a protection element. Also, only the part of the PSL logic that is affected by the particular input change that has occurred is processed. This reduces the amount of processing time that is used by the PSL; even with large, complex PSL schemes the relay trip time will not lengthen.

This system provides flexibility for the user to create their own scheme logic design. However, it also means that the PSL can be configured into a very complex system; hence setting of the PSL is implemented through the PC support package MiCOM S1 Studio.

2 MICOM S1 STUDIO PSL EDITOR

The PSL Editor software can be used from within MiCOM S1 Studio or directly.

This chapter assumes that you are using the PSL Editor from within MiCOM S1 Studio.

If you use it from MiCOM S1 Studio, the S1 Studio software will be locked whilst you are using the PSL editor software. The S1 Studio software will be unlocked when you close the PSL Editor software.

The MiCOM S1 Studio product is updated periodically. These updates provide support for new features (such as allowing you to manage new MiCOM products, as well as using new software releases and hardware suffixes). The updates may also include fixes. **Accordingly, we strongly advise customers to use the latest Schneider Electric version of MiCOM S1 Studio.**

2.1 How to Obtain MiCOM S1 Studio Software

The MiCOM S1 Studio software is avilable from the Schneider Electric website:

- www.schneider-electric.com

2.2 To Start the MiCOM S1 Studio

To Start the MiCOM S1 Studio software, click the **Start** > **Programs** > **Schneider Electric** > **MiCOM S1 Studio** > **MiCOM S1 Studio** menu option.

2.3 To Open a Pre-Existing System

Within MiCOM S1 Studio, click the **File** + **Open System** menu option.

Navigate to where the scheme is stored, then double-click to open the scheme.

2.4 To Start the PSL Editor

The PSL editor lets you connect to any MiCOM device front port, retrieve and edit its PSL files and send the modified file back to a suitable MiCOM device.

Px30 and Px40 products are edited different versions of the PSL Editor. There is one link to the Px30 editor and one link to the Px40 editor.

To start the PSL editor for Px40 products:

Highlight the PSL file you wish to edit, and then either:

Double-click the highlighted PSL file,

Click the open icon or

In the MiCOM S1 Studio main menu, select Tools > PSL PSL editor (Px40) menu.

The PSL Editor will then start, and show you the relevant PSL Diagram(s) for the file you have opened. An example of such a PSL diagram is shown in Figure 1.

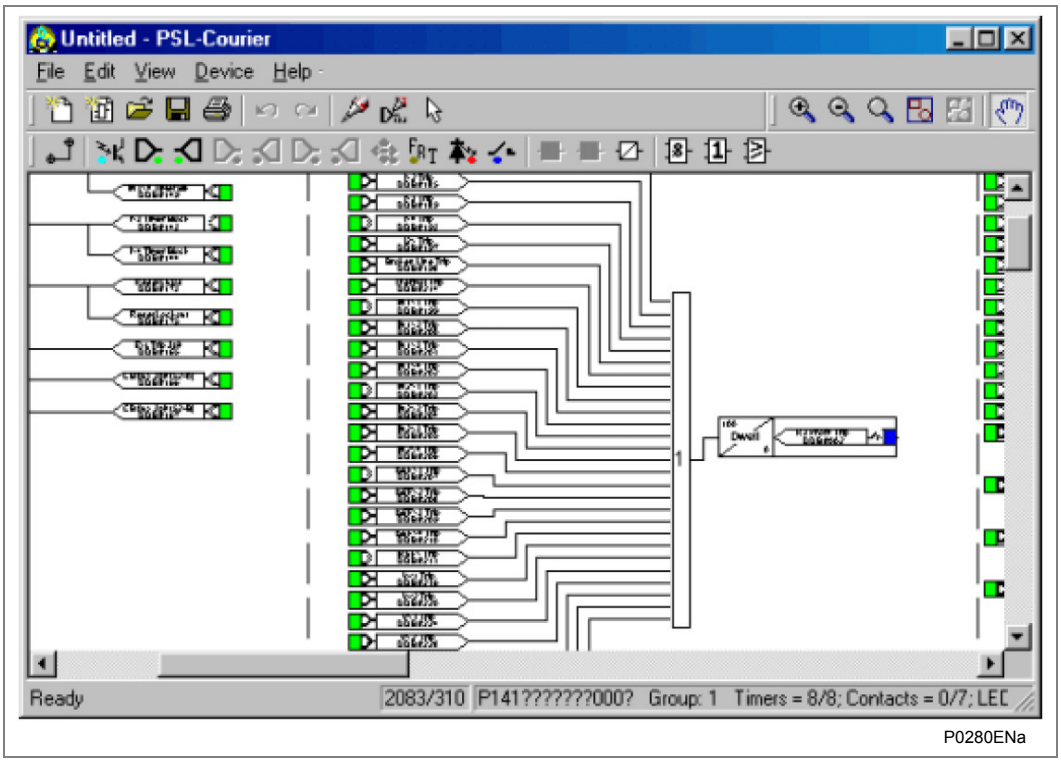

Figure 1 - Example of a PSL editor module

2.5 How to use MiCOM PSL Editor

The MiCOM PSL editor lets you:

- Start a new PSL diagram
- Extract a PSL file from a MiCOM Px40 IED
- Open a diagram from a PSL file
- Add logic components to a PSL file
- Move components in a PSL file
- Edit link of a PSL file
- Add link to a PSL file
- Highlight path in a PSL file
- Use a conditioner output to control logic
- Download PSL file to a MiCOM Px40 IED
- Print PSL files

For a detailed discussion on how to use these functions, please refer to MiCOM S1 Studio Users Manual.

2.6 Warnings

Before the scheme is sent to the relay checks are done. Various warning messages may be displayed as a result of these checks.

The Editor first reads in the model number of the connected relay, then compares it with the stored model number. A "wildcard" comparison is used. If a model mismatch occurs, a warning is generated before sending starts. Both the stored model number and the number read from the relay are displayed with the warning. However, the user must decide if the settings to be sent are compatible with the relay that is connected. Ignoring the warning could lead to undesired behavior of the relay.

If there are any potential problems of an obvious nature then a list will be generated. The types of potential problems that the program attempts to detect are:

- One or more gates, LED signals, contact signals, and/or timers have their outputs linked directly back to their inputs. An erroneous link of this sort could lock up the relay, or cause other more subtle problems to arise.
- Inputs to Trigger (ITT) exceeds the number of inputs. If a programmable gate has its ITT value set to greater than the number of actual inputs; the gate can never activate. There is no lower ITT value check. A 0-value does not generate a warning.
- Too many gates. There is a theoretical upper limit of 256 gates in a scheme, but the practical limit is determined by the complexity of the logic. In practice the scheme would have to be very complex, and this error is unlikely to occur.
- Too many links. There is no fixed upper limit to the number of links in a scheme. However, as with the maximum number of gates, the practical limit is determined by the complexity of the logic. In practice the scheme would have to be very complex, and this error is unlikely to occur.

3 TOOLBAR AND COMMANDS

There are a number of toolbars available for easy navigation and editing of PSL.

3.1 Standard Tools

For file management and printing.

Blank Scheme	Create a blank scheme based on a relay model.
Default Configuration	Create a default scheme based on a relay model.
Open	Open an existing diagram.
Save	Save the active diagram.
Print	Display the Windows Print dialog, enabling you to print the current diagram.
Undo	Undo the last action.
Redo	Redo the previously undone action.
Redraw	Redraw the diagram.
Number of DDBs	Display the DDB numbers of the links.
Calculate CRC	Calculate unique number based on both the function and layout of the logic.
Compare Files	Compare current file with another stored on disk.
Select	Enable the select function. While this button is active, the mouse pointer is displayed as an arrow. This is the default mouse pointer. It is sometimes referred to as the selection pointer. Point to a component and click the left mouse button to select it. Several components may be selected by clicking the left mouse button on the diagram and dragging the pointer to create a rectangular selection area.

3.2 Alignment Tools

To align logic elements horizontally or vertically into groups.

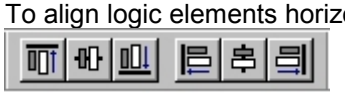

	Align Top	Align all selected components so the top of each is level with the others.
	Align Middle	Align all selected components so the middle of each is level with the others.
	Align Bottom	Align all selected components so the bottom of each is level with the others.
	Align Left	Align all selected components so the leftmost point of each is level with the others.
	Align Centre	Align all selected components so the centre of each is level with the others.
	Align Right	Align all selected components so the rightmost point of each is level with the others.

3.3 Drawing Tools

To add text comments and other annotations, for easier reading of PSL schemes.

	Rectangle	When selected, move the mouse pointer to where you want one of the corners to be hold down the left mouse button and move it to where you want the diagonally opposite corner to be. Release the button. To draw a square hold down the SHIFT key to ensure height and width remain the same.
	Ellipse	When selected, move the mouse pointer to where you want one of the corners to be hold down the left mouse button and move until the ellipse is the size you want it to be. Release the button. To draw a circle hold down the SHIFT key to ensure height and width remain the same.
	Line	When selected, move the mouse pointer to where you want the line to start, hold down left mouse, move to the position of the end of the line and release button. To draw horizontal or vertical lines only hold down the SHIFT key.
	Polyline	When selected, move the mouse pointer to where you want the polyline to start and click the left mouse button. Now move to the next point on the line and click the left button. Double click to indicate the final point in the polyline.
	Curve	When selected, move the mouse pointer to where you want the polycurve to start and click the left mouse button. Each time you click the button after this a line will be drawn, each line bisects its associated curve. Double click to end. The straight lines will disappear leaving the polycurve. Note: whilst drawing the lines associated with the polycurve, a curve will not be displayed untileither three lines in succession have been drawn or the polycurve line is complete.
	Text	When selected, move the mouse pointer to where you want the text to begin and click the left mouse button. To change the font, size or colour, or text attributes select Properties from the right mouse button menu.
	Image	When selected, the Open dialog is displayed, enabling you to select a bitmap or icon file. Click Open, position the mouse pointer where you want the image to be and click the left mouse button.

3.4 Nudge Tools

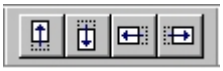

To move logic elements.

The nudge tool buttons enable you to shift a selected component a single unit in the selected direction, or five pixels if the SHIFT key is held down.

As well as using the tool buttons, single unit nudge actions on the selected components can be achieved using the arrow keys on the keyboard.

	Nudge Up	Shift the selected component(s) upwards by one unit. Holding down the SHIFT key while clicking on this button will shift the component five units upwards.
	Nudge Down	Shift the selected component(s) downwards by one unit. Holding down the SHIFT key while clicking on this button will shift the component five units downwards.
	Nudge Left	Shift the selected component(s) to the left by one unit. Holding down the SHIFT key while clicking on this button will shift the component five units to the left.
	Nudge Right	Shift the selected component(s) to the right by one unit. Holding down the SHIFT key while clicking on this button will shift the component five units to the right.

3.5 Rotation Tools

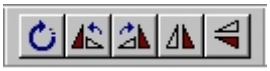

To spin, mirror and flip.

	Free Rotate	Enable the rotation function. While rotation is active components may be rotated as required. Press the ESC key or click on the diagram to disable the function.
	Rotate Left	Rotate the selected component 90 degrees to the left.
	Rotate Right	Rotate the selected component 90 degrees to the right.
	Flip Horizontal	Flip the component horizontally.
	Flip Vertical	Flip the component vertically.

3.6 Structure Tools

To change the stacking order of logic components. 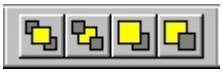

	Bring to Front	Bring the selected components in front of all other components.
	Send to Back	Bring the selected components behind all other components.
	Bring Forward	Bring the selected component forward one layer.
	Send Backward	Send the selected component backwards one layer.

3.7 Zoom and Pan Tools

For scaling the displayed screen size, viewing the entire PSL, or zooming to a selection.

	Zoom In	Increases the Zoom magnification by 25%.
	Zoom Out	Decreases the Zoom magnification by 25%.
	Zoom	Enable the zoom function. While this button is active, the mouse pointer is displayed as a magnifying glass. Right-clicking will zoom out and left-clicking will zoom in. Press the ESC key to return to the selection pointer. Click and drag to zoom in to an area.
	Zoom to Fit	Display at the highest magnification that will show all the diagram's components.
	Zoom to Selection	Display at the highest magnification that will show the selected component(s).
	Pan	Enable the pan function. While this button is active, the mouse pointer is displayed as a hand. Hold down the left mouse button and drag the pointer across the diagram to pan. Press the ESC key to return to the selection pointer.

3.8 Logic Symbols

This toolbar provides icons to place each type of logic element into the scheme diagram. Not all elements are available in all devices. Icons will only be displayed for those elements available in the selected device. Depending on the device, the toolbar may not include Function key or coloured LED conditioner/signal or Contact conditioner or SR Gate icons.

P2718ENa

Link 
Create a link between two logic symbols.

Opto Signal 
Create an opto signal.

Input Signal 
Create an input signal.

Output Signal 
Create an output signal.

GOOSE In 
Create an input signal to logic to receive a UCA2.0 or IEC 61850 GOOSE message transmitted from another IED.

GOOSE Out 
Create an output signal from logic to transmit a UCA2.0 or IEC 61850 GOOSE message to another IED.

Control In 
Create an input signal to logic that can be operated from an external command.

Integral Intertripping In/InterMiCOM In 
Create an input signal to logic to receive a MiCOM command transmitted from another IED. InterMiCOM is not available for all products.

Integral Intertripping Out/InterMiCOM Out  Create an output signal from logic to transmit a MiCOM command to another IED. InterMiCOM is not available for all products.

Function Key 
Create a function key input signal.

Trigger Signal 
Create a fault record trigger.

LED Signal 

Create an LED input signal that repeats the status of the LED.
The icon colour shows whether the product uses mono-colour or tri-color LEDs.

Contact Signal 
Create a contact signal.

LED Conditioner 
Create a LED conditioner.
The icon colour shows whether the product uses mono-colour or tri-color LEDs.

Contact Conditioner 
Create a contact conditioner. Contact conditioning is not available for all products.

Timer 
Create a timer.

AND Gate 
Create an AND Gate.

OR Gate 
Create an OR Gate.

Programmable Gate 
Create a programmable gate.

SR gate 
Create an SR gate.

4 PSL LOGIC SIGNALS PROPERTIES

The logic signal toolbar is used for the selection of logic signals.

This allows you to link signals together to program the PSL. A number of different properties are associated with each signal. In the following sections these are characterized by the use of an icon from the toolbar; together with a signal name and a DDB number. The name and DDB number are shown in a pointed rectangular block, which includes a colour code, the icon, the name, DDB No and a directional pointer. One example of such a block (for P54x for Opto Signal 1 DDB No #032) is shown below:

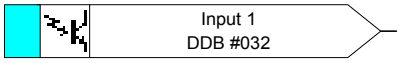

More examples of these are shown in the following properties sections.

Important	**The DDB Numbers vary according to the particular product and the particular name, so that Opto Signal 1 may not be DDB No #032 for all products. The various names and DDB numbers illustrated below are provided as an example.** **You need to look up the DDB numbers for the signal and the specific MiCOM product you are working on in the relevant DDB table for your chosen product.**

4.1 Signal Properties Menu

The logic signal toolbar is used for the selection of logic signals. To use this:

Use the logic toolbar to select logic signals.
This is enabled by default but to hide or show it, select **View** > **Logic Toolbar**.

Zoom in or out of a logic diagram using the toolbar icon or select **View** > **Zoom Percent**.

Right-click any logic signal and a context-sensitive menu appears.

Certain logic elements show the **Properties…** option. Select this and a **Component Properties** window appears. The Component Properties window and the signals listed vary depending on the logic symbol selected.

The following subsections describe each of the available logic symbols.

4.2 Link Properties

Links form the logical link between the output of a signal, gate or condition and the input to any element.

Any link that is connected to the input of a gate can be inverted. Right-click the input and select **Properties…**. The **Link Properties** window appears.

Figure 2 - Link properties

4.2.1 Rules for Linking Symbols

An inverted link is shown with a small circle on the input to a gate. A link must be connected to the input of a gate to be inverted.

Links can only be started from the output of a signal, gate, or conditioner, and can only be ended at an input to any element.

Signals can only be an input or an output. To follow the convention for gates and conditioners, input signals are connected from the left and output signals to the right. The Editor automatically enforces this convention.

A link is refused for the following reasons:

- An attempt to connect to a signal that is already driven. The reason for the refusal may not be obvious because the signal symbol may appear elsewhere in the diagram.

  Right-click the link and select Highlight to find the other signal. Click anywhere on the diagram to disable the highlight.

- An attempt is made to repeat a link between two symbols. The reason for the refusal may not be obvious because the existing link may be represented elsewhere in the diagram.

4.3 Opto Signal Properties

Each opto input can be selected and used for programming in PSL. Activation of the opto input drives an associated DDB signal.

For example, activating opto Input L1 asserts DDB 032 in the PSL for the P14x, P34x, P44y, P445, P54x, P547, P74x, P746, P841, P849product.

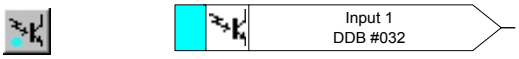

DDB Nos	*"Input 1 DDB #064" applies to: P24x, P64x.* *"Opto Label DDB #064" applies to: P44x.*

4.4 Input Signal Properties

Relay logic functions provide logic output signals that can be used for programming in PSL. Depending on the relay functionality, operation of an active relay function drives an associated DDB signal in PSL.

For example, DDB 671 is asserted in the PSL for the P44y, P547 & P841 product if the active earth fault 1, stage 1 protection operate/trip.

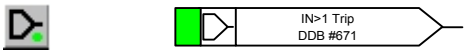

4.5 Output Signal Properties

Relay logic functions provide logic input signals that can be used for programming in PSL. Depending on the relay functionality, activation of the output signal will drive an associated DDB signal in PSL and cause an associated response to the relay function.

For example, if DDB 409 is asserted in the PSL for the P44y, P54x, P547 and P841 product, it will block the sensitive earth function stage 1 timer.

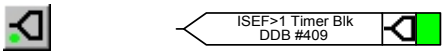

4.6 GOOSE Input Signal Properties

The PSL interfaces with the GOOSE Scheme Logic using 32 virtual inputs. The Virtual Inputs can be used in much the same way as the Opto Input signals.

The logic that drives each of the Virtual Inputs is contained within the relay's GOOSE Scheme Logic file. It is possible to map any number of bit-pairs, from any enrolled device, using logic gates onto a Virtual Input (see MiCOM S1 Studio Users Manual for more details).

For example DDB 224 will be asserted in PSL for the P44y, P54x, P547 & P841 product should virtual input 1 operate.

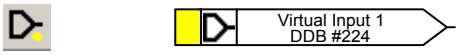

4.7 GOOSE Output Signal Properties

The PSI interfaces with the GOOSE Scheme Logic using of 32 virtual outputs. Virtual outputs can be mapped to bit-pairs for transmitting to any enrolled devices.

For example if DDB 256 is asserted in PSL for the P44y, P54x, P547 and P841 product, Virtual Output 32 and its associated mappings will operate.

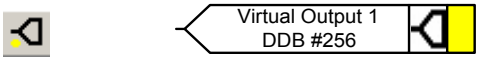

4.8 Control In Signal Properties

There are 32 control inputs which can be activated via the relay menu, 'hotkeys' or via rear communications. Depending on the programmed setting i.e. latched or pulsed, an associated DDB signal will be activated in PSL when a control input is operated.

For example operate control input 1 to assert DDB 192 in the PSL for the P44y, P54x, P547 and P841 product.

4.9 InterMiCOM Output Commands Properties

Important	**This does not apply to these products: P24x, P34x, P44x, P64x, P547, P74x, P746, P841 & P849.**

There are 16 InterMiCOM outputs that could be selected and use for teleprotection, remote commands, etc. "InterMiCOM Out" is a send command to a remote end that could be mapped to any logic output or opto input. This will be transmitted to the remote end as corresponding "InterMiCOM In" command for the P14x, P44y, P445 & P54x product.

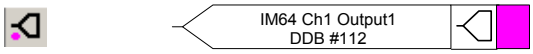

4.10 InterMiCOM Input Commands Properties

Important	This does not apply to these products: P24x, P34x, P44x, P64x, P547, P74x, P746, P841 & P849.

There are 16 InterMiCOM inputs that could be selected and use for teleprotection, remote commands, etc. “InterMiCOM In” is a received signal from remote end that could be mapped to a selected output relay or logic input for the P14x, P44y, P445 & P54x, product.

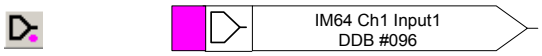

Example:

Relay End A — At end A, InterMiCOM Output 1 is mapped to the command indication “Clear Statistics” (issued at end A).

Relay End B — At end B, InterMiCOM Input 1 is mapped to the command “Clear Statistics”.

Upon receive of IM64 1 from relay at end A, the relay at end B will reset its statistics.

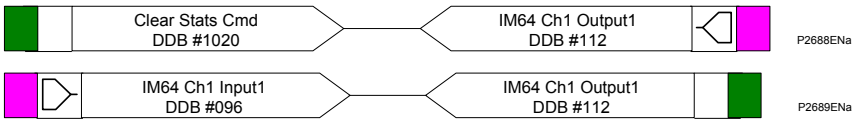

4.11 Function Key Properties

Each function key can be selected and used for programming in PSL. Activation of the function key will drive an associated DDB signal and the DDB signal will remain active depending on the programmed setting i.e. toggled or normal. Toggled mode means the DDB signal will remain latched or unlatched on key press and normal means the DDB will only be active for the duration of the key press.

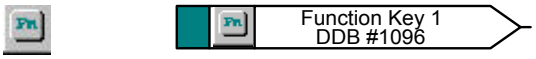

For example, operate function key 1 to assert DDB 1096 in the PSL for the P44y, P54x, P547 or P841 product.

4.12 Fault Recorder Trigger Properties

The fault recording facility can be activated, by driving the fault recorder trigger DDB signal.

For example assert DDB 702 to activate the fault recording in the PSL for the P44y, P54x, P547 or P841 product.

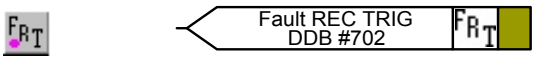

4.13 LED Signal Properties

All programmable LEDs will drive associated DDB signal when the LED is activated.

For example DDB 1036 will be asserted when LED 7 is activated for the P44y, P54x, P547 or P841 product.

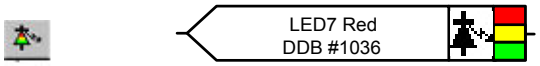

4.14 Contact Signal Properties

All relay output contacts will drive associated DDB signal when the output contact is activated.

For example DDB 009 will be asserted when output R10 is activated for all products.

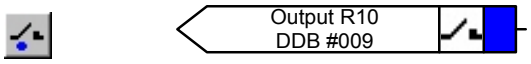

4.15 LED Conditioner Properties

1. Select the **LED name** from the list (only shown when inserting a new symbol).
2. Configure the LED output to be Red, Yellow or Green.

   Configure a Green LED by driving the Green DDB input.
   Configure a RED LED by driving the RED DDB input.
   Configure a Yellow LED by driving the RED and GREEN DDB inputs simultaneously.

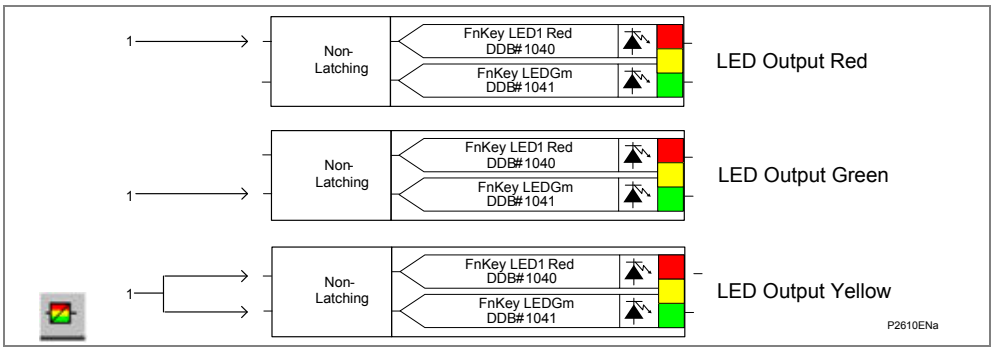

Figure 3 - Red, green and yellow LED outputs

3. Configure the LED output to be latching or non-latching.

DDB #642 and DDB #643 applies to these products: P14x, P44x, P74x, P746 and P849.

DDB #1040 and DDB #1041 applies to these products: P24x, P34x, P44y, P54x, P547, P64x and P841.

4.16 Contact Conditioner Properties

Each contact can be conditioned with an associated timer that can be selected for pick up, drop off, dwell, pulse, pick-up/drop-off, straight-through, or latching operation.

Straight-through means it is not conditioned in any way whereas **Latching** is used to create a sealed-in or lockout type function.

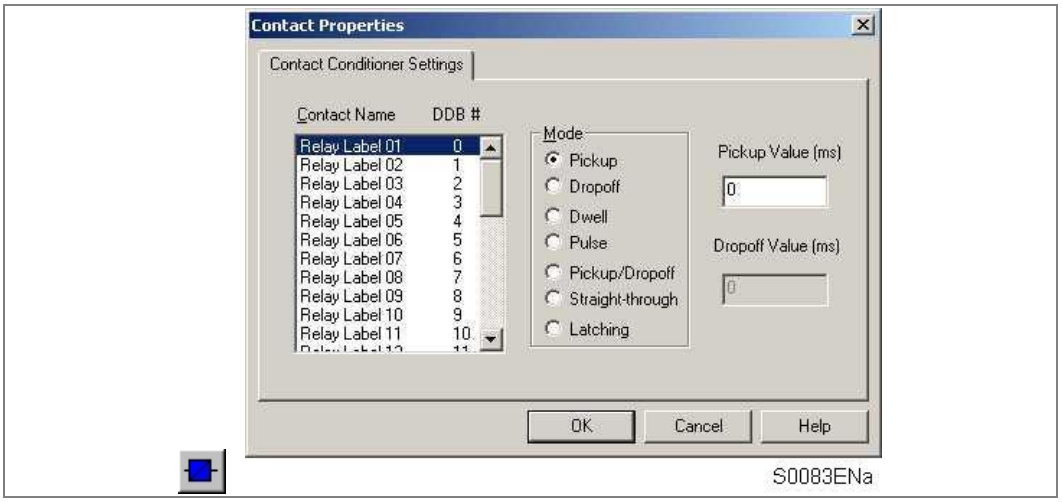

Figure 4 - Contact conditioner settings

1. Select the contact **name** from the **Contact Name** list (only shown when inserting a new symbol).
2. Choose the conditioner type required in the **Mode** tick list.
3. Set the **Pick-up** Time (in milliseconds), if required.
4. Set the **Drop-off** Time (in milliseconds), if required.

4.17 Timer Properties

Each timer can be selected for pick up, drop off, dwell, pulse or pick-up/drop-off operation.

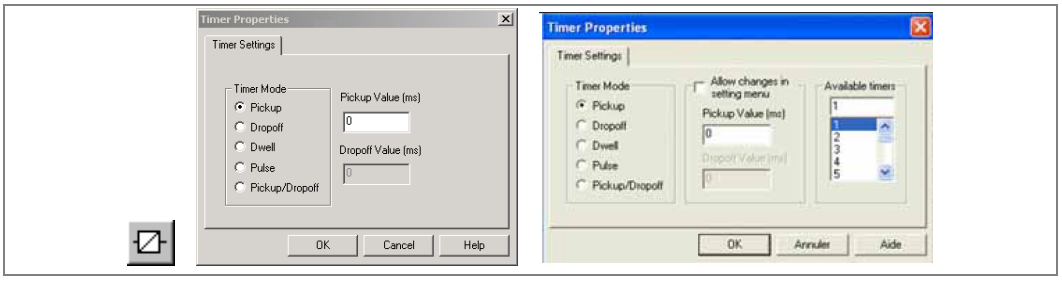

Figure 5 - Timer settings

1. Choose the operation mode from the **Timer Mode** tick list.
2. Set the Pick-up Time (in milliseconds), if required.
3. Set the Drop-off Time (in milliseconds), if required.

4.18 Gate Properties

A Gate may be an AND, OR, or programmable gate.

An **AND** gate requires that all inputs are TRUE for the output to be TRUE.

An **OR** gate requires that one or more input is TRUE for the output to be TRUE.

A **Programmable** gate requires that the number of inputs that are TRUE is equal to or greater than its 'Inputs to Trigger' setting for the output to be TRUE.

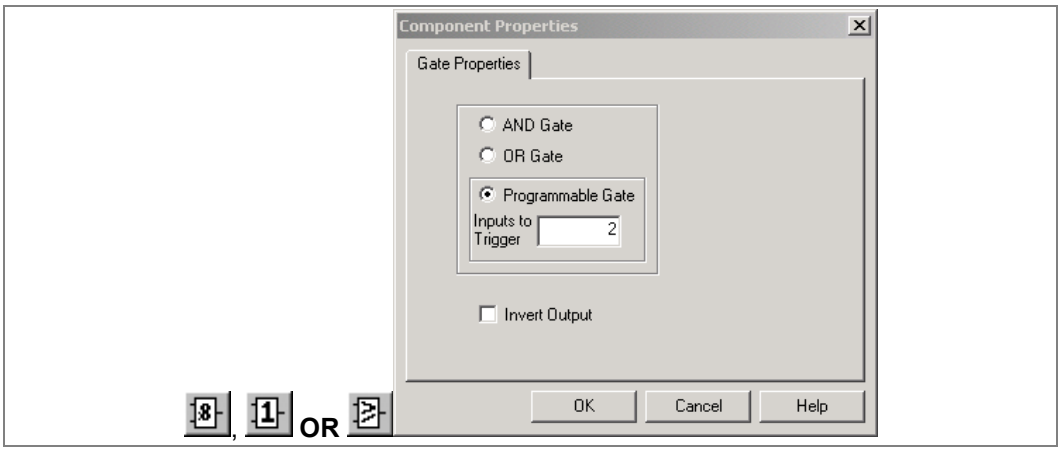

Figure 6 - Gate properties

1. Select the Gate type AND, OR, or Programmable.
2. Set the number of inputs to trigger when Programmable is selected.
3. Select if the output of the gate should be inverted using the Invert Output check box. An inverted output is indicated with a "bubble" on the gate output.

4.19 SR Programmable Gate Properties

For many products a number of programmable SR Latches are added. They are configured by an appropriate version of PSL Editor (S1v2.14 version 5.0.0 or greater) where an SRQ icon features on the toolbar.

Each SR latch has a Q output. The Q output may be inverted in the PSL Editor under the SR Latch component properties window. The SR Latches may be configured as Standard (no input dominant), Set Dominant or Reset Dominant in the PSL Editor under the SR Latch component properties window. The truth table for the SR Latches is given below.

A **Programmable** SR gate can be selected to operate with these latch properties:

S input	R input	O - Standard	O – Set input dominant	O – Rest input dominant
0	0	0	0	0
0	1	0	0	0
1	0	1	1	1
1	1	0	1	1

Table 1 - SR programmable gate properties

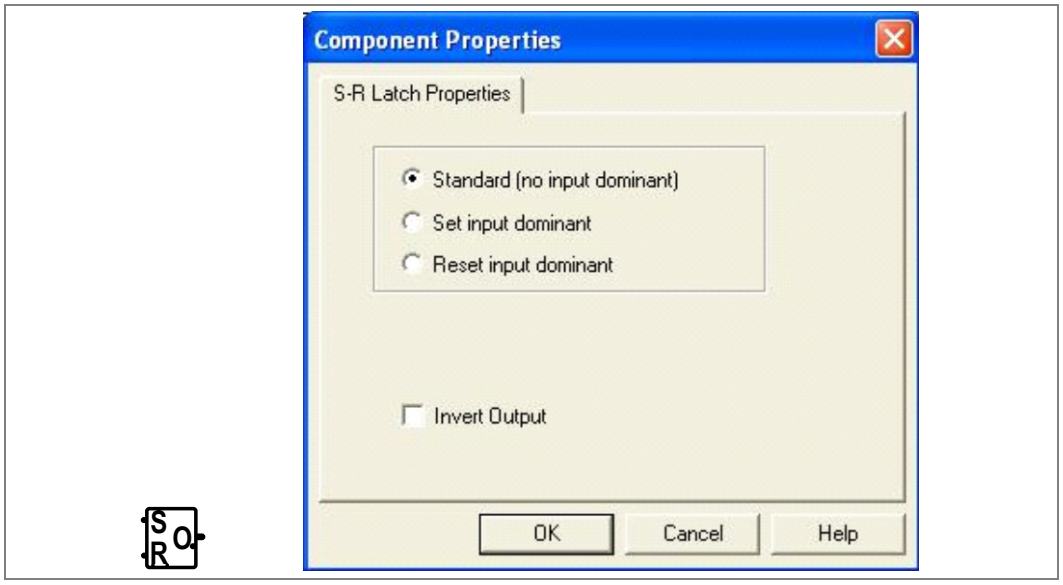

Figure 7 - SR latch component properties

Select if the output of the gate should be inverted using the Invert Output check box. An inverted output is indicated with a "bubble" on the gate output.

5 MAKING A RECORD OF MICOM PX40 DEVICE SETTINGS

5.1 Using MiCOM S1 Studio to Manage Device Settings

An engineer often needs to create a record of what settings have been applied to a device. In the past, they could have used paper printouts of all the available settings, and mark up the ones they had used. Keeping such a paper-based Settings Records could be time-consuming and prone to error (e.g. due to being settings written down incorrectly).

The MiCOM S1 Studio software lets you read from or write to MiCOM devices.

- **Extract** lets you download all the settings from a MiCOM Px40 device. A summary is given in Extract Settings from a MiCOM Px40 Device below.
- **Send** lets you send the settings you currently have open in MiCOM S1 Studio. A summary is given in Send Settings to a MiCOM Px40 Device below.

In most cases, it will be quicker and less error prone to extract settings electronically and store them in a settings file on a memory stick. In this way, there will be a digital record which is certain to be accurate. It is also possible to archive these settings files in a repository; so they can be used again or adapted for another use.

Full details of how to do these tasks is provided in the MiCOM S1 Studio help. A quick summary of the main steps is given below. In each case you need to make sure that:

- Your computer includes the MiCOM S1 Studio software.
- Your computer and the MiCOM device are powered on.
- You have used a suitable cable to connect your computer to the MiCOM device (Front Port, Rear Port, Ethernet port or Modem as available).

5.2 Extract Settings from a MiCOM Px40 Device

Full details of how to do this is provided in the MiCOM S1 Studio help.

As a quick guide, you need to do the following:

1. In MiCOM S1 Studio, click the Quick Connect… button.
2. Select the relevant Device Type in the Quick Connect dialog box.
3. Click the relevant port in the Port Selection dialog box.
4. Enter the relevant connection parameters in the Connection Parameters dialog box and click the Finish button
5. MiCOM S1 Studio will try to communicate with the Px40 device. It will display a connected message if the connection attempt is successful.
6. The device will appear in the Studio Explorer pane on the top-left hand side of the interface.
7. Click the + button to expand the options for the device, then click on the Settings folder.
8. Right-click on Settings and select the Extract Settings link to read the settings on the device and store them on your computer or a memory stick attached to your computer.
9. After retrieving the settings file, close the dialog box by clicking the Close button.

5.3 Send Settings to a MiCOM Px40 Device

Full details of how to do this is provided in the MiCOM S1 Studio help.

As a quick guide, you need to do the following:

1. In MiCOM S1 Studio, click the Quick Connect… button.
2. Select the relevant Device Type in the Quick Connect dialog box.
3. Click the relevant port in the Port Selection dialog box.
4. Enter the relevant connection parameters in the Connection Parameters dialog box and click the Finish button
5. MiCOM S1 Studio will try to communicate with the Px40 device. It will display a connected message if the connection attempt is successful.
6. The device will appear in the Studio Explorer pane on the top-left hand side of the interface.
7. Click the + button to expand the options for the device, then click on the Settings link.
8. Right-click on the device name and select the Send link.

Note	*When you send settings to a MiCOM Px40 device, the data is stored in a temporary location at first. This temporary data is tested to make sure it is complete. If the temporary data is complete, it will be programmed into the MiCOM Px40 device. This avoids the risk of a device being programmed with incomplete or corrupt settings.*

9. In the Send To dialog box, select the settings file(s) you wish to send, then click the Send button.
10. Close the the Send To dialog box by clicking the Close button.

PROGRAMMABLE LOGIC

CHAPTER 8

Date:	08/2015
Products covered by this chapter:	This chapter covers the specific versions of the MiCOM products listed below. This includes ***only*** the following combinations of Software Version and Hardware Suffix.
Hardware Suffix:	M
Software Version:	B0
Connection Diagrams:	10P849xx (xx = 01 to 06)

CONTENTS

TABLES

FIGURES

Notes:

1 OVERVIEW

The purpose of the Programmable Scheme Logic (PSL) is to allow the user to configure an individual protection scheme to suit their own particular application. This is achieved through the use of programmable logic gates and delay timers.

The input to the PSL is any combination of the status of opto inputs. It is also used to assign the mapping of functions to the opto inputs and output contacts, the outputs of the protection elements, e.g. protection starts and trips, and the outputs of the fixed protection scheme logic. The fixed scheme logic provides the relay's standard protection schemes.

The PSL itself consists of software logic gates and timers. The logic gates can be programmed to perform a range of different logic functions and can accept any number of inputs. The timers are used either to create a programmable delay, and/or to condition the logic outputs, e.g. to create a pulse of fixed duration on the output regardless of the length of the pulse on the input. The outputs of the PSL are the LEDs on the front panel of the relay and the output contacts at the rear.

The execution of the PSL logic is event driven; the logic is processed whenever any of its inputs change, for example as a result of a change in one of the digital input signals. Also, only the part of the PSL logic that is affected by the particular input change that has occurred is processed. This reduces the amount of processing time that is used by the PSL. This means that even with large, complex PSL schemes the device trip time will not lengthen.

This system provides flexibility for the user to create their own scheme logic design. It also means that the PSL can be configured into a very complex system, hence setting of the PSL is implemented through the PC support package MiCOM S1 Studio.

How to edit the PSL schemes is described in the "Using the PSL Editor" chapter.

This chapter contains details of the logic nodes which are specific to this product, together with any PSL diagrams which we have published for this product.

2 DESCRIPTION OF THE LOGIC NODES

The following table shows the available DDB Numbers, a Description of what they are and which products they apply to. Where a range of DDB Numbers apply to a consecutively-numbered range of related items, the DDB Number range is shown. For example, DDB No 0 to 11 to cover Output Relay 1 to Output Relay 11; or 2nd Harmonic A to C to cover 2nd Harmonic A, 2nd Harmonic B and 2nd Harmonic C).
If a DDB Number is not shown, it is not used in this range of products.

DDB No	Source	Description	English Text
0	SW	Output Relay 1	
1	SW	Output Relay 2	
2	SW	Output Relay 3	
3	SW	Output Relay 4	
4	SW	Output Relay 5	
5	SW	Output Relay 6	
6	SW	Output Relay 7	
7	SW	Output Relay 8	
8	SW	Output Relay 9	
9	SW	Output Relay 10	
10	SW	Output Relay 11	
11	SW	Output Relay 12	
12	SW	Output Relay 13	
13	SW	Output Relay 14	
14	SW	Output Relay 15	
15	SW	Output Relay 16	
16	SW	Output Relay 17	
17	SW	Output Relay 18	
18	SW	Output Relay 19	
19	SW	Output Relay 20	
20	SW	Output Relay 21	
21	SW	Output Relay 22	
22	SW	Output Relay 23	
23	SW	Output Relay 24	
24	SW	Output Relay 25	
25	SW	Output Relay 26	
26	SW	Output Relay 27	
27	SW	Output Relay 28	
28	SW	Output Relay 29	
29	SW	Output Relay 30	
30	SW	Output Relay 31	
31	SW	Output Relay 32	
32	SW	Output Relay 33	
33	SW	Output Relay 34	
34	SW	Output Relay 35	
35	SW	Output Relay 36	
36	SW	Output Relay 37	
37	SW	Output Relay 38	

DDB No	Source	Description	English Text
38	SW	Output Relay 39	
39	SW	Output Relay 40	
40	SW	Output Relay 41	
41	SW	Output Relay 42	
42	SW	Output Relay 43	
43	SW	Output Relay 44	
44	SW	Output Relay 45	
45	SW	Output Relay 46	
46	SW	Output Relay 47	
47	SW	Output Relay 48	
48	SW	Output Relay 49	
49	SW	Output Relay 50	
50	SW	Output Relay 51	
51	SW	Output Relay 52	
52	SW	Output Relay 53	
53	SW	Output Relay 54	
54	SW	Output Relay 55	
55	SW	Output Relay 56	
56	SW	Output Relay 57	
57	SW	Output Relay 58	
58	SW	Output Relay 59	
59	SW	Output Relay 60	
60	SW	DDB_UNUSED	
61	SW	DDB_UNUSED	
62	SW	DDB_UNUSED	
63	SW	DDB_UNUSED	
64	SW	Opto Isolator Input 1	
65	SW	Opto Isolator Input 2	
66	SW	Opto Isolator Input 3	
67	SW	Opto Isolator Input 4	
68	SW	Opto Isolator Input 5	
69	SW	Opto Isolator Input 6	
70	SW	Opto Isolator Input 7	
71	SW	Opto Isolator Input 8	
72	SW	Opto Isolator Input 9	
73	SW	Opto Isolator Input 10	
74	SW	Opto Isolator Input 11	
75	SW	Opto Isolator Input 12	
76	SW	Opto Isolator Input 13	
77	SW	Opto Isolator Input 14	
78	SW	Opto Isolator Input 15	
79	SW	Opto Isolator Input 16	
80	SW	Opto Isolator Input 17	
81	SW	Opto Isolator Input 18	

DDB No	Source	Description	English Text
82	SW	Opto Isolator Input 19	
83	SW	Opto Isolator Input 20	
84	SW	Opto Isolator Input 21	
85	SW	Opto Isolator Input 22	
86	SW	Opto Isolator Input 23	
87	SW	Opto Isolator Input 24	
88	SW	Opto Isolator Input 25	
89	SW	Opto Isolator Input 26	
90	SW	Opto Isolator Input 27	
91	SW	Opto Isolator Input 28	
92	SW	Opto Isolator Input 29	
93	SW	Opto Isolator Input 30	
94	SW	Opto Isolator Input 31	
95	SW	Opto Isolator Input 32	
96	SW	Opto Isolator Input 33	
97	SW	Opto Isolator Input 34	
98	SW	Opto Isolator Input 35	
99	SW	Opto Isolator Input 36	
100	SW	Opto Isolator Input 37	
101	SW	Opto Isolator Input 38	
102	SW	Opto Isolator Input 39	
103	SW	Opto Isolator Input 40	
104	SW	Opto Isolator Input 41	
105	SW	Opto Isolator Input 42	
106	SW	Opto Isolator Input 43	
107	SW	Opto Isolator Input 44	
108	SW	Opto Isolator Input 45	
109	SW	Opto Isolator Input 46	
110	SW	Opto Isolator Input 47	
111	SW	Opto Isolator Input 48	
112	SW	Opto Isolator Input 49	
113	SW	Opto Isolator Input 50	
114	SW	Opto Isolator Input 51	
115	SW	Opto Isolator Input 52	
116	SW	Opto Isolator Input 53	
117	SW	Opto Isolator Input 54	
118	SW	Opto Isolator Input 55	
119	SW	Opto Isolator Input 56	
120	SW	Opto Isolator Input 57	
121	SW	Opto Isolator Input 58	
122	SW	Opto Isolator Input 59	
123	SW	Opto Isolator Input 60	
124	SW	Opto Isolator Input 61	
125	SW	Opto Isolator Input 62	

DDB No	Source	Description	English Text
126	SW	Opto Isolator Input 63	
127	SW	Opto Isolator Input 64	
128	PSL	Relay Conditioner 1	Relay Cond 1
129	PSL	Relay Conditioner 2	Relay Cond 2
130	PSL	Relay Conditioner 3	Relay Cond 3
131	PSL	Relay Conditioner 4	Relay Cond 4
132	PSL	Relay Conditioner 5	Relay Cond 5
133	PSL	Relay Conditioner 6	Relay Cond 6
134	PSL	Relay Conditioner 7	Relay Cond 7
135	PSL	Relay Conditioner 8	Relay Cond 8
136	PSL	Relay Conditioner 9	Relay Cond 9
137	PSL	Relay Conditioner 10	Relay Cond 10
138	PSL	Relay Conditioner 11	Relay Cond 11
139	PSL	Relay Conditioner 12	Relay Cond 12
140	PSL	Relay Conditioner 13	Relay Cond 13
141	PSL	Relay Conditioner 14	Relay Cond 14
142	PSL	Relay Conditioner 15	Relay Cond 15
143	PSL	Relay Conditioner 16	Relay Cond 16
144	PSL	Relay Conditioner 17	Relay Cond 17
145	PSL	Relay Conditioner 18	Relay Cond 18
146	PSL	Relay Conditioner 19	Relay Cond 19
147	PSL	Relay Conditioner 20	Relay Cond 20
148	PSL	Relay Conditioner 21	Relay Cond 21
149	PSL	Relay Conditioner 22	Relay Cond 22
150	PSL	Relay Conditioner 23	Relay Cond 23
151	PSL	Relay Conditioner 24	Relay Cond 24
152	PSL	Relay Conditioner 25	Relay Cond 25
153	PSL	Relay Conditioner 26	Relay Cond 26
154	PSL	Relay Conditioner 27	Relay Cond 27
155	PSL	Relay Conditioner 28	Relay Cond 28
156	PSL	Relay Conditioner 29	Relay Cond 29
157	PSL	Relay Conditioner 30	Relay Cond 30
158	PSL	Relay Conditioner 31	Relay Cond 31
159	PSL	Relay Conditioner 32	Relay Cond 32
160	PSL	Relay Conditioner 33	Relay Cond 33
161	PSL	Relay Conditioner 34	Relay Cond 34
162	PSL	Relay Conditioner 35	Relay Cond 35
163	PSL	Relay Conditioner 36	Relay Cond 36
164	PSL	Relay Conditioner 37	Relay Cond 37
165	PSL	Relay Conditioner 38	Relay Cond 38
166	PSL	Relay Conditioner 39	Relay Cond 39
167	PSL	Relay Conditioner 40	Relay Cond 40
168	PSL	Relay Conditioner 41	Relay Cond 41
169	PSL	Relay Conditioner 42	Relay Cond 42

DDB No	Source	Description	English Text
170	PSL	Relay Conditioner 43	Relay Cond 43
171	PSL	Relay Conditioner 44	Relay Cond 44
172	PSL	Relay Conditioner 45	Relay Cond 45
173	PSL	Relay Conditioner 46	Relay Cond 46
174	PSL	Relay Conditioner 47	Relay Cond 47
175	PSL	Relay Conditioner 48	Relay Cond 48
176	PSL	Relay Conditioner 49	Relay Cond 49
177	PSL	Relay Conditioner 50	Relay Cond 50
178	PSL	Relay Conditioner 51	Relay Cond 51
179	PSL	Relay Conditioner 52	Relay Cond 52
180	PSL	Relay Conditioner 53	Relay Cond 53
181	PSL	Relay Conditioner 54	Relay Cond 54
182	PSL	Relay Conditioner 55	Relay Cond 55
183	PSL	Relay Conditioner 56	Relay Cond 56
184	PSL	Relay Conditioner 57	Relay Cond 57
185	PSL	Relay Conditioner 58	Relay Cond 58
186	PSL	Relay Conditioner 59	Relay Cond 59
187	PSL	Relay Conditioner 60	Relay Cond 60
188	SW	DDB_UNUSED	
189	SW	DDB_UNUSED	
190	SW	DDB_UNUSED	
191	SW	DDB_UNUSED	
192	SW	Tri-LED - 1 - Red	LED1 Red
193	SW	Tri-LED - 1 - Green	LED1 Grn
194	SW	Tri-LED - 2 - Red	LED2 Red
195	SW	Tri-LED - 2 - Green	LED2 Grn
196	SW	Tri-LED - 3 - Red	LED3 Red
197	SW	Tri-LED - 3 - Green	LED3 Grn
198	SW	Tri-LED - 4 - Red	LED4 Red
199	SW	Tri-LED - 4 - Green	LED4 Grn
200	SW	Tri-LED - 5 - Red	LED5 Red
201	SW	Tri-LED - 5 - Green	LED5 Grn
202	SW	Tri-LED - 6 - Red	LED6 Red
203	SW	Tri-LED - 6 - Green	LED6 Grn
204	SW	Tri-LED - 7 - Red	LED7 Red
205	SW	Tri-LED - 7 - Green	LED7 Grn
206	SW	Tri-LED - 8 - Red	LED8 Red
207	SW	Tri-LED - 8 - Green	LED8 Grn
208	SW	Tri-LED - 9 - Red	FnKey LED1 Red
209	SW	Tri-LED - 9 - Green	FnKey LED1 Grn
210	SW	Tri-LED - 10 - Red	FnKey LED2 Red
211	SW	Tri-LED - 10 - Green	FnKey LED2 Grn
212	SW	Tri-LED - 11 - Red	FnKey LED3 Red
213	SW	Tri-LED - 11 - Green	FnKey LED3 Grn

DDB No	Source	Description	English Text
214	SW	Tri-LED - 12 - Red	FnKey LED4 Red
215	SW	Tri-LED - 12 - Green	FnKey LED4 Grn
216	SW	Tri-LED - 13 - Red	FnKey LED5 Red
217	SW	Tri-LED - 13 - Green	FnKey LED5 Grn
218	SW	Tri-LED - 14 - Red	FnKey LED6 Red
219	SW	Tri-LED - 14 - Green	FnKey LED6 Grn
220	SW	Tri-LED - 15 - Red	FnKey LED7 Red
221	SW	Tri-LED - 15 - Green	FnKey LED7 Grn
222	SW	Tri-LED - 16 - Red	FnKey LED8 Red
223	SW	Tri-LED - 16 - Green	FnKey LED8 Grn
224	SW	Tri-LED - 17 - Red	FnKey LED9 Red
225	SW	Tri-LED - 17 - Green	FnKey LED9 Grn
226	SW	Tri-LED - 18 - Red	FnKey LED10 Red
227	SW	Tri-LED - 18 - Green	FnKey LED10 Grn
228 to 255	SW	DDB_UNUSED	
256	PSL	Tri-LED Conditioner - 1 - Red	LED1 Con R
257	PSL	Tri-LED Conditioner- 1 - Green	LED1 Con G
258	PSL	Tri-LED Conditioner - 2 - Red	LED2 Con R
259	PSL	Tri-LED Conditioner - 2 - Green	LED2 Con G
260	PSL	Tri-LED Conditioner - 3 - Red	LED3 Con R
261	PSL	Tri-LED Conditioner - 3 - Green	LED3 Con G
262	PSL	Tri-LED Conditioner - 4 - Red	LED4 Con R
263	PSL	Tri-LED Conditioner - 4 - Green	LED4 Con G
264	PSL	Tri-LED Conditioner - 5 - Red	LED5 Con R
265	PSL	Tri-LED Conditioner - 5 - Green	LED5 Con G
266	PSL	Tri-LED Conditioner - 6 - Red	LED6 Con R
267	PSL	Tri-LED Conditioner - 6 - Green	LED6 Con G
268	PSL	Tri-LED Conditioner - 7 - Red	LED7 Con R
269	PSL	Tri-LED Conditioner - 7 - Green	LED7 Con G
270	PSL	Tri-LED Conditioner - 8 - Red	LED8 Con R
271	PSL	Tri-LED Conditioner - 8 - Green	LED8 Con G
272	PSL	Tri-LED Conditioner - 9 - Red	FnKey LED1 ConR
273	PSL	Tri-LED Conditioner - 9 - Green	FnKey LED1 ConG
274	PSL	Tri-LED Conditioner - 10 - Red	FnKey LED2 ConR
275	PSL	Tri-LED Conditioner - 10 - Green	FnKey LED2 ConG
276	PSL	Tri-LED Conditioner - 11 - Red	FnKey LED3 ConR
277	PSL	Tri-LED Conditioner - 11 - Green	FnKey LED3 ConG
278	PSL	Tri-LED Conditioner - 12 - Red	FnKey LED4 ConR
279	PSL	Tri-LED Conditioner - 12 - Green	FnKey LED4 ConG
280	PSL	Tri-LED Conditioner - 13 - Red	FnKey LED5 ConR
281	PSL	Tri-LED Conditioner - 13 - Green	FnKey LED5 ConG
282	PSL	Tri-LED Conditioner - 14 - Red	FnKey LED6 ConR
283	PSL	Tri-LED Conditioner - 14 - Green	FnKey LED6 ConG
284	PSL	Tri-LED Conditioner - 15 - Red	FnKey LED7 ConR

DDB No	Source	Description	English Text
285	PSL	Tri-LED Conditioner - 15 - Green	FnKey LED7 ConG
286	PSL	Tri-LED Conditioner - 16 - Red	FnKey LED8 ConR
287	PSL	Tri-LED Conditioner - 16 - Green	FnKey LED8 ConG
288	PSL	Tri-LED Conditioner - 17 - Red	FnKey LED9 ConR
289	PSL	Tri-LED Conditioner - 17 - Green	FnKey LED9 ConG
290	PSL	Tri-LED Conditioner - 18 - Red	FnKey LED10 ConR
291	PSL	Tri-LED Conditioner - 18 - Green	FnKey LED10 ConG
292 to 319	SW	DDB_UNUSED	
320	SW	Function Key 1	Function Key 1
321	SW	Function Key 2	Function Key 2
322	SW	Function Key 3	Function Key 3
323	SW	Function Key 4	Function Key 4
324	SW	Function Key 5	Function Key 5
325	SW	Function Key 6	Function Key 6
326	SW	Function Key 7	Function Key 7
327	SW	Function Key 8	Function Key 8
328	SW	Function Key 9	Function Key 9
329	SW	Function Key 10	Function Key 10
330 to 351	SW	DDB_UNUSED	
352	PSL	Auxiliary Timer in 1	Timer in 1
353	PSL	Auxiliary Timer in 2	Timer in 2
354	PSL	Auxiliary Timer in 3	Timer in 3
355	PSL	Auxiliary Timer in 4	Timer in 4
356	PSL	Auxiliary Timer in 5	Timer in 5
357	PSL	Auxiliary Timer in 6	Timer in 6
358	PSL	Auxiliary Timer in 7	Timer in 7
359	PSL	Auxiliary Timer in 8	Timer in 8
360	PSL	Auxiliary Timer in 9	Timer in 9
361	PSL	Auxiliary Timer in 10	Timer in 10
362	PSL	Auxiliary Timer in 11	Timer in 11
363	PSL	Auxiliary Timer in 12	Timer in 12
364	PSL	Auxiliary Timer in 13	Timer in 13
365	PSL	Auxiliary Timer in 14	Timer in 14
366	PSL	Auxiliary Timer in 15	Timer in 15
367	PSL	Auxiliary Timer in 16	Timer in 16
368	SW	Auxiliary Timer out 1	Timer out 1
369	SW	Auxiliary Timer out 2	Timer out 2
370	SW	Auxiliary Timer out 3	Timer out 3
371	SW	Auxiliary Timer out 4	Timer out 4
372	SW	Auxiliary Timer out 5	Timer out 5
373	SW	Auxiliary Timer out 6	Timer out 6
374	SW	Auxiliary Timer out 7	Timer out 7
375	SW	Auxiliary Timer out 8	Timer out 8
376	SW	Auxiliary Timer out 9	Timer out 9

DDB No	Source	Description	English Text
377	SW	Auxiliary Timer out 10	Timer out 10
378	SW	Auxiliary Timer out 11	Timer out 11
379	SW	Auxiliary Timer out 12	Timer out 12
380	SW	Auxiliary Timer out 13	Timer out 13
381	SW	Auxiliary Timer out 14	Timer out 14
382	SW	Auxiliary Timer out 15	Timer out 15
383	SW	Auxiliary Timer out 16	Timer out 16
384	SW	DDB_UNUSED	
385	SW	DDB_UNUSED	
386	SW	Setting Group via opto invalid	SG-opto Invalid
387	SW	Test Mode Enabled	Blocked/faulty
388 to 408	SW	DDB_UNUSED	
409	PSL	User definable Self Reset Alarm 1	SR User Alarm 1
410	PSL	User definable Self Reset Alarm 2	SR User Alarm 2
411	PSL	User definable Self Reset Alarm 3	SR User Alarm 3
412	PSL	User definable Self Reset Alarm 4	SR User Alarm 4
413	PSL	User definable Self Reset Alarm 5	SR User Alarm 5
414	PSL	User definable Self Reset Alarm 6	SR User Alarm 6
415	PSL	User definable Self Reset Alarm 7	SR User Alarm 7
416	PSL	User definable Self Reset Alarm 8	SR User Alarm 8
417	PSL	User definable Self Reset Alarm 9	SR User Alarm 9
418	PSL	User definable Self Reset Alarm 10	SR User Alarm 10
419	PSL	User definable Self Reset Alarm 11	SR User Alarm 11
420	PSL	User definable Self Reset Alarm 12	SR User Alarm 12
421	PSL	User definable Self Reset Alarm 13	SR User Alarm 13
422	PSL	User definable Self Reset Alarm 14	SR User Alarm 14
423	PSL	User definable Self Reset Alarm 15	SR User Alarm 15
424	PSL	User definable Self Reset Alarm 16	SR User Alarm 16
425	PSL	User definable Self Reset Alarm 17	SR User Alarm 17
426	PSL	User definable Manual Reset Alarm 18	MR User Alarm 18
427	PSL	User definable Manual Reset Alarm 19	MR User Alarm 19
428	PSL	User definable Manual Reset Alarm 20	MR User Alarm 20
429	PSL	User definable Manual Reset Alarm 21	MR User Alarm 21
430	PSL	User definable Manual Reset Alarm 22	MR User Alarm 22
431	PSL	User definable Manual Reset Alarm 23	MR User Alarm 23
432	PSL	User definable Manual Reset Alarm 24	MR User Alarm 24
433	PSL	User definable Manual Reset Alarm 25	MR User Alarm 25
434	PSL	User definable Manual Reset Alarm 26	MR User Alarm 26
435	PSL	User definable Manual Reset Alarm 27	MR User Alarm 27
436	PSL	User definable Manual Reset Alarm 28	MR User Alarm 28
437	PSL	User definable Manual Reset Alarm 29	MR User Alarm 29
438	PSL	User definable Manual Reset Alarm 30	MR User Alarm 30
439	PSL	User definable Manual Reset Alarm 31	MR User Alarm 31
440	PSL	User definable Manual Reset Alarm 32	MR User Alarm 32

DDB No	Source	Description	English Text
441	PSL	User definable Manual Reset Alarm 33	MR User Alarm 33
442	PSL	User definable Manual Reset Alarm 34	MR User Alarm 34
443	PSL	User definable Manual Reset Alarm 35	MR User Alarm 35
444 to 447	SW	DDB_UNUSED	
448	SW	Battery Failure Alarm	Battery Fail
449	SW	Field Voltage Failure	Field volts fail
450	SW	Rear Comms Failed	Rear Comm 2 Fail
451	SW	GOOSE IED Absent Alarm	GOOSE IED Absent
452	SW	Ethernet card not fitted Alarm	NIC Not Fitted
453	SW	Ethernet card not responding Alarm	NIC No Response
454	SW	Ethernet card fatal error Alarm	NIC Fatal Error
455	SW	Ethernet card software reload Alarm	NIC Soft. Reload
456	SW	Bad TCP/IP Configuration Alarm	Bad TCP/IP Cfg.
457	SW	Bad OSI Configuration Alarm	Bad OSI Config.
458	SW	If this location DST is in effect now	DST status
459	SW	Main card/Ethernet card software mismatch Alarm	NIC SW Mis-Match
460	SW	IP Address conflict Alarm	IP Addr Conflict
461	SW	InterMiCOM Loopback Fail	IM Loopback
462	SW	InterMiCOM Message Fail	IM Msg Fail
463	SW	InterMiCOM Data CD Fail	IM DCD Fail
464	SW	InterMiCOM Channel Fail	IM Chan Fail
465	SW	Backup settings in use' Alarm	Backup Setting
466	SW	Invalid IEC 61850 Configuration Alarm	Invalid Config.
467	SW	Test Mode Activated Alarm	Test Mode Alm
468	SW	Contacts Blocked Alarm	Contacts Blk Alm
469 to 511	SW	DDB_UNUSED	
512	SW	User Control 1	Control Input 1
513	SW	User Control 2	Control Input 2
514	SW	User Control 3	Control Input 3
515	SW	User Control 4	Control Input 4
516	SW	User Control 5	Control Input 5
517	SW	User Control 6	Control Input 6
518	SW	User Control 7	Control Input 7
519	SW	User Control 8	Control Input 8
520	SW	User Control 9	Control Input 9
521	SW	User Control 10	Control Input 10
522	SW	User Control 11	Control Input 11
523	SW	User Control 12	Control Input 12
524	SW	User Control 13	Control Input 13
525	SW	User Control 14	Control Input 14
526	SW	User Control 15	Control Input 15
527	SW	User Control 16	Control Input 16
528	SW	User Control 17	Control Input 17
529	SW	User Control 18	Control Input 18

DDB No	Source	Description	English Text
530	SW	User Control 19	Control Input 19
531	SW	User Control 20	Control Input 20
532	SW	User Control 21	Control Input 21
533	SW	User Control 22	Control Input 22
534	SW	User Control 23	Control Input 23
535	SW	User Control 24	Control Input 24
536	SW	User Control 25	Control Input 25
537	SW	User Control 26	Control Input 26
538	SW	User Control 27	Control Input 27
539	SW	User Control 28	Control Input 28
540	SW	User Control 29	Control Input 29
541	SW	User Control 30	Control Input 30
542	SW	User Control 31	Control Input 31
543	SW	User Control 32	Control Input 32
544 to 575	SW	DDB_UNUSED	
576	SW	InterMiCOM in 1	InterMiCOM in 1
577	SW	InterMiCOM in 2	InterMiCOM in 2
578	SW	InterMiCOM in 3	InterMiCOM in 3
579	SW	InterMiCOM in 4	InterMiCOM in 4
580	SW	InterMiCOM in 5	InterMiCOM in 5
581	SW	InterMiCOM in 6	InterMiCOM in 6
582	SW	InterMiCOM in 7	InterMiCOM in 7
583	SW	InterMiCOM in 8	InterMiCOM in 8
584	PSL	InterMiCOM out 1	InterMiCOM out 1
585	PSL	InterMiCOM out 2	InterMiCOM out 2
586	PSL	InterMiCOM out 3	InterMiCOM out 3
587	PSL	InterMiCOM out 4	InterMiCOM out 4
588	PSL	InterMiCOM out 5	InterMiCOM out 5
589	PSL	InterMiCOM out 6	InterMiCOM out 6
590	PSL	InterMiCOM out 7	InterMiCOM out 7
591	PSL	InterMiCOM out 8	InterMiCOM out 8
592 to 607	SW	DDB_UNUSED	
608	PSL	Virtual Output 01	Virtual Output 1
609	PSL	Virtual Output 02	Virtual Output 2
610	PSL	Virtual Output 03	Virtual Output 3
611	PSL	Virtual Output 04	Virtual Output 4
612	PSL	Virtual Output 05	Virtual Output 5
613	PSL	Virtual Output 06	Virtual Output 6
614	PSL	Virtual Output 07	Virtual Output 7
615	PSL	Virtual Output 08	Virtual Output 8
616	PSL	Virtual Output 09	Virtual Output 9
617	PSL	Virtual Output 10	Virtual Output10
618	PSL	Virtual Output 11	Virtual Output11
619	PSL	Virtual Output 12	Virtual Output12

DDB No	Source	Description	English Text
620	PSL	Virtual Output 13	Virtual Output13
621	PSL	Virtual Output 14	Virtual Output14
622	PSL	Virtual Output 15	Virtual Output15
623	PSL	Virtual Output 16	Virtual Output16
624	PSL	Virtual Output 17	Virtual Output17
625	PSL	Virtual Output 18	Virtual Output18
626	PSL	Virtual Output 19	Virtual Output19
627	PSL	Virtual Output 20	Virtual Output20
628	PSL	Virtual Output 21	Virtual Output21
629	PSL	Virtual Output 22	Virtual Output22
630	PSL	Virtual Output 23	Virtual Output23
631	PSL	Virtual Output 24	Virtual Output24
632	PSL	Virtual Output 25	Virtual Output25
633	PSL	Virtual Output 26	Virtual Output26
634	PSL	Virtual Output 27	Virtual Output27
635	PSL	Virtual Output 28	Virtual Output28
636	PSL	Virtual Output 29	Virtual Output29
637	PSL	Virtual Output 30	Virtual Output30
638	PSL	Virtual Output 31	Virtual Output31
639	PSL	Virtual Output 32	Virtual Output32
640	PSL	Virtual Output 33	Virtual Output33
641	PSL	Virtual Output 34	Virtual Output34
642	PSL	Virtual Output 35	Virtual Output35
643	PSL	Virtual Output 36	Virtual Output36
644	PSL	Virtual Output 37	Virtual Output37
645	PSL	Virtual Output 38	Virtual Output38
646	PSL	Virtual Output 39	Virtual Output39
647	PSL	Virtual Output 40	Virtual Output40
648	PSL	Virtual Output 41	Virtual Output41
649	PSL	Virtual Output 42	Virtual Output42
650	PSL	Virtual Output 43	Virtual Output43
651	PSL	Virtual Output 44	Virtual Output44
652	PSL	Virtual Output 45	Virtual Output45
653	PSL	Virtual Output 46	Virtual Output46
654	PSL	Virtual Output 47	Virtual Output47
655	PSL	Virtual Output 48	Virtual Output48
656	PSL	Virtual Output 49	Virtual Output49
657	PSL	Virtual Output 50	Virtual Output50
658	PSL	Virtual Output 51	Virtual Output51
659	PSL	Virtual Output 52	Virtual Output52
660	PSL	Virtual Output 53	Virtual Output53
661	PSL	Virtual Output 54	Virtual Output54
662	PSL	Virtual Output 55	Virtual Output55
663	PSL	Virtual Output 56	Virtual Output56

DDB No	Source	Description	English Text
664	PSL	Virtual Output 57	Virtual Output57
665	PSL	Virtual Output 58	Virtual Output58
666	PSL	Virtual Output 59	Virtual Output59
667	PSL	Virtual Output 60	Virtual Output60
668	PSL	Virtual Output 61	Virtual Output61
669	PSL	Virtual Output 62	Virtual Output62
670	PSL	Virtual Output 63	Virtual Output63
671	PSL	Virtual Output 64	Virtual Output64
672 to 735	SW	DDB_UNUSED	
736	SW		Virtual Input 1
737	SW		Virtual Input 2
738	SW		Virtual Input 3
739	SW		Virtual Input 4
740	SW		Virtual Input 5
741	SW		Virtual Input 6
742	SW		Virtual Input 7
743	SW		Virtual Input 8
744	SW		Virtual Input 9
745	SW		Virtual Input 10
746	SW		Virtual Input 11
747	SW		Virtual Input 12
748	SW		Virtual Input 13
749	SW		Virtual Input 14
750	SW		Virtual Input 15
751	SW		Virtual Input 16
752	SW		Virtual Input 17
753	SW		Virtual Input 18
754	SW		Virtual Input 19
755	SW		Virtual Input 20
756	SW		Virtual Input 21
757	SW		Virtual Input 22
758	SW		Virtual Input 23
759	SW		Virtual Input 24
760	SW		Virtual Input 25
761	SW		Virtual Input 26
762	SW		Virtual Input 27
763	SW		Virtual Input 28
764	SW		Virtual Input 29
765	SW		Virtual Input 30
766	SW		Virtual Input 31
767	SW		Virtual Input 32
768	SW		Virtual Input 33
769	SW		Virtual Input 34
770	SW		Virtual Input 35

DDB No	Source	Description	English Text
771	SW		Virtual Input 36
772	SW		Virtual Input 37
773	SW		Virtual Input 38
774	SW		Virtual Input 39
775	SW		Virtual Input 40
776	SW		Virtual Input 41
777	SW		Virtual Input 42
778	SW		Virtual Input 43
779	SW		Virtual Input 44
780	SW		Virtual Input 45
781	SW		Virtual Input 46
782	SW		Virtual Input 47
783	SW		Virtual Input 48
784	SW		Virtual Input 49
785	SW		Virtual Input 50
786	SW		Virtual Input 51
787	SW		Virtual Input 52
788	SW		Virtual Input 53
789	SW		Virtual Input 54
790	SW		Virtual Input 55
791	SW		Virtual Input 56
792	SW		Virtual Input 57
793	SW		Virtual Input 58
794	SW		Virtual Input 59
795	SW		Virtual Input 60
796	SW		Virtual Input 61
797	SW		Virtual Input 62
798	SW		Virtual Input 63
799	SW		Virtual Input 64
800	SW		Virtual Input 65
801	SW		Virtual Input 66
802	SW		Virtual Input 67
803	SW		Virtual Input 68
804	SW		Virtual Input 69
805	SW		Virtual Input 70
806	SW		Virtual Input 71
807	SW		Virtual Input 72
808	SW		Virtual Input 73
809	SW		Virtual Input 74
810	SW		Virtual Input 75
811	SW		Virtual Input 76
812	SW		Virtual Input 77
813	SW		Virtual Input 78
814	SW		Virtual Input 79

DDB No	Source	Description	English Text
815	SW		Virtual Input 80
816	SW		Virtual Input 81
817	SW		Virtual Input 82
818	SW		Virtual Input 83
819	SW		Virtual Input 84
820	SW		Virtual Input 85
821	SW		Virtual Input 86
822	SW		Virtual Input 87
823	SW		Virtual Input 88
824	SW		Virtual Input 89
825	SW		Virtual Input 90
826	SW		Virtual Input 91
827	SW		Virtual Input 92
828	SW		Virtual Input 93
829	SW		Virtual Input 94
830	SW		Virtual Input 95
831	SW		Virtual Input 96
832	SW		Virtual Input 97
833	SW		Virtual Input 98
834	SW		Virtual Input 99
835	SW		Virtual Input100
836	SW		Virtual Input101
837	SW		Virtual Input102
838	SW		Virtual Input103
839	SW		Virtual Input104
840	SW		Virtual Input105
841	SW		Virtual Input106
842	SW		Virtual Input107
843	SW		Virtual Input108
844	SW		Virtual Input109
845	SW		Virtual Input110
846	SW		Virtual Input111
847	SW		Virtual Input112
848	SW		Virtual Input113
849	SW		Virtual Input114
850	SW		Virtual Input115
851	SW		Virtual Input116
852	SW		Virtual Input117
853	SW		Virtual Input118
854	SW		Virtual Input119
855	SW		Virtual Input120
856	SW		Virtual Input121
857	SW		Virtual Input122
858	SW		Virtual Input123

DDB No	Source	Description	English Text
859	SW		Virtual Input124
860	SW		Virtual Input125
861	SW		Virtual Input126
862	SW		Virtual Input127
863	SW		Virtual Input128
864	SW	GOOSE Virtual input 1 publisher bit	PubPres VIP 1
865	SW	GOOSE Virtual input 2 publisher bit	PubPres VIP 2
866	SW	GOOSE Virtual input 3 publisher bit	PubPres VIP 3
867	SW	GOOSE Virtual input 4 publisher bit	PubPres VIP 4
868	SW	GOOSE Virtual input 5 publisher bit	PubPres VIP 5
869	SW	GOOSE Virtual input 6 publisher bit	PubPres VIP 6
870	SW	GOOSE Virtual input 7 publisher bit	PubPres VIP 7
871	SW	GOOSE Virtual input 8 publisher bit	PubPres VIP 8
872	SW	GOOSE Virtual input 9 publisher bit	PubPres VIP 9
873	SW	GOOSE Virtual input 10 publisher bit	PubPres VIP 10
874	SW	GOOSE Virtual input 11 publisher bit	PubPres VIP 11
875	SW	GOOSE Virtual input 12 publisher bit	PubPres VIP 12
876	SW	GOOSE Virtual input 13 publisher bit	PubPres VIP 13
877	SW	GOOSE Virtual input 14 publisher bit	PubPres VIP 14
878	SW	GOOSE Virtual input 15 publisher bit	PubPres VIP 15
879	SW	GOOSE Virtual input 16 publisher bit	PubPres VIP 16
880	SW	GOOSE Virtual input 17 publisher bit	PubPres VIP 17
881	SW	GOOSE Virtual input 18 publisher bit	PubPres VIP 18
882	SW	GOOSE Virtual input 19 publisher bit	PubPres VIP 19
883	SW	GOOSE Virtual input 20 publisher bit	PubPres VIP 20
884	SW	GOOSE Virtual input 21 publisher bit	PubPres VIP 21
885	SW	GOOSE Virtual input 22 publisher bit	PubPres VIP 22
886	SW	GOOSE Virtual input 23 publisher bit	PubPres VIP 23
887	SW	GOOSE Virtual input 24 publisher bit	PubPres VIP 24
888	SW	GOOSE Virtual input 25 publisher bit	PubPres VIP 25
889	SW	GOOSE Virtual input 26 publisher bit	PubPres VIP 26
890	SW	GOOSE Virtual input 27 publisher bit	PubPres VIP 27
891	SW	GOOSE Virtual input 28 publisher bit	PubPres VIP 28
892	SW	GOOSE Virtual input 29 publisher bit	PubPres VIP 29
893	SW	GOOSE Virtual input 30 publisher bit	PubPres VIP 30
894	SW	GOOSE Virtual input 31 publisher bit	PubPres VIP 31
895	SW	GOOSE Virtual input 32 publisher bit	PubPres VIP 32
896	SW	GOOSE Virtual input 33 publisher bit	PubPres VIP 33
897	SW	GOOSE Virtual input 34 publisher bit	PubPres VIP 34
898	SW	GOOSE Virtual input 35 publisher bit	PubPres VIP 35
899	SW	GOOSE Virtual input 36 publisher bit	PubPres VIP 36
900	SW	GOOSE Virtual input 37 publisher bit	PubPres VIP 37
901	SW	GOOSE Virtual input 38 publisher bit	PubPres VIP 38
902	SW	GOOSE Virtual input 39 publisher bit	PubPres VIP 39

DDB No	Source	Description	English Text
903	SW	GOOSE Virtual input 40 publisher bit	PubPres VIP 40
904	SW	GOOSE Virtual input 41 publisher bit	PubPres VIP 41
905	SW	GOOSE Virtual input 42 publisher bit	PubPres VIP 42
906	SW	GOOSE Virtual input 43 publisher bit	PubPres VIP 43
907	SW	GOOSE Virtual input 44 publisher bit	PubPres VIP 44
908	SW	GOOSE Virtual input 45 publisher bit	PubPres VIP 45
909	SW	GOOSE Virtual input 46 publisher bit	PubPres VIP 46
910	SW	GOOSE Virtual input 47 publisher bit	PubPres VIP 47
911	SW	GOOSE Virtual input 48 publisher bit	PubPres VIP 48
912	SW	GOOSE Virtual input 49 publisher bit	PubPres VIP 49
913	SW	GOOSE Virtual input 50 publisher bit	PubPres VIP 50
914	SW	GOOSE Virtual input 51 publisher bit	PubPres VIP 51
915	SW	GOOSE Virtual input 52 publisher bit	PubPres VIP 52
916	SW	GOOSE Virtual input 53 publisher bit	PubPres VIP 53
917	SW	GOOSE Virtual input 54 publisher bit	PubPres VIP 54
918	SW	GOOSE Virtual input 55 publisher bit	PubPres VIP 55
919	SW	GOOSE Virtual input 56 publisher bit	PubPres VIP 56
920	SW	GOOSE Virtual input 57 publisher bit	PubPres VIP 57
921	SW	GOOSE Virtual input 58 publisher bit	PubPres VIP 58
922	SW	GOOSE Virtual input 59 publisher bit	PubPres VIP 59
923	SW	GOOSE Virtual input 60 publisher bit	PubPres VIP 60
924	SW	GOOSE Virtual input 61 publisher bit	PubPres VIP 61
925	SW	GOOSE Virtual input 62 publisher bit	PubPres VIP 62
926	SW	GOOSE Virtual input 63 publisher bit	PubPres VIP 63
927	SW	GOOSE Virtual input 64 publisher bit	PubPres VIP 64
928	SW	GOOSE Virtual input 65 publisher bit	PubPres VIP 65
929	SW	GOOSE Virtual input 66 publisher bit	PubPres VIP 66
930	SW	GOOSE Virtual input 67 publisher bit	PubPres VIP 67
931	SW	GOOSE Virtual input 68 publisher bit	PubPres VIP 68
932	SW	GOOSE Virtual input 69 publisher bit	PubPres VIP 69
933	SW	GOOSE Virtual input 70 publisher bit	PubPres VIP 70
934	SW	GOOSE Virtual input 71 publisher bit	PubPres VIP 71
935	SW	GOOSE Virtual input 72 publisher bit	PubPres VIP 72
936	SW	GOOSE Virtual input 73 publisher bit	PubPres VIP 73
937	SW	GOOSE Virtual input 74 publisher bit	PubPres VIP 74
938	SW	GOOSE Virtual input 75 publisher bit	PubPres VIP 75
939	SW	GOOSE Virtual input 76 publisher bit	PubPres VIP 76
940	SW	GOOSE Virtual input 77 publisher bit	PubPres VIP 77
941	SW	GOOSE Virtual input 78 publisher bit	PubPres VIP 78
942	SW	GOOSE Virtual input 79 publisher bit	PubPres VIP 79
943	SW	GOOSE Virtual input 80 publisher bit	PubPres VIP 80
944	SW	GOOSE Virtual input 81 publisher bit	PubPres VIP 81
945	SW	GOOSE Virtual input 82 publisher bit	PubPres VIP 82
946	SW	GOOSE Virtual input 83 publisher bit	PubPres VIP 83

DDB No	Source	Description	English Text
947	SW	GOOSE Virtual input 84 publisher bit	PubPres VIP 84
948	SW	GOOSE Virtual input 85 publisher bit	PubPres VIP 85
949	SW	GOOSE Virtual input 86 publisher bit	PubPres VIP 86
950	SW	GOOSE Virtual input 87 publisher bit	PubPres VIP 87
951	SW	GOOSE Virtual input 88 publisher bit	PubPres VIP 88
952	SW	GOOSE Virtual input 89 publisher bit	PubPres VIP 89
953	SW	GOOSE Virtual input 90 publisher bit	PubPres VIP 90
954	SW	GOOSE Virtual input 91 publisher bit	PubPres VIP 91
955	SW	GOOSE Virtual input 92 publisher bit	PubPres VIP 92
956	SW	GOOSE Virtual input 93 publisher bit	PubPres VIP 93
957	SW	GOOSE Virtual input 94 publisher bit	PubPres VIP 94
958	SW	GOOSE Virtual input 95 publisher bit	PubPres VIP 95
959	SW	GOOSE Virtual input 96 publisher bit	PubPres VIP 96
960	SW	GOOSE Virtual input 97 publisher bit	PubPres VIP 97
961	SW	GOOSE Virtual input 98 publisher bit	PubPres VIP 98
962	SW	GOOSE Virtual input 99 publisher bit	PubPres VIP 99
963	SW	GOOSE Virtual input 100 publisher bit	PubPres VIP 100
964	SW	GOOSE Virtual input 101 publisher bit	PubPres VIP 101
965	SW	GOOSE Virtual input 102 publisher bit	PubPres VIP 102
966	SW	GOOSE Virtual input 103 publisher bit	PubPres VIP 103
967	SW	GOOSE Virtual input 104 publisher bit	PubPres VIP 104
968	SW	GOOSE Virtual input 105 publisher bit	PubPres VIP 105
969	SW	GOOSE Virtual input 106 publisher bit	PubPres VIP 106
970	SW	GOOSE Virtual input 107 publisher bit	PubPres VIP 107
971	SW	GOOSE Virtual input 108 publisher bit	PubPres VIP 108
972	SW	GOOSE Virtual input 109 publisher bit	PubPres VIP 109
973	SW	GOOSE Virtual input 110 publisher bit	PubPres VIP 110
974	SW	GOOSE Virtual input 111 publisher bit	PubPres VIP 111
975	SW	GOOSE Virtual input 112 publisher bit	PubPres VIP 112
976	SW	GOOSE Virtual input 113 publisher bit	PubPres VIP 113
977	SW	GOOSE Virtual input 114 publisher bit	PubPres VIP 114
978	SW	GOOSE Virtual input 115 publisher bit	PubPres VIP 115
979	SW	GOOSE Virtual input 116 publisher bit	PubPres VIP 116
980	SW	GOOSE Virtual input 117 publisher bit	PubPres VIP 117
981	SW	GOOSE Virtual input 118 publisher bit	PubPres VIP 118
982	SW	GOOSE Virtual input 119 publisher bit	PubPres VIP 119
983	SW	GOOSE Virtual input 120 publisher bit	PubPres VIP 120
984	SW	GOOSE Virtual input 121 publisher bit	PubPres VIP 121
985	SW	GOOSE Virtual input 122 publisher bit	PubPres VIP 122
986	SW	GOOSE Virtual input 123 publisher bit	PubPres VIP 123
987	SW	GOOSE Virtual input 124 publisher bit	PubPres VIP 124
988	SW	GOOSE Virtual input 125 publisher bit	PubPres VIP 125
989	SW	GOOSE Virtual input 126 publisher bit	PubPres VIP 126
990	SW	GOOSE Virtual input 127 publisher bit	PubPres VIP 127

DDB No	Source	Description	English Text
991	SW	GOOSE Virtual input 128 publisher bit	PubPres VIP 128
992	SW	GOOSE Virtual input 1 Quality bit	Quality VIP 1
993	SW	GOOSE Virtual input 2 Quality bit	Quality VIP 2
994	SW	GOOSE Virtual input 3 Quality bit	Quality VIP 3
995	SW	GOOSE Virtual input 4 Quality bit	Quality VIP 4
996	SW	GOOSE Virtual input 5 Quality bit	Quality VIP 5
997	SW	GOOSE Virtual input 6 Quality bit	Quality VIP 6
998	SW	GOOSE Virtual input 7 Quality bit	Quality VIP 7
999	SW	GOOSE Virtual input 8 Quality bit	Quality VIP 8
1000	SW	GOOSE Virtual input 9 Quality bit	Quality VIP 9
1001	SW	GOOSE Virtual input 10 Quality bit	Quality VIP 10
1002	SW	GOOSE Virtual input 11 Quality bit	Quality VIP 11
1003	SW	GOOSE Virtual input 12 Quality bit	Quality VIP 12
1004	SW	GOOSE Virtual input 13 Quality bit	Quality VIP 13
1005	SW	GOOSE Virtual input 14 Quality bit	Quality VIP 14
1006	SW	GOOSE Virtual input 15 Quality bit	Quality VIP 15
1007	SW	GOOSE Virtual input 16 Quality bit	Quality VIP 16
1008	SW	GOOSE Virtual input 17 Quality bit	Quality VIP 17
1009	SW	GOOSE Virtual input 18 Quality bit	Quality VIP 18
1010	SW	GOOSE Virtual input 19 Quality bit	Quality VIP 19
1011	SW	GOOSE Virtual input 20 Quality bit	Quality VIP 20
1012	SW	GOOSE Virtual input 21 Quality bit	Quality VIP 21
1013	SW	GOOSE Virtual input 22 Quality bit	Quality VIP 22
1014	SW	GOOSE Virtual input 23 Quality bit	Quality VIP 23
1015	SW	GOOSE Virtual input 24 Quality bit	Quality VIP 24
1016	SW	GOOSE Virtual input 25 Quality bit	Quality VIP 25
1017	SW	GOOSE Virtual input 26 Quality bit	Quality VIP 26
1018	SW	GOOSE Virtual input 27 Quality bit	Quality VIP 27
1019	SW	GOOSE Virtual input 28 Quality bit	Quality VIP 28
1020	SW	GOOSE Virtual input 29 Quality bit	Quality VIP 29
1021	SW	GOOSE Virtual input 30 Quality bit	Quality VIP 30
1022	SW	GOOSE Virtual input 31 Quality bit	Quality VIP 31
1023	SW	GOOSE Virtual input 32 Quality bit	Quality VIP 32
1024	SW	GOOSE Virtual input 33 Quality bit	Quality VIP 33
1025	SW	GOOSE Virtual input 34 Quality bit	Quality VIP 34
1026	SW	GOOSE Virtual input 35 Quality bit	Quality VIP 35
1027	SW	GOOSE Virtual input 36 Quality bit	Quality VIP 36
1028	SW	GOOSE Virtual input 37 Quality bit	Quality VIP 37
1029	SW	GOOSE Virtual input 38 Quality bit	Quality VIP 38
1030	SW	GOOSE Virtual input 39 Quality bit	Quality VIP 39
1031	SW	GOOSE Virtual input 40 Quality bit	Quality VIP 40
1032	SW	GOOSE Virtual input 41 Quality bit	Quality VIP 41
1033	SW	GOOSE Virtual input 42 Quality bit	Quality VIP 42
1034	SW	GOOSE Virtual input 43 Quality bit	Quality VIP 43

DDB No	Source	Description	English Text
1035	SW	GOOSE Virtual input 44 Quality bit	Quality VIP 44
1036	SW	GOOSE Virtual input 45 Quality bit	Quality VIP 45
1037	SW	GOOSE Virtual input 46 Quality bit	Quality VIP 46
1038	SW	GOOSE Virtual input 47 Quality bit	Quality VIP 47
1039	SW	GOOSE Virtual input 48 Quality bit	Quality VIP 48
1040	SW	GOOSE Virtual input 49 Quality bit	Quality VIP 49
1041	SW	GOOSE Virtual input 50 Quality bit	Quality VIP 50
1042	SW	GOOSE Virtual input 51 Quality bit	Quality VIP 51
1043	SW	GOOSE Virtual input 52 Quality bit	Quality VIP 52
1044	SW	GOOSE Virtual input 53 Quality bit	Quality VIP 53
1045	SW	GOOSE Virtual input 54 Quality bit	Quality VIP 54
1046	SW	GOOSE Virtual input 55 Quality bit	Quality VIP 55
1047	SW	GOOSE Virtual input 56 Quality bit	Quality VIP 56
1048	SW	GOOSE Virtual input 57 Quality bit	Quality VIP 57
1049	SW	GOOSE Virtual input 58 Quality bit	Quality VIP 58
1050	SW	GOOSE Virtual input 59 Quality bit	Quality VIP 59
1051	SW	GOOSE Virtual input 60 Quality bit	Quality VIP 60
1052	SW	GOOSE Virtual input 61 Quality bit	Quality VIP 61
1053	SW	GOOSE Virtual input 62 Quality bit	Quality VIP 62
1054	SW	GOOSE Virtual input 63 Quality bit	Quality VIP 63
1055	SW	GOOSE Virtual input 64 Quality bit	Quality VIP 64
1056	SW	GOOSE Virtual input 65 Quality bit	Quality VIP 65
1057	SW	GOOSE Virtual input 66 Quality bit	Quality VIP 66
1058	SW	GOOSE Virtual input 67 Quality bit	Quality VIP 67
1059	SW	GOOSE Virtual input 68 Quality bit	Quality VIP 68
1060	SW	GOOSE Virtual input 69 Quality bit	Quality VIP 69
1061	SW	GOOSE Virtual input 70 Quality bit	Quality VIP 70
1062	SW	GOOSE Virtual input 71 Quality bit	Quality VIP 71
1063	SW	GOOSE Virtual input 72 Quality bit	Quality VIP 72
1064	SW	GOOSE Virtual input 73 Quality bit	Quality VIP 73
1065	SW	GOOSE Virtual input 74 Quality bit	Quality VIP 74
1066	SW	GOOSE Virtual input 75 Quality bit	Quality VIP 75
1067	SW	GOOSE Virtual input 76 Quality bit	Quality VIP 76
1068	SW	GOOSE Virtual input 77 Quality bit	Quality VIP 77
1069	SW	GOOSE Virtual input 78 Quality bit	Quality VIP 78
1070	SW	GOOSE Virtual input 79 Quality bit	Quality VIP 79
1071	SW	GOOSE Virtual input 80 Quality bit	Quality VIP 80
1072	SW	GOOSE Virtual input 81 Quality bit	Quality VIP 81
1073	SW	GOOSE Virtual input 82 Quality bit	Quality VIP 82
1074	SW	GOOSE Virtual input 83 Quality bit	Quality VIP 83
1075	SW	GOOSE Virtual input 84 Quality bit	Quality VIP 84
1076	SW	GOOSE Virtual input 85 Quality bit	Quality VIP 85
1077	SW	GOOSE Virtual input 86 Quality bit	Quality VIP 86
1078	SW	GOOSE Virtual input 87 Quality bit	Quality VIP 87

DDB No	Source	Description	English Text
1079	SW	GOOSE Virtual input 88 Quality bit	Quality VIP 88
1080	SW	GOOSE Virtual input 89 Quality bit	Quality VIP 89
1081	SW	GOOSE Virtual input 90 Quality bit	Quality VIP 90
1082	SW	GOOSE Virtual input 91 Quality bit	Quality VIP 91
1083	SW	GOOSE Virtual input 92 Quality bit	Quality VIP 92
1084	SW	GOOSE Virtual input 93 Quality bit	Quality VIP 93
1085	SW	GOOSE Virtual input 94 Quality bit	Quality VIP 94
1086	SW	GOOSE Virtual input 95 Quality bit	Quality VIP 95
1087	SW	GOOSE Virtual input 96 Quality bit	Quality VIP 96
1088	SW	GOOSE Virtual input 97 Quality bit	Quality VIP 97
1089	SW	GOOSE Virtual input 98 Quality bit	Quality VIP 98
1090	SW	GOOSE Virtual input 99 Quality bit	Quality VIP 99
1091	SW	GOOSE Virtual input 100 Quality bit	Quality VIP 100
1092	SW	GOOSE Virtual input 101 Quality bit	Quality VIP 101
1093	SW	GOOSE Virtual input 102 Quality bit	Quality VIP 102
1094	SW	GOOSE Virtual input 103 Quality bit	Quality VIP 103
1095	SW	GOOSE Virtual input 104 Quality bit	Quality VIP 104
1096	SW	GOOSE Virtual input 105 Quality bit	Quality VIP 105
1097	SW	GOOSE Virtual input 106 Quality bit	Quality VIP 106
1098	SW	GOOSE Virtual input 107 Quality bit	Quality VIP 107
1099	SW	GOOSE Virtual input 108 Quality bit	Quality VIP 108
1100	SW	GOOSE Virtual input 109 Quality bit	Quality VIP 109
1101	SW	GOOSE Virtual input 110 Quality bit	Quality VIP 110
1102	SW	GOOSE Virtual input 111 Quality bit	Quality VIP 111
1103	SW	GOOSE Virtual input 112 Quality bit	Quality VIP 112
1104	SW	GOOSE Virtual input 113 Quality bit	Quality VIP 113
1105	SW	GOOSE Virtual input 114 Quality bit	Quality VIP 114
1106	SW	GOOSE Virtual input 115 Quality bit	Quality VIP 115
1107	SW	GOOSE Virtual input 116 Quality bit	Quality VIP 116
1108	SW	GOOSE Virtual input 117 Quality bit	Quality VIP 117
1109	SW	GOOSE Virtual input 118 Quality bit	Quality VIP 118
1110	SW	GOOSE Virtual input 119 Quality bit	Quality VIP 119
1111	SW	GOOSE Virtual input 120 Quality bit	Quality VIP 120
1112	SW	GOOSE Virtual input 121 Quality bit	Quality VIP 121
1113	SW	GOOSE Virtual input 122 Quality bit	Quality VIP 122
1114	SW	GOOSE Virtual input 123 Quality bit	Quality VIP 123
1115	SW	GOOSE Virtual input 124 Quality bit	Quality VIP 124
1116	SW	GOOSE Virtual input 125 Quality bit	Quality VIP 125
1117	SW	GOOSE Virtual input 126 Quality bit	Quality VIP 126
1118	SW	GOOSE Virtual input 127 Quality bit	Quality VIP 127
1119	SW	GOOSE Virtual input 128 Quality bit	Quality VIP 128
1120	SW	Provides the "Unused" selection in G32	
1121	PSL	Initiate Test Mode	Test Mode
1122	PSL	Binary coded setting group selector 1	SG Select x1

DDB No	Source	Description	English Text
1123	PSL	Binary coded setting group selector 2	SG Select 1x
1124	PSL	Remote Read Only 1 DDB	RP1 Read Only
1125	PSL	Remote Read Only 2 DDB	RP2 Read Only
1126	PSL	Remote Read Only NIC DDB	NIC Read Only
1127	PSL	Monitor Block	103 MonitorBlock
1128	PSL	Command Block	103 CommandBlock
1129	SW	Provides the "Unused" selection in G32	
1130	PSL	Reset Latched Relays & LED's	Reset Relays/LED
1131	PSL	Time synchronise to nearest minute on 0-1 change	Time Synch
1132	SW	Logic 0 for use in PSL (Never changes state!)	Logic 0 Ref.
1133	SW	Network Interface Card link 1 fail indication	ETH Link 1 Fail
1134	SW	Network Interface Card link 1 fail indication	ETH Link 2 Fail
1135	SW	Network Interface Card link 1 fail indication	ETH Link 3 Fail
1136	SW	bit 0 of the level access for HMI interface	HMI Access Lvl 1
1137	SW	bit 1 of the level access for HMI interface	HMI Access Lvl 2
1138	SW	bit 0 of the level access for the front port interface	FPort AccessLvl1
1139	SW	bit 1 of the level access for the front port interface	FPort AccessLvl2
1140	SW	bit 0 of the level access for the rear port 1 interface	RPrt1 AccessLvl1
1141	SW	bit 1 of the level access for the rear port 1 interface	RPrt1 AccessLvl2
1142	SW	bit 0 of the level access for the rear port 2 interface	RPrt2 AccessLvl1
1143	SW	bit 1 of the level access for the rear port 2 interface	RPrt2 AccessLvl2
1144 to 1215	SW	DDB_UNUSED	
1216 to 1515	PSL		
1516 to 2047	SW	DDB_UNUSED	

Table 1 – Logic nodes sorted by DDB number

3 FACTORY DEFAULT PROGRAMMABLE SCHEME LOGIC

The following table details the default settings of the PSL.

The MiCOM P849 models are as follows:

Model	Logic Inputs	Relay Outputs		
		Total	relays	High break relays
P849xxxA	32	16	16	--
P849xxxB	48	24	24	--
P849xxxC	32	30	14	16
P849xxxD	16	60	60	--
P849xxxE	64	16	16	--
P849xxxF	32	46	46	--

Table 2 – Model numbers, inputs and outputs

4 VIEWING AND PRINTING DEFAULT PSL DIAGRAMS

4.1 Typical Mappings

It is possible to view and print the default PSL diagrams for the device. Typically, these diagrams allow you to see these mappings:

- Opto Input Mappings
- Output Relay Mappings
- LED Mappings
- Start Indications
- Phase Trip Mappings
- System Check Mapping

4.2 Download and Print PSL Diagrams

To download and print the default PSL diagrams for the device:

1. Close MiCOM S1 Studio.
2. Select **Programs** > then navigate through to > **MiCOM S1 Studio** > **Data Model Manager**.
3. Click **Add** then **Next**.
4. Click **Internet** then **Next**.
5. Select your language then click **Next**.
6. From the tree view, select the model and software version.
7. Click **Install**. When complete click **OK**.
8. Close the Data Model Manager and start MiCOM S1 Studio.
9. Select Tools > PSL Editor (Px40).
10. In the PSL Editor select **File** > **Open**. The downloaded psl files are in C:\Program Files\ directory located in the \MiCOM S1\Courier\PSL\Defaults sub-directory.
11. Highlight the required psl diagram and select **File** > **Print**.

5 PROGRAMMABLE SCHEME LOGIC

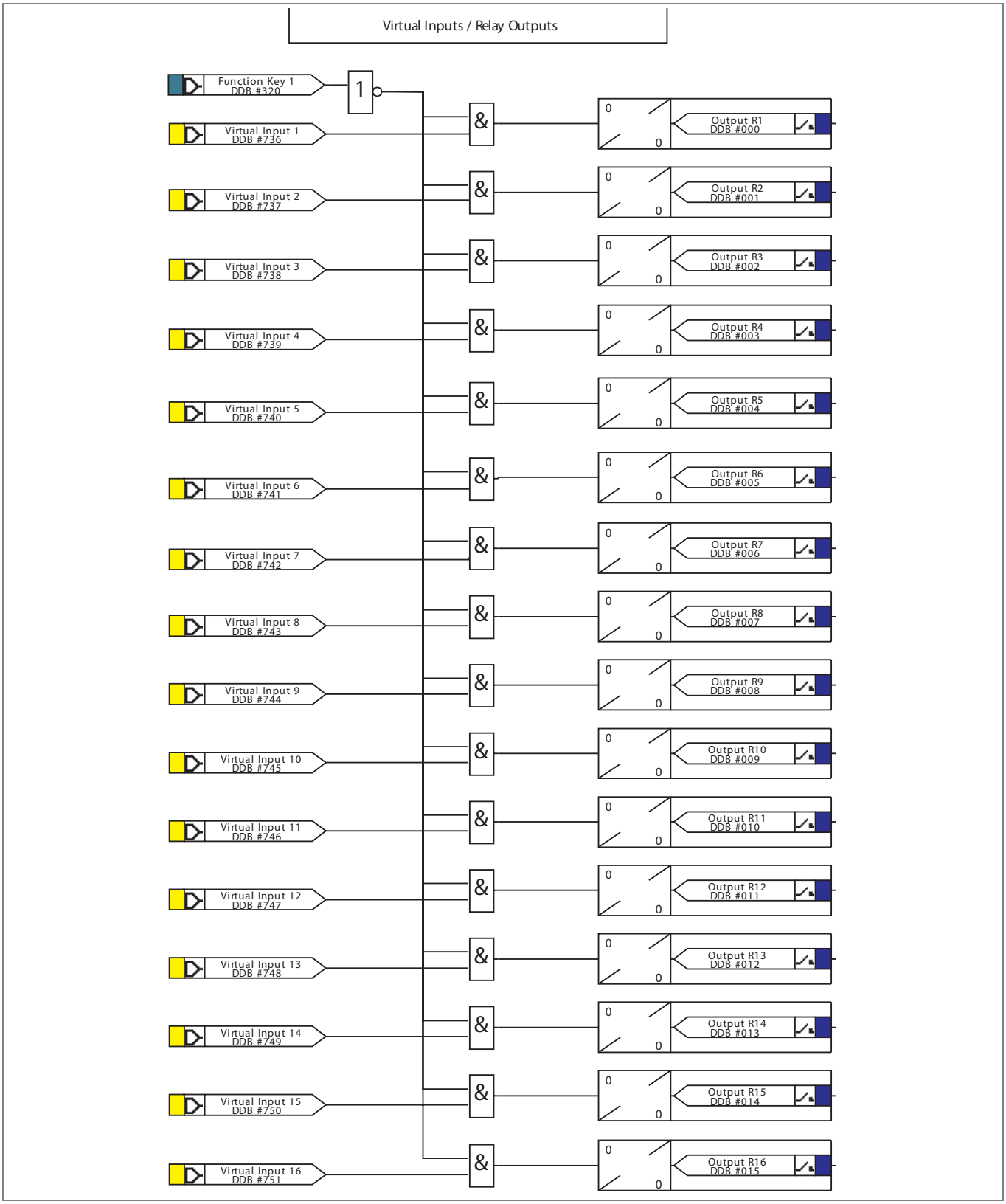

Figure 1 – Virtual inputs / relay outputs

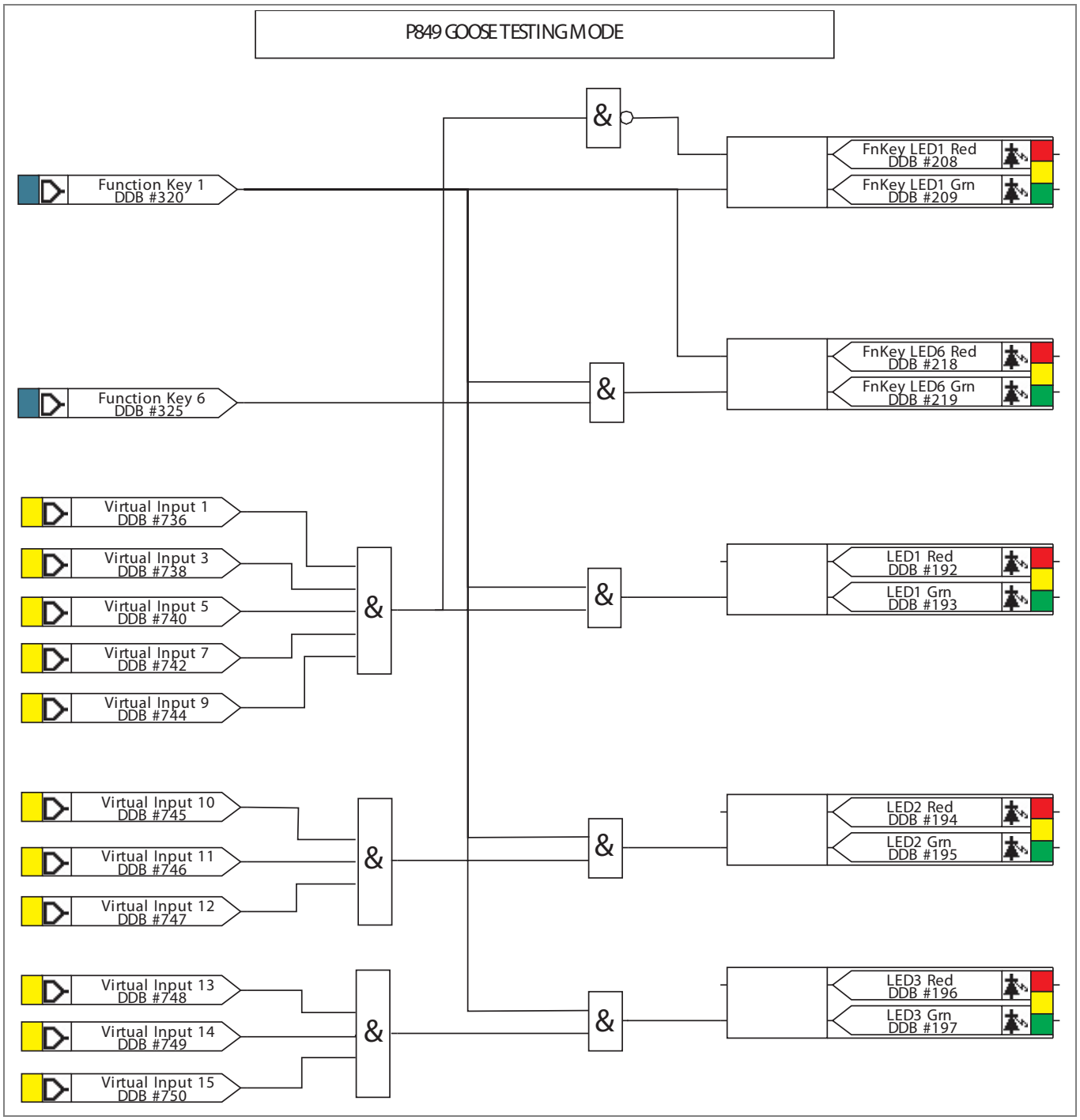

Figure 2 – Goose testing mode

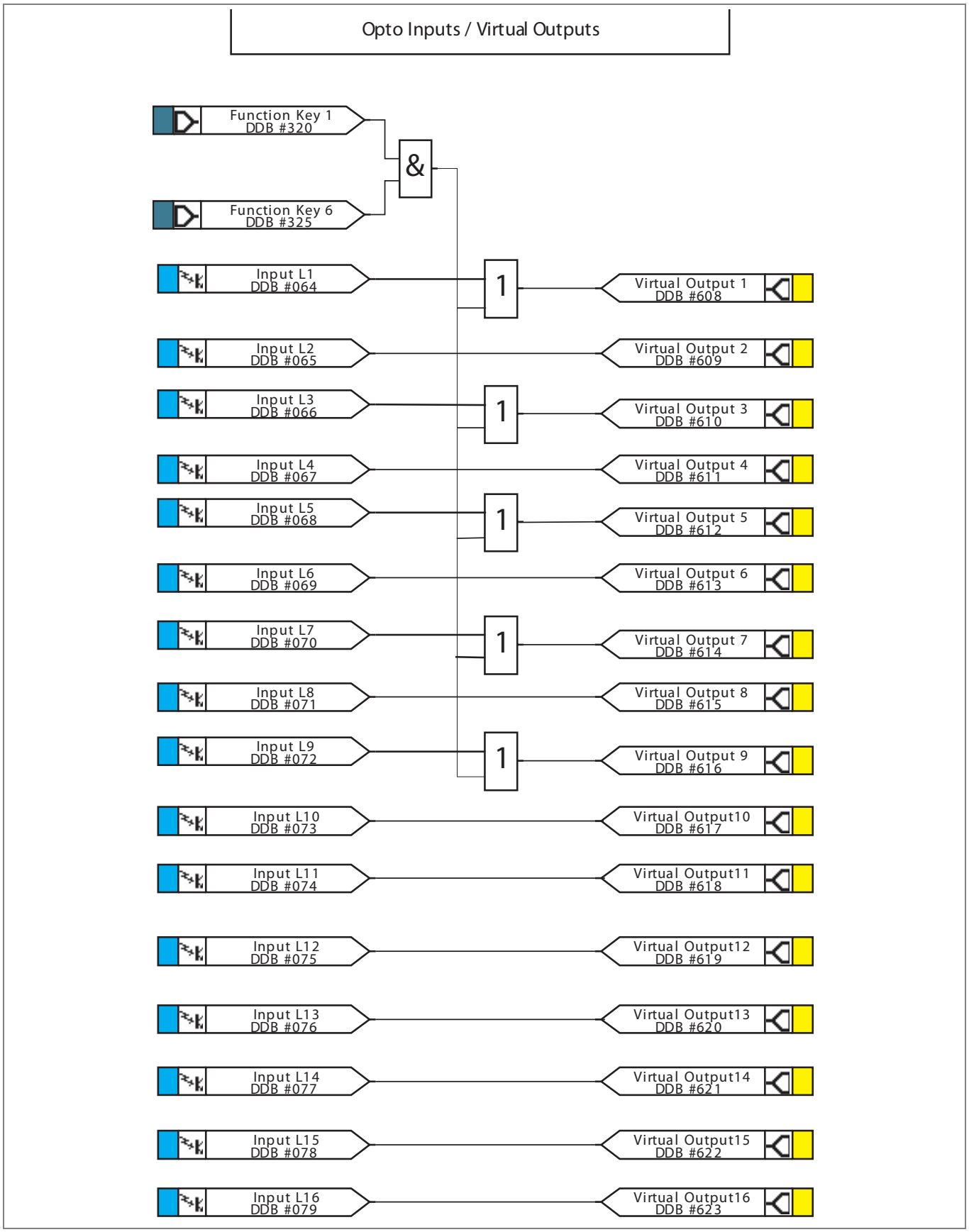

Figure 3 – Opto inputs / virtual outputs

Notes:

MEASUREMENTS AND RECORDING

CHAPTER 9

Date:	08/2015
Products covered by this chapter:	This chapter covers the specific versions of the MiCOM products listed below. This includes ***only*** the following combinations of Software Version and Hardware Suffix.
Hardware Suffix:	M
Software Version:	B0
Connection Diagrams:	10P849xx (xx = 01 to 06)

CONTENTS

TABLES

FIGURES

Notes:

1 RECORDING

1.1 Introduction

The relay is equipped with integral measurements, event, fault and disturbance recording facilities suitable for analysis of complex system disturbances.

The relay is flexible enough to allow for the programming of these facilities to specific user application requirements. These requirements are discussed in the sections which follow.

Important	**The MiCOM P849 does not produce measurements.**

1.2 Standard Event Recorder

The relay records and time tags up to 250 or 512 events (only up to 250 events in the P24x and P44x) and stores them in non-volatile (battery-backed up) memory. This lets the system operator establish the sequence of events that occurred in the relay following a particular power system condition or switching sequence. When the available space is used up, the oldest event is automatically overwritten by the new one (i.e. first in, first out).

The relay's real-time clock provides the time tag to each event, to a resolution of 1 ms.

The event records can be viewed either from the front plate LCD or remotely using the communications ports (using any available protocols, such as Courier or MODBUS).

For local viewing on the LCD of event, fault and maintenance records, select the **VIEW RECORDS** menu column.

For extraction from a remote source using communications, see the *SCADA Communications* chapter or the MiCOM S1 Studio instructions.

For a full list of all the event types and the meaning of their values, see the Menu Database document.

VIEW RECORDS	
LCD Reference	**Description**
Select Event	Setting range from 0 to 511. This selects the required event record from the possible 512 that may be stored. A value of 0 corresponds to the latest event and so on.
Menu Cell Ref	Self reset alarm active Self reset alarm inactive Relay event Opto event Protection event Platform event Fault logged event Maintenance Record logged event
Time & Date	Time & Date Stamp for the event given by the internal Real Time Clock.
Record Text	Up to 32 Character description of the Event (refer to following sections).
Record Value	Up to 32 Bit Binary Flag or integer representative of the Event (refer to following sections).

VIEW RECORDS	
LCD Reference	**Description**
Select Maint	Setting range from 0 to 4. This selects the required maintenance record from the possible 5 that may be stored. A value of 0 corresponds to the latest event and so on.
Maint Text Maint Type Maint Data	The following cells show all the starts etc. associated with the event.
Reset Indication	Either Yes or No. This serves to reset the trip LED indications provided that the relevant element has reset, to reset all LED and relays latched in the PSL, and to reset the latched alarms.

Table 1 – View records

1.2.1.1 Types of Event

An event may be a change of state of a control input or output relay, an alarm condition, or a setting change. The following sections show the various items that constitute an event:

1.2.1.2 Change of State of Opto-Isolated Inputs

If one or more of the opto (logic) inputs has changed state since the last time the protection algorithm ran, the new status is logged as an event. When this event is selected to be viewed on the LCD, three cells appear, as in shown here:

```
Time & date of event
“LOGIC INPUTS1”
“Event Value 0101010101010101”
```

The Event Value is a multi-bit word (see note) showing the status of the opto inputs, where the least significant bit (extreme right) corresponds to opto input 1. The same information is present if the event is extracted and viewed using a PC.

Note	*For P24x or P44x the Event Value is an 8 or 16 bit word.* *For P34x or P64x it is an 8, 12, 16, 24 or 32-bit word.* *For P445 it is an 8, 12 or 16-bit word.* *For P44y, P54x, P547 or P841, it is an 8, 12, 16 or 24-bit word.* *For P74x it is a 12, 16, 24 or 32-bit word.* *For P746 or P849 it is a 32-bit word.*

1.2.1.3 Change of State of One or More Output Relay Contacts

If one or more of the output relay contacts have changed state since the last time the protection algorithm ran, the new status is logged as an event. When this event is selected to be viewed on the LCD, three cells appear, as shown here:

```
Time and Date of Event
Output Contacts
Event Value 01010101010101010101010
```

The Event Value is a multi-bit word (see Note) showing the status of the output contacts, where the least significant bit (extreme right) corresponds to output contact 1, etc. The same information is present if the event is extracted and viewed using a PC.

Note	*For P24x the Event Value is is a 7 or 16-bit word.* *For P34x or P64x it is an 7, 11, 14, 15, 16, 22, 24 or 32-bit word.* *For P445 it is an 8, 12 or 16-bit word.* *For P44x it is a 7, 14 or 21 bit word.* *For P44y, P54x, P547 or P841, it is an 8, 12, 16, 24 or 32 bit word.* *For P74x it is a 12, 16, 24 or 32 bit word.* *For P746 or P849 it is a 24-bit word.*

1.2.1.4 Device Alarm Conditions

Any alarm conditions generated by the relays are logged as individual events. The following table shows examples of some of the alarm conditions and how they appear in the event list:

Alarm Condition	Event Text (‘System Data / Alarms Status 1” menu)	Event Value
Setting group via optos invalid	SG-opto Invalid	Bit position 3 in 32 bit field
Protection disabled	Prot'n Disabled	Bit position 4 in 32 bit field

Table 2 – Examples of alarm conditions

The previous table shows the abbreviated description given to the various alarm conditions and a corresponding value between 0 and 31. This value is appended to each alarm event in a similar way to the input and output events described previously. It is used by the event extraction software, such as MiCOM S1 Studio, to identify the alarm and is therefore invisible if the event is viewed on the LCD. ON or OFF is shown after the description to signify whether the particular condition has become operated or has reset.

Alarm Status 1			Alarm Status 2			Alarm Status 3	
Bit	Text		Bit	Text		Bit	Text
1	Unused		1 to 4	Unused		1	Battery Fail
2	Unused		5 to 14	SR User Alarm 8 tp 17		2	Field Volt Fail
3	SG-opto Invalid		15 to 32	MR User Alarm 18 to 35		3	Comm2 H/W FAIL
4	Prot'n Disabled					4	GOOSE IED Absent
5 to 25	Unused					5	NIC Not Fitted
26 to 32	SR User Alarm 1 (to 7)					6	NIC No Response
						8	NIC Soft. Reload
						9	Bad TCP/IP Config.
						10	Bad OSI Config.
						12	NIC SW Mis-Match
						13	IP Addr Conflict

Alarm Status 1			Alarm Status 2			Alarm Status 3	
Bit	Text		Bit	Text		Bit	Text
						14	IM Loopback
						15	IM Message Fail
						16	IM Data CD Fail
						17	IM Channel Fail
						18	Backup Setting
						19	Bad DNP Setting
						20 to 32	Unused

Table 3 – Alarm status

1.2.1.5 General Events

A number of events come under the heading of 'General Events'. The following list items are stored as events.

- Recognition of change of state of logic (optically isolated) inputs
- Recognition of change of state of output relays
- Alarms
- Maintenance records
- Settings changes (local and remote)

A complete list of the 'General Events' is given in the Device Menu Database (P849/EN MD), which is a separate document.

1.2.1.6 Setting Changes

Changes to any setting within the device are logged as an event.

Note	*Control/Support settings are settings which are not duplicated within the four setting groups. When any of these settings are changed, the event record is created simultaneously. However, changes to precise or standard event recorder settings will only generate an event once the settings have been confirmed at the 'setting trap'.*

1.2.2 Resetting of Precise Event Records

To delete the event, fault or maintenance reports, use the **RECORD CONTROL** column.

1.2.3 Viewing Event Records via MiCOM S1 Studio

When the event records are extracted and viewed on a PC they look slightly different than when viewed on the LCD.

The first line gives the description and time stamp for the event, while the additional information displayed below may be collapsed using the +/– symbol.

For further information regarding events and their specific meaning, refer to the *Relay Menu Database* document. This standalone document not included in this manual.

1.2.4 Event Filtering

Event reporting can be disabled from all interfaces that support setting changes. The settings that control the various types of events are in the RECORD CONTROL column. The effect of setting each to disabled is in shown in the following table:

Note	*Some occurrences can result in more than one type of event, e.g. a battery failure will produce an alarm event and a maintenance record event.*

If the Protection Event setting is Enabled, a further set of settings is revealed which allow the event generation by individual DDB signals to be enabled or disabled.

For further information on events and their specific meaning, see the *Relay Menu Database* document.

The following changes are stored as events:

- change of state logic (opto-isolated) inputs
- change of state of output relays
- Alarms
- Maintenance records
- Settings changes (local and remote)

The effect of setting each to disabled is as follows:

Menu text	Action
Clear Events	To clear the existing event log. An event will be generated indicating that the events have been erased
Clear Maint	To erase the existing maintenance.
Alarm Event	Disabled = all the occurrences that produce an alarm will result in no event being generated.
Relay O/P Event	Disabled = no event generated for any change in logic input state.
Opto Input Event	Disabled = no event generated for any change in logic input state.
General Event	Disabled = no General Events generated
Maint. Rec Event	Disabled = no event generated for any occurrence that produces a maintenance record.
Clear Dist Recs	To clear the existing records. An event will be generated indicating that the records have been erased.

Table 4 – Menu text and actions

2 DISTURBANCE RECORDER

The integral enhanced disturbance recorder has an area of memory specifically set aside for record storage. The number of records that may be stored by the relay is dependent on the selected recording duration and the installed software release.

The relay can typically store a pre-set minimum number of records, each of a pre-set duration. These may vary between different MiCOM products.

Disturbance records continue to be recorded until the available memory is exhausted, at which time the oldest record(s) are overwritten to make space for the newest one.

The recorder stores actual samples that are taken at a rate of pre-defined number of samples per cycle. Again, this may vary between different MiCOM products.

Each disturbance record consists of a number of analog data channels and digital data channels.

The relevant CT and VT ratios for the analog channels are also extracted to enable scaling to primary quantities. If a CT ratio is set less than unity, the relay will choose a scaling factor of zero for the appropriate channel.

This device can typically store a minimum of 50 records, each of 1.5 seconds duration.

Each disturbance record consists of up to 32 digital data channels.

Menu Text	Action
Duration	This sets the overall recording time
Trigger Position	This sets the trigger point as a percentage of the duration
Trigger Mode	Sets Single or Extended trigger mode.
Digital input xx (with xx = 1 to 32)	Any relay output digital channel, any Opto-isolated inputs or Internal digital signals can be assigned to this channel. The digital channel will trigger the precise event recorder when the corresponding assigned event will occur.
Digital trigger xx (with xx = 1 to 32)	When “Trigger L/H” is selected, the channel will trigger the precise event recorder when changing from ‘0’ (low Level) to ‘1’ (High level). If “Trigger H/L” is selected, it will trigger when changing from ‘1’ (high level) to ‘0’ (low level).

Table 5 – Menu text and actions

The pre and post fault recording times are set by a combination of the **Duration** and **Trigger Position** cells. **Duration** sets the overall recording time and the **Trigger Position** sets the trigger point as a percentage of the duration.

- For example, the default settings show that the overall recording time is set to 1.5 s with the trigger point being at 33.3% of this, giving 0.5 s pre-fault and 1 s post-fault recording times.

If a further trigger occurs while a recording is taking place, the recorder ignores the trigger if the **Trigger Mode** is set to **Single**. However, if this is set to **Extended**, the post-trigger timer is reset to zero, extending the recording time.

As can be seen from the menu, each of the analog channels is selectable from the available analog inputs to the relay. The digital channels may be mapped to any of the opto isolated inputs or output contacts, in addition to several internal relay digital signals, such as protection starts and LEDs. The complete list of these signals may be found by viewing the available settings in the relay menu or using a setting file in MiCOM S1 Studio. Any of the digital channels may be selected to trigger the disturbance recorder on either a low-to-high or a high-to-low transition, using the **Input Trigger** cell. The default trigger settings are that any dedicated trip output contacts, such as relay 3, trigger the recorder.

It is not possible to view the disturbance records locally using the LCD; they must be extracted using suitable software such as MiCOM S1 Studio. This process is fully explained in the *SCADA Communications* chapter.

3 MEASUREMENTS

The MiCOM P849 device does not acquire any analogue value. The "Measurements SETUP" (when visible) does not display measurements.

PRODUCT DESIGN

CHAPTER 10

Date:	08/2015
Products covered by this chapter:	This chapter covers the specific versions of the MiCOM products listed below. This includes ***only*** the following combinations of Software Version and Hardware Suffix.
Hardware Suffix:	M
Software Version:	B0
Connection Diagrams:	10P849xx (xx = 01 to 06)

CONTENTS

FIGURES

TABLES

1 RELAY SYSTEM OVERVIEW

1.1 Hardware Overview

The relay is based on a modular hardware design where each module performs a separate function. This section describes the functional operation of the various hardware modules. Some modules are essential while others are optional depending on the user's requirements (see *Product Specific Options* and *Hardware Communications Options*).

All modules are connected by a parallel data and address bus which allows the processor board to send and receive information to and from the other modules as required.

There is also a separate serial data bus for transferring sample data from the input module to the processor. See the following *Relay modules* diagram.

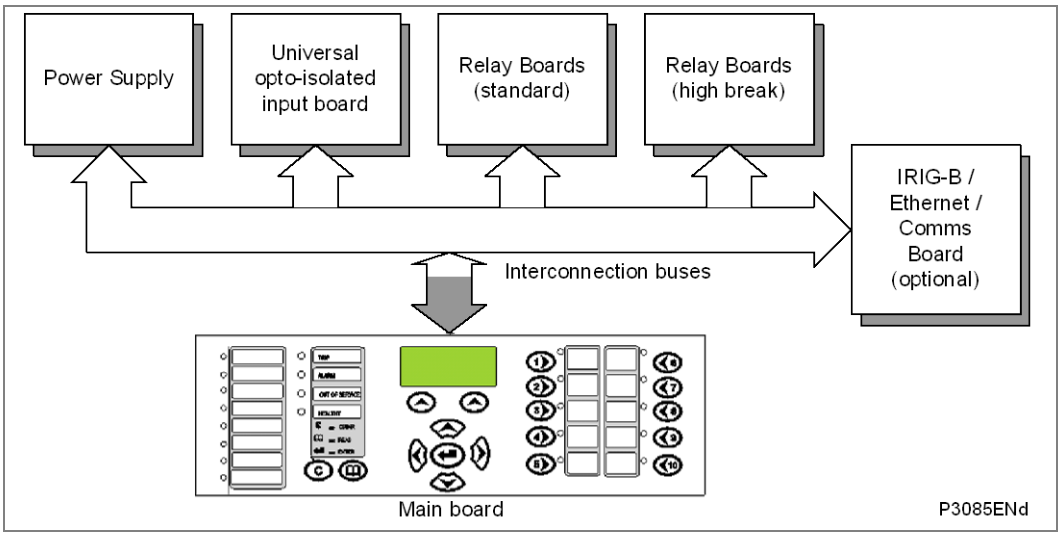

Figure 1 - Relay modules and information flow

1.2 Mechanical Layout

The relay case is pre-finished steel with a conductive covering of aluminum and zinc. This provides good earthing at all joints with a low impedance path to earth that is essential for shielding from external noise. The boards and modules use multi-point grounding (earthing) to improve immunity to external noise and minimize the effect of circuit noise. Ground planes are used on boards to reduce impedance paths and spring clips are used to ground the module metalwork.

Heavy duty terminal blocks are used at the rear of the relay for the current and voltage signal connections. Medium duty terminal blocks are used for the digital logic input signals, output relay contacts, power supply and rear communication port. A BNC connector is used for the optional IRIG-B signal. 9-pin and 25-pin female D-connectors are used at the front of the relay for data communication.

Inside the relay the boards plug into the connector blocks at the rear, and can be removed from the front of the relay only. The connector blocks to the relay's CT inputs have internal shorting links inside the relay. These automatically short the current transformer circuits before they are broken when the board is removed.

The front panel consists of a membrane keypad with tactile dome keys, an LCD and 12 or 22 LEDs (depending on the model) mounted on an aluminum backing plate.

1.3 Processor Board

The processor board performs all calculations for the relay and controls the operation of all other modules in the relay. The processor board also contains and controls the user interfaces (LCD, LEDs, keypad and communication interfaces).

The relay is based around a TMS320VC33-150MHz (peak speed), floating-point, 32-bit Digital Signal Processor (DSP) operating at a clock frequency of half this speed. This processor performs all of the calculations for the relay, including the protection functions, control of the data communication and user interfaces including the operation of the LCD, keypad and LEDs.

The processor board is directly behind the relay's front panel. This allows the LCD and LEDs and front panel communication ports to be mounted on the processor board. These ports are:

- The 9-pin D-connector for EIA(RS)232 serial communications used for MiCOM S1 Studio and Courier communications.
- The 25-pin D-connector relay test port for parallel communication.

All serial communication is handled using a Field Programmable Gate Array (FPGA).

The main processor board has:

- 2 MB SRAM for the working area. This is fast access (zero wait state) volatile memory used to temporarily store and execute the processor software.
- 4 MB flash ROM to store the software code, text, configuration data, default settings, and present settings.
- 4 MB battery-backed SRAM to store disturbance, event, fault and maintenance records.

Note	*With hardware revisions L and M, the SRAM size has changed from 2MB to 8MB; and the Flash size has changed from 4MB to 8MB.*

1.4 Internal Communication Buses

The relay has two internal buses for the communication of data between different modules. The main bus is a parallel link that is part of a 64-way ribbon cable. The ribbon cable carries the data and address bus signals in addition to control signals and all power supply lines. Operation of the bus is driven by the main processor board that operates as a master while all other modules in the relay are slaves.

The second bus is a serial link that is used exclusively for communicating the digital sample values from the input module to the main processor board. The DSP has a built-in serial port that is used to read the sample data from the serial bus. The serial bus is also carried on the 64-way ribbon cable.

1.5 Input Module

The input module provides the interface between the processor board and the digital signals coming into the device.

As shown in the *Main input board* diagram, the input board provides the circuitry for the digital input signals. The digital input signals are opto isolated on this board to prevent excessive voltages on these inputs causing damage to the device's internal circuitry.

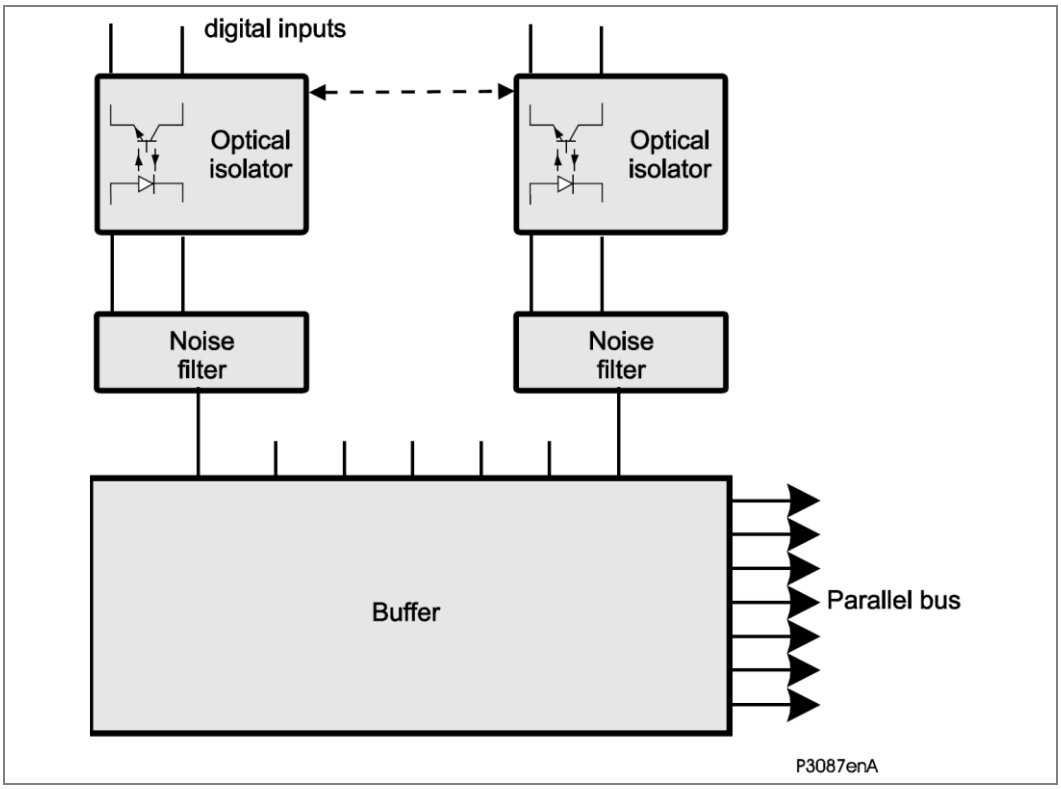

Figure 2 - Main input board

The other function of the input board is to read the state of the signals present on the digital inputs and present this to the parallel data bus for processing. The input board holds eight optical isolators for the connection of up to eight digital input signals. The opto-isolators are used with the digital signals for the same reason as the transformers with the analogue signals; to isolate the relay's electronics from the power system environment. The input board provides some hardware filtering of the digital signals to remove unwanted noise before buffering the signals for reading on the parallel data bus.

1.5.1 Universal Opto Isolated Logic Inputs

The standard opto-isolated input module consists of a main input board which provides isolated digital inputs.

This series of relays have universal opto-isolated logic inputs that can be programmed for the nominal battery voltage of the circuit of which they are a part. This allows different voltages for different circuits such as signaling and tripping. They can also be programmed as Standard 60% - 80% or 50% - 70% to satisfy different operating constraints.
Threshold levels are shown in the following table:

Menu Text	Default Setting	Setting Range		Step Size
		Min.	Max.	
OPTO CONFIG.				
Global Nominal V	48/54V	24/27V, 30/34V, 48/54V, 110/125V, 220/250V, Custom		
Opto Input x	48/54V	24/27V, 30/34V, 48/54V, 110/125V, 220/250V, Custom		

Table 1 – Setting ranges

This lower value eliminates fleeting pickups that may occur during a battery earth fault, when stray capacitance may present up to 50% of battery voltage across an input. Each input has filtering of 7ms. This renders the input immune to induced noise on the wiring: although this method is secure it can be slow.

In the Opto Config. menu the nominal battery voltage can be selected for all opto inputs by selecting one of the five standard ratings in the Global Nominal V settings. If Custom is selected then each opto input can individually be set to a nominal voltage value.

1.6 Power Supply Module (including Output Devices)

The power supply module contains two boards, one for the power supply unit and the other for the output relays. It provides power to all of the other modules in the relay, as well as the EIA(RS)485 electrical connection for the rear communication port. The second board of the power supply module contains the relays that provide the output contacts.

1.6.1 Power Supply Board (including EIA(RS)485 Communication Interface)

One of three different configurations of the power supply board can be fitted to the relay. This will be specified at the time of order and depends on the nature of the supply voltage that will be connected to the relay. The options are shown in the following table:

Nominal dc range	Nominal ac range
24 - 32 V dc	dc only
48 - 110 V dc	dc only
110 - 250 V dc	100 - 240 V ac rms

Table 2 - Power supply options

The output from all versions of the power supply module are used to provide isolated power supply rails to all of the other modules in the relay. Three voltage levels are used in the relay: 5.1 V for all of the digital circuits, ±16 V for the analog electronics such as on the input board, and 22 V for driving the output relay coils. All power supply voltages including the 0 V earth line are distributed around the relay through the 64-way ribbon cable. The power supply board also provides the 48 V field voltage. This is brought out to terminals on the back of the relay so that it can be used to drive the optically-isolated digital inputs.

The two other functions provided by the power supply board are the EIA(RS)485 communications interface and the watchdog contacts for the relay. The EIA(RS)485 interface is used with the relay's rear communication port to provide communication using one of either Courier, MODBUS, IEC60870-5-103, or DNP3.0 protocols. The EIA(RS)485 hardware supports half-duplex communication and provides optical isolation of the serial data that is transmitted and received. All internal communication of data from the power supply board is through the output relay board connected to the parallel bus.

The watchdog facility has two output relay contacts, one normally open and one normally closed. These are driven by the main processor board and indicate that the relay is in a healthy state.

The power supply board incorporates inrush current limiting. This limits the peak inrush current, during energization, to approximately 10 A.

1.6.2 Auxiliary Power Supply

In the relay the power supply module contains a main power supply and an auxiliary power supply. The auxiliary power supply adds power on the 22 V rail for up to seven communication boards within the relay.

The three input voltage options are the same as for main supply. The relay board is provided as a standalone board.

1.6.3 Output Relay Board

The output relay board has eight relays, six normally open contacts and two changeover contacts.

The relays are driven from the 22 V power supply line. The relays' state is written to or read from using the parallel data bus.

1.6.4 High Break Relay Board

The output relay board holds four relays, all normally open. The relays are driven from the 22V power supply line. The relays' state is written to or read from using the parallel data bus.

This board uses a hybrid of MOSFET Solid State Devices (SSD) in parallel with high capacity relay output contacts. The MOSFET has a varistor across it to provide protection which is required when switching off inductive loads because the stored energy in the inductor causes a reverse high voltage which could damage the MOSFET.

When there is a control input command to operate an output contact, the miniature relay is operated at the same time as the SSD. The miniature relay contact closes in nominally 3.5 ms and is used to carry the continuous load current; the SSD operates in <0.2 ms and is switched off after 7.5 ms. When the control input resets to open the contacts, the SSD is again turned on for 7.5 ms. The miniature relay resets in nominally 3.5 ms before the SSD so the SSD is used to break the load. The SSD absorbs the energy when breaking inductive loads and so limits the resulting voltage surge. This contact arrangement is for switching dc circuits only. As the SSD comes on very fast (<0.2 ms) these high break output contacts have the added advantage of being very fast operating. See the *High break contact operation* diagram below:

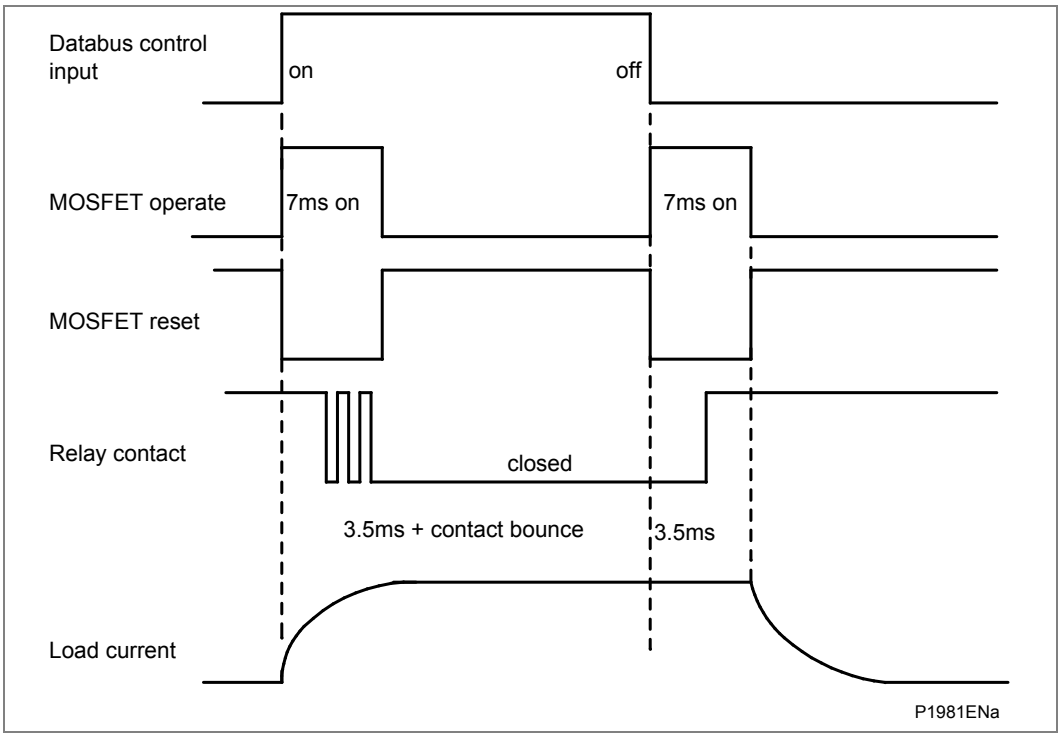

Figure 3 - High break contact operation

1.7 Product Specific Options

Product Specific Options may mean that an additional board may be present if it was specified when the relay was ordered. The product specific options commonly allow a choice of IRIG-B, different numbers of Optos, Relays (including High Break relays). These options are shown in the *Ordering Options* section in *Chapter 1 – Introduction*.

1.8 IRIG-B Modulated or Unmodulated Board (Optional)

The optional IRIG-B board is an order option that can be fitted to provide an accurate timing reference for the relay. This can be used wherever an IRIG-B signal is available. The IRIG-B signal is connected to the board with a BNC connector on the back of the relay. The timing information is used to synchronize the relay's internal real-time clock to an accuracy of 1 ms. The internal clock is then used for the time tagging of the event, fault maintenance and disturbance records. The IRIG-B board can also be specified with a fiber optic or Ethernet rear communication port.

The modulated or unmodulated IRIG-B board, which is optional, can be used where an IRIG-B signal is available to provide an accurate time reference for the device. There is also an option on this board to specify:

- a fibre optic rear communication port, for use with IEC60870 communication only.
- a second rear port designed typically for dial-up modem access by engineers/operators (see the *Second Rear Comms and InterMiCOM Board Board (Optional)* section).

All modules are connected by a parallel data and address bus which allows the processor board to send and receive information to and from the other modules as required. There is also a separate serial data bus for conveying data from the input module to the processor. The *Software Overview* section shows the modules of the device and the flow of information between them.

The IRIG-B board is controlled by the main board.

1.9 Second Rear Comms and InterMiCOM Board Board (Optional)

The optional second rear port is designed typically for dial-up modem access by engineers/operators, when the main port is reserved for SCADA traffic. Communication is via one of three physical links; K-Bus, EIA(RS)485 or EIA(RS)232. The port supports full local or remote control access by MiCOM S1 V2 or MiCOM S1 Studio software. The second rear port is also available with an on board IRIG-B input.

The optional board also houses port “SK5”, the InterMiCOM teleprotection port. InterMiCOM permits end-to-end signalling with a remote device. Port SK5 has an EIA(RS)232 connection, allowing connection to a MODEM, or compatible multiplexers.

1.10 Second Rear Communications

On ordering this board within a relay, both 2nd rear communications and InterMiCOM will become connection and setting options. The user may then enable either one, or both, as demanded by the installation.

For relays with the Courier protocol on the first rear communications port there is the hardware option of a second rear communications port (which also runs the Courier language). This can be used over one of three physical links: twisted pair K-BUS (non-polarity sensitive), twisted pair EIA(RS)485 (connection polarity sensitive) or EIA(RS)232.

The second rear comms. board, Ethernet and IRIG-B boards are mutually exclusive since they use the same hardware slot. For this reason two versions of second rear comms. and Ethernet boards are available; one with an IRIG-B input and one without. The second rear comms. board is shown in the following diagram.

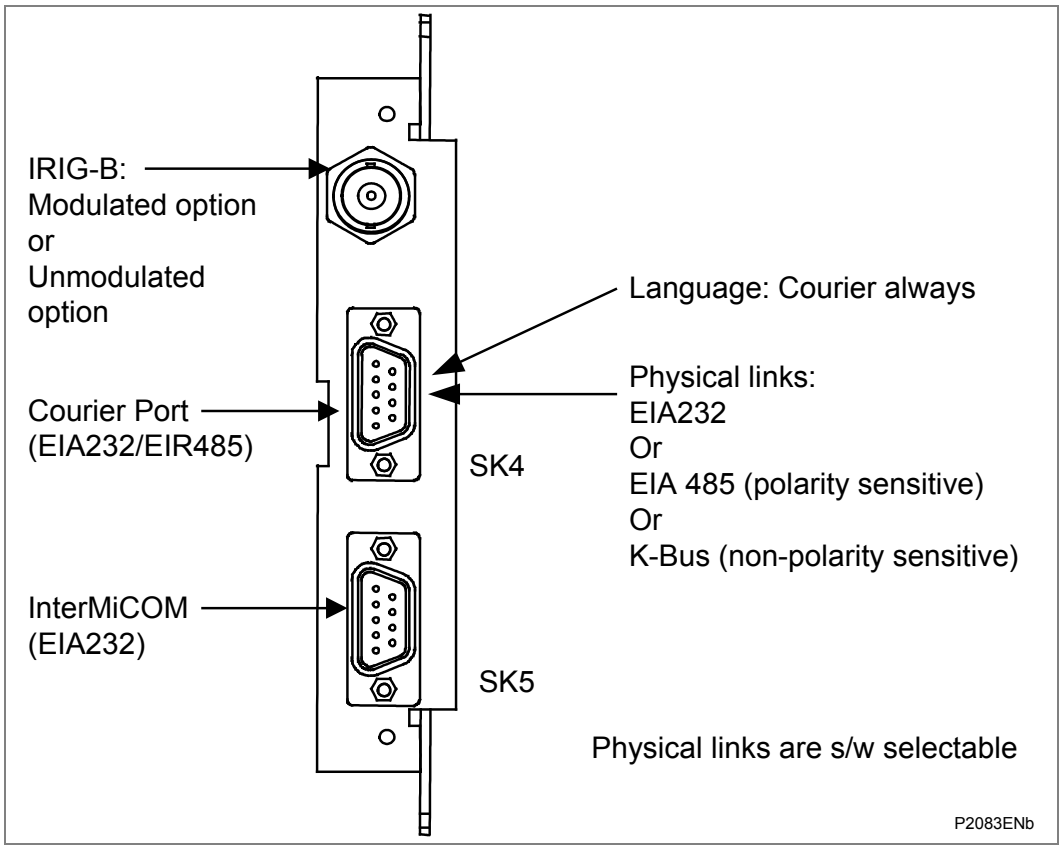

Figure 4 - Rear comms. port

1.11 Ethernet and Redundant Ethernet Boards

This is a mandatory board for IEC 61850 enabled relays. It provides network connectivity through either copper or fiber media at rates of 10Mb/s (copper only) or 100Mb/s. There is also an option on this board to specify IRIG-B board port (modulated or un-modulated). This board, the IRIG-B board mentioned in the Hardware Communications Options section and second rear comms. board mentioned in the IRIG-B Board section are mutually exclusive as they all utilize slot A within the relay case.

All modules are connected by a parallel data and address bus that allows the processor board to send and receive information to and from the other modules as required. There is also a separate serial data bus for conveying sample data from the input module to the processor. The relay modules and information flow diagram shows the modules of the relay and the flow of information between them.

This optional board is required for providing network connectivity using IEC 61850. There are a variety of different boards which provide Ethernet connectivity.

Important	**The choice of communication board options varies according to the Hardware Suffix and the Software Version of the MiCOM product. These are shown in the *Ordering Options* section in *Chapter 1 – Introduction*,**

By way of example, the board options may include:

- single-port Ethernet boards (which use 10/100 Mbits/s Copper and modulated/unmodulated IRIG-B connectivity)
- single-port Ethernet boards (which use 100MBits/s optical fibre connectivity)
- Redundant Ethernet Self-Healing Ring with one or more multi-mode fibre optic ports and modulated/unmodulated IRIG-B connectivity
- Redundant Ethernet RSTP with one or more multi-mode fibre optic ports and modulated/unmodulated IRIG-B connectivity
- Redundant Ethernet Dual Homing Star with one or more multi-mode fibre optic ports and modulated/unmodulated IRIG-B connectivity
- Redundant Ethernet Parallel Redundancy Protocol (PRP) with one or more multi-mode fibre optic ports and modulated/unmodulated IRIG-B connectivity
- Redundant Ethernet with PRP/HSR/Dual IP and a mixture of LC/RJ45 ports and modulated/unmodulated IRIG-B connectivity

Some of these options are mutually exclusive as they all use slot A in the relay case.

Note	*Each Ethernet board has a unique MAC address used for each Ethernet communication interface. The MAC address is printed on the rear of the board, next to the Ethernet sockets.*

Note	*The 100 Mbits/s Fiber Optic ports use ST/LC type connectors and are suitable for 1310 nm multi-mode fiber type.*

Copper ports use RJ45 type connectors. When using copper Ethernet, it is important to use Shielded Twisted Pair (STP) or Foil Twisted Pair (FTP) cables, to shield the IEC 61850 communications against electromagnetic interference. The RJ45 connector at each end of the cable must be shielded, and the cable shield must be connected to this RJ45 connector shield, so that the shield is grounded to the relay case. Both the cable and the RJ45 connector at each end of the cable must be Category 5 minimum, as specified by the IEC 61850 standard.

It is recommended that each copper Ethernet cable is limited to a maximum length of 3 m and confined to one bay or cubicle.

When using IEC 61850 communications through the Ethernet board, the rear EIA(RS)485 and front EIA(RS)232 ports are also available for simultaneous use, both using the Courier protocol.

One example of an Ethernet board is shown in this *Ethernet board connectors* diagram:

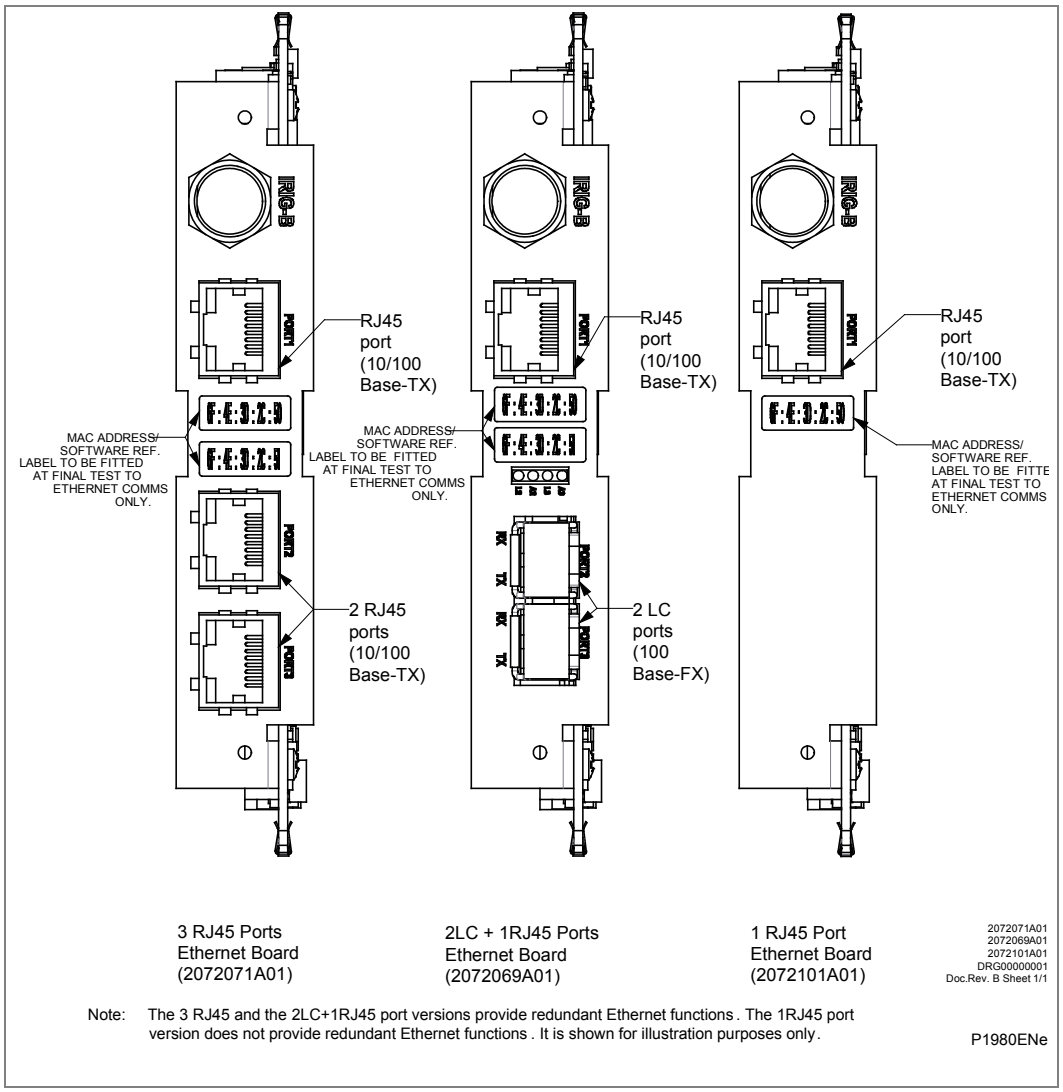

Figure 5 - Ethernet board connectors (3 RJ45 or 2 LC + RJ45 or 1 RJ45)

1.11.1 Input and Output Boards

Model	Opto-inputs	Device outputs
P849xxxA	32 x UNI (1)	16 (12 N/O, 4 C/O)
P849xxxB	48 x UNI (1)	24 (18 N/O, 6 C/O)
P849xxxC	32 x UNI (1)	14 (6 N/O, 8 C/O) + 16 high break devices
P849xxxD	16 x UNI (1)	60 (36 N/O, 24 C/O)
P849xxxE	64 x UNI (1)	16 (12 N/O, 4 C/O)
P849xxxF	32 x UNI (1)	46 (30 N/O, 16 C/O)
(1) Universal voltage range opto inputs N/O – normally open C/O – change over		

Table 3 - Input and output boards

1.11.2 Power Supply Module

The power supply module provides a power supply to all of the other modules in the relay, at three different voltage levels.

The power supply board also provides the EIA(RS)485 electrical connection for the rear communication port.

On a second board, the power supply module contains:

- relays which provide the output contacts (P742 and P743),
- an auxiliary power supply (P741).

The power supply module also provides a 48V external field supply output to drive the opto isolated digital inputs (or the substation battery may be used to drive the optos).

2 RELAY SOFTWARE

The relay software was introduced in the overview of the relay at the start of this chapter. The software can be considered to be made up of these sections:

- The real-time operating system
- The system services software
- The platform software
- The protection and control software

These four elements are all processed by the same processor board.This section describes in detail the ***platform software*** and the ***protection and control software***, which between them control the functional behavior of the relay. The following *Relay software structure* diagram shows the structure of the relay software.

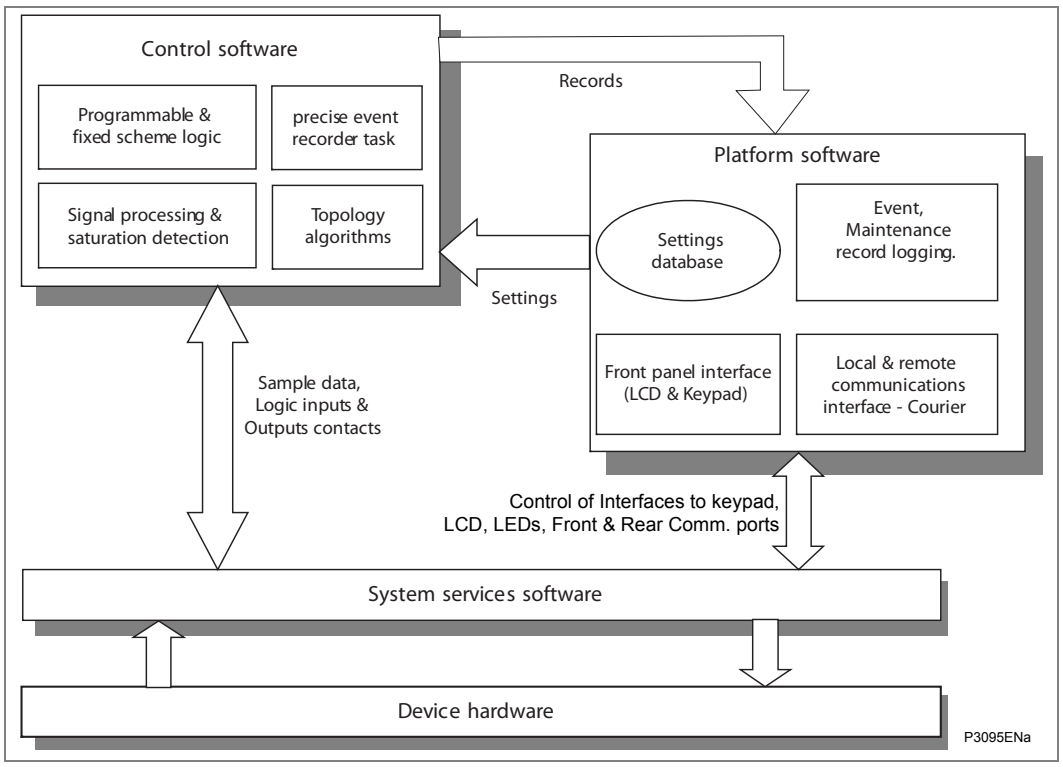

Figure 6 – Relay software structure

2.1.1 Real-Time Operating System

The real-time operating system provides a framework for the different parts of the relay's software to operate in.

The software is split into tasks; the real-time operating system is used to schedule the processing of the tasks to ensure that they are processed in the time available and in the desired order of priority. The operating system is also responsible in part for controlling the communication between the software tasks through the use of operating system messages.

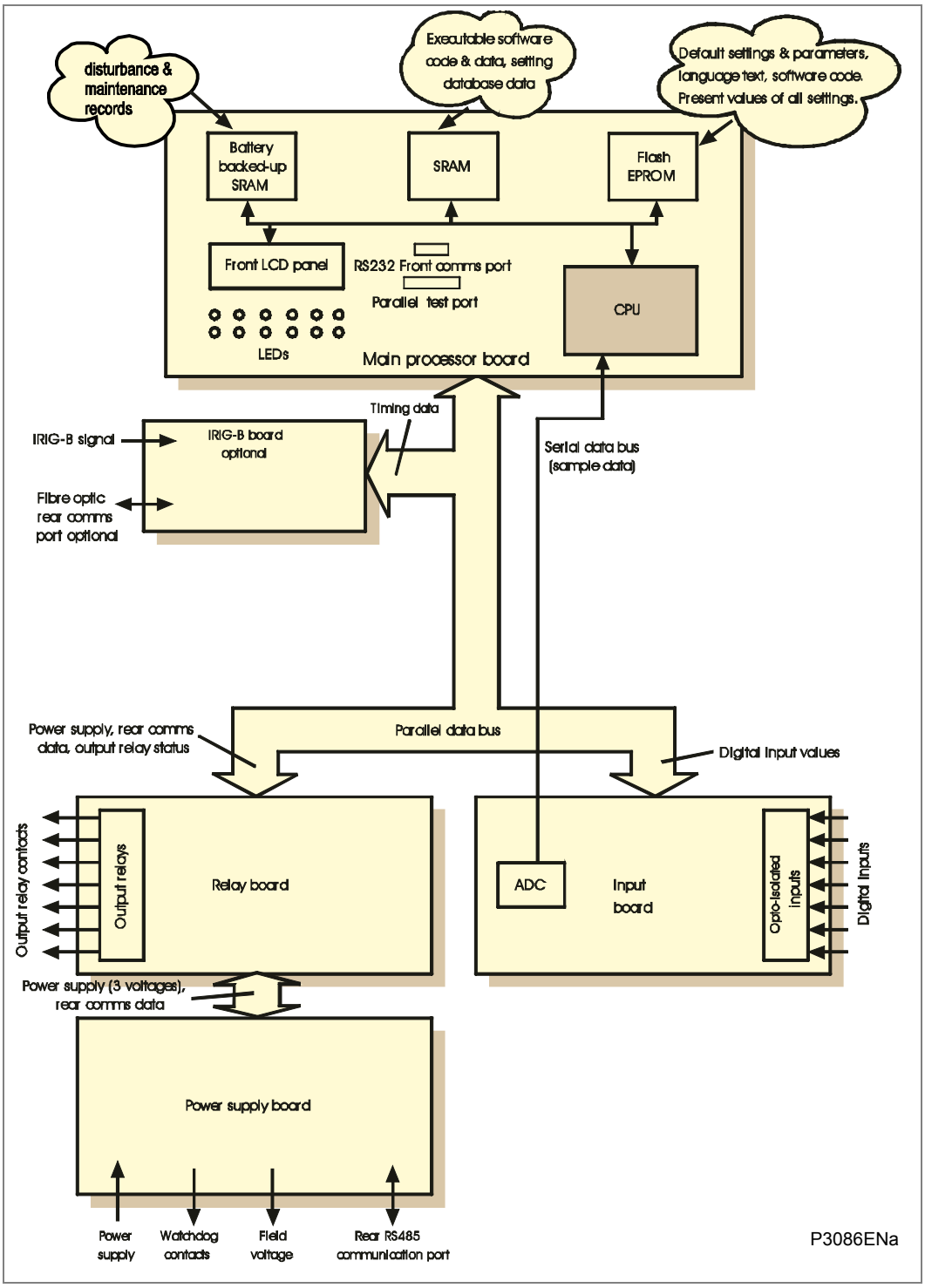

Figure 7 - Device modules and information flow

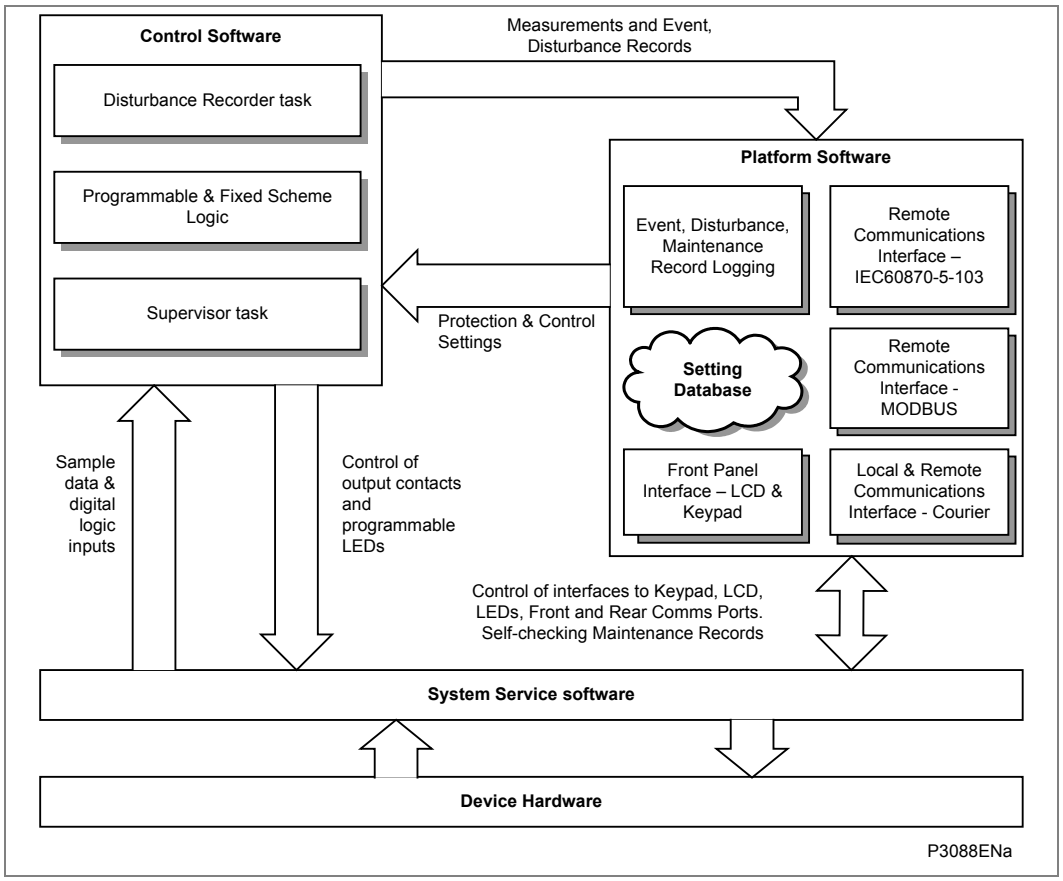

Figure 8 - Device software structure

2.2 Real-Time Operating System

The real-time operating system provides a framework for the different parts of the relay's software to operate in.

The software is split into tasks; the real-time operating system is used to schedule the processing of the tasks to ensure that they are processed in the time available and in the desired order of priority. The operating system is also responsible in part for controlling the communication between the software tasks through the use of operating system messages.

As explained in the hardware overview, each relay contains one main board and one coprocessor board. These two boards use two different operating systems:

- For main board software: a real time operating system provides a framework for the different parts of the relay's software to operate within. To this end, the software is split into tasks. The real-time operating system is responsible for scheduling the processing of these tasks such that they are carried out in the time available and in the desired order of priority.
- For coprocessor board software: a sequencer manages all the functions implemented on the coprocessor board. Each function is executed at a fixed frequency. Consequently the CPU load of the coprocessor is fixed and independent of the network's frequency.

The real-time operating system is responsible for scheduling the processing of these tasks such that they are carried out in the time available and in the desired order of priority. The operating system is also responsible for the exchange of information between tasks, in the form of messages.

2.3 System Services Software

As shown in the above *Relay software structure* diagram, the system services software provides the low-level control of the relay hardware. It also provides the interface between the relay's hardware and the higher-level functionality of the platform software and the protection and control software.

For example, the system services software provides drivers for items such as the LCD display, the keypad and the remote communication ports. It also controls the boot of the processor and downloading of the processor code into SRAM from non-volatile flash EPROM at power up.

2.4 Platform Software

The platform software has these main functions:

- To deal with the management of the relay settings.
- To control the logging of all records that are generated by the protection software, including alarms and event, fault, disturbance and maintenance records.
- To store and maintain a database of all of the relay's settings in non-volatile memory.
- To provide the internal interface between the settings database and each of the relay's user interfaces. These interfaces are the front panel interface and the front and rear communication ports, using whichever communication protocol has been specified (Courier, MODBUS, IEC60870-5-103 and DNP3.0). The platform software converts the information from the database into the format required.

The platform software notifies the protection and control software of all settings changes and logs data as specified by the protection and control software.

2.4.1 Record Logging

The logging function is provided to store all alarms, events, faults and maintenance records. The records for all of these incidents are logged in battery backed-up SRAM in order to provide a non-volatile log of what has happened. The relay maintains four logs: one each for up to 32 alarms, 512 event records, 5 fault records and 5 maintenance records. The logs are maintained such that the oldest record is overwritten with the newest record.

The logging function can be initiated from the protection software or the platform software, and is responsible for logging of a maintenance record in the event of a relay failure. This includes errors that have been detected by the platform software itself or error that are detected by either the system services or the protection software functions. See also the section on *Self-Testing and Diagnostics* later in this section.

2.4.2 Settings Database

The settings database contains all of the settings and data for the relay, including the protection, disturbance recorder and control and support settings. The settings are maintained in non-volatile memory. The platform software's management of the settings database make sure that only one user interface modifies the database settings at any one time. This feature is used to avoid confusion between different parts of the software during a setting change. For changes to protection settings and disturbance recorder settings, the platform software operates a 'scratchpad' in SRAM memory. This allows a number of setting changes to be made in any order but applied to the protection elements, disturbance recorder and saved in the database in non-volatile memory, at the same time. If a setting change affects the protection and control task, the database advises it of the new values.

The database is directly compatible with Courier communications.

2.4.3 Database Interface

The other function of the platform software is to implement the relay's internal interface between the database and each of the relay's user interfaces. The database of settings and measurements must be accessible from all of the relay's user interfaces to allow read and modify operations. The platform software presents the data in the appropriate format for each user interface.

2.5 Protection and Control Software

The protection and control software interfaces with the platform software for settings changes and logging of records, and with the system services software for acquisition of sample data and access to output relays and digital opto-isolated inputs. It also performs the calculations for all of the protection algorithms of the relay. This includes digital signal processing such as Fourier filtering and ancillary tasks such as the disturbance recorder.

The protection and control software task processes all of the protection elements and measurement functions of the relay. It has to communicate with both the system services software and the platform software, and organize its own operations. The protection software has the highest priority of any of the software tasks in the relay, to provide the fastest possible protection response. It also has a supervisor task that controls the start-up of the task and deals with the exchange of messages between the task and the platform software.

2.5.1 Signal Processing

The sampling function filters the digital input signals from the opto-isolators and tracks the frequency of the analog signals. The digital inputs are checked against their previous value over a period of half a cycle. Therefore a change in the state of one of the inputs must be maintained over at least half a cycle before it is registered with the protection and control software.

2.5.2 Programmable Scheme Logic (PSL)

The Programmable Scheme Logic (PSL) allows the relay user to configure an individual protection scheme to suit their own particular application. This is done with programmable logic gates and delay timers.

The input to the PSL is any combination of the status of the digital input signals from the opto-isolators on the input board, the outputs of the protection elements such as protection starts and trips, and the outputs of the fixed PSL. The fixed PSL provides the relay's standard protection schemes. The PSL consists of software logic gates and timers. The logic gates can be programmed to perform a range of different logic functions and can accept any number of inputs. The timers are used either to create a programmable delay or to condition the logic outputs, such as to create a pulse of fixed duration on the output, regardless of the length of the pulse on the input. The outputs of the PSL are the LEDs on the front panel of the relay and the output contacts at the rear.

The execution of the PSL logic is event driven: the logic is processed whenever any of its inputs change, for example as a result of a change in one of the digital input signals or a trip output from a protection element. Also, only the part of the PSL logic that is affected by the particular input change that has occurred is processed. This reduces the amount of processing time that is used by the PSL. The protection and control software updates the logic delay timers and checks for a change in the PSL input signals every time it runs.

This system provides flexibility for the user to create their own scheme logic design. However, it also means that the PSL can be configured into a very complex system, and because of this setting of the PSL is implemented through the PC support package MiCOM S1 Studio.

2.5.3 Function Key Interface

The ten function keys interface directly into the PSL as digital input signals and are processed based on the PSLs event-driven execution. However, a change of state is only recognized when a key press is executed, on average for longer than 200 ms. The time to register a change of state depends on whether the function key press is executed at the start or the end of a protection task cycle, with the additional hardware and software scan time included. A function key press can provide a latched (toggled mode) or output on key press only (normal mode) depending on how it is programmed and can be configured to individual protection scheme requirements. The latched state signal for each function key is written to non-volatile memory and read from non-volatile memory during relay power up, allowing the function key state to be reinstated after power-up if the relay power is lost.

2.5.4 Event and Maintenance Recording

A change in any digital input signal or protection element output signal is used to indicate that an event has taken place. When this happens, the protection and control task sends a message to the supervisor task to show that an event is available to be processed. The protection and control task writes the event data to a fast buffer in SRAM that is controlled by the supervisor task. When the supervisor task receives either an event or fault record message, it instructs the platform software to create the appropriate log in battery backed-up SRAM. The supervisor's buffer is faster than battery backed-up SRAM, therefore the protection software is not delayed waiting for the records to be logged by the platform software. However, if a large number of records to be logged are created in a short time, some may be lost if the supervisor's buffer is full before the platform software is able to create a new log in battery backed-up SRAM. If this occurs, an event is logged to indicate this loss of information.

2.5.5 Precise Event Recorder

The analog values and logic signals are routed from the protection and control software to the disturbance recorder software. The platform software interfaces with the disturbance recorder to allow the stored records to be extracted.

The disturbance recorder operates as a separate task from the protection and control task. It can record the waveforms for up to 8 analogue channels and the values of up to 32 digital signals. For peripheral unit the recording time is user selectable up to a maximum of 10 seconds and for central unit the record duration is fixed to 600ms. The disturbance recorder is supplied with data by the protection and control task once per cycle. The disturbance recorder collates the data that it receives into the required length disturbance record. It attempts to limit the demands it places on memory space by saving the analogue data in compressed format whenever possible. This is done by detecting changes in the analogue input signals and compressing the recording of the waveform when it is in a steady-state condition. The disturbance records can be extracted by MiCOM S1 that can also store the data in COMTRADE format, thus allowing the use of other packages to view the recorded data.

3 SELF-TESTING AND DIAGNOSTICS

The relay includes several self-monitoring functions to check the operation of its hardware and software when it is in service. These are included so that if an error or fault occurs in the relay's hardware or software, the relay is able to detect and report the problem and attempt to resolve it by performing a reboot. The relay must therefore be out of service for a short time, during which the **Healthy** LED on the front of the relay is OFF and, the watchdog contact at the rear is ON. If the reboot fails to resolve the problem, the relay takes itself permanently out of service; the **Healthy** LED stays OFF and watchdog contact stays ON.

If a problem is detected by the self-monitoring functions, the relay stores a maintenance record in battery backed-up SRAM.

The self-monitoring is implemented in two stages:

- firstly a thorough diagnostic check that is performed when the relay is booted-up
- secondly a continuous self-checking operation that checks the operation of the relay's critical functions while it is in service.

3.1 Start-Up Self-Testing

The self-testing that is carried out when the relay is started takes a few seconds to complete, during which time the relay's protection is unavailable. This is shown by the **Healthy** LED on the front of the relay which is ON when the relay has passed all tests and entered operation. If the tests detect a problem, the relay remains out of service until it is manually restored to working order.

The operations that are performed at start-up are:

- System Boot
- Initialization Software
- Platform Software Initialization and Monitoring

3.1.1 System Boot

The integrity of the flash memory is verified using a checksum before the program code and data are copied into SRAM and executed by the processor. When the copy is complete the data then held in SRAM is checked against that in flash memory to ensure they are the same and that no errors have occurred in the transfer of data from flash memory to SRAM. The entry point of the software code in SRAM is then called which is the relay initialization code.

3.1.2 Initialization Software

In the initialization process the relay checks the following.

- The status of the battery
- The integrity of the battery backed-up SRAM that stores event, fault and disturbance records
- The voltage level of the field voltage supply that drives the opto-isolated inputs
- The operation of the LCD controller
- The watchdog operation

When the initialization software routine is complete, the supervisor task starts the platform software.

3.1.3 Platform Software Initialization and Monitoring

In starting the platform software, the relay checks the integrity of the data held in non-volatile memory with a checksum, the operation of the real-time clock, and the IRIG-B board if fitted. The final test that is made concerns the input and output of data; the presence and healthy condition of the input board is checked and the analog data acquisition system is checked through sampling the reference voltage.

At the successful conclusion of all of these tests the relay is entered into service and the protection started-up.

3.2 Continuous Self-Testing

When the relay is in service, it continually checks the operation of the critical parts of its hardware and software. The checking is carried out by the system services software (see section on relay software earlier in this section) and the results reported to the platform software.

The functions that are checked are as follows:

- The flash EPROM containing all program code and language text is verified by a checksum
- The code and constant data held in SRAM is checked against the corresponding data in flash EPROM to check for data corruption
- The SRAM containing all data other than the code and constant data is verified with a checksum
- The non-volatile memory containing setting values is verified by a checksum, whenever its data is accessed
- The battery status
- The level of the field voltage
- The integrity of the digital signal I/O data from the opto-isolated inputs and the relay contacts, is checked by the data acquisition function every time it is executed. The operation of the analog data acquisition system is checked by the acquisition function every time it is executed. This is done by sampling the reference voltage on a spare multiplexed channel
- The operation of the IRIG-B board is checked, where it is fitted, by the software that reads the time and date from the board

If the Ethernet board is fitted, it is checked by the software on the main processor board. If the Ethernet board fails to respond, an alarm is raised and the board is reset in an attempt to resolve the problem

In the unlikely event that one of the checks detects an error in the relay's subsystems, the platform software is notified and it will attempt to log a maintenance record in battery backed-up SRAM. If the problem is with the battery status or the IRIG-B board, the relay continues in operation. However, for problems detected in any other area the relay shuts down and reboots. This result in a period of up to 5 seconds when protection is unavailable, but the complete restart of the relay including all initializations should clear most problems that could occur. An integral part of the start-up procedure is a thorough diagnostic self-check. If this detects the same problem that caused the relay to restart, the restart has not cleared the problem and the relay takes itself permanently out of service. This is indicated by the **Healthy** LED on the front of the relay which goes OFF, and the watchdog contact that goes ON.

Notes:

COMMISSIONING

CHAPTER 11

Date:	08/2015
Products covered by this chapter:	This chapter covers the specific versions of the MiCOM products listed below. This includes ***only*** the following combinations of Software Version and Hardware Suffix.
Hardware Suffix:	M
Software Version:	B0
Connection Diagrams:	10P849xx (xx = 01 to 06)

CONTENTS

1 INTRODUCTION

About MiCOM Range

MiCOM is a comprehensive solution capable of meeting all electricity supply requirements. It comprises a range of components, systems and services from Schneider Electric.

Central to the MiCOM concept is flexibility. MiCOM provides the ability to define an application solution and, through extensive communication capabilities, integrate it with your power supply control system.

The components within MiCOM are:

- P range protection relays;
- C range control products;
- M range measurement products for accurate metering and monitoring;
- S range versatile PC support and substation control packages.

MiCOM products include extensive facilities for recording information on the state and behaviour of the power system using disturbance and fault records. They can also provide measurements of the system at regular intervals to a control centre enabling remote monitoring and control to take place.

For up-to-date information, please see:

www.schneider-electric.com

Note	*During 2011, the International Electrotechnical Commission classified the voltages into different levels (IEC 60038). The IEC defined LV, MV, HV and EHV as follows: LV is up to 1000V. MV is from 1000V up to 35 kV. HV is from 110 kV or 230 kV. EHV is above 230 KV.* *There is still ambiguity about where each band starts and ends. A voltage level defined as LV in one country or sector, may be described as MV in a different country or sector. Accordingly, LV, MV, HV and EHV suggests a possible range, rather than a fixed band. Please refer to your local Schneider Electric office for more guidance.*

The MiCOM P40 range of products includes various devices which have different functions. This chapter includes information related to the Commissioning of one or more of these devices. Many, although not all, of the commissioning tasks are common to these products.

This chapter applies to the MiCOM P40 products shown on the second page of this chapter. Where a particular section or paragraph relates only to one of more of the products, this is stated in the heading or at the beginning of the paragraph or section. If this states “Applicability: All”, this means the following information relates to all the products in shown on the second page of this chapter. Otherwise the Applicability statement will list the MiCOM P40 products which the information covers.

When using this chapter, you (i.e. in your role as the Commissioning Engineer), need to be aware of:

- The MiCOM product number you are commissioning
- The features associated with that MiCOM product number
- The subset of features which have been enabled for the specific piece of equipment you are commissioning
- Any work instructions which determine how the equipment should be installed and which of its functions have been enabled and how they should relate to other equipment
- You will then be able to select which of the following sections/subsections you need to follow. Some of these sections will not be relevant for the particular commissioning tasks you are performing. By way of example, if the MiCOM device you are commissioning has an Auto-Reclose function you need to refer to the sections which cover Auto-Reclose, otherwise you can ignore them.
- You should start using this chapter at the beginning and work your way through to the end. At key points in the chapter, you will have to know what technical functions have been enabled, as you will be asked to omit certains sections of this chapter if they are not relevant for your current commissioning task.

MiCOM P40 relays are fully numerical in their design, implementing all protection and non-protection functions in software. The relays use a high degree of self-checking and give an alarm in the unlikely event of a failure. Therefore, the commissioning tests do not need to be as extensive as with non-numeric electronic or electro-mechanical relays.

To commission numeric relays, it is only necessary to verify that the hardware is functioning correctly and the application-specific software settings have been applied to the relay. It is considered unnecessary to test every function of the relay if the settings have been verified by one of the following methods:

- Extracting the settings applied to the relay using appropriate setting software (preferred method)
- Using the operator interface

To confirm that the product is operating correctly once the application-specific settings have been applied, perform a test on a single protection element.

Unless previously agreed to the contrary, the customer is responsible for determining the application-specific settings to be applied to the relay and for testing any scheme logic applied by external wiring or configuration of the relay's internal programmable scheme logic.

Blank commissioning test and setting records are provided within this manual for completion as required.

As the relay's menu language is user-selectable, the Commissioning Engineer can change it to allow accurate testing as long as the menu is restored to the customer's preferred language on completion.

To simplify the specifying of menu cell locations in these Commissioning Instructions, they are given in the form [courier reference: COLUMN HEADING, Cell Text]. For example, the cell for selecting the menu language (first cell under the column heading) is in the System Data column (column 00) so it is given as [0001: SYSTEM DATA, Language].

Warning	**Before carrying out any work on the equipment, you should be familiar with the contents of the Safety Information chapter/safety guide SFTY/4LM/C11 or later issue, the Technical Data chapter and the ratings on the equipment rating label.**

Caution	**The relay must not be disassembled in any way during commissioning.**

2 SETTING FAMILIARISATION

When first commissioning a relay, allow sufficient time to become familiar with how to apply the settings.

The *Relay Menu Database document* and the *Introduction* or *Settings* chapters contain a detailed description of the menu structure of Schneider Electric relays. The relay menu database is a separate document which can be downloaded from our website:

www.schneider-electric.com

With the secondary front cover in place, all keys except the ⏎ key are accessible. All menu cells can be read. LEDs and alarms can be reset. However, no protection or configuration settings can be changed, or fault and event records cleared.

Removing the secondary front cover allows access to all keys so that settings can be changed, LEDs and alarms reset, and fault and event records cleared. However, to make changes to menu cells, the appropriate user role and password is needed.

Alternatively, if a portable PC with suitable setting software is available (such as MiCOM S1 Studio), the menu can be viewed one page at a time, to display a full column of data and text. This PC software also allows settings to be entered more easily, saved to a file for future reference, or printed to produce a settings record. Refer to the PC software user manual for details. If the software is being used for the first time, allow sufficient time to become familiar with its operation.

3 EQUIPMENT REQUIRED FOR COMMISSIONING

3.1 Minimum Equipment Required

The minimum equipment needed varies slightly, depending on the features provided by each type of MiCOM product. The list of minimum equipment is given below:

- Multifunctional dynamic current and voltage injection test set.
- Multimeter with suitable ac current range, and ac and dc voltage ranges of 0 - 440V and 0 - 250V respectively.
- Continuity tester (if not included in multimeter).
- Phase angle meter.
- Phase rotation meter.

Note	*Modern test equipment may contain many of the above features in one unit.*

- Fiber optic power meter.
- Fiber optic test leads (type and number according to application).
- P594 Commissioning Instructions. If the scheme features P594 time synchronizing devices, these will need commissioning. Separate documentation containing commissioning instructions is available for the P594.
- Overcurrent test set with interval timer
- 110 V ac voltage supply (if stage 1 of the overcurrent function is set directional)
- 100 Ω precision wire wound or metal film resistor, 0.1% tolerance (0°C ±2°C)

3.2 Optional Equipment

- Multi-finger test plug type MMLB01 (if test block type MMLG is installed)
- An electronic or brushless insulation tester with a dc output not exceeding 500 V (for insulation resistance testing when required)
- A portable PC, with appropriate software (enabling the rear communications port to be tested, if this is to be used, and saves considerable time during commissioning)
- KITZ K-Bus to EIA(RS)232 protocol converter (if the first rear EIA(RS)485 K-Bus port or second rear port configured for K-Bus is being tested and one is not already installed)
- EIA(RS)485 to EIA(RS)232 converter (if first rear EIA(RS)485 port or second rear port configured for EIA(RS)485 is being tested)
- A printer, for printing a setting record from the portable PC

4 PRODUCT CHECKS

These product checks cover all aspects of the relay that need to be checked to ensure that:

- it has not been physically damaged before commissioning
- it is functioning correctly and
- all input quantity measurements are within the stated tolerances

If the application-specific settings have been applied to the relay before commissioning, it is advisable to make a copy of the settings to allow their restoration later.

If Programmable Scheme Logic (PSL) (other than the default settings with which the relay is supplied) has been applied, the default settings should be restored before commissioning. This can be done by:

- Obtaining a setting file from the customer. This requires a portable PC with appropriate setting software for transferring the settings from the PC to the relay.
- Extracting the settings from the relay itself. This requires a portable PC with appropriate setting software.
- Manually creating a setting record. This could be done by stepping through the front panel menu using the front panel user interface.

If password protection is enabled, and the customer has changed password 2 that prevents unauthorized changes to some of the settings, either the revised password 2 should be provided, or the customer should restore the original password before testing is started.

Note	*If the password has been lost, a recovery password can be obtained from Schneider Electric by quoting the serial number of the relay. The recovery password is unique to that relay and will not work on any other relay.*

Warning	**Before carrying out any work on the equipment, you should be familiar with the contents of the Safety Information chapter/safety guide SFTY/4LM/C11 or later issue, the Technical Data chapter and the ratings on the equipment rating label.**

4.1 With the Device De-Energised

The following group of tests should be carried out without the auxiliary supply applied to the relay and with the trip circuit isolated.

Before inserting the test plug, refer to the scheme diagram to ensure this will not cause damage or a safety hazard. For example, the test block may be associated with protection current transformer circuits. Before the test plug is inserted into the test block, make sure the sockets in the test plug which correspond to the current transformer secondary windings are linked.

Warning	**The current and voltage transformer connections must be isolated from the relay for these checks. If a P991 or MMLG test block is provided, insert the test plug type P992 or MMLB01, which open-circuits all wiring routed through the test block.**

Danger	**Never open-circuit the secondary circuit of a current transformer because the high voltage produced may be lethal. It could also damage insulation.**

If a test block is not provided, isolate the voltage transformer supply to the relay using the panel links or connecting blocks. Short-circuit and disconnect the line current transformers from the relay terminals. Where means of isolating the auxiliary supply and trip circuit (such as isolation links, fuses and MCB) are provided, these should be used. If this is impossible, the wiring to these circuits must be disconnected and the exposed ends suitably terminated to prevent them from being a safety hazard.

4.1.1 Visual Inspection

Caution	**Check the rating information under the top access cover on the front of the relay. Check that the relay being tested is correct for the protected line or circuit. Ensure that the circuit reference and system details are entered onto the setting record sheet. Double-check the CT secondary current rating, and be sure to record the actual CT tap which is in use.**

Carefully examine the relay to see that no physical damage has occurred since installation.

Ensure that the case earthing connections, at the bottom left-hand corner at the rear of the relay case, are used to connect the relay to a local earth bar using an adequate conductor.

4.1.2 Insulation

Insulation resistance tests are only necessary during commissioning if it is required for them to be done and they have not been performed during installation.

Isolate all wiring from the earth and test the insulation with an electronic or brushless insulation tester at a dc voltage not exceeding 500V. Terminals of the same circuits should be temporarily connected together.

The main groups of device terminals are:

a) Auxiliary voltage supply
b) Field voltage output and opto-isolated control inputs
c) Device contacts
d) Case earth

The insulation resistance should be greater than 100MΩ at 500V.

On completion of the insulation resistance tests, ensure all external wiring is correctly reconnected to the device.

4.1.3 External Wiring

Caution	**Check that the external wiring is correct to the relevant relay diagram and scheme diagram. Ensure as far as practical that phasing/phase rotation appears to be as expected. The relay diagram number appears on the rating label under the top access cover on the front of the relay.** **Schneider Electric supply the corresponding connection diagram with the order acknowledgement for the relay.**

If a P991 or MMLG test block is provided, check the connections against the wiring diagram. It is recommended that the supply connections are to the live side of the test block (colored orange with the odd numbered terminals 1, 3, 5, 7, and so on). The auxiliary supply is normally routed through terminals 13 (supply positive) and 15 (supply negative), with terminals 14 and 16 connected to the relay's positive and negative auxiliary supply terminals respectively. However, check the wiring against the schematic diagram for the installation to ensure compliance with the customer's normal practice.

4.1.4 Watchdog Contacts

Using a continuity tester, check that the watchdog contacts are in the states shown in the *Watchdog contact status* table for a de-energized relay.

Terminals		Contact State	
		Relay De-energized	Relay Energized
N11 – N12		Closed	Open
N13 – N14		Open	Closed

Table 1 - Watchdog contact status

4.1.5 Auxiliary Supply

Caution	**The relay can be operated from either a dc only or an ac/dc auxiliary supply depending on the relay's nominal supply rating. The incoming voltage must be within the operating range specified in the following table.**

Without energizing the relay, measure the auxiliary supply to ensure it is within the operating range.

Note	*The relay can withstand an ac ripple of up to 12% of the upper rated voltage on the dc auxiliary supply.*

Nominal Supply Rating		Operating Ranges	
dc	ac	dc	ac
24 - 32V dc	-	19 - 38V dc	-
48 - 110V dc	-	37 - 150V dc	-
110 - 250V dc	100 - 240V ac rms	87 - 300V dc	80 - 265V ac

Table 2 – Operational range of auxiliary supply VX.

Caution	**Do not energize the relay using the battery charger with the battery disconnected as this can irreparably damage the relay's power supply circuitry.**

Caution	**Energize the relay only if the auxiliary supply is within the operating range. If a test block is provided, it may be necessary to link across the front of the test plug to connect the auxiliary supply to the relay.**

4.2 With the Device Energised

The following group of tests verify that the relay hardware and software is functioning correctly and should be carried out with the auxiliary supply applied to the relay.

4.2.1 Watchdog Contacts

Using a continuity tester, check that the watchdog contacts are in the states shown in the *Watchdog contact statu*s table for an energized relay.

4.2.2 Date and Time

Before setting the date and time, ensure that the factory-fitted battery isolation strip that prevents battery drain during transportation and storage has been removed. With the lower access cover open, the presence of the battery isolation strip can be checked by a red tab protruding from the positive side of the battery compartment. Lightly pressing the battery to prevent it falling out of the battery compartment, pull the red tab to remove the isolation strip.

The data and time should now be set to the correct values. The method of setting depends on whether accuracy is being maintained through the optional inter-range instrumentation group standard B (IRIG-B) port on the rear of the relay.

4.2.2.1 With an IRIG-B Signal

Note	*For P741 the IRIG-B signal may apply to the Central Unit only.*

If a satellite time clock signal conforming to IRIG-B is provided and the relay has the optional IRIG-B port fitted, the satellite clock equipment should be energized.

To allow the relay's time and date to be maintained from an external IRIG-B source cell [DATE and TIME, IRIG-B Sync.] must be set to **Enabled**.

Ensure the relay is receiving the IRIG-B signal by checking that cell [DATE and TIME, IRIG-B Status] reads **Active**.

Once the IRIG-B signal is active, adjust the time offset of the universal coordinated time (satellite clock time) on the satellite clock equipment so that local time is displayed.

Check the time, date and month are correct in cell [0801: DATE and TIME, Date/Time]. The IRIG-B signal does not contain the current year so needs to be set manually in this cell.

If the auxiliary supply fails, with a battery fitted in the compartment behind the bottom access cover, the time and date is maintained. Therefore, when the auxiliary supply is restored, the time and date are correct and need not be set again.

To test this, remove the IRIG-B signal, then remove the auxiliary supply from the relay. Leave the relay de-energized for approximately 30 seconds. On re-energization, the time in cell [DATE and TIME, Date/Time] should be correct. Then reconnect the IRIG-B signal.

4.2.2.2 Without an IRIG-B Signal

Note	*For P741 the IRIG-B signal may not apply to the Central Unit only. For the P742/P743 it may apply to the Peripheral Unit only.*

If the time and date is not being maintained by an IRIG-B signal, ensure that cell [0804: DATE and TIME, IRIG-B Sync.] is set to **Disabled**.

Set the date and time to the correct local time and date using cell [0801: DATE and TIME, Date/Time].

If the auxiliary supply fails, with a battery fitted in the compartment behind the bottom access cover, the time and date are maintained. Therefore when the auxiliary supply is restored, the time and date are correct and need not be set again.

To test this, remove the auxiliary supply from the relay for approximately 30 seconds. On re-energization, the time in cell [0801: DATE and TIME, Date/Time] should be correct.

4.2.3 Light Emitting Diodes (LED's)

On power-up, the green LED should switch on and stay on, indicating that the relay is healthy. The relay has non-volatile memory which stores the state (on or off) of the alarm, trip and, if configured to latch, user-programmable LED indicators when the relay was last energized from an auxiliary supply. Therefore, these indicators may also switch on when the auxiliary supply is applied.

If any of these LEDs are on, reset them before proceeding with further testing. If the LED successfully resets (the LED switches off), there is no testing required for that LED because it is known to be operational.

Note	*It is likely that alarms related to the communications channels will not reset at this stage.*

4.2.3.1 Testing the Alarm and Out Of Service LED's

The alarm and out of service LEDs can be tested using the **COMMISSIONING TESTS** menu column. Set cell [0F0D: COMMISSIONING TESTS, Test Mode] to **Contacts Blocked**. Check that the out of service LED is on continuously and the alarm LED flashes.

It is not necessary to return cell [0F0D: COMMISSIONING TESTS, Test Mode] to **Disabled** at this stage because the test mode will be required for later tests.

4.2.3.2 Testing the Trip LED

The trip LED can be tested by initiating a manual circuit breaker trip from the relay. However, the trip LED will operate during the setting checks performed later. Therefore, no further testing of the trip LED is required at this stage.

4.2.3.3 Testing the User-Programmable LEDS

To test the user-programmable LEDs set cell [0F10: COMMISSIONING TESTS, Test LEDs] to **Apply Test**. Check that all the programmable LEDs on the relay switch on.

In the MiCOM P741, P743, P746 & P849:

- The 'Red LED Status' cell is an 18-bit binary string that indicates which of the user-programmable LEDs on the device are illuminated when accessing the device from a remote location, a '1' indicating a particular Red LED is lit.
- The 'Green LED Status' cell is an 18-bit binary string that indicates which of the user-programmable LEDs on the device are illuminated when accessing the device from a remote location, a '1' indicating a particular Green LED is lit.
- If a 'Red LED Status' cell AND the same 'Green LED Status' cell are at '1' the particular LED is lit Orange
- If a 'Red LED Status' cell AND the same 'Green LED Status' cell are at '0' the particular LED is not lit.

4.2.4 Field Voltage Supply

The relay generates a field voltage of nominally 48 V that can be used to energize the opto-isolated inputs (alternatively the substation battery may be used).

Measure the field voltage across terminals 7 and 9 on the terminal block shown in the following table. Check that the field voltage is in the range 40 V to 60 V when no load is connected and that the polarity is correct.

Repeat for terminals 8 and 10

Supply Rail	Terminals
+ve	N7 & N8
–ve	N9 & N10

Table 3 - Field voltage terminals

4.2.5 Input Opto-Isolators

This test checks that all the opto-isolated inputs on the relay are functioning correctly.

The opto-isolated inputs should be energised one at a time, see the *Connection Diagrams* chapter for terminal numbers. Ensuring correct polarity, connect the field supply voltage to the appropriate terminals for the input being tested.

Note	*The opto-isolated inputs may be energised from an external dc auxiliary supply (e.g. the station battery) in some installations. Check that this is not the case before connecting the field voltage otherwise damage to the relay may result.*

The status of each opto-isolated input can be viewed using either cell [SYSTEM DATA, Opto I/P Status] or [COMMISSION TESTS, Opto I/P Status], a '1' indicating an energised input and a '0' indicating a de-energised input. When each opto-isolated input is energised one of the characters on the bottom line of the display will change to indicate the new state of the inputs.

4.2.6 Output Relays

This test checks that all the output relays are functioning correctly.

See external Connection Diagrams Chapter (P849/EN IN) for terminal numbers.

Ensure that the cell [xxxx: COMMISSIONING TESTS, Test Mode] is set to **Contacts Blocked**. (xxxx = 0F0E for P44x/P44y, 0F0D for P14x, P24x, P34x, P54x, P547, P64x or P841).

The output relays should be energized one at a time. To select output relay 1 for testing, set cell [xxxx: COMMISSIONING TESTS, Test Pattern] to 00000000000000000000000000000001. (xxxx = 0F0F for P44x/P44y, 0F0E for P14x, P24x, P34x, P445, P54x, P547, P64x or P841).

Connect a continuity tester across the terminals corresponding to output relay 1 as shown in the relevant external connection diagram in the *Installation* chapter.

To operate the output relay, set cell [xxxx: COMMISSIONING TESTS, Contact Test] to **Apply Test**. Operation is confirmed by the continuity tester operating for a normally open contact and ceasing to operate for a normally closed contact. Measure the resistance of the contacts in the closed state. (xxxx = 0F11 for P44x, 0F0F for P14x, P24x, P34x, P44y, P445, P54x, P547, P64x or P841).

Reset the output relay by setting cell [xxxx: COMMISSIONING TESTS, Contact Test] to **Remove Test**. (xxxx = 0F11 for P44x, 0F0F for P14x, P24x, P34x, P44y, P445, P54x, P547 or P64x).

Note	*Ensure that the thermal ratings of anything connected to the output relays during the contact test procedure are not exceeded by the associated output relay being operated for too long. Keep the time between application and removal of contact test to a minimum.*

Repeat the test for the rest of the relays (the numbers depend on the model).

Return the relay to service by setting cell [0F0D: COMMISSIONING TESTS, Test Mode] to **Disabled**.

4.2.7 Rear Communications Port

This test should only be performed where the relay is to be accessed from a remote location and varies depending on the communications standard adopted.

It is not the intention of the test to verify the operation of the complete system from the relay to the remote location, just the relay's rear communications port and any protocol converter necessary.

A variety of communications protocols may be available. For further details, please see whichever of these sections are relevant for the device you are commissioning:

4.2.7.1 Courier Communications

If a K-Bus to EIA(RS)232 KITZ protocol converter is installed, connect a portable PC running the appropriate software (such as MiCOM S1 Studio or PAS&T) to the incoming (remote from relay) side of the protocol converter.

If a KITZ protocol converter is not installed, it may not be possible to connect the PC to the relay installed. In this case a KITZ protocol converter and portable PC running appropriate software should be temporarily connected to the relay's first rear K-Bus port. The terminal numbers for the relay's first rear K-Bus port are shown in the following table. However, as the installed protocol converter is not being used in the test, only the correct operation of the relay's K-Bus port will be confirmed.

Ensure that the communications baud rate and parity settings in the application software are set the same as those on the protocol converter (usually a KITZ but could be a SCADA RTU). The relays courier address in cell [COMMUNICATIONS, Remote Access] must be set to a value between 6 (P741) and 34. Check that communications can be established with this relay using the portable PC.

Check that, using the Master Station, communications with the relay can be established.

Note:	*The first rear communication port (terminal N17-18) can be either K-Bus or EIA(RS)485.*

4.2.8 Second Rear Communications Port

This test should only be performed where the relay is to be accessed from a remote location and varies depending on the communications standard being adopted.

It is not the intention of the test to verify the operation of the complete system from the relay to the remote location, just the relay's rear communications port and any protocol converter necessary.

A variety of communications protocols may be available. For further details, please see whichever of these sections are relevant for the device you are commissioning:

4.2.8.1 K-Bus Configuration

If a K-Bus to EIA(RS)232 KITZ protocol converter is installed, connect a portable PC running the appropriate software (MiCOM S1 Studio or PAS&T) to the incoming (remote from relay) side of the protocol converter.

If a KITZ protocol converter is not installed, it may not be possible to connect the PC to the relay installed. In this case a KITZ protocol converter and portable PC running appropriate software should be temporarily connected to the relay's second rear communications port configured for K-Bus. The terminal numbers for the relay's K-Bus port are shown in the following table. However, as the installed protocol converter is not being used in the test, only the correct operation of the relay's K-Bus port is confirmed.

Pin*	Connection
4	EIA(RS)485 - 1 (+ ve)
7	EIA(RS)485 - 2 (- ve)
* All other pins unconnected.	

Table 4 - Second rear communications port K-Bus terminals

Ensure that the communications baud rate and parity settings in the application software are set the same as those on the protocol converter (usually a KITZ but could be a SCADA RTU). The relay's Courier address in cell [0E90: COMMUNICATIONS, RP2 Address] must be set to a value between 1 and 254. The second rear communication's port configuration [0E88: COMMUNICATIONS RP2 Port Config.] must be set to K-Bus.

Check that communications can be established with this relay using the portable PC.

4.2.8.2 EIA(RS)485 Configuration

If an EIA(RS)485 to EIA(RS)232 converter (Schneider Electric CK222) is installed, connect a portable PC running the appropriate software (MiCOM S1 Studio) to the EIA(RS)232 side of the converter and the second rear communications port of the relay to the EIA(RS)485 side of the converter.

The terminal numbers for the relay's EIA(RS)485 port are shown in the *Second rear communications port EIA(RS)232 terminals* table.

Ensure that the communications baud rate and parity settings in the application software are the same as those in the relay. The relay's Courier address in cell [0E90: COMMUNICATIONS, RP2 Address] must be set to a value between 1 and 254. The second rear communications port's configuration [0E88: COMMUNICATIONS RP2 Port Config.] must be set to EIA(RS)485.

Check that communications can be established with this relay using the portable PC.

4.2.8.3 EIA(RS)232 Configuration

Connect a portable PC running the appropriate software (MiCOM S1 Studio) to the rear EIA(RS)232 port of the relay. This port is actually compliant with EIA(RS)574; the 9-pin version of EIA(RS)232, see www.tiaonline.org.

The second rear communications port connects using the 9-way female D-type connector (SK4). The connection is compliant with EIA(RS)574.

Pin	Connection
1	No Connection
2	RxD
3	TxD
4	DTR#
5	Ground
6	No Connection
7	RTS#
8	CTS#
9	No Connection
# These pins are control lines for use with a modem.	

Table 5 - Second rear communications port EIA(RS)232 terminals

Connections to the second rear port configured for EIA(RS)232 operation can be made using a screened multi-core communication cable up to 15 m long, or a total capacitance of 2500 pF. Terminate the cable at the relay end with a 9-way, metal-shelled, D-type male plug. The terminal numbers for the relay's EIA(RS)232 port are shown in the previous table.

Ensure that the communications baud rate and parity settings in the application software are set the same as those in the relay. The relay's Courier address in cell [0E90: COMMUNICATIONS, RP2 Address] must be set to a value between 1 and 254. The second rear communication's port configuration [0E88: COMMUNICATIONS RP2 Port Config] must be set to EIA(RS)232.

Check that communications can be established with this relay using the portable PC.

5 COMMISSIONING TOOLS

To help minimize the time needed to test MiCOM relays the relay provides several test facilities under the '**COMMISSION TESTS**' menu heading. There are menu cells which allow the status of the opto-isolated inputs, output relay contacts, internal Digital Data Bus (DDB) signals and user-programmable LEDs to be monitored. Additionally there are cells to test the operation of the output contacts, user-programmable LEDs and, where available, the auto-reclose cycles.

The following table shows the relay menu of commissioning tests, including the available setting ranges and factory defaults. Each of the main menu tests are described in more detail in the following sections.

COMMISSION TESTS for P849		
Menu Text	**Default Setting**	**Settings**
Opto I/P Status	-	-
Relay O/P Status	-	-
Test Port Status	-	-
LED Status	-	-
Monitor Bit 1	256 - (LED 1)	0 to 2047
Monitor Bit 2	258 - (LED 2)	0 to 2047
Monitor Bit 3	260 - (LED 3)	0 to 2047
Monitor Bit 4	262 - (LED 4)	0 to 2047
Monitor Bit 5	264 - (LED 5)	0 to 2047
Monitor Bit 6	266 - (LED 6)	0 to 2047
Monitor Bit 7	268 - (LED 7)	0 to 2047
Monitor Bit 8	270 - (LED 8)	0 to 2047
Test Mode	Disabled	Disabled, Test Mode, Contacts Blocked
Test Pattern	All bits set to 0	0 = Not Operated, 1 = Operated
Contact Test	No Operation	No Operation, Apply Test, Remove Test
Test LEDs	No Operation	No Operation, Apply Test
Test Auto-reclose	No Operation	No Operation, 3 Pole Test
Red LED Status	-	-
Green LED Status	-	-
Note	*See Relay Menu Database for details of DDB signals*	

Table 6 - Commission Tests

5.1 Opto I/P Status

This menu cell displays the status of the relay's opto-isolated inputs as a binary string, a '**1**' indicating an energized opto-isolated input and a '**0**' a de-energized one. If the cursor is moved along the binary numbers the corresponding label text will be displayed for each logic input.

It can be used during commissioning or routine testing to monitor the status of the opto-isolated inputs whilst they are sequentially energized with a suitable dc voltage.

5.2 Relay O/P Status

This menu cell displays the status of the Digital Data Bus (DDB) signals that result in energization of the output relays as a binary string, a '**1**' indicating an operated state and '**0**' a non-operated state. If the cursor is moved along the binary numbers the corresponding label text will be displayed for each relay output.

The information displayed can be used during commissioning or routine testing to indicate the status of the output relays when the relay is '**in service**'. Additionally fault finding for output relay damage can be performed by comparing the status of the output contact under investigation with it's associated bit.

Note	*When the '**Test Mode**' cell is set to '**Enabled**' this cell will continue to indicate which contacts would operate if the relay was in-service, it does not show the actual status of the output relays.*

5.3 Test Port Status

This menu cell displays the status of the eight Digital Data Bus (DDB) signals that have been allocated in the '**Monitor Bit**' cells. If the cursor is moved along the binary numbers the corresponding DDB signal text string will be displayed for each monitor bit.

By using this cell with suitable monitor bit settings, the state of the DDB signals can be displayed as various operating conditions or sequences are applied to the relay. Thus the Programmable Scheme Logic (PSL) can be tested.

As an alternative to using this cell, the optional monitor/download port test box can be plugged into the monitor/download port located behind the bottom access cover. Details of the monitor/download port test box can be found in the *Using a Monitor/Download Port Test Box* section of this chapter.

5.4 LED Status

The '**LED Status**' is an eight bit binary strings that indicate which of the user-programmable LEDs on the relay are illuminated when accessing the relay from a remote location, a '**1**' indicating a particular LED is lit and a '**0**' not lit.

5.5 Monitor Bits 1 to 8

The eight '**Monitor Bit**' cells allow the user to select the status of which digital data bus signals can be observed in the '**Test Port Status**' cell or via the monitor/download port.

Each '**Monitor Bit**' is set by entering the required Digital Data Bus (DDB) signal number from the list of available DDB signals in the Programmable Logic chapter. The pins of the monitor/download port used for monitor bits are given in the following table. The signal ground is available on pins 18, 19, 22 and 25.

Monitor bit	1	2	3	4	5	6	7	8
Monitor/download port pin	11	12	15	13	20	21	23	24

The required DDB signal numbers are 0 – 2047.

Table 7 - Monitor bit pins

Warning **The monitor/download port is not electrically isolated against induced voltages on the communications channel. It should therefore only be used for local communications.**

5.6 Test Mode

The **Test Mode** menu cell (in the **COMMISSION TESTS** column) is used to allow secondary injection testing to be performed on the relay.

To select test mode set the Test Mode menu cell to '**Test Mode**'. It causes an alarm condition to be recorded, the yellow ALARM LED to light and an alarm message '**Test Mode Alm**' to be generated.

Test Mode freezes any information stored in the **CB CONDITION** column and (in IEC60870-5-103 builds) changes the Cause Of Transmission (COT) to Test Mode. For relays supporting IEC 61850 Edition 2, the test bit for data quality attribute shall set to TRUE, and the Logical Device Mode will set to test.

Test mode can also be enabled by energizing an opto mapped to the **Test Mode** signal.

To enable testing of output contacts set the **Test Mode** cell to **Contacts Blocked**. It causes an alarm condition to be recorded, the yellow ALARM LED to light and an alarm message '**Contacts Blk Alm**' to be generated.

In **Contact Blocked** mode, the protection function still works but the contacts will not operate. Also the **test pattern** and contact test functions are visible, which can be used to manually operate the output contacts. For relays supporting IEC 61850 Edition 2, the test bit for data quality attribute shall set to TRUE, and the Logical Device Mode will set to test/blocked.

Contacts Blocked can also be enabled by energizing an opto mapped to the **Contacts Blocked** signal.

Once testing is complete the cell must be set back to '**Disabled**' to restore the relay back to service.

WARNING **If you use or enable Test Mode, you must disable Test Mode before putting the relay back into active service. IT IS POTENTIALLY EXTREMELY UNSAFE TO ATTEMPT TO USE ANY RELAY WHICH IS STILL IN TEST MODE IN ACTIVE SERVICE.**

5.7 Test Pattern

The '**Test Pattern**' cell is used to select the output relay contacts that will be tested when the '**Contact Test**' cell is set to '**Apply Test**'. The cell has a binary string with one bit for each user-configurable output contact which can be set to '**1**' to operate the output under test conditions and '**0**' to not operate it.

5.8 Contact Test

When the '**Apply Test**' command in this cell is issued the contacts set for operation (set to '**1**') in the '**Test Pattern**' cell change state. After the test has been applied the command text on the LCD will change to '**No Operation**' and the contacts will remain in the Test State until reset issuing the '**Remove Test**' command. The command text on the LCD will again revert to '**No Operation**' after the '**Remove Test**' command has been issued.

Note	*When the '**Test Mode**' cell is set to '**Enabled**' the '**Relay O/P Status**' cell does not show the current status of the output relays and hence can not be used to confirm operation of the output relays. Therefore it will be necessary to monitor the state of each contact in turn.*

5.9 Test LEDs

When the '**Apply Test**' command in this cell is issued the eight/eighteen user-programmable LEDs will illuminate for approximately 2 seconds before they extinguish and the command text on the LCD reverts to '**No Operation**'.

5.10 Test Auto-Reclose

Where the relay provides an auto-reclose function, this cell will be available for testing the sequence of circuit breaker trip and auto-reclose cycles with the settings applied.

Issuing the command '**3 Pole Trip**' will cause the relay to perform the first three-phase trip/reclose cycle so that associated output contacts can be checked for operation at the correct times during the cycle. Once the trip output has operated the command text will revert to '**No Operation**' whilst the rest of the auto-reclose cycle is performed. To test subsequent three-phase auto-reclose cycles repeat the '**3 Pole Trip**' command.

Note	*The factory settings for the relay's programmable scheme logic has the '**AR Trip Test**' signal mapped to relay 3. If the programmable scheme logic has been changed, it is essential that this signal remains mapped to relay 3 for the '**Test Auto-reclose**' facility to work.*

5.11 Red LED Status and Green LED Status

The **Red LED Status** and **Green LED Status** cells are 18-bit binary strings that show which of the user-programmable LEDs on the relay are ON when accessing the relay from a remote location. **1** indicates a particular LED is ON and a **0** OFF. When the status of a particular LED in both cells is **1**, this means the LED is yellow.

5.12 Using a Monitor/Download Port Test Box

A monitor/download port test box containing 8 LEDs and a switchable audible indicator is available from Schneider Electric, or one of their regional sales offices. It is housed in a small plastic box with a 25-pin male D-connector that plugs directly into the relay's monitor/download port. There is also a 25-pin female D-connector which allows other connections to be made to the monitor/download port whilst the monitor/download port test box is in place.

Each LED corresponds to one of the monitor bit pins on the monitor/download port with '**Monitor Bit 1**' being on the left hand side when viewing from the front of the relay. The audible indicator can either be selected to sound if a voltage appears on any of the eight monitor pins or remain silent so that indication of state is by LED alone.

6 SETTING CHECKS

The setting checks ensure that all of the application-specific relay settings (both the relay's function and Programmable Scheme Logic (PSL) settings) for the particular installation have been correctly applied to the relay.

Caution **The trip circuit should remain isolated during these checks to prevent accidental operation of the associated circuit breaker.**

6.1 Apply Application-Specific Settings

There are different methods of applying the settings:

- Transferring settings from a pre-prepared setting file to the relay using a portable PC running the appropriate software (such as MiCOM S1 Studio). Use the front EIA(RS)232 port (under the bottom access cover), or the first rear communications port (Courier protocol with a KITZ protocol converter connected), or the second rear communications port. This is the preferred method for transferring function settings as it is much faster and there is less margin for error. If PSL other than the default settings with which the relay is supplied is used, this is the only way of changing the settings.

  If a setting file has been created for the particular application and provided on a memory device, the commissioning time is further reduced, especially if application-specific PSL is applied to the relay.

- Enter the settings manually using the relay's operator interface. This method is not suitable for changing the PSL.

Caution **When the installation needs application-specific Programmable Scheme Logic (PSL), it is essential that the appropriate .psl file is downloaded (sent) to the relay, for each setting group that will be used. If the user fails to download the required .psl file to any setting group that may be brought into service, the factory default PSL will still be resident. This may have severe operational and safety consequences.**

6.2 Check Application Settings

Carefully check applied settings against the required application-specific settings to ensure they have been entered correctly. However, this is not considered essential if a customer-prepared setting file on a memory device has been transferred to the relay using a portable PC.

There are two methods of checking the settings:

- Extract the settings from the relay using a portable PC running the appropriate software (MiCOM S1 Studio) using the front EIA(RS)232 port, under the bottom access cover, or the first rear communications port (Courier protocol with a KITZ protocol converter connected), or the second rear communications port. Compare the settings transferred from the relay with the original written application-specific setting record (for cases where the customer has only provided a printed copy of the required settings but a portable PC is available).
- Step through the settings using the relay's operator interface and compare them with the original application-specific setting record.

Unless previously agreed to the contrary, the application-specific PSL is not checked as part of the commissioning tests.

Due to the versatility and possible complexity of the PSL, it is beyond the scope of these commissioning instructions to detail suitable test procedures. Therefore, when PSL tests must be performed, written tests that satisfactorily demonstrate the correct operation of the application-specific scheme logic should be devised by the engineer who created it. These tests should be provided to the Commissioning Engineer with the memory device containing the PSL setting file.

7 FINAL CHECKS

The tests are now complete.

Caution	**Remove all test or temporary shorting leads. If it has been necessary to disconnect any of the external wiring from the relay to perform the wiring verification tests, make sure all connections are replaced according to the relevant external connection or scheme diagram.**

Ensure that the relay is restored to service by checking that cell [0F0F: COMMISSIONING TESTS, Test Mode] is set to **Disabled**.
(0F0D (not 0F0F) for P14x/P24x/P34x/P341/P44y/P54x/P841).

If the menu language was changed to allow accurate testing, it should now be restored to the customer's preferred language.

If a P991/MMLG test block is installed, remove the P992/MMLB01 test plug and replace the MMLG cover so that the protection is put into service.

Ensure that all event records, fault records, disturbance records, alarms and LEDs have been reset before leaving the relay.

If applicable, replace the secondary front cover on the relay.

TEST AND SETTINGS RECORDS

CHAPTER 12

Date:	08/2015
Products covered by this chapter:	This chapter covers the specific versions of the MiCOM products listed below. This includes ***only*** the following combinations of Software Version and Hardware Suffix.
Hardware Suffix:	M
Software Version:	B0
Connection Diagrams:	10P849xx (xx = 01 to 06)

CONTENTS

Notes:

1 TEST RECORD

1.1 Date

Date:		Engineer:	
Station:		Circuit:	
		System Frequency:	…… Hz
VT Ratio:	…… / …… V	CT Ratio (tap in use):	…… /A

1.2 Front Plate Information

Relay type	MiCOM P……
Model number	
Serial number	
Rated current In	
Rated voltage Vn	
Auxiliary voltage Vx	

1.3 Test Equipment Used

This section should be completed to allow future identification of protective devices that have been commissioned using equipment that is later found to be defective or incompatible but may not be detected during the commissioning procedure.

Overcurrent test set	Model: Serial No:	
Injection test set	Model: Serial No:	
Phase angle meter	Model: Serial No:	
Phase rotation meter	Model: Serial No:	
Optical power meter	Model: Serial No:	
Insulation tester	Model: Serial No:	
Setting software:	Type: Version:	

1.4 Checklist

	Have all relevant safety instructions been followed?	Yes	☐	No	☐	
	In the following Complete or delete as appropriate (na = Not Applicable, nm = Not Measured). Refer to the Connection Diagrams chapter for "Normally open" and "Change over" output relays location					
4	Product Checks					
4.1	With the device de-energised					
4.1.1	Visual inspection					
	Device damaged?	Yes	☐	No	☐	
	Rating information correct for installation?	Yes	☐	No	☐	
	Case earth installed?	Yes	☐	No	☐	
4.1.2	Current transformer shorting contacts close?	Yes	☐	No	☐	Not checked ☐
4.1.3	Insulation resistance >100MΩ at 500V dc	Yes	☐	No	☐	Not tested ☐
4.1.4	External Wiring					
	Wiring checked against diagram?	Yes	☐	No	☐	
	Test block connections checked?	Yes	☐	No	☐	N/A ☐
4.1.5	Watchdog Contacts (auxiliary supply off)					
	Terminals 11 and 12 Contact closed?	Yes	☐	No	☐	
	Contact resistance		Ω	Not measured	☐	
	Terminals 13 and 14 Contact open?	Yes	☐	No	☐	
4.1.6	Measured auxiliary supply		V ac/dc*			
4.2	With the device energised					
4.2.1	Watchdog Contacts (auxiliary supply on)					
	Terminals 11 and 12 Contact open?	Yes	☐	No	☐	
	Terminals 13 and 14 Contact closed?	Yes	☐	No	☐	
	Contact resistance		Ω	Not measured	☐	
4.2.2	Date and time					
	Clock set to local time?	Yes	☐	No	☐	
	Time maintained when auxiliary supply removed?	Yes	☐	No	☐	
4.2.3	Light Emitting Diodes					
4.2.3.1	Alarm (yellow) LED working?	Yes	☐	No	☐	
	Out of service (yellow) LED working?	Yes	☐	No	☐	
4.2.3.2	Trip (red) LED working?	Yes	☐	No	☐	
4.2.3.3	All 8 programmable LED's working?	Yes	☐	No	☐	

4.2.4 Field supply voltage

Value measured between terminals 7 and 9	V dc
Value measured between terminals 8 and 10	V dc

4.2.5 Input opto-isolators

Opto input 1 working?	Yes	☐	No	☐		
Opto input 2 working?	Yes	☐	No	☐		
Opto input 3 working?	Yes	☐	No	☐		
Opto input 4 working?	Yes	☐	No	☐		
Opto input 5 working?	Yes	☐	No	☐		
Opto input 6 working?	Yes	☐	No	☐		
Opto input 7 working?	Yes	☐	No	☐		
Opto input 8 working?	Yes	☐	No	☐		
Opto input 9 working?	Yes	☐	No	☐		
Opto input 10 working?	Yes	☐	No	☐		
Opto input 11 working?	Yes	☐	No	☐		
Opto input 12 working?	Yes	☐	No	☐		
Opto input 13 working?	Yes	☐	No	☐		
Opto input 14 working?	Yes	☐	No	☐		
Opto input 15 working?	Yes	☐	No	☐		
Opto input 16 working?	Yes	☐	No	☐		
Opto input 17 working?	Yes	☐	No	☐	N/A	☐
Opto input 18 working?	Yes	☐	No	☐	N/A	☐
Opto input 19 working?	Yes	☐	No	☐	N/A	☐
Opto input 20 working?	Yes	☐	No	☐	N/A	☐
Opto input 21 working?	Yes	☐	No	☐	N/A	☐
Opto input 22 working?	Yes	☐	No	☐	N/A	☐
Opto input 23 working?	Yes	☐	No	☐	N/A	☐
Opto input 24 working?	Yes	☐	No	☐	N/A	☐
Opto input 25 working?	Yes	☐	No	☐	N/A	☐
Opto input 26 working?	Yes	☐	No	☐	N/A	☐
Opto input 27 working?	Yes	☐	No	☐	N/A	☐
Opto input 28 working?	Yes	☐	No	☐	N/A	☐
Opto input 29 working?	Yes	☐	No	☐	N/A	☐
Opto input 30 working?	Yes	☐	No	☐	N/A	☐
Opto input 31 working?	Yes	☐	No	☐	N/A	☐
Opto input 32 working?	Yes	☐	No	☐	N/A	☐
Opto input 33 working?	Yes	☐	No	☐	N/A	☐
Opto input 34 working?	Yes	☐	No	☐	N/A	☐
Opto input 35 working?	Yes	☐	No	☐	N/A	☐
Opto input 36 working?	Yes	☐	No	☐	N/A	☐
Opto input 37 working?	Yes	☐	No	☐	N/A	☐
Opto input 38 working?	Yes	☐	No	☐	N/A	☐
Opto input 39 working?	Yes	☐	No	☐	N/A	☐

Opto input 40 working?	Yes	☐	No	☐	N/A		☐
Opto input 41 working?	Yes	☐	No	☐	N/A		☐
Opto input 42 working?	Yes	☐	No	☐	N/A		☐
Opto input 43 working?	Yes	☐	No	☐	N/A		☐
Opto input 44 working?	Yes	☐	No	☐	N/A		☐
Opto input 45 working?	Yes	☐	No	☐	N/A		☐
Opto input 46 working?	Yes	☐	No	☐	N/A		☐
Opto input 47 working?	Yes	☐	No	☐	N/A		☐
Opto input 48 working?	Yes	☐	No	☐	N/A		☐
Opto input 49 working?	Yes	☐	No	☐	N/A		☐
Opto input 50 working?	Yes	☐	No	☐	N/A		☐
Opto input 51 working?	Yes	☐	No	☐	N/A		☐
Opto input 52 working?	Yes	☐	No	☐	N/A		☐
Opto input 53 working?	Yes	☐	No	☐	N/A		☐
Opto input 54 working?	Yes	☐	No	☐	N/A		☐
Opto input 55 working?	Yes	☐	No	☐	N/A		☐
Opto input 16 working?	Yes	☐	No	☐	N/A		☐
Opto input 57 working?	Yes	☐	No	☐	N/A		☐
Opto input 58 working?	Yes	☐	No	☐	N/A		☐
Opto input 59 working?	Yes	☐	No	☐	N/A		☐
Opto input 60 working?	Yes	☐	No	☐	N/A		☐
Opto input 61 working?	Yes	☐	No	☐	N/A		☐
Opto input 62 working?	Yes	☐	No	☐	N/A		☐
Opto input 63 working?	Yes	☐	No	☐	N/A		☐
Opto input 64 working?	Yes	☐	No	☐	N/A		☐

4.2.6 Output relays

Relay 1 Working?	Yes	☐	No	☐			
Contact resistance		Ω	Not measured	☐			
Relay 2 Working?	Yes	☐	No	☐			
Contact resistance		Ω	Not measured	☐			
Relay 3 Working?	Yes	☐	No	☐			
Contact resistance		Ω	Not measured	☐			
Relay 4 Working?	Yes	☐	No	☐			
Contact resistance (N/O)		Ω	Not measured	☐			
(N/C)		Ω	Not measured	☐	na	☐	
Relay 5 Working?	Yes	☐	No	☐			
Contact resistance (N/O)		Ω	Not measured	☐			
(N/C)		Ω	Not measured	☐	na	☐	
Relay 6 Working?	Yes	☐	No	☐			
Contact resistance (N/O)		Ω	Not measured	☐			
(N/C)		Ω	Not measured	☐	na	☐	
Relay 7 Working?	Yes	☐	No	☐			
Contact resistance (N/O)		Ω	Not measured	☐			
(N/C)		Ω	Not measured	☐	na	☐	

Relay 8 Working?			Yes ☐	No ☐			
Contact resistance	(N/O)		Ω	Not measured ☐			
	(N/C)		Ω	Not measured ☐	na ☐		
Relay 9 Working?			Yes ☐	No ☐			
Contact resistance			Ω	Not measured ☐			
Relay 10	Working?		Yes ☐	No ☐			
	Contact resistance		Ω	Not measured ☐			
Relay 11	Working?		Yes ☐	No ☐			
Contact resistance	(N/O)		Ω	Not measured ☐			
	(N/C)		Ω	Not measured ☐	na ☐		
Relay 12	Working?		Yes ☐	No ☐			
Contact resistance	(N/O)		Ω	Not measured ☐			
	(N/C)		Ω	Not measured ☐	na ☐		
Relay 13	Working?		Yes ☐	No ☐			
Contact resistance	(N/O)		Ω	Not measured ☐			
	(N/C)		Ω	Not measured ☐	na ☐		
Relay 14	Working?		Yes ☐	No ☐			
Contact resistance	(N/O)		Ω	Not measured ☐			
	(N/C)		Ω	Not measured ☐	na ☐		

Next output relays are only present in the models with with options A, B, D, E and F

Relay 15	Working?		Yes ☐	No ☐			
Contact resistance	(N/O)		Ω	Not measured ☐			
	(N/C)		Ω	Not measured ☐	na ☐		
Relay 16	Working?		Yes ☐	No ☐			
Contact resistance	(N/C)		Ω	Not measured ☐			
	(N/O)		Ω	Not measured ☐	na ☐		

Next output relays are only present in the models with options B, D and F

Relay 17	Working?		Ω	Not measured ☐	na ☐		
	Contact resistance		Ω	Not measured ☐			
Relay 18	Working?		Yes ☐	No ☐			
Contact resistance	(N/O)		Ω	Not measured ☐			
	(N/C)		Ω	Not measured ☐	na ☐		
Relay 19	Working?		Yes ☐	No ☐			
Contact resistance	(N/O)		Ω	Not measured ☐			
	(N/C)		Ω	Not measured ☐	na ☐		
Relay 20	Working?		Yes ☐	No ☐			
Contact resistance	(N/O)		Ω	Not measured ☐			
	(N/C)		Ω	Not measured ☐	na ☐		
Relay 21	Working?		Yes ☐	No ☐			
Contact resistance	(N/O)		Ω	Not measured ☐			
	(N/C)		Ω	Not measured ☐	na ☐		
Relay 22	Working?		Yes ☐	No ☐			
Contact resistance	(N/O)		Ω	Not measured ☐			

		(N/C)	Ω	Not measured	☐	na	☐
Relay 23	Working?		Yes ☐	No ☐			
	Contact resistance	(N/O)	Ω	Not measured	☐		
		(N/C)	Ω	Not measured	☐	na	☐
Relay 24	Working?		Yes ☐	No ☐			
	Contact resistance	(N/O)	Ω	Not measured	☐		
		(N/C)	Ω	Not measured	☐	na	☐

Next output relays are only present in the models with options D and F

Relay 25	Working?		Yes ☐	No ☐			
	Contact resistance	(N/O)	Ω	Not measured	☐		
		(N/C)	Ω	Not measured	☐	na	☐
Relay 26	Working?		Yes ☐	No ☐			
	Contact resistance	(N/O)	Ω	Not measured	☐		
		(N/C)	Ω	Not measured	☐	na	☐
Relay 27	Working?		Yes ☐	No ☐			
	Contact resistance	(N/O)	Ω	Not measured	☐		
		(N/C)	Ω	Not measured	☐	na	☐
Relay 28	Working?		Yes ☐	No ☐			
	Contact resistance	(N/O)	Ω	Not measured	☐		
		(N/C)	Ω	Not measured	☐	na	☐
Relay 29	Working?		Yes ☐	No ☐			
	Contact resistance	(N/O)	Ω	Not measured	☐		
		(N/C)	Ω	Not measured	☐	na	☐
Relay 30	Working?		Yes ☐	No ☐			
	Contact resistance	(N/O)	Ω	Not measured	☐		
		(N/C)	Ω	Not measured	☐	na	☐
Relay 31	Working?		Yes ☐	No ☐			
	Contact resistance		Ω	Not measured	☐		
Relay 32	Working?		Yes ☐	No ☐	na	☐	
	Contact resistance		Ω	Not measured	☐		
Relay 33	Working?		Yes ☐	No ☐	na	☐	
	Contact resistance		Ω	Not measured	☐		
Relay 34	Working?		Yes ☐	No ☐	na	☐	
	Contact resistance		Ω	Not measured	☐		
Relay 35	Working?		Yes ☐	No ☐			
	Contact resistance	(N/O)	Ω	Not measured	☐		
		(N/C)	Ω	Not measured	☐	na	☐
Relay 36	Working?		Yes ☐	No ☐			
	Contact resistance	(N/O)	Ω	Not measured	☐		
		(N/C)	Ω	Not measured	☐	na	☐
Relay 37	Working?		Yes ☐	No ☐			
	Contact resistance	(N/O)	Ω	Not measured	☐		
		(N/C)	Ω	Not measured	☐	na	☐
Relay 38	Working?		Yes ☐	No ☐			

	Contact resistance	(N/O)		Ω	Not measured	☐		
		(N/C)		Ω	Not measured	☐	na	☐
Relay 39	Working?		Yes	☐	No	☐		
	Contact resistance			Ω	Not measured	☐		
Relay 40	Working?		Yes	☐	No	☐		
	Contact resistance			Ω	Not measured	☐		
Relay 41	Working?		Yes	☐	No	☐		
	Contact resistance			Ω	Not measured	☐		
Relay 42	Working?		Yes	☐	No	☐		
	Contact resistance			Ω	Not measured	☐		
Relay 43	Working?		Yes	☐	No	☐		
	Contact resistance	(N/O)		Ω	Not measured	☐		
		(N/C)		Ω	Not measured	☐	na	☐
Relay 44	Working?		Yes	☐	No	☐		
	Contact resistance	(N/O)		Ω	Not measured	☐		
		(N/C)		Ω	Not measured	☐	na	☐
Relay 45	Working?		Yes	☐	No	☐		
	Contact resistance	(N/O)		Ω	Not measured	☐		
		(N/C)		Ω	Not measured	☐	na	☐
Relay 46	Working?		Yes	☐	No	☐		
	Contact resistance	(N/O)		Ω	Not measured	☐		
		(N/C)		Ω	Not measured	☐	na	☐

Next output relays are only present in the model with option D.

Relay 47	Working?		Yes	☐	No	☐		
	Contact resistance			Ω	Not measured	☐		
Relay 48	Working?		Yes	☐	No	☐		
	Contact resistance			Ω	Not measured	☐		
Relay 49	Working?		Yes	☐	No	☐		
	Contact resistance			Ω	Not measured	☐		
Relay 50	Working?		Yes	☐	No	☐		
	Contact resistance			Ω	Not measured	☐		
Relay 51	Working?		Yes	☐	No	☐		
	Contact resistance	(N/O)		Ω	Not measured	☐		
		(N/C)		Ω	Not measured	☐		
Relay 52	Working?		Yes	☐	No	☐		
	Contact resistance	(N/O)		Ω	Not measured	☐		
		(N/C)		Ω	Not measured	☐	na	☐
Relay 53	Working?		Yes	☐	No	☐		
	Contact resistance			Ω	Not measured	☐		
Relay 54	Working?		Yes	☐	No	☐		
	Contact resistance			Ω	Not measured	☐		
Relay 55	Working?		Yes	☐	No	☐		
	Contact resistance			Ω	Not measured	☐		
Relay 56	Working?		Yes	☐	No	☐		

	Contact resistance		Ω	Not measured	☐		
Relay 57	Working?		Yes ☐	No ☐			
	Contact resistance		Ω	Not measured	☐		
Relay 58	Working?		Yes ☐	No ☐			
	Contact resistance		Ω	Not measured	☐		
Relay 59	Working?		Yes ☐	No ☐			
	Contact resistance	(N/O)	Ω	Not measured	☐		
		(N/C)	Ω	Not measured	☐	na	☐
Relay 60	Working?		Yes ☐	No ☐			
	Contact resistance	(N/O)	Ω	Not measured	☐		
		(N/C)	Ω	Not measured	☐	na	☐

1.5 Engineer Details

Commissioning Engineer	Customer Witness
Date:	Date:

2 CREATING A SETTING RECORD

You often need to create a record of what settings have been applied to a device. In the past, you could have used paper printouts of all the available settings, and mark up the ones you had used. Keeping such a paper-based Settings Records can be time-consuming and prone to error (e.g. due to being settings written down incorrectly).

The MiCOM S1 Studio software lets you read from or write to MiCOM devices.

- **Extract** lets you download all the settings from a MiCOM Px40 device. A summary is given in Extract Settings from a MiCOM Px40 Device below.
- **Send** lets you send the settings you currently have open in MiCOM S1 Studio. A summary is given in Send Settings to a MiCOM Px40 Device below.

The MiCOM S1 Studio product is updated periodically. These updates provide support for new features (such as allowing you to manage new MiCOM products, as well as using new software releases and hardware suffixes). The updates may also include fixes. **Accordingly, we strongly advise customers to use the latest Schneider Electric version of MiCOM S1 Studio.**

In most cases, it will be quicker and less error prone to extract settings electronically and store them in a settings file on a memory stick. In this way, there will be a digital record which is certain to be accurate. It is also possible to archive these settings files in a repository; so they can be used again or adapted for another use.

Full details of how to do these tasks is provided in the MiCOM S1 Studio help.

A quick summary of the main steps is given below.

In each case you need to make sure that:

- Your computer includes the MiCOM S1 Studio software.
- Your computer and the MiCOM device are powered on.
- You have used a suitable cable to connect your computer to the MiCOM device (Front Port, Rear Port, Ethernet port or Modem as available).

2.1 Extract Settings from a MiCOM Px40 Device

Full details of how to do this is provided in the MiCOM S1 Studio help.

As a quick guide, you need to do the following:

1. In MiCOM S1 Studio, click the Quick Connect… button.
2. Select the relevant Device Type in the Quick Connect dialog box.
3. Click the relevant port in the Port Selection dialog box.
4. Enter the relevant connection parameters in the Connection Parameters dialog box and click the Finish button
5. MiCOM S1 Studio will try to communicate with the Px40 device. It will display a connected message if the connection attempt is successful.
6. The device will appear in the Studio Explorer pane on the top-left of the interface.
7. Click the + button to expand the options for the device, then click on the Settings folder.
8. Right-click on Settings and select the Extract Settings link to read the settings on the device and store them on your computer or a memory stick.
9. After retrieving the settings file, close the dialog box by clicking the Close button.

2.2 Send Settings to a MiCOM Px40 Device

Full details of how to do this is provided in the MiCOM S1 Studio help.

As a quick guide, you need to do the following:

1. In MiCOM S1 Studio, click the Quick Connect… button.
2. Select the relevant Device Type in the Quick Connect dialog box.
3. Click the relevant port in the Port Selection dialog box.
4. Enter the relevant connection parameters in the Connection Parameters dialog box and click the Finish button
5. MiCOM S1 Studio will try to communicate with the Px40 device. It will display a connected message if the connection attempt is successful.
6. The device will appear in the Studio Explorer pane on the top-left of the interface.
7. Click the + button to expand the options for the device, then click on the Settings folder.
8. Right-click on Settings and select the Extract Settings link to read the settings on the device and store them on your computer or a memory stick.
9. After retrieving the settings file, close the dialog box by clicking the Close button.

MAINTENANCE

CHAPTER 13

Date:	08/2014	
Products covered by this chapter:	This chapter covers the specific versions of the MiCOM products listed below. This includes ***only*** the following combinations of Software Version and Hardware Suffix.	
Hardware suffix:	All MiCOM Px4x products	
Software version:	All MiCOM Px4x products	
Connection diagrams:	P14x (P141, P142, P143, P144 & P145): 10P141/2/3/4/5xx (xx = 01 to 07) P24x (P241, P242 & P243): 10P241xx (xx = 01 to 02) 10P24201 10P24301 P341: 10P341xx (xx = 01 to 12) P34x (P342, P343, P344, P345 & P391): 10P342xx (xx = 01 to 17) 10P343xx (xx = 01 to 19) 10P344xx (xx = 01 to 12) 10P345xx (xx = 01 to 07) 10P391xx (xx = 01 to 02) P445: 10P445xx (xx = 01 to 04) P44y: 10P44303/4/5/6 (SH 01 and 03) 10P44600 10P44601/2/3 (SH 1 to 2) P54x (P543, P544, P545 & P546): 10P54302/3xx (xx = 01 to 02) 10P54400 10P54402/3xx (xx = 01 to 02) 10P54502/3xx (xx = 01 to 02) 10P54600 10P54602/3xx (xx = 01 to 02) 10P54603xx (xx = 01 to 02)	P547: 10P54702/3/4/5xx (xx = 01 to 02) P64x (P642, P643 & P645): 10P642xx (xx = 01 to 10) 10P643xx (xx = 01 to 6) 10P644xx (xx = 01 to 9) P74x 10P740xx (xx = 01 to 07) P746: 10P746xx (xx 01 to 07) P841: 10P84100 10P841012/3/4/5 (SH 1 to 2) P842: 10P842xx (xx = 01 to 02) P849: 10P849xx (xx = 01 to 06)

CONTENTS

Page (MT) 13-

Notes:

1 MAINTENANCE PERIOD

Warning **Before inspecting any wiring, performing any tests or carrying out any work on the equipment, you should be familiar with the contents of the Safety Information and Technical Data sections and the information on the equipment's rating label.**

It is recommended that products supplied by Schneider Electric receive periodic monitoring after installation. In view of the critical nature of protective and control equipment, and their infrequent operation, it is desirable to confirm that they are operating correctly at regular intervals.

Schneider Electric protection and control equipment is designed for a life in excess of 20 years.

MiCOM relays are self-supervizing and so require less maintenance than earlier designs. Most problems will result in an alarm so that remedial action can be taken. However, some periodic tests should be done to ensure that the equipment is functioning correctly and the external wiring is intact.

If the customer's organization has a preventative maintenance policy, the recommended product checks should be included in the regular program. Maintenance periods depend on many factors, such as:

- The operating environment
- The accessibility of the site
- The amount of available manpower
- The importance of the installation in the power system
- The consequences of failure

2 MAINTENANCE CHECKS

Although some functionality checks can be performed from a remote location by using the communications ability of the equipment, these are predominantly restricted to checking that the equipment, is measuring the applied currents and voltages accurately, and checking the circuit breaker maintenance counters. Therefore it is recommended that maintenance checks are performed locally (i.e. at the equipment itself).

Warning **Before carrying out any work on the equipment, you should be familiar with the contents of the Safety Information chapter/safety guide SFTY/4LM/C11 or later issue, the Technical Data chapter and the ratings on the equipment rating label.**

Warning **If a P391 is used, you should also be familiar with the ratings and warning statements in the P391 technical manual.**

2.1 Alarms

The alarm status LED should first be checked to identify if any alarm conditions exist. If so, press the read key (⊖) repeatedly to step through the alarms.

Clear the alarms to extinguish the LED.

2.2 Opto-Isolators

The opto-isolated inputs can be checked to ensure that the equipment responds to energization by repeating the commissioning test detailed in the Commissioning chapter.

2.3 Output Relays

The output relays can be checked to ensure that they operate by repeating the commissioning test detailed in the Commissioning chapter.

2.4 Measurement Accuracy

If the power system is energized, the values measured by the equipment can be compared with known system values to check that they are in the approximate range that is expected. If they are, the analog/digital conversion and calculations are being performed correctly by the relay. Suitable test methods can be found in the Commissioning chapter.

Alternatively, the values measured by the equipment can be checked against known values injected via the test block, if fitted, or injected directly into the equipment terminals. Suitable test methods can be found in the Commissioning chapter. These tests will prove the calibration accuracy is being maintained.

3 METHOD OF REPAIR

If the equipment should develop a fault whilst in service, depending on the nature of the fault, the watchdog contacts will change state and an alarm condition will be flagged. Due to the extensive use of surface-mount components, faulty Printed Circuit Boards (PCBs) should be replaced, as it is not possible to perform repairs on damaged PCBs. Therefore either the complete equipment module or just the faulty PCB (as identified by the in-built diagnostic software), can be replaced. Advice about identifying the faulty PCB can be found in the Troubleshooting chapter.

The preferred method is to replace the complete equipment module as it ensures that the internal circuitry is protected against electrostatic discharge and physical damage at all times and overcomes the possibility of incompatibility between replacement PCBs. However, it may be difficult to remove installed equipment due to limited access in the back of the cubicle and the rigidity of the scheme wiring.

Replacing PCBs can reduce transport costs but requires clean, dry conditions on site and higher skills from the person performing the repair. If the repair is not performed by an approved service center, the warranty will be invalidated.

Warning	**Before carrying out any work on the equipment, you should be familiar with the contents of the Safety Information chapter/safety guide SFTY/4LM/C11 or later issue, the Technical Data chapter and the ratings on the equipment rating label.**

This should ensure that no damage is caused by incorrect handling of the electronic components.

3.1 Replacing the Complete Equipment IED/Relay

The case and rear terminal blocks have been designed to facilitate removal of the IED/relay should replacement or repair become necessary without having to disconnect the scheme wiring.

Warning **Before working at the rear of the equipment, isolate all voltage and current supplies to the equipment.**

Note *The MiCOM range has integral current transformer shorting switches which will close when the heavy duty terminal block is removed.*

1. Disconnect the equipment's earth, IRIG-B and fiber optic connections, as appropriate, from the rear of the device.

   There are two types of terminal block used on the equipment, medium and heavy duty, which are fastened to the rear panel using crosshead screws. The P64x range also includes an RTD/CLIO terminal block option. These block types are shown in the Commissioning chapter.

Important *The use of a magnetic bladed screwdriver is recommended to minimize the risk of the screws being left in the terminal block or lost.*

2. Without exerting excessive force or damaging the scheme wiring, pull the terminal blocks away from their internal connectors.
3. Remove the screws used to fasten the equipment to the panel, rack, etc. These are the screws with the larger diameter heads that are accessible when the access covers are fitted and open.

Warning **If the top and bottom access covers have been removed, do not remove the screws with the smaller diameter heads which are accessible. These screws secure the front panel to the equipment.**

4. Withdraw the equipment carefully from the panel, rack, etc. because it will be heavy due to the internal transformers.

To reinstall the repaired or replacement equipment, follow the above instructions in reverse, ensuring that each terminal block is relocated in the correct position and the case earth, IRIG-B and fiber optic connections are replaced. To facilitate easy identification of each terminal block, they are labeled alphabetically with 'A' on the left-hand side when viewed from the rear.

Once reinstallation is complete, the equipment should be re-commissioned using the instructions in the Commissioning chapter.

3.2 Replacing a PCB

Replacing PCBs and other internal components must be undertaken only by Service Centers approved by Schneider Electric. Failure to obtain the authorization of Schneider Electric after sales engineers prior to commencing work may invalidate the product warranty.

Warning **Before removing the front panel to replace a PCB, remove the auxiliary supply and wait <u>at least 30 seconds</u> for the capacitors to discharge.**
We strongly recommend that the voltage and current transformer connections and trip circuit are isolated.

Schneider Electric support teams are available world-wide. We strongly recommend that any repairs be entrusted to those trained personnel. For this reason, details on product disassembly and re-assembly are not included here.

4 RE-CALIBRATION

Re-calibration is not required when a PCB is replaced **unless it happens to be one of the boards in the input module;** the replacement of either directly affects the calibration.

Warning	**Although it is possible to carry out re-calibration on site, this requires test equipment with suitable accuracy and a special calibration program to run on a PC. It is therefore recommended that the work be carried out by the manufacturer, or entrusted to an approved service center.**

5 CHANGING THE BATTERY

Each relay/IED has a battery to maintain status data and the correct time when the auxiliary supply voltage fails. The data maintained includes event, fault and disturbance records and the thermal state at the time of failure.

This battery will periodically need changing, although an alarm will be given as part of the relay's/IED's continuous self-monitoring in the event of a low battery condition.

If the battery-backed facilities are not required to be maintained during an interruption of the auxiliary supply, the steps below can be followed to remove the battery, but do not replace with a new battery.

Warning **Before carrying out any work on the equipment, you should be familiar with the contents of the Safety Information chapter/safety guide SFTY/4LM/C11 or later issue, the Technical Data chapter and the ratings on the equipment rating label.**

5.1 Instructions for Replacing the Battery

1. Open the bottom access cover on the front of the equipment.
2. Gently extract the battery from its socket. If necessary, use a small, insulated screwdriver to prize the battery free.
3. Ensure that the metal terminals in the battery socket are free from corrosion, grease and dust.
4. The replacement battery should be removed from its packaging and placed into the battery holder, taking care to ensure that the polarity markings on the battery agree with those adjacent to the socket.

Note *Only use a type ½AA Lithium battery with a nominal voltage of 3.6 V and safety approvals such as UL (Underwriters Laboratory), CSA (Canadian Standards Association) or VDE (Vereinigung Deutscher Elektrizitätswerke).*

5. Ensure that the battery is securely held in its socket and that the battery terminals are making good contact with the metal terminals of the socket.
6. Close the bottom access cover.

5.2 Post Modification Tests

To ensure that the replacement battery will maintain the time and status data if the auxiliary supply fails, check cell [0806: DATE and TIME, Battery Status] reads 'Healthy'. If further confirmation that the replacement battery is installed correctly is required, the commissioning test is described in the Commissioning chapter, 'Date and Time', can be performed.

5.3 Battery Disposal

The battery that has been removed should be disposed of in accordance with the disposal procedure for Lithium batteries in the country in which the equipment is installed.

6 CLEANING

Warning	**Before cleaning the equipment ensure that all ac and dc supplies, current transformer and voltage transformer connections are isolated to prevent any chance of an electric shock whilst cleaning.**

The equipment may be cleaned using a lint-free cloth moistened with clean water. The use of detergents, solvents or abrasive cleaners is not recommended as they may damage the relay's surface and leave a conductive residue.

TROUBLESHOOTING

CHAPTER 14

Date:	11/2014			
Products covered by this chapter:	This chapter covers the specific versions of the MiCOM products listed below. This includes ***only*** the following combinations of Software Version and Hardware Suffix.			
Hardware Suffix:	P14x (P141, P142, P143 & P145) P241 P242/P243 P342 P343/P344/P345 P391 P445 P44x (P441, P442 & P444) P44y (P443 & P446)	J J K J K A J J/K K	P547 P54x (P543, P544, P545 & P546) P642 P643 P645 P74x (P741, P742 & P743) P746 P841 P849	K K J/L K/M K/M J/K K K K
Software Version:	P14x (P141, P142, P143 & P145) P24x (P241, P242 & P243): P342, P343, P344, P345 & P391 P445 P44x (P441, P442 & P444) P44y (P443 & P446) P547 P54x (P543, P544, P545 & P546) P64x (P642, P643 & P645) P74x (P741, P742 & P743) P746 P841 P849	43, 44 & 46 57 36 35 & 36 C7.x, D4.x, D5.x & D6.x 55 57 45 & 55 04, A0, B1 51, A0 & B1 A0 45 & 55 A0		
Connection Diagrams:	P14x (P141, P142, P143 & P145): 10P141xx (xx = 01 to 07) 10P142xx (xx = 01 to 07) 10P143xx (xx = 01 to 07) 10P145xx (xx = 01 to 07) P24x (P241, P242 & P243): 10P241xx (xx = 01 to 02) 10P242xx (xx = 01) 10P243xx (xx = 01) P34x (P342, P343, P344, P345 & P391): 10P342xx (xx = 01 to 17) 10P343xx (xx = 01 to 19) 10P344xx (xx = 01 to 12) 10P345xx (xx = 01 to 07) 10P391xx (xx =01 to 02) P445: 10P445xx (xx = 01 to 04) P44y: 10P44303 (SH 01 and 03) 10P44304 (SH 01 and 03) 10P44305 (SH 01 and 03) 10P44306 (SH 01 and 03) 10P44600 10P44601 (SH 1 to 2) 10P44602 (SH 1 to 2) 10P44603 (SH 1 to 2)		P54x (P543, P544, P545 & P546): 10P54302 (SH 1 to 2) 10P54303 (SH 1 to 2) 10P54400 10P54404 (SH 1 to 2) 10P54405 (SH 1 to 2) 10P54502 (SH 1 to 2) 10P54503 (SH 1 to 2) 10P54600 10P54604 (SH 1 to 2) 10P54605 (SH 1 to 2) 10P54606 (SH 1 to 2) P547: 10P54702xx (xx = 01 to 02) 10P54703xx (xx = 01 to 02) 10P54704xx (xx = 01 to 02) 10P54705xx (xx = 01 to 02) P64x (P642, P643 & P645): 10P642xx (xx = 1 to 10) 10P643xx (xx = 1 to 6) 10P645xx (xx = 1 to 9) P74x 10P740xx (xx = 01 to 07) P746: 10P746xx (xx = 00 to 21) P841: 10P84100 10P84101 (SH 1 to 2) 10P84102 (SH 1 to 2) 10P84103 (SH 1 to 2) 10P84104 (SH 1 to 2) 10P84105 (SH 1 to 2) P849: 10P849xx (xx = 01 to 06)	

CONTENTS

TABLES

Notes:

1 INTRODUCTION

Warning **Before carrying out any work on the equipment, you should be familiar with the contents of the Safety Information chapter/safety guide SFTY/4LM/C11 or later issue, the Technical Data chapter and the ratings on the equipment rating label.**

The purpose of this chapter of the service manual is to allow an error condition on the relay to be identified so that appropriate corrective action can be taken.

If the relay has developed a fault, it should be possible in most cases to identify which relay module requires attention. The *Maintenance* chapter advises on the recommended method of repair where faulty modules need replacing. It is not possible to perform an on-site repair to a faulted module.

In cases where a faulty relay/module is being returned to the manufacturer or one of their approved service centers, completed copy of the Repair/Modification Return Authorization Form located at the end of this chapter should be included.

2 INITIAL PROBLEM IDENTIFICATION

Consult the following table to find the description that best matches the problem experienced, then consult the section referenced to perform a more detailed analysis of the problem.

Symptom	Refer To
Relay fails to power up	Power-Up Errors section
Relay powers up - but indicates error and halts during power-up sequence	Error Message/Code On Power-Up section
Relay Powers up but Out of Service LED is illuminated	Out of Service LED illuminated on Power Up section
Error during normal operation	Error Code During Operation section
Mal-operation of the relay during testing	Mal-Operation of the Relay during Testing section

Table 1 - Problem identification

3 POWER UP ERRORS

If the relay does not appear to power up then the following procedure can be used to determine whether the fault is in the external wiring, auxiliary fuse, power supply module of the relay or the relay front panel.

Test	Check	Action
1	Measure auxiliary voltage on terminals 1 and 2; verify voltage level and polarity against rating the label on front. Terminal 1 is –dc, 2 is +dc	If auxiliary voltage is present and correct, then proceed to test 2. Otherwise the wiring/fuses in auxiliary supply should be checked.
2	Do LEDs/and LCD backlight illuminate on power-up, also check the N/O watchdog contact for closing.	If they illuminate or the contact closes and no error code is displayed then error is probably in the main processor board (front panel). If they do not illuminate and the contact does not close then proceed to test 3.
3	Check Field voltage output (nominally 48V DC)	If field voltage is not present then the fault is probably in the relay power supply module.

Table 2 - Failure of relay to power up

4 ERROR MESSAGE/CODE ON POWER-UP

During the power-up sequence of the relay self-testing is performed as indicated by the messages displayed on the LCD. If an error is detected by the relay during these self-tests, an error message will be displayed and the power-up sequence will be halted. If the error occurs when the relay application software is executing, a maintenance record will be created and the relay will reboot.

Test	Check	Action
1	Is an error message or code permanently displayed during power up?	If relay locks up and displays an error code permanently then proceed to test 2. If the relay prompts for input by the user proceed to test 4. If the relay re-boots automatically then proceed to test 5.
2	Record displayed error, then remove and re-apply relay auxiliary supply.	Record whether the same error code is displayed when the relay is rebooted. If no error code is displayed then contact the local service center stating the error code and relay information. If the same code is displayed proceed to test 3.
3	Error code Identification Following text messages (in English) will be displayed if a fundamental problem is detected preventing the system from booting: Bus Failaddress lines SRAM Fail data lines FLASH Fail format error FLASH Fail checksum Code Verify Fail These hex error codes relate to errors detected in specific relay modules: 0c140005/0c0d0000 0c140006/0c0e0000 Last 4 digits provide details on the actual error.	These messages indicate that a problem has been detected on the main processor board of the relay (located in the front panel). Input Module (inc. Opto-isolated inputs) Output Relay Cards Other error codes relate to problems within the main processor board hardware or software. It will be necessary to contact Schneider Electric with details of the problem for a full analysis.
4	Relay displays message for corrupt settings and prompts for restoration of defaults to the affected settings.	The power up tests have detected corrupted relay settings, it is possible to restore defaults to allow the power-up to be completed. It will then be necessary to re-apply the application-specific settings.
5	Relay resets on completion of power up - record error code displayed	Error 0x0E080000, Programmable Scheme Logic (PSL) error due to excessive execution time. Restore default settings by performing a power up with ⟨ and ⟩ keys depressed, confirm restoration of defaults at prompt using (↵) key. If relay powers up successfully, check PSL for feedback paths. Other error codes will relate to software errors on the main processor board, contact Schneider Electric.

Table 3 - Power-up self-test error

5 OUT OF SERVICE LED ILLUMINATED ON POWER UP

Test	Check	Action	
1	Using the relay menu confirm whether the Commission Test/Test Mode setting is Contact Blocked. Otherwise proceed to test 2.	If the setting is Contact Blocked then disable the test mode and, verify that the Out of Service LED is extinguished.	
2	Select and view the last maintenance record from the menu (in the View Records).	Check for H/W Verify Fail this indicates a discrepancy between the relay model number and the hardware; examine the "**Maint. Data**", this indicates the causes of the failure using bit fields:	
		Bit	**Meaning**
		0	The application type field in the model number does not match the software ID
		1	The application field in the model number does not match the software ID
		2	The variant 1 field in the model number does not match the software ID
		3	The variant 2 field in the model number does not match the software ID
		4	The protocol field in the model number does not match the software ID
		5	The language field in the model number does not match the software ID
		6	The VT type field in the model number is incorrect (110V VTs fitted)
		7	The VT type field in the model number is incorrect (440V VTs fitted)
		8	The VT type field in the model number is incorrect (no VTs fitted)

Table 4 - Out of service LED illuminated

6 ERROR CODE DURING OPERATION

The relay performs continuous self-checking, if an error is detected then an error message will be displayed, a maintenance record will be logged and the relay will reset (after a 1.6 second delay). A permanent problem (for example due to a hardware fault) will generally be detected on the power up sequence, following which the relay will display an error code and halt. If the problem was transient in nature then the relay should reboot correctly and continue in operation. The nature of the detected fault can be determined by examination of the maintenance record logged.

There are also two cases where a maintenance record will be logged due to a detected error where the relay will not reset. These are detection of a failure of either the field voltage or the lithium battery, in these cases the failure is indicated by an alarm message, however the relay will continue to operate.

If the field voltage is detected to have failed (the voltage level has dropped below threshold), then a scheme logic signal is also set. This allows the scheme logic to be adapted in the case of this failure (for example if a blocking scheme is being used).

In the case of a battery failure it is possible to prevent the relay from issuing an alarm using the setting under the Date and Time section of the menu. This setting '**Battery Alarm**' can be set to '**Disabled**' to allow the relay to be used without a battery, without an alarm message being displayed.

In the case of an RTD board failure, an alarm "RTD board fail" message is displayed, the RTD protection is disabled, but the operation of the rest of the relay functionality is unaffected.

7 MAL-OPERATION OF THE RELAY DURING TESTING

7.1 Failure of Output Contacts

An apparent failure of the relay output contacts may be caused by the relay configuration; the following tests should be performed to identify the real cause of the failure.

Note	*The relay self-tests verify that the coil of the contact has been energized, an error will be displayed if there is a fault in the output relay board.*

Test	Check	Action
1	Is the Out of Service LED illuminated?	Illumination of this LED may indicate that the relay is Contact Blocked or that the protection has been disabled due to a hardware verify error (see the *Out of service LED illuminated* table..
2	Examine the Contact status in the Commissioning section of the menu.	If the relevant bits of the contact status are operated, proceed to test 4, if not proceed to test 3.
3	Verify by examination of the fault record or by using the test port whether the protection element is operating correctly.	If the protection element does not operate verify whether the test is being correctly applied. If the protection element does operate, it will be necessary to check the PSL to ensure that the mapping of the protection element to the contacts is correct.
4	Using the Commissioning/Test mode function apply a test pattern to the relevant relay output contacts and verify whether they operate (note the correct external connection diagram should be consulted). A continuity tester can be used at the rear of the relay for this purpose.	If the output relay does operate, the problem must be in the external wiring to the relay. If the output relay does not operate this could indicate a failure of the output relay contacts (note that the self-tests verify that the relay coil is being energized). Ensure that the closed resistance is not too high for the continuity tester to detect.

Table 5 - Failure of output contacts

7.2 Failure of Opto-Isolated Inputs

The opto-isolated inputs are mapped onto the relay internal signals using the PSL. If an input does not appear to be recognized by the relay scheme logic the Commission Tests/Opto Status menu option can be used to verify whether the problem is in the opto-isolated input itself or the mapping of its signal to the scheme logic functions. If the opto-isolated input does appear to be read correctly then it will be necessary to examine its mapping within the PSL.

Ensure the voltage rating for the opto inputs has been configured correctly with applied voltage. If the opto-isolated input state is not being correctly read by the relay the applied signal should be tested. Verify the connections to the opto-isolated input using the correct wiring diagram and the correct nominal voltage settings in any standard or custom menu settings. Next, using a voltmeter verify that 80% opto setting voltage is present on the terminals of the opto-isolated input in the energized state. If the signal is being correctly applied to the relay then the failure may be on the input card itself. Depending on which opto-isolated input has failed this may require replacement of either the complete analog input module (the board within this module cannot be individually replaced without re-calibration of the relay) or a separate opto board.

7.3 Incorrect Analog Signals

The measurements may be configured in primary or secondary to assist. If it is suspected that the analog quantities being measured by the relay are not correct then the measurement function of the relay can be used to verify the nature of the problem. The measured values displayed by the relay should be compared with the actual magnitudes at the relay terminals. Verify that the correct terminals are being used (in particular the dual rated CT inputs) and that the CT and VT ratios set on the relay are correct. The correct 120 degree displacement of the phase measurements should be used to confirm that the inputs have been correctly connected.

7.4 PSL Editor Troubleshooting

A failure to open a connection could be because of one or more of the following:

- The relay address is not valid (note: this address is always 1 for the front port).
- Password is not valid
- Communication Set-up - COM port, Baud rate, or Framing - is not correct
- Transaction values are not suitable for the relay and/or the type of connection
- Modem configuration is not valid. Changes may be necessary when using a modem
- The connection cable is not wired correctly or broken. See MiCOM S1 connection configurations
- The option switches on any KITZ101/102 that is in use may be incorrectly set

7.4.1 Diagram Reconstruction after Recover from Relay

Although the extraction of a scheme from a relay is supported, the facility is provided as a way of recovering a scheme in the event that the original file is unobtainable.

The recovered scheme will be logically correct, but much of the original graphical information is lost. Many signals will be drawn in a vertical line down the left side of the canvas. Links are drawn orthogonally using the shortest path from A to B.

Any annotation added to the original diagram (titles, notes, etc.) are lost.

Sometimes a gate type may not be what was expected, e.g. a 1-input AND gate in the original scheme will appear as an OR gate when uploaded. Programmable gates with an inputs-to-trigger value of 1 will also appear as OR gates.

7.4.2 PSL Version Check

The PSL is saved with a version reference, time stamp and CRC check. This gives a visual check whether the default PSL is in place or whether a new application has been downloaded.

8 REPAIR AND MODIFICATION PROCEDURE

Please follow these steps to return an Automation product to us:

1. Get the Repair and Modification Authorization Form (RMA).

   A copy of the RMA form is shown at the end of this section.

2. Fill in the RMA form.

   Fill in only the white part of the form.

   Please ensure that all fields marked **(M)** are completed such as:

   - Equipment model
   - Model No. and Serial No.
   - Description of failure or modification required (please be specific)
   - Value for customs (in case the product requires export)
   - Delivery and invoice addresses
   - Contact details

3. Receive from local service contact, the information required to ship the product.

   Your local service contact will provide you with all the information:

   - Pricing details
   - RMA No
   - Repair center address

   If required, an acceptance of the quote must be delivered before going to next stage.

4. Send the product to the repair center.

   Address the shipment to the repair center specified by your local contact.

   Ensure all items are protected by appropriate packaging: anti-static bag and foam protection.

   Ensure a copy of the import invoice is attached with the unit being returned.

   Ensure a copy of the RMA form is attached with the unit being returned.

   E-mail or fax a copy of the import invoice and airway bill document to your local contact.

Notes:

REPAIR/MODIFICATION RETURN AUTHORIZATION FORM

FIELDS IN GREY TO BE FILLED IN BY SCHNEIDER ELECTRIC PERSONNEL ONLY

Reference **RMA:**		Date:
Repair Center Address (for shipping)	**Service Type** ☐ Retrofit ☐ Warranty ☐ Paid service ☐ Under repair contract ☐ Wrong supply	LSC PO No.:
Schneider Electric - Local Contact Details Name: Telephone No.: Fax No.: E-mail:		

IDENTIFICATION OF UNIT

Fields marked (M) are mandatory, delays in return will occur if not completed.

Model No./Part No.: **(M)**	Site Name/Project:
Manufacturer Reference: **(M)**	Commissioning Date:
Serial No.: **(M)**	Under Warranty: ☐ Yes ☐ No
Software Version:	Additional Information:
Quantity:	Customer P.O (if paid):

FAULT INFORMATION

Type of Failure		**Found Defective**	
Hardware fail	☐	During FAT/inspection	☐
Mechanical fail/visible defect	☐	On receipt	☐
Software fail	☐	During installation/commissioning	☐
Other:		During operation	☐
		Other:	
Fault Reproducibility			
Fault persists after removing, checking on test bench	☐		
Fault persists after re-energization	☐		
Intermittent fault	☐		

Description of Failure Observed or Modification Required - *Please be specific* **(M)**

FOR REPAIRS ONLY

Would you like us to install an updated firmware version after repair?	☐ Yes	☐ No

CUSTOMS & INVOICING INFORMATION

Required to allow return of repaired items

Value for Customs (M)	
Customer Invoice Address ((M) if paid)	**Customer Return Delivery Address (full street address) (M)** Part shipment accepted ☐ Yes ☐ No **OR** Full shipment required ☐ Yes ☐ No
Contact Name: Telephone No.: Fax No.: E-mail:	Contact Name: Telephone No.: Fax No.: E-mail:

REPAIR TERMS

1. **Please ensure that a copy of the import invoice is attached with the returned unit, together with the airway bill document.** Please fax/e-mail a copy of the appropriate documentation **(M)**.
2. Please ensure the Purchase Order is released, for paid service, to allow the unit to be shipped.
3. Submission of equipment to Schneider Electric is deemed as authorization to repair and acceptance of quote.
4. Please ensure all items returned are marked as Returned for 'Repair/Modification' and **protected by appropriate packaging** (anti-static bag for each board and foam protection).

SCADA COMMUNICATIONS

CHAPTER 15

Date:	08/2015
Products covered by this chapter:	This chapter covers the specific versions of the MiCOM products listed below. This includes ***only*** the following combinations of Software Version and Hardware Suffix.
Hardware Suffix:	M
Software Version:	D0
Connection Diagrams:	10P849xx (xx = 01 to 06)

CONTENTS

FIGURES

TABLES

1 INTRODUCTION

This chapter describes the remote interfaces of the MiCOM relay in enough detail to allow integration in a substation communication network. The relay supports a choice of one of a number of protocols through the rear 2-wire EIA(RS)485 communication interface, selected using the model number when ordering. This is in addition to the front serial interface and second rear communications port, which supports the Courier protocol only. According to the protocol and hardware options selected, the interface may alternatively be presented over an optical fiber interface, or via an Ethernet connection.

The supported protocols include:

- Courier
- IEC-60870-5-103
- DNP3.0
- MODBUS
- IEC 61850 Ethernet Interface

Table 1 – Supported protocols

The implementation of both Courier and IEC 60870-5-103 on RP1 can also, optionally, be presented over fiber as well as EIA(RS)485.

The DNP3.0 implementation is available via the EIA(RS)485 port.

The rear EIA(RS)-485 interface is isolated and is suitable for permanent connection whichever protocol is selected. The advantage of this type of connection is that up to 32 relays can be daisy-chained together using a simple twisted-pair electrical connection.

Note	*The second rear Courier port and the fiber optic interface are mutually exclusive as they occupy the same physical slot.*

An outline of the connection details for each of the communications ports is provided here. The ports are configurable using settings - a description of the configuration follows the connections part. Details of the protocol characteristics are also shown.

For each of the protocol options, the supported functions and commands are listed with the database definition. The operation of standard procedures such as extraction of event, fault and disturbance records, or setting changes is also described.

The descriptions in this chapter do not aim to fully describe the protocol in detail. Refer to the relevant documentation protocol for this information. This chapter describes the specific implementation of the protocol in the relay.

2 CONNECTIONS TO THE COMMUNICATIONS PORTS

2.1 Rear Communication Port - EIA(RS)-485

The rear EIA(RS)-485 communication port is provided by a 3-terminal screw connector on the back of the relay. See the Connection Diagrams chapter for details of the connection terminals. The rear port provides K-Bus/EIA(RS)-485 serial data communication and is intended for use with a permanently-wired connection to a remote control center. Of the three connections, two are for the signal connection, and the other is for the earth shield of the cable.

If the IEC60870-5-103, or the DNP3.0 protocols are specified as the interface for the rear port, then connections conform entirely to the EIA(RS)485 standards outline below. If, however, the Courier protocol is specified as the rear port protocol, the interface can be set either to EIA(RS)485 or K-Bus. The configuration of the port as either EIA(RS)485 or K-Bus is described later together with K-Bus details, but as connection to the port is affected by this choice, you should note these points:

- Connection to an EIA(RS)485 device is polarity sensitive, whereas K-Bus connection is not. In all other respects (bus wiring, topology, connection, biasing, and termination) K-Bus can be considered the same as EIA(RS)485.
- Whilst connection to or between an EIA(RS)485 port and an EIA(RS)232 port on a PC can be implemented using a general purpose EIA(RS)485 to EIA(RS)232 converter. However, connection between an EIA(RS)232 port and K-Bus requires a KITZ101, KITZ102 or KITZ201.

The protocol provided by the relay is indicated in the relay menu in the **Communications** column. Using the keypad and LCD, first check that the **Comms. settings** cell in the **Configuration** column is set to **Visible**, then move to the **Communications** column. The first cell down the column shows the communication protocol that is being used by the rear port.

Note	*Unless the K-Bus option is chosen for the rear port, correct polarity must be observed for the signal connections. In all other respects (bus wiring, topology, connection, biasing and termination) K-Bus can be considered the same as EIA(RS)485.*

2.2 EIA(RS)-485 Bus

The EIA(RS)-485 two-wire connection provides a half-duplex fully isolated serial connection to the product. The connection is polarized and while the product's connection diagrams show the polarization of the connection terminals, there is no agreed definition of which terminal is which. If the master is unable to communicate with the product and the communication parameters match, make sure the two-wire connection is not reversed.

EIA(RS)-485 provides the capability to connect multiple devices to the same two-wire bus. MODBUS is a master-slave protocol, so one device is the master, and the remaining devices are slaves. It is not possible to connect two masters to the same bus, unless they negotiate bus access.

2.2.1 EIA(RS)-485 Bus Termination

The EIA(RS)-485 bus must have 120 Ω (Ohm) ½ Watt terminating resistors fitted at either end across the signal wires, see the *EIA(RS)-485 bus connection arrangements* diagram below. Some devices may be able to provide the bus terminating resistors by different connection or configuration arrangements, in which case separate external components are not needed. However, this product does not provide such a facility, so if it is located at the bus terminus, an external termination resistor is needed.

2.2.2 EIA(RS)-485 Bus Connections & Topologies

The EIA(RS)-485 standard requires each device to be directly connected to the physical cable that is the communications bus. Stubs and tees are expressly forbidden, as are star topologies. Loop bus topologies are not part of the EIA(RS)-485 standard and are forbidden by it.

Two-core screened cable is recommended. The specification of the cable depends on the application, although a multi-strand 0.5 mm^2 per core is normally adequate. Total cable length must not exceed 1000 m. The screen must be continuous and connected at one end, normally at the master connection point. It is important to avoid circulating currents, especially when the cable runs between buildings, for both safety and noise reasons.

This product does not provide a signal ground connection. If the bus cable has a signal ground connection, it must be ignored. However, the signal ground must have continuity for the benefit of other devices connected to the bus. For both safety and noise reasons, the signal ground must never be connected to the cable's screen or to the product's chassis.

2.2.3 EIA(RS)-485 Biasing

It may also be necessary to bias the signal wires to prevent jabber. Jabber occurs when the signal level has an indeterminate state because the bus is not being actively driven. This can occur when all the slaves are in receive mode and the master is slow to switch from receive mode to transmit mode. This may be because the master purposefully waits in receive mode, or even in a high impedance state, until it has something to transmit. Jabber causes the receiving device(s) to miss the first bits of the first character in the packet, which results in the slave rejecting the message and consequentially not responding. Symptoms of this are poor response times (due to retries), increasing message error counters, erratic communications, and even a complete failure to communicate.

Biasing requires that the signal lines are weakly pulled to a defined voltage level of about 1 V. There should only be one bias point on the bus, which is best situated at the master connection point. The DC source used for the bias must be clean, otherwise noise is injected. Some devices may (optionally) be able to provide the bus bias, in which case external components are not required.

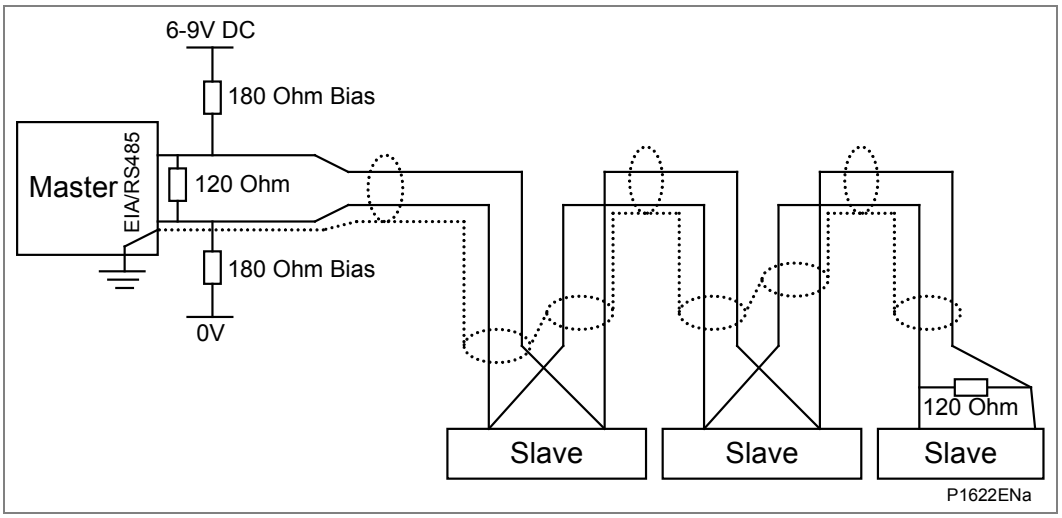

Figure 1 - EIA(RS)-485 bus connection arrangements

It is possible to use the product's field voltage output (48 V DC) to bias the bus using values of 2.2 k Ω (½W) as bias resistors instead of the 180 Ω resistors shown in the above *EIA(RS)-485 bus connection arrangements* diagram. Note the following warnings apply:

Warnings	**It is extremely important that the 120 Ω termination resistors are fitted. Otherwise the bias voltage may be excessive and may damage the devices connected to the bus.** **As the field voltage is much higher than that required, Schneider Electric cannot assume responsibility for any damage that may occur to a device connected to the network as a result of incorrect application of this voltage.** **Ensure the field voltage is not used for other purposes, such as powering logic inputs, because noise may be passed to the communication network.**

2.2.4 Courier Communication

Courier is the communication language developed to allow remote interrogation of its range of protection relays. Courier uses a master and slave. EIA(RS)-232 on the front panel allows only one slave but EIA(RS)-485 on the back panel allows up to 32 daisy-chained slaves. Each slave unit has a database of information and responds with information from its database when requested by the master unit.

The relay is a slave unit that is designed to be used with a Courier master unit such as MiCOM S1 Studio, MiCOM S10, PAS&T or a SCADA system. MiCOM S1 Studio is compatible is specifically designed for setting changes with the relay.

To use the rear port to communicate with a PC-based master station using Courier, a KITZ K-Bus to EIA(RS)-232 protocol converter is needed. This unit (and information on how to use it) is available from Schneider Electric. A typical connection arrangement is shown in the *K-bus remote communication connection arrangements* diagram below. For more detailed information on other possible connection arrangements, refer to the manual for the Courier master station software and the manual for the KITZ protocol converter. Each spur of the K-Bus twisted pair wiring can be up to 1000 m in length and have up to 32 relays connected to it.

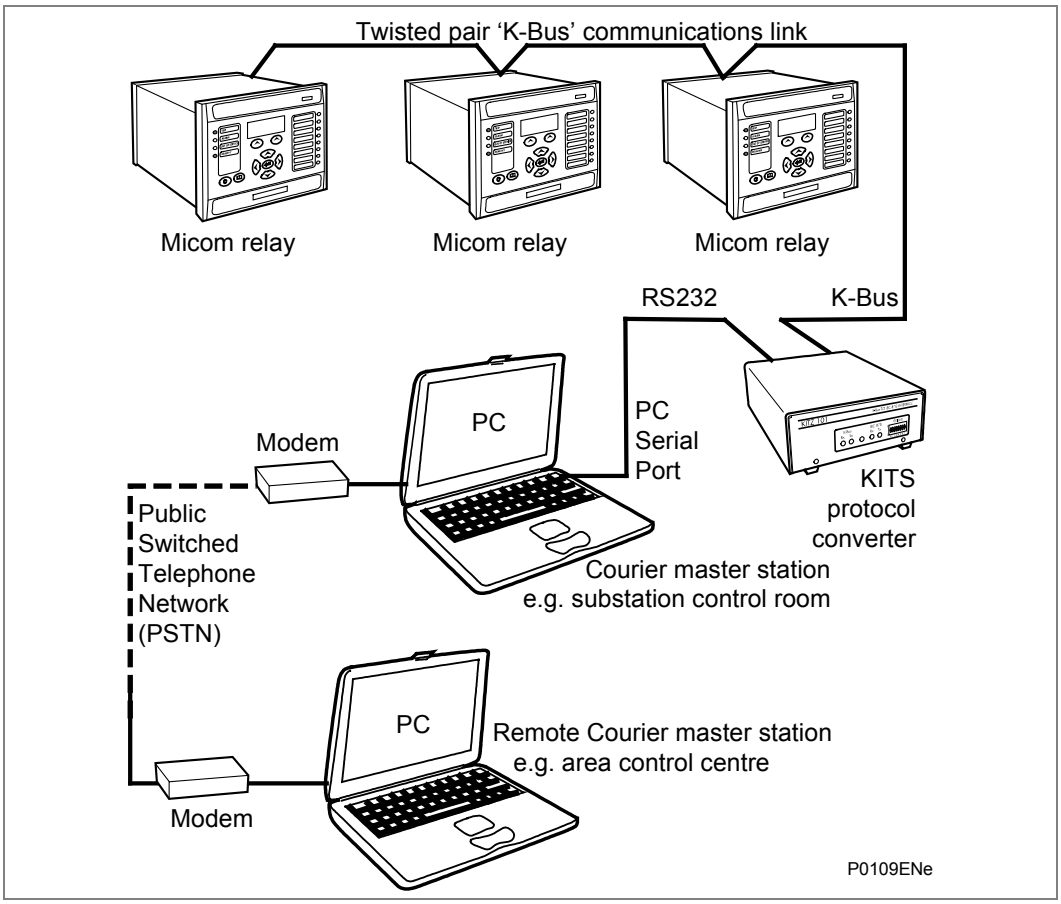

Figure 2 – K-bus remote communication connection arrangements

3 CONFIGURING THE COMMUNICATIONS PORTS

3.1 Configuring the First Rear Courier Port (RP1)

Once the physical connection is made to the relay, configure the relay's communication settings using the keypad and LCD user interface.

1. In the relay menu, select the **Configuration** column, then check that the **Comms. settings** cell is set to **Visible**.
2. Select the **Communications** column. Only two settings apply to the rear port using Courier, the relay's address and the inactivity timer. Synchronous communication uses a fixed baud rate of 64 kbits/s.
3. Move down the **Communications** column from the column heading to the first cell down. This shows the communication protocol.

```
Protocol
Courier
```

4. The next cell down the column controls the address of the relay. As up to 32 relays can be connected to one K-Bus spur (see Figure 2), each relay must have a unique address so messages from the master control station are accepted by one relay only. Courier uses an integer (from 0 to 254) for the relay address that is set with this cell. Important: no two relays should have the same Courier address. The master station uses the Courier address to communicate with the relay.

```
RP1 Address
255
```

5. The next cell down controls the inactivity timer.

```
RP1 Inactiv timer
15 mins.
```

The inactivity timer controls how long the relay waits without receiving any messages on the rear port before it reverts to its default state, including revoking any password access that was enabled. For the rear port this can be set between 1 and 30 minutes.

The next cell down controls the physical media used for the communication.

```
RP1 Physical link
Copper
```

The default setting is to select the copper electrical EIA(RS)-485 connection. If the optional fiber optic connectors are fitted to the relay, this setting can be changed to **Fiber optic**. This cell is also invisible if a second rear comms. port is fitted because it is mutually exclusive to the fiber optic connectors.

6. As an alternative to running Courier over K-Bus, Courier over EIA(RS)-485 can be selected. The next cell down indicates the status of the hardware.

```
RP1 Card status
EIA(RS)-232 OK
```

7. The next cell allows you to configure the port for EIA(RS)-485 or K-Bus.

```
RP1 Port config.
EIA(RS)-232
```

8. If using EIA(RS)-485, the next cell selects the communication mode. The choice is either IEC60870 FT1.2 for normal operation with 11-bit modems, or 10-bit no parity.

```
RP1 Comms. Mode
IEC60870 FT1.2
```

9. If using EIA(RS)-485, the next cell down controls the baud rate. For K-Bus the baud rate is fixed at 64 kbits/second between the relay and the KITZ interface at the end of the relay spur. Courier communications is asynchronous. Three baud rates are supported by the relay, 9600 bits/s, 19200 bits/s and 38400 bits/s.

```
RP1 Baud rate
19200
```

Note	*For K-Bus, the baud rate is fixed at 64kbit/second between the relay and the KITZ interface at the end of the relay spur. Courier communications is asynchronous.*

Important	**If you modify protection and disturbance recorder settings using an on-line editor such as PAS&T, you must confirm them. To do this, from the Configuration column select the Save changes cell. Off-line editors such as MiCOM S1 Studio do not need this action for the setting changes to take effect.**

3.2 Configuring the MODBUS Communication

Important	**MODBUS is not available for all MiCOM products. MODBUS availability is shown in the *Supported Protocols* table.**

MODBUS is a master/slave communication protocol that can be used for network control. In a similar way to Courier, the master device initiates all actions and the slave devices (the relays) respond to the master by supplying the requested data or by taking the requested action. MODBUS communication uses a twisted pair connection to the rear port and can be used over a distance of 1000 m with up to 32 slave devices.

To use the rear port with MODBUS communication, configure the relay's communication settings using the keypad and LCD user interface.

1. In the relay menu, select the **Configuration** column, then check that the **Comms. settings** cell is set to **Visible**.
2. Select the **Communications** column. Four settings apply to the rear port using MODBUS that are described below. Move down the **Communications** column from the column heading to the first cell down. This shows the communication protocol.

```
Protocol
MODBUS
```

3. The next cell down controls the MODBUS address of the relay.

```
RP1 MODBUS address
23
```

Up to 32 relays can be connected to one MODBUS spur, therefore it is necessary for each relay to have a unique address so that messages from the master control station are accepted by one relay only. MODBUS uses an integer between 1 and 247 for the relay address. It is important that no two relays have the same

MODBUS address. The MODBUS address is then used by the master station to communicate with the relay.

4. The next cell down controls the inactivity timer.

```
RP1 Inactiv timer
10.00 mins.
```

The inactivity timer controls how long the relay waits without receiving any messages on the rear port before it reverts to its default state, including revoking any password access that was enabled. For the rear port this can be set between 1 and 30 minutes.

5. The next cell down the column controls the baud rate to be used.

```
RP1 Baud rate
19200 bits/s
```

MODBUS communication is asynchronous. Three baud rates are supported by the relay, 9600 bits/s, 19200 bits/s and 38400 bits/s. It is important that whatever baud rate is selected on the relay is the same as that set on the MODBUS master station.

6. The next cell down controls the parity format used in the data frames.

```
Parity
None
```

The parity can be set to be one of **None**, **Odd** or **Even**. It is important that whatever parity format is selected on the relay is the same as that set on the MODBUS master station.

Note	*The 'Parity' cell is used to determine how the parity bit will be set in each character. If either Even or Odd Parity is specified, the quantity of '1' bits will be counted in the data portion of each character. The parity bit will then be set to a 0 or 1 to result in an Even or Odd total of 1 bits. When the message is transmitted, the parity bit is calculated and applied to the frame of each character. The device that receives counts the quantity of 1 bits and sets an error if they are not the same as configured for that device.*

7. The next cell down controls the physical media used for the communication.

```
RP1 Physical link
Copper
```

The default setting is to select the copper electrical EIA(RS)-485 connection. If the optional fiber optic connectors are fitted to the relay, this setting can be changed to **Fiber optic**. This cell is also invisible if a second rear comms. port is fitted because it is mutually exclusive to the fiber optic connectors.

8. The next cell down controls the format of the Date/Time (software 30 or later).

```
MODBUS IEC Time
Standard IEC
```

The format can be selected as either **Standard** (as for IEC60870-5-4 'Binary Time 2a') which is the default, or to **Reverse** for compatibility with MICOM Px20 and Px30 product ranges. For more information see the *Date and Time Format* section.

3.3 Configuring the IEC 60870-5 CS 103 Rear Port, RP1

The IEC specification IEC 60870-5-103: Telecontrol Equipment and Systems, Part 5: Transmission Protocols Section 103 defines the use of standards IEC 60870-5-1 to IEC 60870-5-5 to perform communication with protection equipment. The standard configuration for the IEC 60870-5-103 protocol is to use a twisted pair connection over distances up to 1000 m. As an option for IEC 60870-5-103, the rear port can be specified to use a fiber optic connection for direct connection to a master station. The relay operates as a slave in the system, responding to commands from a master station. The method of communication uses standardized messages which are based on the VDEW communication protocol.

To use the rear port with IEC 60870-5-103 communication, configure the relay's communication settings using the keypad and LCD user interface.

1. In the relay menu, select the **Configuration** column, then check that the **Comms. settings** cell is set to **Visible**.
2. Select the **Communications** column. Four settings apply to the rear port using IEC 60870-5-103 that are described below.

   Move down the **Communications** column from the column heading to the first cell down. This shows the communication protocol.

   ```
   RP1 Protocol
   IEC 60870-5-103
   ```

3. The next cell down controls the IEC 60870-5-103 address of the relay.

   ```
   RP1 address
   162
   ```

   Up to 32 relays can be connected to one IEC 60870-5-103 spur, therefore it is necessary for each relay to have a unique address so that messages from the master control station are accepted by one relay only. IEC 60870-5-103 uses an integer number between 0 and 254 for the relay address. It is important that no two relays have the same IEC 60870-5-103 address. For products such as the P74x – P741, P742 P743, you may need to use a star coupler if you are using more than 8 units. The IEC 60870-5-103 address is then used by the master station to communicate with the relay.

4. The next cell down the column controls the baud rate to be used.

   ```
   RP1 Baud rate
   9600 bits/s
   ```

   IEC 60870-5-103 communication is asynchronous. Two baud rates are supported by the relay, '9600 bits/s' and '19200 bits/s'. It is important that whatever baud rate is selected on the relay is the same as that set on the IEC 60870-5-103 master station.

5. The next cell down controls the period between IEC 60870-5-103 measurements.

   ```
   RP1 Meas. Period
   30.00 s
   ```

   The IEC 60870-5-103 protocol allows the relay to supply measurements at regular intervals. The interval between measurements is controlled by this cell, and can be set between 1 and 60 seconds.

6. The following cell is not currently used but is available for future expansion.

   ```
   RP1 Inactiv timer
   ```

7. The next cell down the column controls the physical media used for communication.

```
RP1 Physical link
Copper
```

The default setting is to select the copper electrical EIA(RS)-485 connection. If the optional fiber optic connectors are fitted to the relay, this setting can be changed to **Fiber optic**. This cell is also invisible if a second rear comms. port is fitted because it is mutually exclusive to the fiber optic connectors.

8. The next cell down can be used for monitor or command blocking.

```
RP1 CS103 Blcking
```

There are three settings associated with this cell; these are:

- Disabled

  No blocking selected.

- Monitor Blocking

  When the monitor blocking DDB Signal is active high, either by energizing an opto input or control input, reading of the status information and disturbance records is not permitted. When in this mode the relay returns a “Termination of general interrogation” message to the master station.

- Command Blocking

  When the command blocking DDB signal is active high, either by energizing an opto input or control input, all remote commands are ignored, such as CB Trip/Close or change setting group. When in this mode the relay returns a **negative acknowledgement of command** message to the master station.

3.4 Configuring the DNP3.0 Rear Port, RP1 and Optional DNP3.0 over Ethernet

Important	**DNP3.0 is not available for all MiCOM products. DNP3.0 availability is shown in the Supported Protocols table.**

The DNP3.0 protocol is defined and administered by the DNP User Group. Information about the user group, DNP3.0 in general and protocol specifications can be found on their website: www.dnp.org

The DNP3.0 implementation in the MiCOM P841 can be presented on an EIA(RS)485 physical layer, and/or on an Ethernet connection according to the options selected.

The relay operates as a DNP3.0 slave and supports subset Level 2 of the protocol plus some of the features from Level 3.

The settings applicable to the EIA(RS)485 implementation are described in section 3.5.

The settings applicable to the Ethernet implementation are described in section 5 - MODBUS Interface.

3.5 Configuring the DNP3.0 Communication Rear Port, RP1

Important	**DNP3.0 is not available for all MiCOM products. DNP3.0 availability is shown in the Supported Protocols table.**

The DNP3.0 protocol is defined and administered by the DNP User Group. Information about the user group, DNP3.0 in general and protocol specifications can be found on their website: www.dnp.org

The relay operates as a DNP3.0 slave and supports subset level 2 of the protocol plus some of the features from level 3. DNP3.0 communication is achieved using a twisted pair connection to the rear port and can be used over a distance of 1000 m with up to 32 slave devices.

1. To use the rear port with DNP3.0 communication, configure the relay's communication settings using the keypad and LCD user interface.
2. In the relay menu, select the **Configuration** column, then check that the **Comms. settings** cell is set to **Visible**.
3. Four settings apply to the rear port using IEC 60870-5-103 that are described below.
4. Move down the **Communications** column from the column heading to the first cell down. This shows the communication protocol.

```
RP1 Protocol
DNP3.0
```

5. The next cell controls the DNP3.0 address of the relay.

```
RP1 Address
232
```

Up to 32 relays can be connected to one DNP3.0 spur, therefore it is necessary for each relay to have a unique address so that messages from the master control station are accepted by only one relay. DNP3.0 uses a decimal number between 1 and 65519 for the relay address. It is important that no two relays have the same DNP3.0 address. The DNP3.0 address is then used by the master station to communicate with the relay.

6. The next cell down the column controls the baud rate to be used.

```
RP1 Baud rate
9600 bits/s
```

DNP3.0 communication is asynchronous. Six baud rates are supported by the relay 1200bits/s, 2400bits/s, 4800bits/s, 9600bits/s, 19200bits/s and 38400bits/s. It is important that whatever baud rate is selected on the relay is the same as that set on the DNP3.0 master station.

7. The next cell down the column controls the parity format used in the data frames.

```
RP1 Parity
None
```

The parity can be set to be one of **None**, **Odd** or **Even.** It is important that whatever parity format is selected on the relay is the same as that set on the DNP3.0 master station.

8. The next cell down the column controls the physical media used for the communication.

```
RP1 Physical link
Copper
```

The default setting is to select the copper electrical EIA(RS)-485 connection. If the optional fiber optic connectors are fitted to the relay, this setting can be changed to **Fiber optic**. This cell is also invisible if a second rear comms. port is fitted because it is mutually exclusive to the fiber optic connectors.

9. The next cell down the column sets the time synchronization request from the master by the relay.

```
RP1 Time sync.
Enabled
```

The time sync. can be set to either enabled or disabled. If enabled it allows the DNP3.0 master to synchronize the time.

3.6 Configuring the Second Rear Communication Port SK4 (where fitted)

For relays with Courier, MODBUS, IEC60870-5-103 or DNP3.0 protocol on the first rear communications port there is the hardware option of a second rear communications port, which runs the Courier language. This can be used over one of three physical links: twisted pair K-Bus (non-polarity sensitive), twisted pair EIA(RS)-485 (connection polarity sensitive) or EIA(RS)-232.

The settings for this port are immediately below those for the first port. See the *Connection Diagrams* chapter.

1. Move down the settings until the following sub heading is displayed.

```
Rear Port2 (RP2)
```

2. The next cell down indicates the language, which is fixed at Courier for RP2.

```
RP2 Protocol
Courier
```

3. The next cell down indicates the status of the hardware.

```
RP2 Card status
EIA(RS)-232 OK
```

4. The next cell allows port to be configured for EIA(RS)-232, EIA(RS)-485 or K-Bus.

```
RP2 Port config.
EIA(RS)-232
```

5. For EIA(RS)-232 and EIA(RS)-485, the next cell selects the communication mode.

   The choice is either IEC60870 FT1.2 for normal operation with 11-bit modems, or 10-bit no parity.

```
RP2 Comms. Mode
IEC60870 FT1.2
```

6. The next cell down controls the comms. port address.

```
RP2 Address
255
```

Since up to 32 relays can be connected to one K-Bus spur, as indicated in Figure 2 each relay must have a unique address so that messages from the master control station are accepted by one relay only. Courier uses an integer between 0 and 254

for the relay address that is set with this cell. It is important that no two relays have the same Courier address. The Courier address is then used by the master station to communicate with the relay.

7. The next cell down controls the inactivity timer.

```
RP2 Inactivity timer
15 mins.
```

The inactivity timer controls how long the relay waits without receiving any messages on the rear port before it reverts to its default state, including revoking any password access that was enabled. For the rear port this can be set between 1 and 30 minutes.

8. For EIA(RS)-232 and EIA(RS)-485, the next cell down controls the baud rate.

For K-Bus the baud rate is fixed at 64 kbit/second between the relay and the KITZ interface at the end of the relay spur.

```
RP2 Baud rate
19200
```

Courier communications is asynchronous. Three baud rates are supported by the relay, 9600 bits/s, 19200 bits/s and 38400 bits/s.

3.7 Configuring the Ethernet Communication (option)

It is possible to communicate through an Ethernet network using a Schneider Electric I4XS4UE (refer to Px4x/EN REB user guide for Redundant Ethernet board connections).

Connection for Ethernet communication can be made either by standard RJ45 electrical connections or by multi-mode optical fibers suitable for 1310 nm transmission and terminated with BFOC/2.5 (ST) connectors.

For the P746 or P849 product, it is also possible to use the IEC 61850-8.1 protocol.

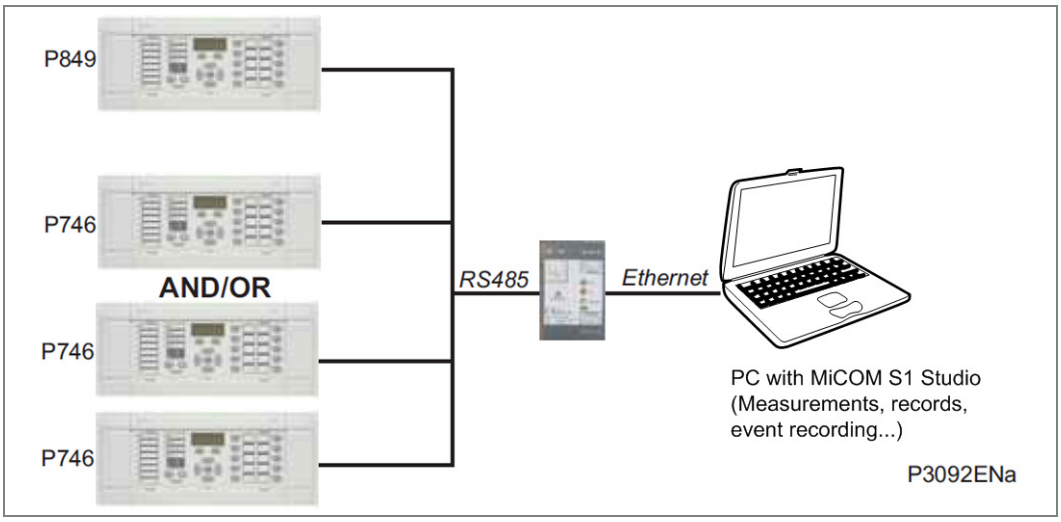

Figure 3 – Ethernet connection example

Using Ethernet hardware options, high-speed communication exchanges are possible through an Ethernet network.

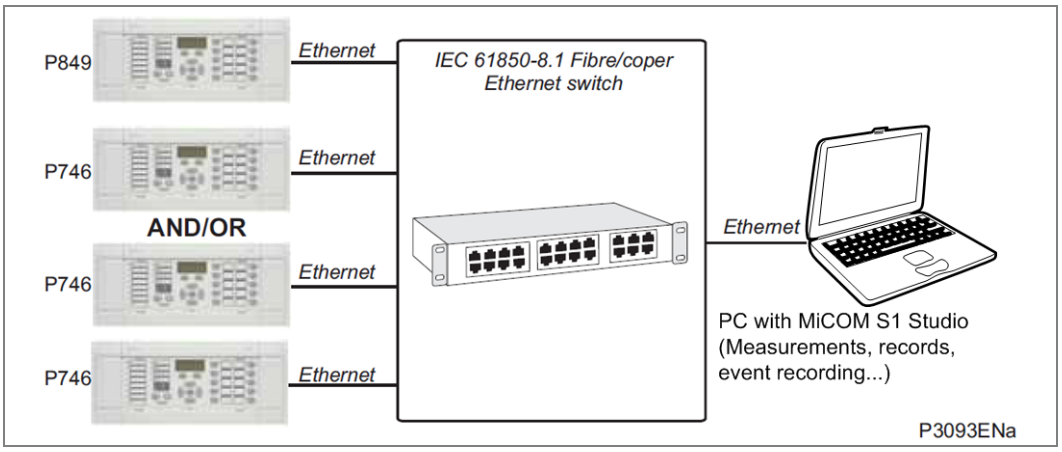

Figure 4 – Ethernet connection example

Redundant Ethernet connections are performed with Redundant Ethernet (Self Healing, Dual homing or Rapid Spanning Tree Protocol) options (refer to Px4x/EN REB user guide).

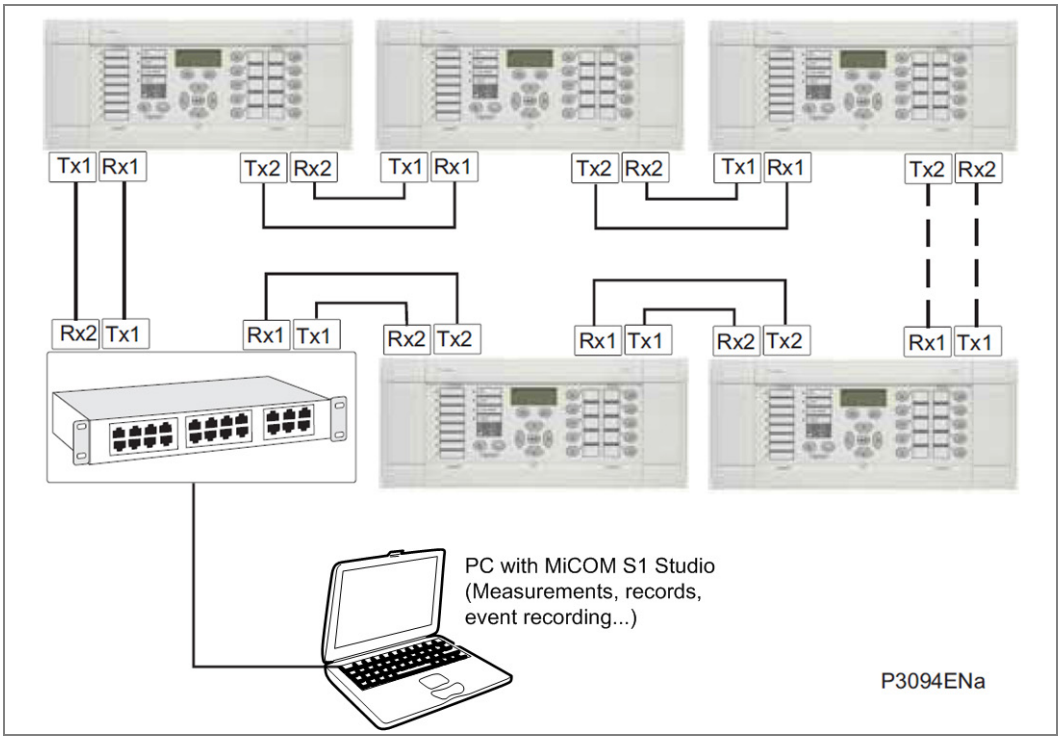

Figure 5 – Redundant ethernet board connection

4 COURIER INTERFACE

4.1 Courier Protocol

Courier is a Schneider Electric communication protocol. The concept of the protocol is that a standard set of commands is used to access a database of settings and data in the relay. This allows a generic master to be able to communicate with different slave devices. The application-specific aspects are contained in the database rather than the commands used to interrogate it, so the master station does not need to be preconfigured.

The same protocol can be used through two physical links K-Bus or EIA(RS)-232.

K-Bus is based on EIA(RS)-485 voltage levels with HDLC FM0 encoded synchronous signaling and its own frame format. The K-Bus twisted pair connection is unpolarized, whereas the EIA(RS)-485 and EIA(RS)-232 interfaces are polarized.

The EIA(RS)-232 interface uses the IEC60870-5 FT1.2 frame format.

The relay supports an IEC60870-5 FT1.2 connection on the front-port. This is intended for temporary local connection and is not suitable for permanent connection. This interface uses a fixed baud rate, 11-bit frame, and a fixed device address.

The rear interface is used to provide a permanent connection for K-Bus and allows multi-drop connection. Although K-Bus is based on EIA(RS)-485 voltage levels, it is a synchronous HDLC protocol using FM0 encoding. It is not possible to use a standard EIA(RS)-232 to EIA(RS)-485 converter to convert IEC60870-5 FT1.2 frames to K-Bus. Also it is not possible to connect K-Bus to an EIA(RS)-485 computer port. A protocol converter, such as the KITZ101, should be used for this purpose.

For a detailed description of the Courier protocol, command-set and link description, see the following documentation:

R6509	K-Bus Interface Guide
R6510	IEC60870 Interface Guide
R6511	Courier Protocol
R6512	Courier User Guide

4.2 Supported Command Set

The following Courier commands are supported by the relay:

Protocol Layer:

- Reset Remote Link
- Poll Status
- Poll Buffer*

Low Level Commands:

- Send Event*
- Accept Event*
- Send Block
- Store Block Identifier
- Store Block Footer

Menu Browsing:

- Get Column Headings
- Get Column Text
- Get Column Values
- Get Strings
- Get Text
- Get Value
- Get Column Setting Limits

Setting Changes:

- Enter Setting Mode
- Preload Setting
- Abort Setting
- Execute Setting
- Reset Menu Cell
- Set Value

Control Commands:

- Select Setting Group
- Change Device Address*
- Set Real Time

Note	*Commands marked with an asterisk (*) are not supported through the front Courier port.*

4.3 Courier Database

The Courier database is two-dimensional. Each cell in the database is referenced by a row and column address. Both the column and the row can take a range from 0 to 255. Addresses in the database are specified as hexadecimal values, for example, 0A02 is column 0A (10 decimal) row 02. Associated settings or data are part of the same column. Row zero of the column has a text string to identify the contents of the column and to act as a column heading.

The *Relay Menu Database document* contains the complete database definition for the relay. For each cell location the following information is stated:

- Cell Text
- Cell Data type
- Cell value
- Whether the cell is settable, if so
- Minimum value
- Maximum value
- Step size
- Password Level required to allow setting changes
- String information (for Indexed String or Binary flag cells)

4.4 Setting Changes

4.4.1 Relay Settings

There are three categories of settings in the relay database:

- Control and support
- Disturbance recorder
- Protection settings group

Setting changes made to the control and support settings are implemented immediately and stored in non-volatile memory. Changes made to either the Disturbance recorder settings or the Protection Settings Groups are stored in a 'scratchpad' memory and are not immediately implemented by the relay.

To action setting changes stored in the scratchpad the Save **Changes cell** in the **Configuration** column must be written to. This allows the changes to either be confirmed and stored in non-volatile memory, or the setting changes to be aborted.

4.4.2 Setting Transfer Mode

If it is necessary to transfer all of the relay settings to or from the relay, a cell in the **Communication System Data** column can be used. This cell (location BF03) when set to 1 makes all of the relay settings visible. Any setting changes made with the relay set in this mode are stored in scratchpad memory, including control and support settings. When the value of BF03 is set back to 0, any setting changes are verified and stored in non-volatile memory.

4.5 Event Extraction

Events can be extracted either automatically (rear port only) or manually (either Courier port). For automatic extraction all events are extracted in sequential order using the standard Courier event mechanism, this includes fault/maintenance data if appropriate. The manual approach allows the user to select events, faults, or maintenance data at random from the stored records.

4.5.1 Automatic Event Extraction

(See Chapter 7 Courier User Guide, publication R6512).

This method is intended for continuous extraction of event and fault information as it is produced. It is only supported through the rear Courier port.

When new event information is created, the Event bit is set in the Status byte. This indicates to the Master device that event information is available. The oldest, unextracted event can be extracted from the relay using the Send Event command. The relay responds with the event data, which is either a Courier Type 0 or Type 3 event. The Type 3 event is used for fault records and maintenance records.

Once an event has been extracted from the relay, the Accept Event can be used to confirm that the event has been successfully extracted. If all events have been extracted, the event bit is reset. If there are more events still to be extracted, the next event can be accessed using the **Send Event** command as before.

4.5.2 Event Types

Events are created by the relay under these circumstances:

- Change of state of output contact
- Change of state of opto input
- Protection element operation
- Alarm condition
- Setting change
- Password entered/timed-out
- Fault record (Type 3 Courier Event)
- Maintenance record (Type 3 Courier Event)

4.5.3 Event Format

The Send Event command results in these fields being returned by the relay:

- Cell reference
- Time stamp
- Cell text
- Cell value

The *Relay Menu Database* document for the relevant product, contains a table of the events created by the relay and indicates how the contents of the above fields are interpreted. Fault records and Maintenance records return a Courier Type 3 event, which contains the above fields with two additional fields:

- Event extraction column
- Event number

These events contain additional information that is extracted from the relay using the referenced extraction column. Row 01 of the extraction column contains a setting that allows the fault/maintenance record to be selected. This setting should be set to the event number value returned in the record. The extended data can be extracted from the relay by uploading the text and data from the column.

4.5.4 Manual Event Record Extraction

Column 01 of the database can be used for manual viewing of event, fault, and maintenance records. The contents of this column depend on the nature of the record selected. It is possible to select events by event number and to directly select a fault record or maintenance record by number.

Event Record selection (Row 01)

This cell can be set to a value between 0 to 511 to select from 512 stored events. 0 selects the most recent record and 511 the oldest stored record. For simple event records, (Type 0) cells 0102 to 0105 contain the event details. A single cell is used to represent each of the event fields. If the event selected is a fault or maintenance record (Type 3), the remainder of the column contains the additional information.

Maintenance Record Selection (Row F0)

This cell can be used to select a maintenance record using a value between 0 and 4. This cell operates in a similar way to the fault record selection.

If this column is used to extract event information from the relay, the number associated with a particular record changes when a new event or fault occurs.

4.6 Disturbance Record Extraction

The stored disturbance records in the relay are accessible in a compressed format through the Courier interface. The records are extracted using column B4. Cells required for extraction of uncompressed disturbance records are not supported.

Select Record Number (Row 01)

This cell can be used to select the record to be extracted. Record 0 is the oldest unextracted record, already extracted older records are assigned positive values, and negative values are used for more recent records. To help automatic extraction through the rear port, the Disturbance bit of the Status byte is set by the relay whenever there are unextracted disturbance records.

Once a record has been selected, using the above cell, the time and date of the record can be read from cell 02. The disturbance record can be extracted using the block transfer mechanism from cell B00B. The file extracted from the relay is in a compressed format. Use MiCOM S1 Studio to decompress this file and save the disturbance record in the COMTRADE format.

As has been stated, the rear Courier port can be used to extract disturbance records automatically as they occur. This operates using the standard Courier mechanism, see *Chapter 8 of the Courier User Guide*. The front Courier port does not support automatic extraction although disturbance record data can be extracted manually from this port.

4.7 Programmable Scheme Logic (PSL) Settings

The Programmable Scheme Logic (PSL) settings can be uploaded from and downloaded to the relay using the block transfer mechanism defined in the Courier User Guide.

These cells are used to perform the extraction:

- B204 Domain — Used to select either PSL settings (upload or download) or PSL configuration data (upload only)
- B208 Sub-Domain — Used to select the Protection Setting Group to be uploaded or downloaded.
- B20C Version — Used on a download to check the compatibility of the file to be downloaded with the relay.
- B21C Transfer Mode — Used to set up the transfer process.
- B120 Data Transfer Cell — Used to perform upload or download.

The PSL settings can be uploaded and downloaded to and from the relay using this mechanism. If it is necessary to edit the settings, MiCOM S1 Studio must be used because the data is compressed. MiCOM S1 Studio also performs checks on the validity of the settings before they are downloaded to the relay.

5 MODBUS INTERFACE

The MODBUS interface is a master/slave protocol and is defined by: www.modbus.org
MODBUS Serial Protocol Reference Guide: PI-MBUS-300 Rev. E

5.1 Serial Interface

The MODBUS interface uses the first rear EIA(RS)-485 (RS485) two-wire port “RP1” (or converted fiber optic port). The port is designated “EIA(RS)-485/K-Bus Port” on the external connection diagrams.
The interface uses the MODBUS RTU communication mode rather than the ASCII mode since it provides for more efficient use of the communication bandwidth and is in widespread use. This communication mode is defined by the MODBUS standard.

5.1.1 Character Framing

The character framing is 1 start bit, 8 data bits, either 1 parity bit and 1 stop bit, or 2 stop bits. This gives 11 bits per character.

5.1.2 Maximum MODBUS Query and Response Frame Size

The maximum query and response frame size is limited to 260 bytes in total. (This includes the frame header and CRC footer, as defined by the MODBUS protocol.).

5.1.3 User Configurable Communications Parameters

The following parameters can be configured for this port using the product’s front panel user interface (in the communications sub-menu):

- Baud rate: 9600, 19200, 38400 bps
- Device address: 1 - 247
- Parity: Odd, even, none.
- Inactivity time: 1 - 30 minutes

Note	*The inactivity timer is started (or restarted) whenever the active password level is reduced when a valid password is entered, or when a change is made to the setting scratchpad. When the timer expires, the password level is restored to its default level and any pending (uncommitted) setting changes on the scratch pad are discarded. The inactivity timer is disabled when the password level is at its default value and there are no settings pending on the scratchpad. See the Setting Changes section.*

The MODBUS interface communication parameters are not part of the product’s setting file and cannot be configured with MiCOM S1 Studio.

5.2 Supported MODBUS Query Functions

The MODBUS protocol provides numerous query functions, of which the product supports the subset in the following table. The product responds with exception code 01 if any other query function is received by it.

Query function code	MODBUS query name	Application / Interpretation
01	Read Coil Status	Read status of output contacts (0x addresses)
02	Read Input Status	Read status of opto-isolated status inputs (1x addresses)
03	Read Holding Registers	Read setting values (4x addresses)
04	Read Input Registers	Read measurement values (3x addresses)
06	Preset Single Register	Write single setting value (4x addresses)
07	Read Exception Status	Read relay status, same value as register 3x1
08	Diagnostics	Application defined by the MODBUS protocol specification
11	Fetch Communication Event Counter	
12	Fetch Communication Event Log	
16	Preset Multiple Registers (127 max)	Write multiple setting values (4x addresses)

Table 2 - MODBUS query functions supported by the product

5.3 MODBUS Response Code Interpretation

Code	MODBUS response name	Product interpretation
01	Illegal Function Code	The function code transmitted is not supported.
02	Illegal Data Address	The start data address in the request is not an allowable value. If any of the addresses in the range cannot be accessed due to password protection, all changes in the request are discarded and this error response is returned. Note If the start address is correct but the range includes non-implemented addresses, this response is not produced.
03	Illegal Value	A value referenced in the data field transmitted by the master is not in range. Other values transmitted in the same packet are executed if they are in the range.
04	Slave Device Failure	An exception arose during the processing of the received query that is not covered by any of the other exception codes in this table.
05	Acknowledge	Not used.
06	Slave Device Busy	The write command cannot be implemented due to the product's internal database being locked by another interface. This response is also produced if the product is busy executing a previous request.

Table 3 - MODBUS response code interpretation

5.4 Register Mapping

5.4.1 Conventions

5.4.1.1 Memory Pages

The MODBUS specification associates a specific register address space to each query that has a data address field. The address spaces are often called memory pages because they are analogous to separate memory devices. A simplistic view of the queries in MODBUS is that a specified location in a specified memory device is being read from or written to. However, the product's implementation of such queries is not as a memory access but as a translation to an internal database query (see Note).

Note	*One consequence of this is that the granularity of the register address space (in the 3x and 4x memory pages) is governed by the size of the data item being requested from the internal database. Since this is often more than the 16 bits of an individual register, not all register addresses are valid. See the Register Data Types section for more details.*

Each MODBUS memory page has a name and an ID. The *MODBUS "memory" pages reference and application* table provides a summary of the memory pages, their Ids, and their application in the product.

It is common practice to prefix a decimal register address with the page ID and generally this is the style used in this document.

Memory page ID	MODBUS memory page name	Product application
0xxxx	Coil Status	Read and write access of the Output Relays.
1xxxx	Input Status	Read only access of the Opto-Isolated Status Inputs.
3xxxx	Input Registers	Read-only data access, such as measurements and records.
4xxxx	Holding Registers	Read and write data access, such as product configurations settings and control commands.
6xxxx	Extended Memory File	Not used or supported.
Note	*xxxx represents the addresses available in the page (0 to 9999).*	

Table 4 - MODBUS "memory" pages reference and application

5.4.1.2 MODBUS Register Identification

The MODBUS convention is to document register identifiers with ordinal values (first, second, third…) whereas the actual protocol uses memory-page based register addresses that begin with address zero. Therefore the first register in a memory page is register address zero, the second register is register address 1 and so on. In general, one must be subtracted from a register's identifier to find its equivalent address. The page number notation is not part of the address.

Example:

Task:

Obtain the status of the output contacts from the Schneider Electric MiCOM Pxxx device at address 1.

The output contact status is a 32-bit binary string held in input registers 3x8 and 3x9 (see the *Binary Status Information* section).

Select MODBUS function code 4 “Read input registers” and request two registers starting at input register address 7. Note the register address is one less than the required register ordinal.

The MODBUS query frame is:

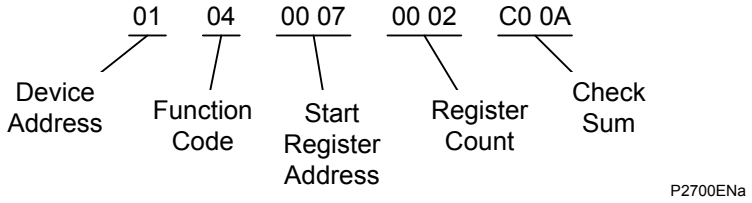

Note that the following frame data is shown in hexadecimal 8-bit bytes.

The frame is transmitted from left to right by the master device. The start register address, register count and check sum are all 16-bit numbers that are transmitted in a high byte - low byte order.

The query may elicit the following response: [4]

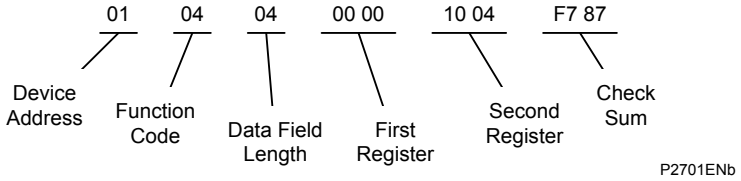

The frame was transmitted from left to right by the slave device. The response frame is valid because the eighth bit of the function code field is not set. The data field length is 4 bytes since the query was a read from two 16-bit registers. The data field consists of two pairs of bytes in a high byte - low byte order with the first requested register’s data coming first. Therefore the request for the 32-bit output contact status starting at register 3x8 is 00001004h (1000000000100b), which shows that outputs 3 and 13 are energized and the remaining outputs are de-energized.

5.5 Event Extraction

The product can store up to 512 event records in battery backed-up memory. An event record consists of a time stamp, a record type, and a set of information fields. The record type and the information fields record the event that occurred at the time captured by the time stamp.

The product has several classes of event record:

- Alarm events
- Opto-isolated status input events
- Relay contact output events
- Protection/DDB operation events
- Fault data capture events
- General events

The *Relay Menu Database document* specifies the available events. The product provides an “event filtering” feature that may be used to prevent specific events from being logged. The event filter is configured in the **Record Control** section of the product’s menu database in the MiCOM S1 Studio configuration tool.

The product supports two methods of event extraction providing either automatic or manual extraction of the stored event, fault, and maintenance records.

The product stores event, fault, and maintenance records in three separate queues. As entries are added to the fault and maintenance queues, a corresponding event is added to the event queue. Each queue is of different length and each queue may be individually cleared – see the *Event Record Delection* section. It is therefore possible to have a fault event or a maintenance event entry in the event queue with no corresponding entry in the associated queue because it has been overwritten or deleted.

The manual extraction procedure (see the *Manual Extraction Procedure section*) allows each of these three queues to be read independently.

The automatic extraction procedure (sss the *Automatic Extraction Procedure* s*ection*) reads records from the event queue. If the event record is a fault or a maintenance record, the record’s extended data is read also, if it is available from their queues.

Note	*Version 31 of the product introduced a new set of 3x registers for the presentation of the event and fault record data. These registers are used throughout the text of the following sub-sections. For legacy compatibility, the original registers are still provided. These are described as previous MODBUS addresses in the Relay Menu Database document. They should not be used for new installations. See the* ***Legacy Event Record Support*** *section for additional information.*

5.5.1 Manual Extraction Procedure

There are three registers used to manually select stored records. For each of these registers, zero represents the most-recent stored record. For example:

- 4x00100 - Select Event, 0 to 511.
  511 was 249 in P24x software version 57, P34x/P64x software versions 01, 02, 03, 04, 05, 06, & 07, since they only stored 250 event records.
- 4x00101 - Select Fault, 0 to 4
- 4x00102 - Select Maintenance Record, 0 to 4

The following registers can be read to indicate the numbers of the various types of record stored.

- 30100 - Number of stored records
- 30101 - Number of stored fault records
- 30102 - Number of stored maintenance records

Each fault or maintenance record logged causes an event record to be created by the relay. If this event record is selected the additional registers allowing the fault or maintenance record details will also become populated.

5.5.2 Automatic Extraction Procedure

Automatic event-record extraction allows records to be extracted as they occur. Event records are extracted in sequential order, including any fault or maintenance data that may be associated with an event.

The MODBUS master can determine whether the product has any events stored that have not yet been extracted. This is done by reading the product's status register 3x00001 (G26 data type). If the event bit of this register is set, the product contains event records that have not yet been extracted.

To select the next event for sequential extraction, the master station writes a value of one to the record selection register 4x00400 (G18 data type). The event data, plus any fault or maintenance data, can be read from the registers specified in the *Record Data* section. Once the data has been read, the event record is marked. This is done by writing a value of 2 to register 4x00400. The G18 data type consists of bit fields. Therefore it is also possible to both mark the current record as read and automatically select the next unread record. This is done by writing a value of 3 to the register.

When the last (most recent) record is accepted, the event flag in the status register (3x00001) resets. If the last record is accepted by writing a value of 3 to the record selection register (4x00400), a dummy record appears in the event-record registers with an "Event Type" value of 255. Selecting another record when none are available gives a MODBUS exception code 3, "Invalid value" (see the *MODBUS Response Code Interpretation* section).

One possible event record extraction procedure is shown in the following *Automatic event extraction procedure* diagram.

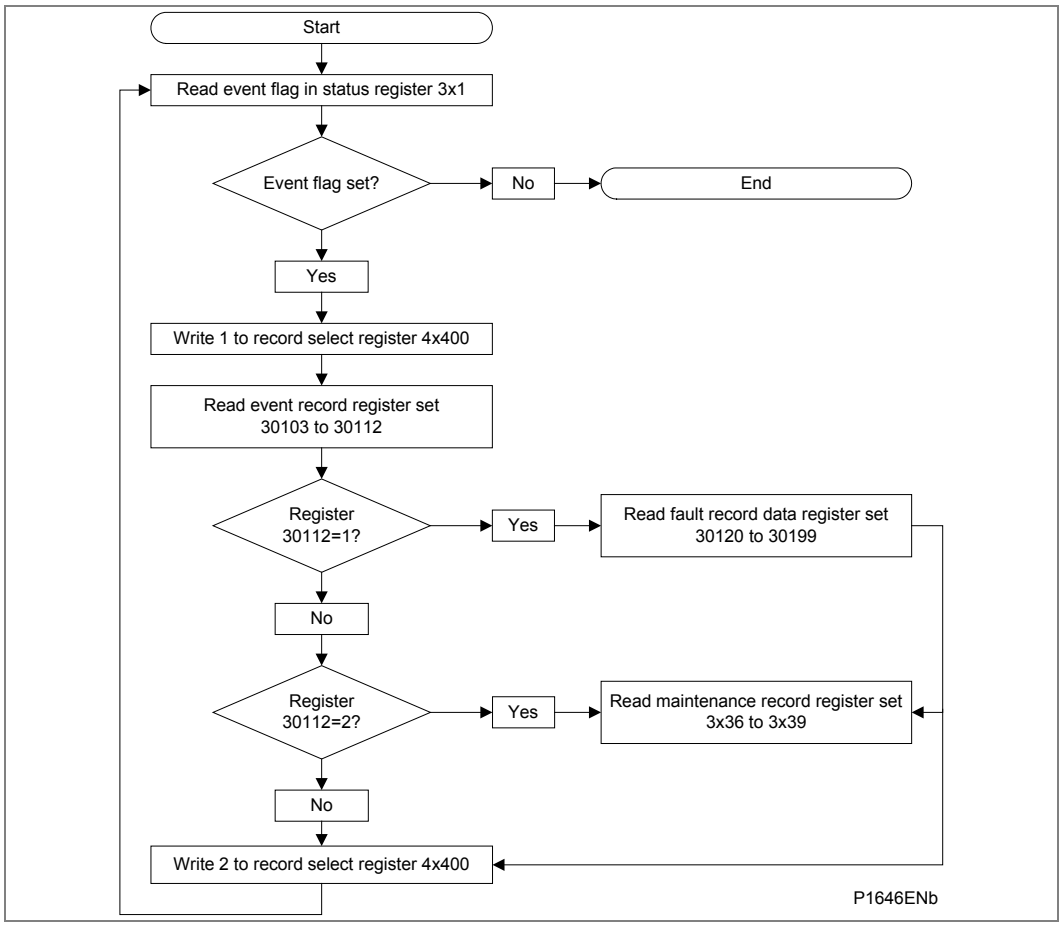

Figure 6 - Automatic event extraction procedure

5.5.3 Record Data

The location and format of the registers used to access the record data is the same whether they have been selected using manual or automatic extraction mechanisms, see the *Manual Extraction Procedure* and *Automatic Extraction Procedure* sections.

Description	Register	Length (registers)	Comments
Time Stamp	30103	4	See G12 data type in the Relay Menu Database document.
Event Type	30107	1	Indicates the type of the event record. See G13 data type in the Relay Menu Database document (a value of 255 indicates that the end of the event log has been reached).
Event Value	30108	2	Contains the associated status register value as a string of binary flags for relay-contact, opto-input, alarm, and protection events. Otherwise it has a value of zero. When a status value is supplied, the value represents the recorded value of the event types associated register pair, as indicated by the Event Origin value (see Note 1).

Description	Register	Length (registers)	Comments
Event Origin	30110	1	The Event Original value indicates the MODBUS Register pair where the change occurred (see Note 2). Possible values are: 30011: Alarm Status 1 event 30013: Alarm Status 2 event 30015: Alarm Status 3 event 30723: Relay contact event (2 registers: DDB 0-31 status) 30725: Status input event (2 registers: DDB 32-63 status) 30727 to 30785: Protection events (Indicates the 32-bit DDB status word that was the origin of the event) For General events, Fault events, and Maintenance events, a value of zero is returned.
Event Index	30111	1	The Event Index value is used to distinguish between events with the same Event Type and Event Origin. The registers value depends on the type of the event: For protection events, the value is the ID of the DDB that caused the event. For alarm events, the value is the ID of the alarm that caused the event. In both cases, the value includes the direction of the state transition in the Most Significant Bit. This direction bit is 1 for a 0-1 (low to high) change, and 0 for a 1-0 (high to low) change. For all other types of events, it has a value of zero.
Additional Data Present	30112	1	Indicates whether the record has additional data. 0: Indicates that there is no additional data. 1: Indicates that fault record data can be read from 3x10020 to 3x10999 (see Note 3). 2: Indicates that maintenance record data can be read from registers 3x36 to 3x39.

Note 1 *The protection-event status information is the value of the DDB status word that contains the protection DDB that caused the event.*

Note 2 *Subtracting 3000 from the Event Origin value results in the MODBUS 3x memory-page register ID, subtracting one from this results in the MODBUS register address - see section 5.4.1.2. The resultant register address can be used in a function code 4 MODBUS query.*

Note 3 *The exact number of fault record registers depends on the individual product - see Relay Menu Database.*

Table 5 – MODBUS Event record extraction registers

If a fault record or maintenance record is directly selected using the manual mechanism, the data can be read from the fault or maintenance data register ranges specified in the *Maintenance record types* table. The event record data in registers 3x10003 to 3x10012 is not valid.

See the *Relay Menu Database document* for the record values for each event.

The general procedure for decoding an event record is to use the value of the **Event Type** field combined with the value of the **Event Index** field to uniquely identify the event. The exceptions to this are event types 4, 5, 7, 8, & 9.

Event types 4 **Relay Contact Output Events** and 5 **Opto-Isolated Status Input Events** only provide the value of the input or output status register (as indicated by the Event Origin value) when the event occurred. If event transition information for each input or output is required, it must be deduced by comparing the event value with the previous event value (for identically-typed events records).

Event type 7 **General Event** events are solely identified by their **Event Value**.

Event types 8 **Fault Record** and 9 **Maintenance Record** require additional registers to be read when the associated additional data is available (see Note). The Fault record registers in the range 30120 to 30199 (the exact number of registers depends on the individual product) are documented in the 3x register-map in the *Relay Menu Database document*. The two additional 32-bit maintenance record register-pairs consist of a maintenance record type (register pair 3x36/7) and a type-specific error code (register pair 3x38/9). The *Maintenance record types* table lists the different types of maintenance record available from the product.

Note	*As noted at the beginning of the Event Extraction section, it should not be assumed that the additional data is available for fault and maintenance record events.*

Maintenance record	Front panel text	Record type 3x00036
Power on test errors (non-fatal)		
Watchdog 1 failure (fast)	Fast W'Dog Error	0
Battery fail	Battery Failure	1
Battery-backed RAM failure	BBRAM Failure	2
Field voltage failure	Field Volt Fail	3
Ribbon bus check failure	Bus Reset Error	4
Watchdog 2 failure (slow)	Slow W'Dog Error	5
Continuous self-test errors		
SRAM bus failure	SRAM Failure Bus	6
SRAM cell failure	SRAM Failure Blk.	7
Flash EPROM checksum failure	FLASH Failure	8
Program code verify failure	Code Verify Fail	9
Battery-backed RAM failure	BBRAM Failure	10
Battery fail	Battery Failure	11
Field Voltage failure	Field Volt Fail	12
EEPROM failure	EEPROM Failure	13
Fatal software exception	Software Failure	14
Incorrect hardware configuration	H/W Verify Fail	15
Software exception (typically non-fatal)	Non Standard	16
Analog module failure	Ana. Sample Fail	17
Ethernet card error	NIC Soft Error	18

Table 6 - Maintenance record types

5.6 Disturbance Record Extraction

The product provides facilities for both manual and automatic extraction of disturbance records. The two methods differ only in the mechanism for selecting a disturbance record; the method for extracting the data and the format of the data are identical.

Records extracted are presented in IEEE COMTRADE format. This involves extracting two files: an ASCII text configuration file, and a binary data file.

Each file is extracted by repeatedly reading a data-page until all of the file's data has been transferred. The data-page is made up of 127 registers; providing a maximum of 254 bytes for each register block request.

5.6.1 Interface Registers

The following set of registers is presented to the master station to support the extraction of uncompressed disturbance records:

Register	Name	Description
3x00001	Status register	Provides the status of the product as bit flags: b0 Out of service b1 Minor self test failure b2 Event b3 Time synchronization b4 Disturbance b5 Fault b6 Trip b7 Alarm b8 to b15 Unused A '1' in bit "b4" indicates the presence of one or more disturbance records.
3x00800	Number of stored disturbances	Indicates the total number of disturbance records currently stored in the product, both extracted and unextracted.
3x00801	Unique identifier of the oldest disturbance record	Indicates the unique identifier value for the oldest disturbance record stored in the product. This is an integer value used with the **Number of stored disturbances** value to calculate a value for manually selecting records.
4x00250	Manual disturbance record selection register	This register is used to manually select disturbance records. The values written to this cell are an offset of the unique identifier value for the oldest record. The offset value, which ranges from 0 to the N^{o} of stored disturbances - 1, is added to the identifier of the oldest record to generate the identifier of the required record.
4x00400	Record selection command register	This register is used during the extraction process and has several commands. These are: b0 Select next event b1 Accept event b2 Select next disturbance record b3 Accept disturbance record b4 Select next page of disturbance data b5 Select data file
3x00930 to 3x00933	Record time stamp	These registers return the timestamp of the disturbance record.
3x00802	Number of registers in data page	This register informs the master station of the number of registers in the data page that are populated.
3x00803 to 3x00929	Data page registers	These 127 registers are used to transfer data from the product to the master station.

Register	Name	Description
3x00934	Disturbance record status register	The disturbance record status register is used during the extraction process to indicate to the master station when data is ready for extraction. See Table 9.
4x00251	Data file format selection	This is used to select the required data file format. This is reserved for future use.

Note *Register addresses are provided in reference code + address format. E.g. 4x00001 is reference code 4x, address 1 (which is specified as function code 03, address 0x0000 in the MODBUS specification).*

Table 7 - Disturbance record extraction registers

The Disturbance Record status register reports one of these values:

State		Description
Idle		This is the state reported when no record is selected; such as after power-on or after a record has been marked as extracted.
Busy		The product is currently processing data.
Page ready		The data page has been populated and the master can now safely read the data.
Configuration complete		All of the configuration data has been read without error.
Record complete	4	All of the disturbance data has been extracted.
Disturbance overwritten	5	An error occurred during the extraction process where the disturbance being extracted was overwritten by a new record.
No unextracted disturbances	6	An attempt was made by the master station to automatically select the next oldest unextracted disturbance when all records have been extracted.
Not a valid disturbance	7	An attempt was made by the master station to manually select a record that did not exist in the product.
Command out of sequence	8	The master station issued a command to the product that was not expected during the extraction process.

Table 8 - Disturbance record status register (3x934) values

5.6.2 Extraction Procedure

The following procedure must be used to extract disturbance records from the product. The procedure is split into four sections:

1. Selection of a disturbance, either manually or automatically.
2. Extraction of the configuration file.
3. Extraction of the data file.
4. Accepting the extracted record (automatic extraction only).

5.6.2.1 Manual Extraction Procedure

The procedure used to extract a disturbance manually is shown in the following *Manual selection of a disturbance record* diagram. The manual method of extraction does not allow for the acceptance of disturbance records.

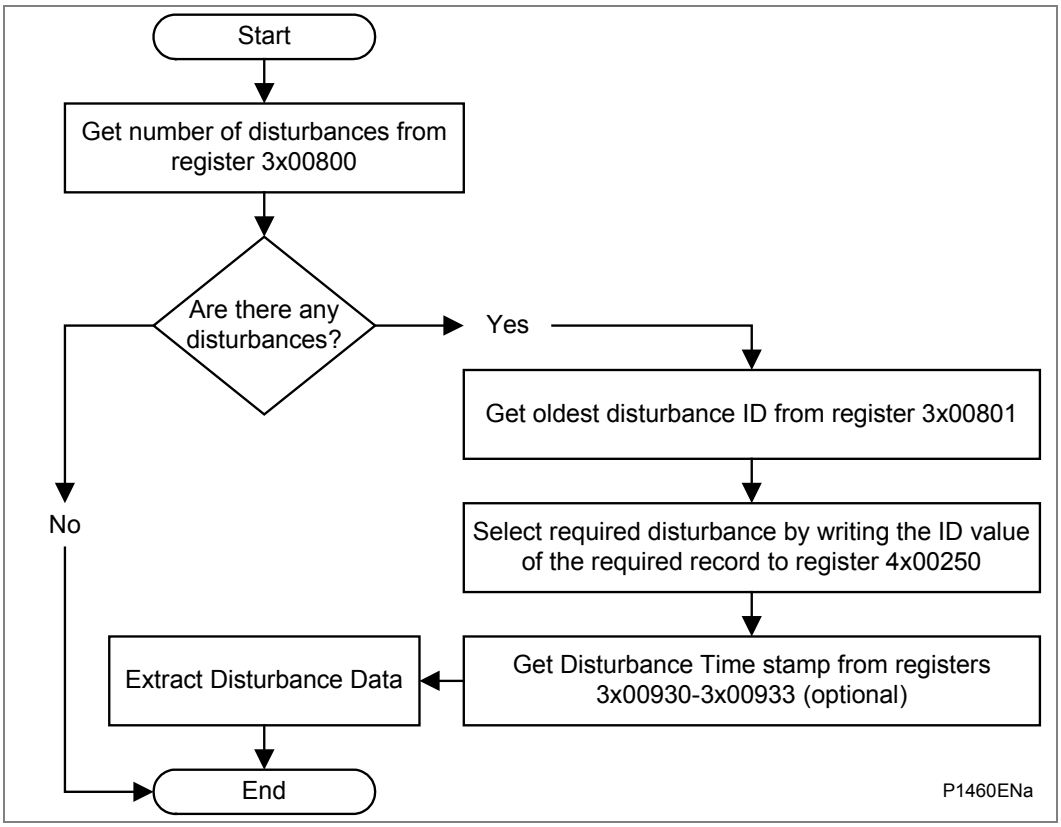

Figure 7 - Manual selection of a disturbance record

5.6.2.2 Automatic Extraction Procedure - Option 1

There are two methods that can be used for automatically extracting disturbances. The procedure for the first method is shown in the *Automatic selection of a disturbance - option 1* diagram. This also shows the acceptance of the disturbance record once the extraction is complete.

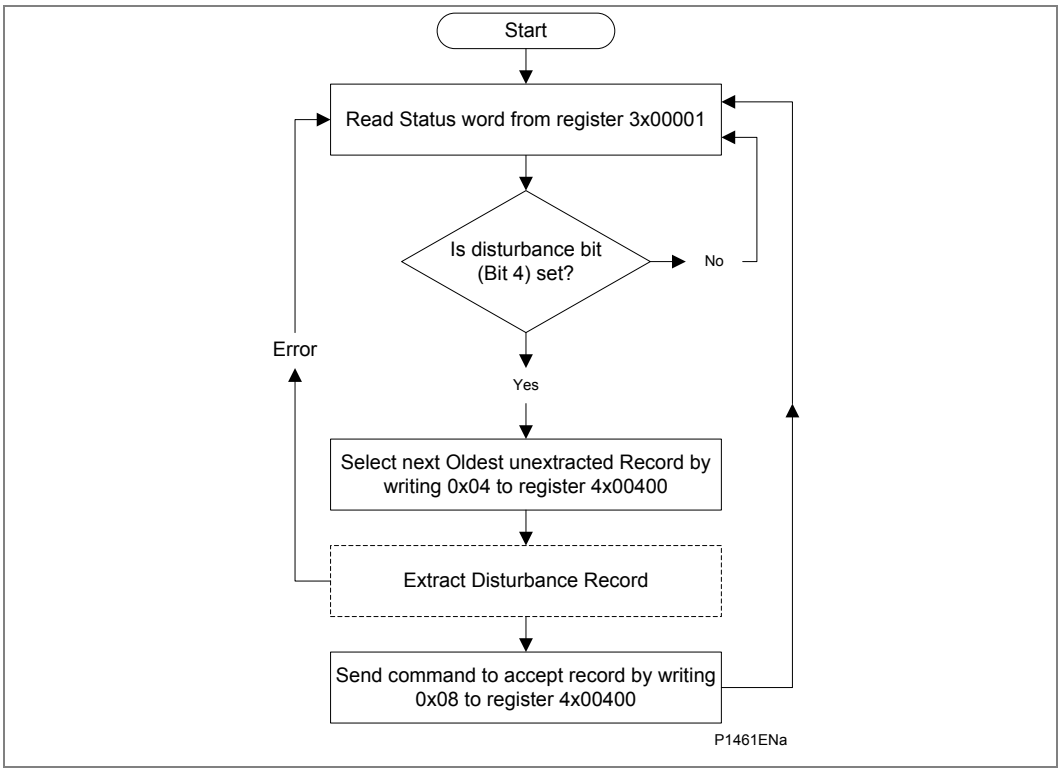

Figure 8 - Automatic selection of a disturbance - option 1

5.6.2.3 Automatic Extraction Procedure - Option 2

The second method that can be used for automatic extraction is shown in the *Automatic selection of a disturbance - option 2* diagram. This also shows the acceptance of the disturbance record once the extraction is complete.

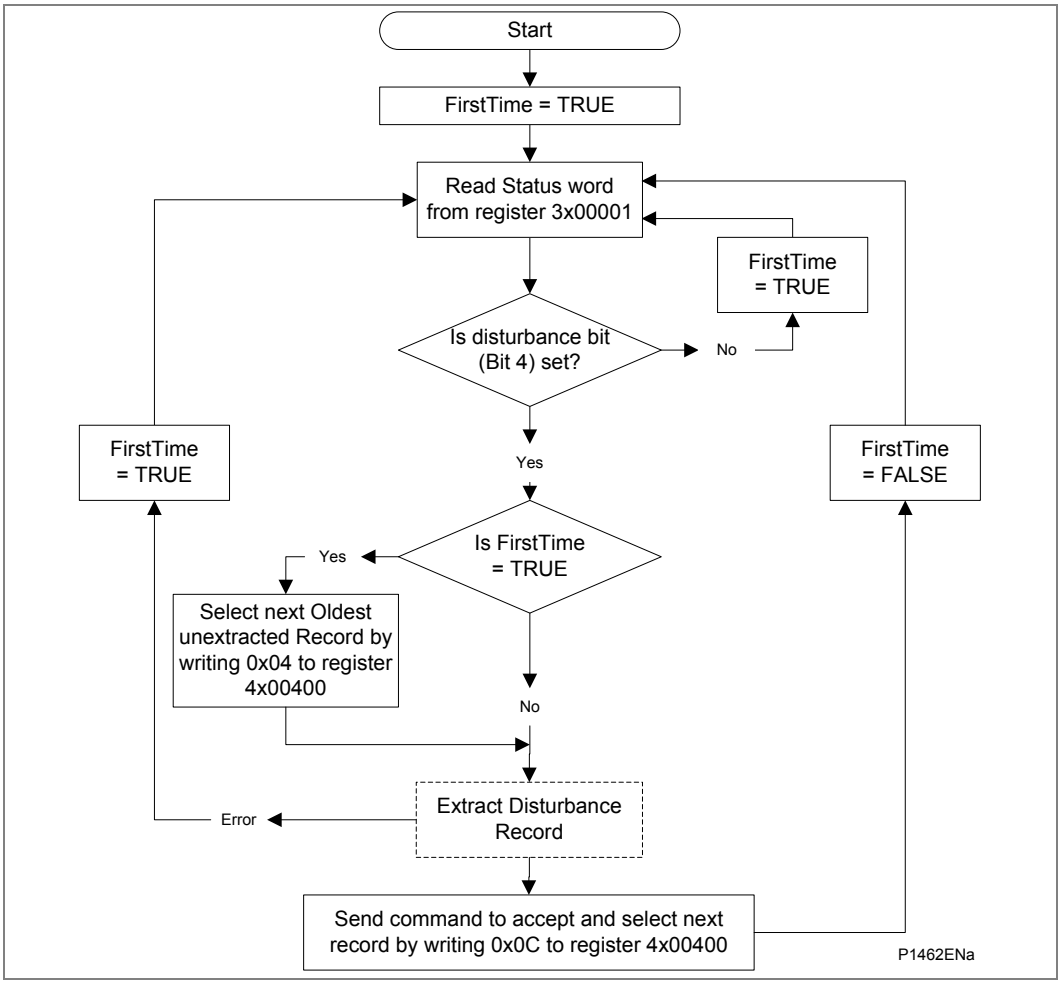

Figure 9 - Automatic selection of a disturbance - option 2

5.6.2.4 Extracting the Disturbance Data

Extraction of a selected disturbance record is a two-stage process. This involves first reading the configuration file, then the data file. The *Extracting the COMTRADE configuration file* diagram shows how the configuration file is read and *the Extracting the COMTRADE binary data file* diagram shows how the data file is extracted.

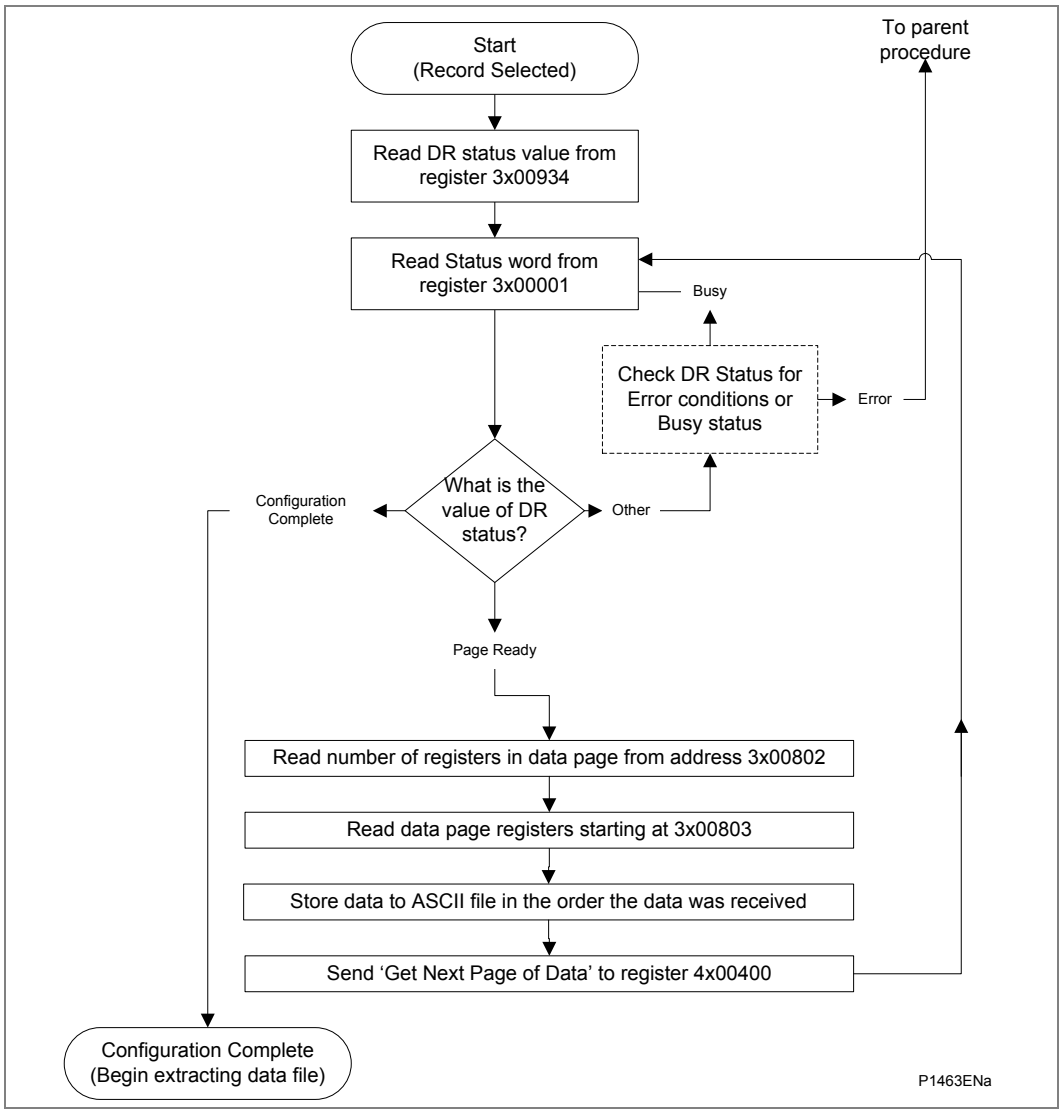

Figure 10 - Extracting the COMTRADE configuration file

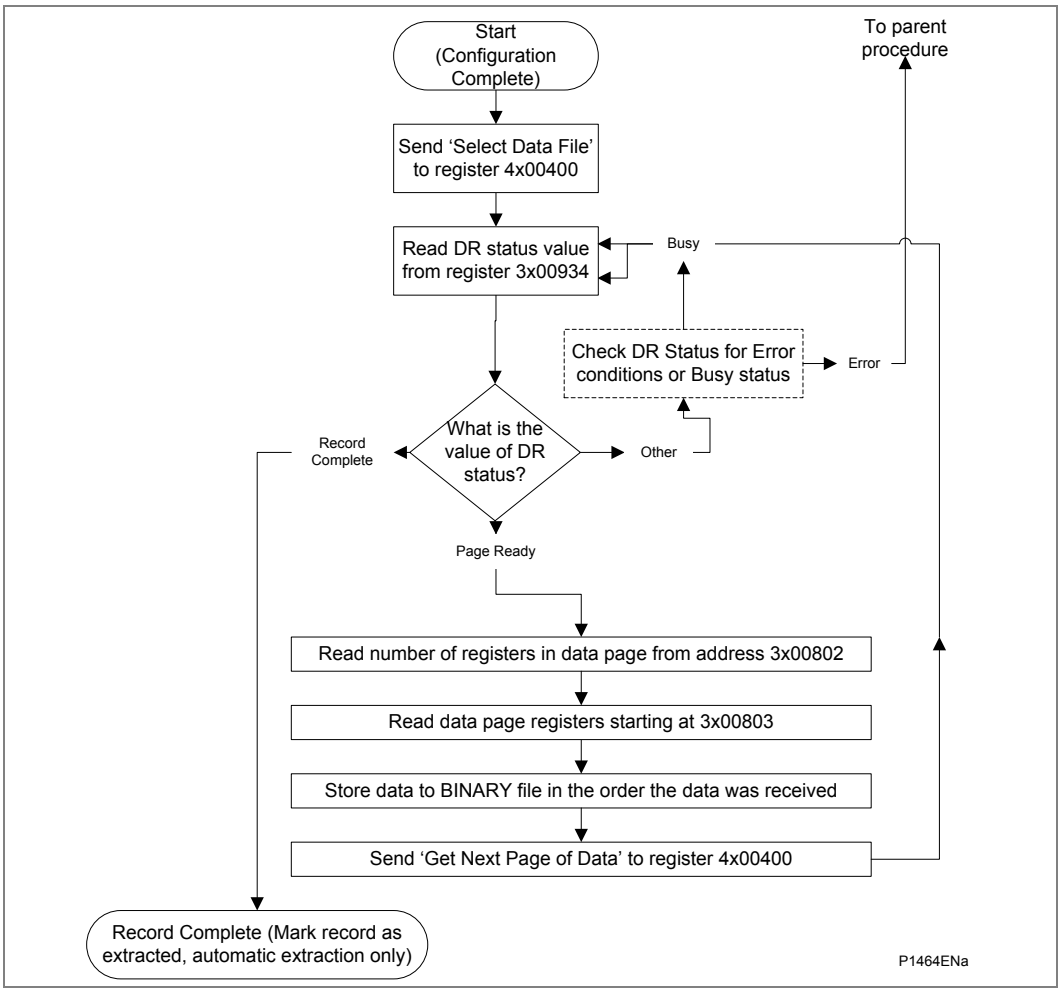

Figure 11 - Extracting the COMTRADE binary data file

During the extraction of a COMTRADE file, an error may occur that is reported in the disturbance record status register, 3x934. This can be caused by the product overwriting the record that is being extracted. It can also be caused by the master issuing a command that is not in the bounds of the extraction procedure.

5.7 Setting Changes

The relay settings can be split into two categories:

- Control and support settings
- Disturbance record settings and protection setting groups

Changes to settings in the control and support area are executed immediately. Changes to the protection setting groups or the disturbance recorder settings are stored in a temporary 'scratchpad' area and must be confirmed before they are implemented. All the product settings are 4xxxx page registers; see the *Relay Menu Database document*. The following points should be noted when changing settings:

- Settings implemented using multiple registers must be written to using a multi-register write operation. The product does not support write access to sub-parts of multi-register data types.
- The first address for a multi-register write must be a valid address. If there are unmapped addresses in the range that is written to, the data associated with these addresses are discarded.
- If a write operation is performed with values that are out of range, an "illegal data" response code is produced. Valid setting values in the same write operation are executed.
- If a write operation is performed attempting to change registers that require a higher level of password access than is currently enabled, all setting changes in the write operation are discarded.

5.7.1 Password Protection

The product's settings can be subject to Password protection. The level of password protection required to change a setting is indicated in the 4x register-map table in the *Relay Menu Database document*. Level 2 is the highest level of password access, level 0 indicates that no password is required.

The following registers are available to control password protection:

Models without Cyber Security

40001 & 40002 Password entry

40022 Default password level

40023 & 40024 Setting to change password level 1

40025 & 40026 Setting to change password level 2

30010 Can be read to indicate current access level

Models with Cyber Security

420008 - 420011 Setting to change password level 1

420016 - 420019 Setting to change password level 2

420024 - 420027 Setting to change password level 1

5.7.2 Control and Support Settings

Control and support settings are committed immediately when a value is written to such a register. The MODBUS registers in this category are:

- 4x00000-4x00599
- 4x00700-4x00999
- 4x02049 to 4x02052
- 4x10000-4x10999

5.7.2.1 Time Synchronization

The value of the product's real time clock can be set by writing the desired time (see the *Date and Time Format (Data Type G12)* section) to registers 4x02049 through 4x02052. These registers are standard to Schneider Electric MiCOM products, which makes it easier to broadcast a time synchronization packet, being a block write to the time setting registers sent to slave address zero.

When the product's time has been set using these registers, the Time Synchronized flag in the MODBUS Status Register (3x1: type G26) is set. The product automatically clears this flag if more than five minutes has elapsed since these registers were last written to.

A "Time synchronization" event is logged if the new time value is more than two seconds different to the current value.

5.7.3 Protection Settings

5.7.4 Scratchpad Management

Register 4x00405 can be used to either confirm or abort the setting changes in the scratchpad area. In addition to the basic editing of the protection setting groups, these functions are provided:

- Default values can be restored to a setting group or to all of the product settings by writing to register 4x00402.
- It is possible to copy the contents of one setting group to another by writing the source group to register 4x00406 and the target group to 4x00407.
- The setting changes performed by either of these two operations are made to the scratchpad area. These changes must be confirmed by writing to register 4x00405.

5.8 Date and Time Format (Data Type G12)

The date-time data type G12 allows real date and time information to be conveyed down to a resolution of 1 ms. The data-type is used for record time-stamps and for time synchronization (see the *Time Synchronization* section).

The structure of the data type is shown in the following table and complies with the IEC60870-5-4 Binary Time 2a format.

Byte	Bit Position							
	7	6	5	4	3	2	1	0
1	m^7	m^6	m^5	m^4	m^3	m^2	m^1	m^0
2	m^{15}	m^{14}	m^{13}	m^{12}	m^{11}	m^{10}	m^9	m^8
3	IV	R	I^5	I^4	I^3	I^2	I^1	I^0
4	SU	R	R	H^4	H^3	H^2	H^1	H^0
5	W^2	W^1	W^0	D^4	D^3	D^2	D^1	D^0
6	R	R	R	R	M^3	M^2	M^1	M^0
7	R	Y^6	Y^5	Y^4	Y^3	Y^2	Y^1	Y^0

Where:

m	=	0…59,999ms	Y	=	0…99 Years (year of century)
I	=	0…59 minutes	R	=	Reserved bit = 0
H	=	0…23 Hours	SU	=	Summertime: 0=standard time, 1=summer time
W	=	1…7 Day of week; Monday to Sunday, 0 for not calculated	IV	=	Invalid value: 0=valid, 1=invalid
D	=	1…31 Day of Month			
M	=	1…12 Month of year; January to December	range	=	0ms…99 years

Table 9 - G12 date & time data type structure

The seven bytes of the structure are packed into four 16-bit registers. Two packing formats are provided: standard and reverse. The prevailing format is selected by the G238 setting in the **Date and Time** menu column or by register 4x306 (Modbus IEC Time).

The standard packing format is the default and complies with the IEC60870-5-4 requirement that byte 1 is transmitted first. This is followed by byte 2 through to byte 7, followed by a null (zero) byte to make eight bytes in total. Since register data is usually transmitted in big-endian format (high-order byte followed by low-order byte), byte 1 is in the high-order byte position followed by byte 2 in the low-order position for the first register. The last register contains just byte 7 in the high-order position and the low-order byte has a value of zero.

The reverse packing format is the exact byte transmission order reverse of the standard format. The null (zero) byte is sent as the high-order byte of the first register and byte 7 as the register's low-order byte. The second register's high-order byte contains byte 6 and byte 5 in its low order byte.

Both packing formats are fully documented in the *Relay Menu Database document* for the G12 type.

The principal application of the reverse format is for date-time packet format consistency when a mixture of MiCOM Px20, Px30, and Px40 series products are being used. This is especially true when there is a requirement for broadcast time synchronization with a mixture of such MiCOM products.

The data type provides only the value for the year of the century. The century must be deduced. The century could be imposed as 20 for applications not dealing with dates stored in this format from the previous (20th) century. Alternatively, the century can be calculated as the one that produces the nearest time value to the current date. For example: 30-12-99 is 30-12-1999 when received in 1999 & 2000, but is 30-12-2099 when received in 2050. This technique allows 2-digit years to be accurately converted to 4 digits in a ±50 year window around the current datum.

The invalid bit has two applications:

- It can indicate that the date-time information is considered inaccurate, but is the best information available.
- Date-time information is not available.

The summertime bit is used to indicate that summertime (day light saving) is being used and, more importantly, to resolve the alias and time discontinuity which occurs when summertime starts and ends. This is important for the correct time correlation of time stamped records.

Note	*The value of the summertime bit does not affect the time displayed by the product.*

The day of the week field is optional and if not calculated is set to zero.

This data type (and therefore the product) does not cater for time zones so the end user must determine the time zone used by the product. UTC (universal co-ordinated time) is commonly used and avoids the complications of daylight saving timestamps.

5.9 Power and Energy Measurement Data Formats (G29 & G125)

The power and energy measurements are available in two data formats, G29 integer format and G125 IEEE754 floating point format. The G125 format is preferred over the older G29 format.

5.9.1 Data Type G29

Data type G29 consists of three registers. The first register is the per-unit power or energy measurement and is of type G28, which is a signed 16-bit quantity. The second and third registers contain a multiplier to convert the per-unit value to a real value.

The multiplier is of type G27, which is an unsigned 32-bit quantity. Therefore the overall value conveyed by the G29 data type must be calculated as G29 = G28 × G27.

The product calculates the G28 per unit power or energy value as

G28 = ((measured secondary quantity) / (CT secondary) × (110 V / (VT secondary)).

Since data type G28 is a signed 16-bit integer, its dynamic range is constrained to ±32768. This limitation should be borne in mind for the energy measurements, as the G29 value saturates a long time before the equivalent G125.

The associated G27 multiplier is calculated as

G27 = (CT primary) × (VT primary / 110 V)
when primary value measurements are selected,
and as
G27 = (CT secondary) × (VT secondary / 110 V)
when secondary value measurements are selected.

Due to the required truncations from floating point values to integer values in the calculations of the G29 component parts and its limited dynamic range, the use of the G29 values is only recommended when the MODBUS master cannot deal with the G125 IEEE754 floating point equivalents.

Note	*The G29 values must be read in whole multiples of three registers. It is not possible to read the G28 and G27 parts with separate read commands.*

Example:

For A-Phase Power (Watts) (registers 3x00300 - 3x00302) for a 110 V nominal, In = 1 A, VT ratio = 110 V:110 V and CT ratio = 1 A : 1 A.

Applying A-phase 1A @ 63.51V

A-phase Watts = ((63.51 V × 1 A) / In=1 A) × (110/Vn=110 V) = 63.51 Watts

The G28 part of the value is the truncated per unit quantity, which is equal to 64 (40h).

The multiplier is derived from the VT and CT ratios set in the product, with the equation ((CT Primary) × (VT Primary) / 110 V)). Therefore the G27 part of the value equals 1 and the overall value of the G29 register set is 64×1 = 64 W.

The registers would contain:

3x00300 - 0040h
3x00301 - 0000h
3x00302 - 0001h

Using the previous example with a VT ratio = 110,000 V:110 V and CT ratio = 10,000 A : 1 A the G27 multiplier would be 10,000 A × 110,000 V / 110 = 10,000,000. The overall value of the G29 register set is 64 × 10,000,000 = 640 MW. (Note that there is an actual error of 49 MW in this calculation due to loss of resolution).

The registers would contain:

3x00300 - 0040h
3x00301 - 0098h
3x00302 - 9680h

5.9.2 Data Type G125

Data type G125 is a short float IEEE754 floating point format, which occupies 32 bits in two consecutive registers. The most significant 16 bits of the format are in the first (low order) register and the least significant 16 bits in the second register.

The value of the G125 measurement is as accurate as the product's ability to resolve the measurement after it has applied the secondary or primary scaling factors as required. It does not suffer from the truncation errors or dynamic range limitations associated with the G29 data format.

6 IEC60870-5-103 INTERFACE

The IEC60870-5-103 interface is a master/slave interface with the relay as the slave device. The relay conforms to compatibility level 2; compatibility level 3 is not supported.

These IEC60870-5-103 facilities are supported by this interface:

- Initialization (Reset)
- Time Synchronization
- Event Record Extraction
- General Interrogation
- Cyclic Measurements
- General Commands
- Disturbance Record Extraction
- Private Codes

6.1 Physical Connection and Link Layer

Two connection options are available for IEC60870-5-103, either the rear EIA(RS)-485 port or an optional rear fiber optic port. If the fiber optic port is fitted, the active port can be selected using the front panel menu or the front Courier port. However the selection is only effective following the next relay power up.

For either of the two connection modes, both the relay address and baud rate can be selected using the front panel menu or the front Courier port. Following a change to either of these two settings a reset command is required to re-establish communications, see the description of the reset command in the *Initialization* section.

6.2 Initialization

Whenever the relay has been powered up, or if the communication parameters have been changed, a reset command is required to initialize the communications. The relay responds to either of the two reset commands (Reset CU or Reset FCB). However, the Reset CU clears any unsent messages in the relay's transmit buffer.

The relay responds to the reset command with an identification message ASDU 5. The Cause Of Transmission (COT) of this response is either Reset CU or Reset FCB depending on the nature of the reset command. For information on the content of ASDU 5 see *section IEC60870-5-103 in the Relay Menu Database document*.

In addition to the ASDU 5 identification message, if the relay has been powered up it also produces a power-up event.

6.3 Time Synchronization

The relay time and date can be set using the time synchronization feature of the IEC60870-5-103 protocol. The relay corrects for the transmission delay as specified in IEC60870-5-103. If the time synchronization message is sent as a send / confirm message, the relay responds with a confirm. Whether the time-synchronization message is sent as a send / confirm or a broadcast (send / no reply) message, a time synchronization Class 1 event is generated.

If the relay clock is synchronised using the IRIG-B input, it is not possible to set the relay time using the IEC60870-5-103 interface. If the time is set using the interface, the relay creates an event using the current date and time from the internal clock, which is synchronised to IRIG-B.

6.4 Spontaneous Events

Events are categorized using the following information:

- Function Type
- Information Number

The IEC60870-5-103 profile in the *Relay Menu Database document*, contains a complete listing of all events produced by the relay.

6.5 General Interrogation (GI)

The General Interrogation (GI) request can be used to read the status of the relay, the function numbers, and information numbers that are returned during the GI cycle. See the IEC60870-5-103 profile in the *Relay Menu Database document*.

6.6 Cyclic Measurements

The relay produces measured values using ASDU 9 cyclically. This can be read from the relay using a Class 2 poll (note ADSU 3 is not used). The rate at which the relay produces new measured values can be controlled using the Measurement Period setting. This setting can be edited from the front panel menu or the front Courier port and is active immediately following a change.

The measurands transmitted by the relay are sent as a proportion of 2.4 times the rated value of the analog value.

6.7 Commands

A list of the supported commands is contained in the *Relay Menu Database document*. The relay responds to other commands with an ASDU 1, with a Cause of Transmission (COT) indicating ‘negative acknowledgement’.

6.8 Test Mode

Using either the front panel menu or the front Courier port, it is possible to disable the relay output contacts to allow secondary injection testing to be performed. This is interpreted as ‘test mode’ by the IEC60870-5-103 standard. An event is produced to indicate both entry to and exit from test mode. Spontaneous events and cyclic measured data transmitted while the relay is in test mode has a COT of ‘test mode’.

6.9 Disturbance Records

For Software Releases prior to B0 (i.e. 57 and earlier):

The disturbance records are stored in uncompressed format and can be extracted using the standard mechanisms described in IEC60870-5-103.

Note	*IEC60870-5-103 only supports up to 8 records.*

For Software Release B0 - A & B:

The disturbance records are stored in uncompressed format and can be extracted using the standard mechanisms described in IEC60870-5-103. The Enhanced Disturbance Recorder software releases mean the relay can store a minimum of 15 records, each of 1.5 seconds duration.

Using relays with IEC 60870-5 CS 103 communication means they can store the same total record length. However, the IEC 60870-5 CS 103 communication protocol dictates that only 8 records (of 3 seconds duration) can be extracted via the rear port.

For Other Software Releases:

The disturbance records are stored in uncompressed format and can be extracted using the standard mechanisms described in IEC60870-5-103.

Where available, the Enhanced Disturbance Recorder software releases mean the relay can store a minimum of 15 records, each of 3.0 seconds duration.

Using relays with IEC 60870-5 CS 103 communication means they can store the same total record length. However, the IEC 60870-5 CS 103 communication protocol dictates that only 8 records (of 3 seconds duration) can be extracted via the rear port.

6.10 Blocking of Monitor Direction

The relay supports a facility to block messages in the Monitor direction and in the Command direction. Messages can be blocked in the Monitor and Command directions using the menu commands, Communications - CS103 Blocking -
Disabled / Monitor Blocking / Command Blocking or DDB signals Monitor Blocked and Command Blocked.

7 DNP3.0 INTERFACE

7.1 DNP3.0 Protocol

The DNP3.0 protocol is defined and administered by the DNP Users Group. For information on the user group, DNP3.0 in general and the protocol specifications, see www.dnp.org

The descriptions given here are intended to accompany the device profile document that is included in the *Relay Menu Database document.* The DNP3.0 protocol is not described here, please refer to the documentation available from the user group. The device profile document specifies the full details of the DNP3.0 implementation for the relay. This is the standard format DNP3.0 document that specifies which objects; variations and qualifiers are supported. The device profile document also specifies what data is available from the relay using DNP3.0. The relay operates as a DNP3.0 slave and supports subset level 2 of the protocol, plus some of the features from level 3.

DNP3.0 communication uses the EIA(RS)-485 communication port at the rear of the relay. The data format is 1 start bit, 8 data bits, an optional parity bit and 1 stop bit. Parity is configurable (see menu settings below).

7.2 DNP3.0 Menu Setting

The following settings are in the DNP3.0 menu in the **Communications** column.

Setting	Range	Description
Remote Address	0 - 65534	DNP3.0 address of relay (decimal)
Baud Rate	1200, 2400, 4800, 9600, 19200, 38400	Selectable baud rate for DNP3.0 communication
Parity	None, Odd, Even	Parity setting
Time Sync.	Enabled, Disabled	Enables or disables the relay requesting time sync. from the master using IIN bit 4 word 1
RP1 Physical Link	Copper or Fiber Optic	This cell defines whether an electrical EIA(RS)485 or fiber optic connection is being used for communication between the master station and relay. If **Fiber Optic** is selected, the optional fiber optic communications board is required.
Meas Scaling	Primary, Secondary or Normalized	Setting to report analog values in terms of primary, secondary or normalized (with respect to the CT/VT ratio setting) values.
Message Gap	0 - 50 msec	Setting to allow the master station to have an interframe gap.
DNP Need Time	1 - 30 mins	The length of time waited before requesting another time sync from the master.
DNP App Fragment	1 - 2048 bytes	The maximum message length (application fragment size) transmitted by the relay.
DNP App Timeout	1 -120 s	The length of time waited after sending a message fragment and waiting for a confirmation from the master.
DNP SBO Timeout	1 - 10 s	The length of time waited after receiving a select command and waiting for an operate confirmation from the master.
DNP Link Timeout	0 - 120 s	The length of time the relay waits for a Data Link Confirm from the master. A value of 0 means data link support disabled and 1 to 120 seconds is the timeout setting.

Table 10 - DNP3.0 menu in the Communications column

If the DNP3.0 over Ethernet option is selected, further settings are shown in this table.

Setting	Range	Description
IP Address	-	Indicates the IP (Internet Protocol) address of the rear Ethernet port. This address is formatted as a six-byte hexadecimal number, and is unique.
Subnet mask	-	Displays the sub-network that the relay is connected to.
NIC MAC Address	-	Indicates the MAC (Media Access Control) address of the rear Ethernet port. This address is formatted as a six-byte hexadecimal number, and is unique.
Gateway	-	Displays the IP address of the gateway (proxy) that the relay is connected to, if any.
DNP Time Sync.	Disabled or Enabled	If set to Enabled the DNP3.0 master station can be used to synchronize the time on the relay. If set to Disabled, either the internal free running clock or the IRIG-B input are used.
Meas Scaling	Primary, Secondary or Normalized	Setting to report analog values in terms of primary, secondary or normalized values, with respect to the CT/VT ratio setting.
NIC Tunl Timeout	1 - 30 mins	Time waited before an inactive tunnel to a master station is reset.
NIC Link Report	Alarm, Event or None	Configures how a failed or unfitted network link (copper or fiber) is reported: Alarm - an alarm is raised for a failed link Event - an event is raised for a failed link None - nothing reported for a failed link
NIC Link Timeout	0.1 - 60 s	Time waited, after failed network link is detected, before communication by the alternative media interface is attempted.

Table 11 - DNP3.0 over Ethernet option settings

7.3 Object 1 Binary Inputs

Object 1, binary inputs, contains information describing the state of signals in the relay, which mostly form part of the Digital Data Bus (DDB). In general these include the state of the output contacts and input optos, alarm signals and protection start and trip signals. The ‘DDB number’ column in the device profile document provides the DDB numbers for the DNP3.0 point data. These can be used to cross-reference to the DDB definition list. See the *Relay Menu Database document*. The binary input points can also be read as change events using object 2 and object 60 for class 1-3 event data.

7.4 Object 10 Binary Outputs

Object 10, binary outputs, contains commands that can be operated using DNP3.0. Therefore the points accept commands of type pulse on [null, trip, close] and latch on/off as detailed in the device profile in the *Relay Menu Database document* and execute the command once for either command. The other fields are ignored (queue, clear, trip/close, in time and off time).

There is an additional image of the control inputs. Described as alias control inputs, they reflect the state of the control input, but with a dynamic nature.

- If the Control Input DDB signal is already SET and a new DNP SET command is sent to the Control Input, the Control Input DDB signal goes momentarily to RESET and then back to SET.
- If the Control Input DDB signal is already RESET and a new DNP RESET command is sent to the Control Input, the Control Input DDB signal goes momentarily to SET and then back to RESET.

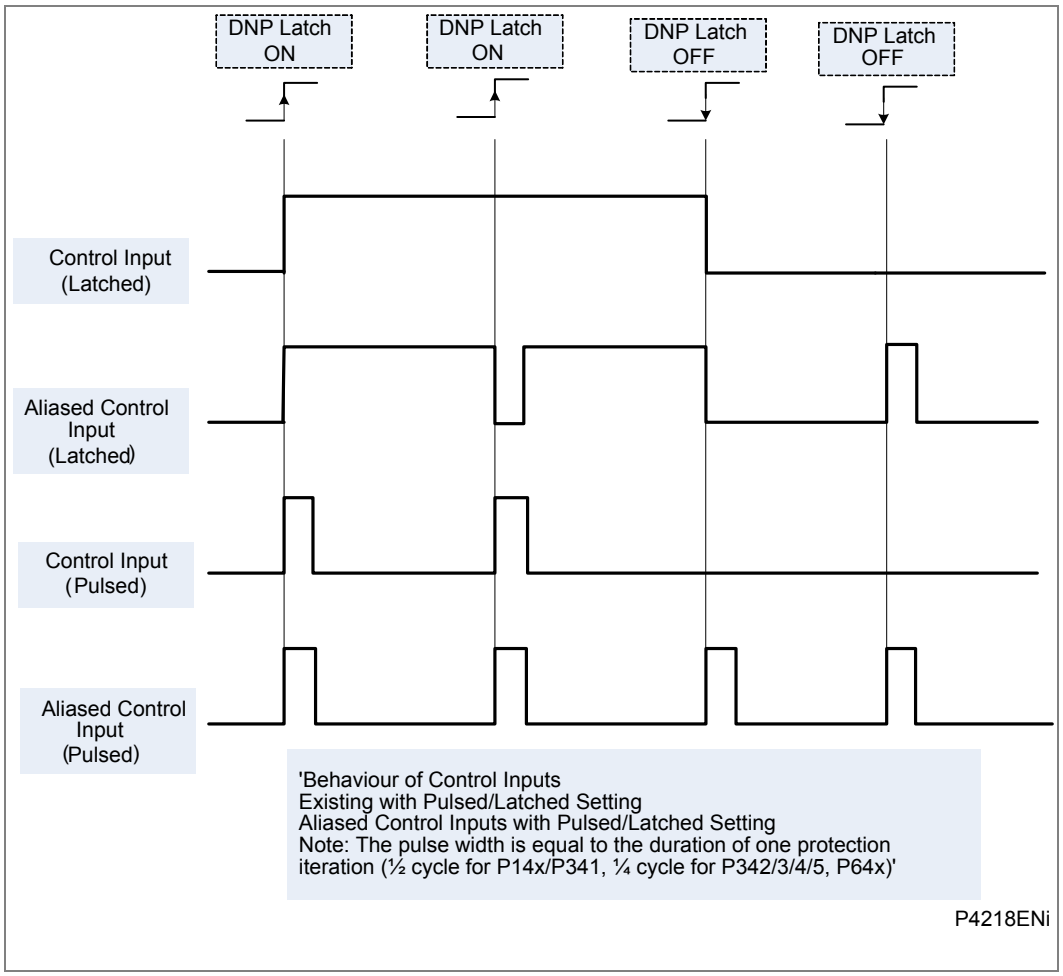

Figure 12 - Behavior when control input is set to pulsed or latched

Many of the relay's functions are configurable so some of the object 10 commands described in the following sections may not be available. A read from object 10 reports the point as off-line and an operate command to object 12 generates an error response.

Examples of object 10 points that maybe reported as off-line are:

- Activate setting groups — Ensure setting groups are enabled
- CB trip/close — Ensure remote CB control is enabled
- Reset NPS thermal — Ensure NPS thermal protection is enabled
- Reset thermal O/L — Ensure thermal overload protection is enabled
- Reset RTD flags — Ensure RTD Inputs is enabled
- Control inputs — Ensure control inputs are enabled

7.5 Object 20 Binary Counters

Object 20, binary counters, contains cumulative counters and measurements. The binary counters can be read as their present 'running' value from object 20, or as a 'frozen' value from object 21. The running counters of object 20 accept the read, freeze and clear functions. The freeze function takes the current value of the object 20 running counter and stores it in the corresponding object 21 frozen counter. The freeze and clear function resets the object 20 running counter to zero after freezing its value.

Binary counter and frozen counter change event values are available for reporting from object 22 and object 23 respectively. Counter change events (object 22) only report the most recent change, so the maximum number of events supported is the same as the total number of counters. Frozen counter change events (object 23) are generated whenever a freeze operation is performed and a change has occurred since the previous freeze command. The frozen counter event queues store the points for up to two freeze operations.

7.6 Object 30 Analog Input

Object 30, analog inputs, contains information from the relay's measurements columns in the menu. All Object 30 points can be reported as 16 or 32-bit integer values with flag, 16 or 32-bit integer values without flag, as well as short floating point values.

Analogue values can be reported to the master station as primary, secondary or normalized values (which takes into account the relay's CT and VT ratios) and this is settable in the DNP3.0 Communications Column in the relay. Corresponding deadband settings can be displayed in terms of a primary, secondary or normalized value. Deadband point values can be reported and written using Object 34 variations.

The deadband is the setting used to determine whether a change event should be generated for each point. The change events can be read using Object 32 or Object 60. These events are generated for any point which has a value changed by more than the deadband setting since the last time the data value was reported.

Any analog measurement that is unavailable when it is read is reported as offline. For example, the frequency when the current and voltage frequency is outside the tracking range of the relay or the thermal state when the thermal protection is disabled in the configuration column. All Object 30 points are reported as secondary values in DNP3.0 (with respect to CT and VT ratios).

7.7 DNP3.0 Configuration using MiCOM S1 Studio

A PC support package for DNP3.0 is available as part of MiCOM S1 Studio to allow configuration of the relay's DNP3.0 response. The PC is connected to the relay using a serial cable to the 9-pin connector on the front of the relay, see the *Introduction* chapter. The configuration data is uploaded from the relay to the PC in a block of compressed format data and downloaded to the relay in a similar manner after modification. The new DNP3.0 configuration takes effect in the relay after the download is complete. To restore the default configuration at any time, from the **Configuration** column, select the **Restore Defaults** cell then select **All Settings**.

In MiCOM S1 Studio, the DNP3.0 data is shown in three main folders, one folder each for the point configuration, integer scaling and default variation (data format). The point configuration also includes screens for binary inputs, binary outputs, counters and analogue input configuration.

7.7.1 Object 1

For every point included in the device profile document there is a check box for membership of class 0 and radio buttons for class 1, 2 or 3 membership. Any point that is in class 0 must be a member of one of the change event classes 1, 2 or 3.

Points that are configured out of class 0 are by default not capable of generating change events. Furthermore, points that are not part of class 0 are effectively removed from the DNP3.0 response by renumbering the points that are in class 0 into a contiguous list starting at point number 0. The renumbered point numbers are shown at the left-hand side of the screen in S1 and can be printed out to form a revised device profile for the relay. This mechanism allows best use of available bandwidth by only reporting the data points required by the user when a poll for all points is made.

7.7.2 Object 20

The running counter value of object 20 points can be configured to be in or out of class 0. Any running counter that is in class 0 can have its frozen value selected to be in or out of the DNP3.0 response, but a frozen counter cannot be included without the corresponding running counter. As with object 1, the class 0 response will be renumbered into a contiguous list of points based on the selection of running counters. The frozen counters will also be renumbered based on the selection; note that if some of the counters that are selected as running are not also selected as frozen then the renumbering will result in the frozen counters having different point numbers to their running counterparts. For example, object 20 point 3 (running counter) might have its frozen value reported as object 21 point 1.

7.7.3 Object 30

For the analog inputs, object 30, the same selection options for classes 0, 1, 2 and 3 are available as for object 1. In addition to these options, which behave in exactly the same way as for object 1, it is possible to change the deadband setting for each point. The minimum and maximum values and the resolution of the deadband settings are defined in the device profile document; MiCOM S1 will allow the deadband to be set to any value within these constraints.

8 IEC 61850 ETHERNET INTERFACE

8.1 Introduction

IEC 61850 is the international standard for Ethernet-based communication in substations. It enables integration of all protection, control, measurement and monitoring functions in a substation, and provides the means for interlocking and inter-tripping. It combines the convenience of Ethernet with the security which is essential in substations today.

The MiCOM protection relays can integrate with the PACiS substation control systems, to complete Schneider Electric's offer of a full IEC 61850 solution for the substation. The majority of MiCOM Px3x and Px4x relay types can be supplied with Ethernet, in addition to traditional serial protocols. Relays which have already been delivered with UCA2.0 on Ethernet can be easily upgraded to IEC 61850.

8.2 What is IEC 61850?

IEC 61850 is a 14-part international standard, which defines a communication architecture for substations. It is more than just a protocol and provides:

- Standardized models for IEDs and other equipment in the substation
- Standardized communication services (the methods used to access and exchange data)
- Standardized formats for configuration files
- Peer-to-peer (for example, relay to relay) communication

The standard includes mapping of data onto Ethernet. Using Ethernet in the substation offers many advantages, most significantly including:

- High-speed data rates (currently 100 Mbits/s, rather than tens of kbits/s or less used by most serial protocols)
- Multiple masters (called “clients”)
- Ethernet is an open standard in every-day use

Schneider Electric has been involved in the Working Groups which formed the standard, building on experience gained with UCA2.0, the predecessor of IEC 61850.

8.2.1 Interoperability

A major benefit of IEC 61850 is interoperability. IEC 61850 standardizes the data model of substation IEDs which simplifies integration of different vendors’ products. Data is accessed in the same way in all IEDs, regardless of the vendor, even though the protection algorithms of different vendors’ relays may be different.

IEC 61850-compliant devices are not interchangeable, you cannot replace one device with another (although they are interoperable). However, the terminology is predefined and anyone with knowledge of IEC 61850 can quickly integrate a new device without mapping all of the new data. IEC 61850 improves substation communications and interoperability at a lower cost to the end user.

8.2.2 Data Model

To ease understanding, the data model of any IEC 61850 IED can be viewed as a hierarchy of information. The categories and naming of this information is standardized in the IEC 61850 specification.

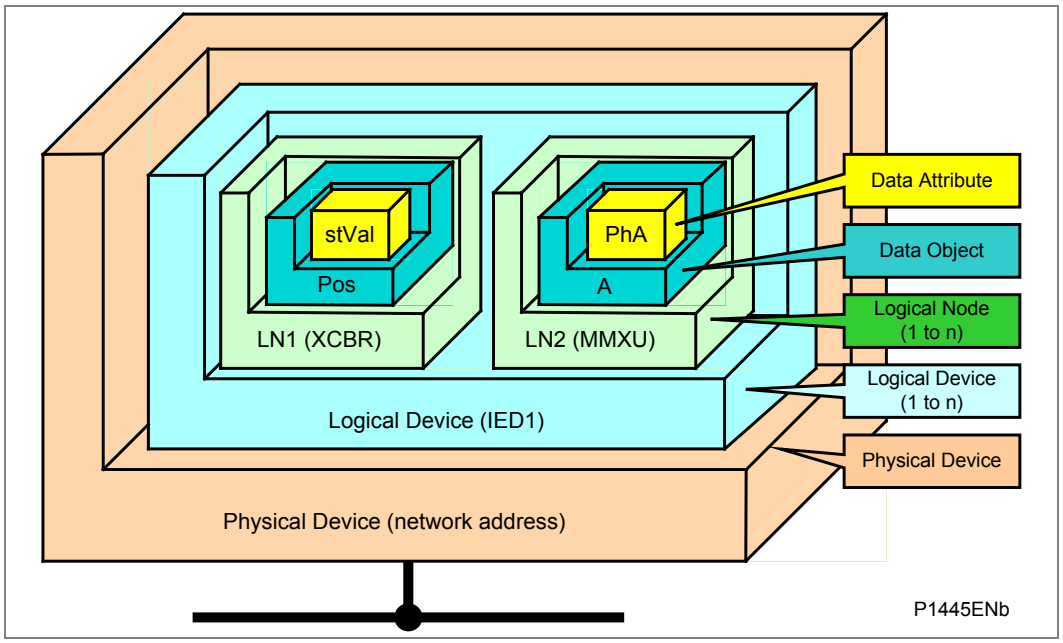

Figure 13 - Data model layers in IEC 61850

The levels of this hierarchy can be described as follows:

- Physical Device — Identifies the actual IED in a system. Typically the device's name or IP address can be used (for example **Feeder_1** or **10.0.0.2**).
- Logical Device — Identifies groups of related Logical Nodes inthe Physical Device. For the MiCOM relays, five Logical Devices exist: **Control, Measurements, Protection, Records, System**.
- Wrapper/Logical Node Instance — Identifies the major functional areas in the IEC 61850 data model. Either 3 or 6 characters are used as a prefix to define the functional group (wrapper) while the actual functionality is identified by a 4 character Logical Node name, suffixed by an instance number. For example, XCBR1 (circuit breaker), MMXU1 (measurements), FrqPTOF2 (overfrequency protection, stage 2).
- Data Object — This next layer is used to identify the type of data presented. For example, **Pos** (position) of Logical Node type **XCBR**.
- Data Attribute — This is the actual data (such as measurement value, status, and description). For example, **stVal** (status value) indicates the actual position of the circuit breaker for Data Object type **Pos** of Logical Node type **XCBR**.

8.3 IEC 61850 in MiCOM Relays

IEC 61850 is implemented in MiCOM relays by use of a separate Ethernet card. This card manages the majority of the IEC 61850 implementation and data transfer to avoid any impact on the performance of the protection.

To communicate with an IEC 61850 IED on Ethernet, it is necessary only to know its IP address. This can then be configured into either:

- An IEC 61850 client (or master), for example a PACiS computer (MiCOM C264) or HMI, or
- An MMS browser, with which the full data model can be retrieved from the IED, without any prior knowledge

8.3.1 Capability

The IEC 61850 interface provides these capabilities:

- Read access to measurements
  All measurands are presented using the measurement Logical Nodes, in the 'Measurements' Logical Device. Reported measurement values are refreshed by the relay once per second, in line with the relay user interface.
- Generation of unbuffered reports on change of status/measurement
  Unbuffered reports, when enabled, report any change of state in statuses and measurements (according to deadband settings).
- Support for time synchronization over an Ethernet link
  Time synchronization is supported using SNTP (Simple Network Time Protocol). This protocol is used to synchronize the internal real time clock of the relays.
- GOOSE peer-to-peer communication
  GOOSE communications of statuses are included as part of the IEC 61850 implementation. See *Peer-to-Peer (GSE) Communications* for more details.
- Disturbance record extraction
  Disturbance records can be extracted from MiCOM relays by file transfer, as ASCII format COMTRADE files.
- Controls
  The following control services are available:
  - Direct Control
  - Direct Control with enhanced security
  - Select Before Operate (SBO) with enhanced security
  - Controls are applied to open and close circuit breakers using XCBR.Pos and DDB signals 'Control Trip' and 'Control Close'.
  - System/LLN0. LLN0.LEDRs are used to reset any trip LED indications.
- Reports
  Reports only include data objects that have changed and not the complete dataset. The exceptions to this are a General Interrogation request and integrity reports.
- Buffered Reports
  Eight Buffered Report Control Blocks, (BRCB), are provided in SYSTEM/LLN0 in Logical Device 'System'.
  Buffered reports are configurable to use any configurable dataset located in the same Logical device as the BRCB (SYSTEM/LLN0).
- Unbuffered Reports
  Sixteen Unbuffered Report Control Blocks (URCB) are provided in SYSTEM/LLN0 in Logical Device 'System'.
  Unbuffered reports are configurable to use any configurable dataset located in the same Logical device as the URCB (SYSTEM/LLN0).

- Configurable Data Sets
  It is possible to create and configure datasets in any Logical Node using the IED Configurator. The maximum number of datasets will be specified in an IED's ICD file. An IED is capable of handling 100 datasets.
- Published GOOSE message
  Eight GOCBs are provided in SYSTEM/LLN0.
- Uniqueness of control
  The Uniqueness of control mechanism is implemented to be consistent with the PACiS mechanism. This requires the relay to subscribe to the OrdRun signal from all devices in the system and be able to publish such a signal in a GOOSE message.
- Select Active Setting Group
  Functional protection groups can be enabled or disabled using private mod/beh attributes in the Protection/LLN0.OcpMod object. Setting groups are selectable using the Setting Group Control Block class, (SGCB). The Active Setting Group can be selected using the System/LLN0.SP.SGCB.ActSG data attribute in Logical Device 'System'.
- Quality for GOOSE
  It is possible to process the quality attributes of any Data Object in an incoming GOOSE message. Devices that do not support IEC61850 quality flags send quality attributes as all zeros. The supported quality attributes for outgoing GOOSE messages are described in the Protocol Implementation eXtra Information for Testing (PIXIT) document.
- Address List
  An Address List document (to be titled ADL) is produced for each IED which shows the mapping between the IEC61850 data model and the internal data model of the IED. It includes a mapping in the reverse direction, which may be more useful. This document is separate from the PICS/MICS document.
- Originator of Control
  Originator of control mechanism is implemented for operate response message and in the data model on the ST of the related control object, consistent with the PACiS mechanism.
- Metering
  MMTR (metering) logical node is implemented in P14x products. All metered values in the MMTR logical node are of type BCR. The actVal attribute of the BCR class is of type INT128, but this type is not supported by the SISCO MMSLite library. Instead, an INT64 value will be encoded for transmission.
  A SPC data object named MTTRs has been included in the MMTR logical node. This control will reset the demand measurements. A SPC data object named MTTRs is also included in the PTTR logical node. This control will reset the thermal measurements.
- Scaled Measurements
  The Unit definition, as per IEC specifies an SI unit and an optional multiplier for each measurement. This allows a magnitude of measurement to be specified e.g. mA, A, kA, MA.

The multiplier will always be included in the Unit definition and will be configurable in SCL, but not settable at runtime. It will apply to the magnitude, rangeC.min & rangeC.max attributes. rangeC.min & rangeC.max will not be settable at runtime to be more consistent with Px30 and to reduce configuration problems regarding deadbands.

Setting changes, such as changes to protection settings, are done using MiCOM S1 Studio. These changes can also be done using the relay's front port serial connection or the relay's Ethernet link, and is known as "tunneling".

8.3.2 IEC 61850 Configuration

One of the main objectives of IEC 61850 is to allow IEDs to be directly configured from a configuration file generated at system configuration time. At the system configuration level, the capabilities of the IED are determined from an IED capability description file (ICD), which is provided with the product. Using a collection of these ICD files from different products, the entire protection of a substation can be designed, configured and tested (using simulation tools) before the product is even installed into the substation.

To help this process, the MiCOM S1 Studio Support Software provides an IEC61850 IED Configurator tool. Select **Tools > IEC61850 IED Configurator**. This tool allows the preconfigured IEC 61850 configuration file (SCD or CID) to be imported and transferred to the IED. The configuration files for MiCOM relays can also be created manually, based on their original IED Capability Description (ICD) file.

Other features include the extraction of configuration data for viewing and editing, and a sophisticated error-checking sequence. The error checking ensures the configuration data is valid for sending to the IED and ensures the IED functions correctly in the substation.

To help the user, some configuration data is available in the **IED CONFIGURATOR** column of the relay user interface, allowing read-only access to basic configuration data.

8.3.2.1 Configuration Banks

To promote version management and minimize down-time during system upgrades and maintenance, the MiCOM relays have incorporated a mechanism consisting of multiple configuration banks. These configuration banks are categorized as:

- Active Configuration Bank
- Inactive Configuration Bank

Any new configuration sent to the relay is automatically stored in the inactive configuration bank, therefore not immediately affecting the current configuration. Both active and inactive configuration banks can be extracted at any time.

When the upgrade or maintenance stage is complete, the IED Configurator tool can be used to transmit a command to a single IED. This command authorizes the activation of the new configuration contained in the inactive configuration bank, by switching the active and inactive configuration banks. This technique ensures that the system down-time is minimized to the start-up time of the new configuration. The capability to switch the configuration banks is also available using the **IED CONFIGURATOR** column.

For version management, data is available in the **IED CONFIGURATOR** column in the relay user interface, displaying the SCL Name and Revision attributes of both configuration banks.

8.3.2.2 Network Connectivity

Note	*This section presumes a prior knowledge of IP addressing and related topics. Further details on this topic may be found on the Internet (search for IP Configuration) and in numerous relevant books.*

Configuration of the relay IP parameters (IP Address, Subnet Mask, Gateway) and SNTP time synchronization parameters (SNTP Server 1, SNTP Server 2) is performed by the IED Configurator tool. If these parameters are not available using an SCL file, they must be configured manually.

If the assigned IP address is duplicated elsewhere on the same network, the remote communications do not operate in a fixed way. However, the relay checks for a conflict at power up and every time the IP configuration is changed. An alarm is raised if an IP conflict is detected.

Use the **Gateway** setting to configure the relay to accept data from networks other than the local network.

8.4 Data Model of MiCOM Relays

The data model naming adopted in the Px30 and Px40 relays has been standardized for consistency. The Logical Nodes are allocated to one of the five Logical Devices, as appropriate, and the wrapper names used to instantiate Logical Nodes are consistent between Px30 and Px40 relays.

The data model is described in the Model Implementation Conformance Statement (MICS) document, which is available separately. The MICS document provides lists of Logical Device definitions, Logical Node definitions, Common Data Class and Attribute definitions, Enumeration definitions, and MMS data type conversions. It generally follows the format used in Parts 7-3 and 7-4 of the IEC 61850 standard.

8.5 Communication Services of MiCOM Relays

The IEC 61850 communication services which are implemented in the Px30 and Px40 relays are described in the Protocol Implementation Conformance Statement (PICS) document, which is available separately. The PICS document provides the Abstract Communication Service Interface (ACSI) conformance statements as defined in Annex A of Part 7-2 of the IEC 61850 standard.

8.6 Peer-to-Peer (GSE) Communications

The implementation of IEC 61850 Generic Substation Event (GSE) sets the way for cheaper and faster inter-relay communications. The generic substation event model provides fast and reliable system-wide distribution of input and output data values. The generic substation event model is based on autonomous decentralization This provides an efficient method of allowing simultaneous delivery of the same generic substation event information to more than one physical device, by using multicast services.

The use of multicast messaging means that IEC 61850 GOOSE uses a publisher-subscriber system to transfer information around the network*. When a device detects a change in one of its monitored status points, it publishes (sends) a new message. Any device that is interested in the information subscribes (listens) to the data message.

*Note**	*Multicast messages cannot be routed across networks without specialized equipment.*

Each new message is retransmitted at user-configurable intervals until the maximum interval is reached, to overcome possible corruption due to interference and collisions. In practice, the parameters which control the message transmission cannot be calculated. Time must be allocated to the testing of GSE schemes before or during commissioning; in just the same way a hardwired scheme must be tested.

8.6.1 Scope

A maximum of 64 virtual inputs are available within the PSL which can be mapped directly to a published dataset in a GOOSE message (Configurable dataset is supported).

Each GOOSE signal contained in a subscribed GOOSE message can be mapped to any of the 64 virtual inputs in the PSL. The virtual inputs allow the mapping to internal logic functions for protection control, directly to output contacts or LEDs for monitoring.

The MiCOM relay can subscribe to all GOOSE messages but only the following data types can be decoded and mapped to a virtual input:

- BOOLEAN
- BSTR2
- INT16
- INT32
- INT8
- UINT16
- UINT32
- UINT8

The MiCOM relay also can subscribe analogue GOOSE messages with Float32 data type. The received analogue values can not apply to any application function, these values will be stored only on the IEC 61850 data mode.

8.6.2 Simulation GOOSE Configuration

From MiCOM S1 Studio select Tools > IEC 61850 IED Configurator (Ed.2). Make sure the configuration is correct as this ensures efficient GOOSE scheme operation.

The relay can be set to publish/subscribe simulation/test GOOSE; it is important that this setting is returned to publish/receive normal GOOSE messages after testing to permit normal operation of the application and GOOSE messaging.

The relay provides a single setting to receive Simulated GOOSE, however it manages each subscribed GOOSE signal independently when the setting is set to simulated GOOSE. Each subscription (virtual input) will continue to respond to GOOSE messages without the simulation flag set; however once the relay receives a GOOSE for a subscription with the simulation flag set, it will respond to this and ignore messages without the simulation flag set. Other subscriptions (virtual inputs) which have not received a GOOSE message with the simulation flag will continue to operate as before. When the setting is reset back to normal GOOSE messaging the relay will ignore all GOOSE messages with the simulation flag set and act on GOOSE messages without the simulation flag.

WARNING **If you set the GOOSE in Simulation Mode, you MUST set it back to normal GOOSE after testing.**
IT IS POTENTIALLY EXTREMELY UNSAFE TO ATTEMPT TO USE ANY RELAY WHICH IS STILL IN GOOSE SIMULATION MODE.

8.6.3 High Performance GOOSE

In addition, the Px40 device is designed to provide maximum performance through an optimized publishing mechanism. This optimized mechanism is enabled so that the published GOOSE message is mapped using only the data attributes rather than mapping a complete data object. If data objects are mapped, the GOOSE messaging will operate correctly; but without the benefit of the optimized mechanism.

A pre-configured dataset named as "HighPerformGOOSE" is available in Ed.2 ICD template, which include all data attributes of all virtual outputs. We recommend using this dataset to get the benefit of better GOOSE performance. The optimized mechanism also applies to Ed.1 but without such a pre-configured dataset.

8.7 Ethernet Functionality

Settings relating to a failed Ethernet link are available in the ‘COMMUNICATIONS’ column of the relay user interface.

8.7.1 Ethernet Disconnection

IEC 61850 ‘Associations’ are unique and made to the relay between the client (master) and server (IEC 61850 device). If the Ethernet is disconnected, such associations are lost and must be re-established by the client. The TCP_KEEPALIVE function is implemented in the relay to monitor each association and terminate any which are no longer active.

8.7.2 Redundant Ethernet Communication Ports (optional)

For information regarding the Redundant Ethernet communication ports, refer to the stand alone document *Px4x/EN REB/B11*.

8.7.3 Loss of Power

If the relay's power is removed, the relay allows the client to re-establish associations without a negative impact on the relay's operation. As the relay acts as a server in this process, the client must request the association. Uncommitted settings are cancelled when power is lost. Reports requested by connected clients are reset and must be re-enabled by the client when the client next creates the new association to the relay.

Notes:

INSTALLATION

CHAPTER 16

Date (month/year):	08/2014	
Products covered by this chapter:	This chapter covers the specific versions of the MiCOM products listed below. This includes ***only*** the following combinations of Software Version and Hardware Suffix.	
Hardware suffix:	J & K & L & M P14x J P241 J P242 K P243 K P342 J P343 K P344 K P345 K P44x J / K P44y K / M	 P445 J / L P54x K / M P547 K P642 J / L P643 K / M P645 K / M P74x J / K P746 K P841 K P849 K
Software version:	All MiCOM Px4x products	
Connection diagrams:	10P141xx (xx = 01 to 07) 10P142xx (xx = 01 to 07) 10P143xx (xx = 01 to 07) 10P145xx (xx = 01 to 07) 10P241xx (xx = 01 to 02) 10P242xx (xx = 01) 10P243xx (xx = 01) 10P342xx (xx = 01 to 17) 10P343xx (xx = 01 to 19) 10P344xx (xx = 01 to 12) 10P345xx (xx = 01 to 07) 10P391xx (xx = 01 to 02) 10P44303 (SH 01 and 03) 10P44304 (SH 01 and 03) 10P44305 (SH 01 and 03) 10P44306 (SH 01 and 03) 10P445xx (xx = 01 to 04) 10P44600 10P44601 (SH 01 and 03) 10P44602 (SH 01 and 03) 10P44603 (SH 01 and 03) 10P54302 (SH 01 to 02) 10P54303 (SH 01 to 02)	10P54400 10P54404 (SH 01 to 02) 10P54405 (SH 01 to 02) 10P54502 (SH 01 to 02) 10P54503 (SH 01 to 02) 10P54600 10P54604 (SH 01 to 02) 10P54605 (SH 01 to 02) 10P54606 (SH 01 to 02) 10P54702xx (Sh 1 to 2) 10P54703xx (Sh 1 to 2) 10P54704xx (Sh 1 to 2) 10P54705xx (Sh 1 to 2) 10P642xx (xx = 01 to 10) 10P643xx (xx = 01 to 06) 10P645xx (xx = 01 to 09) 10P740xx (xx = 01 to 07) 10P746xx (xx = 01 to 07) 10P84100 10P84101 (Sh 1 to 2) 10P84102 (Sh 1 to 2) 10P84103 (Sh 1 to 2) 10P84104 (Sh 1 to 2) 10P84105 (Sh 1 to 2) 10P849xx (xx = 01 to 06)

CONTENTS

TABLES

FIGURES

1 INTRODUCTION TO MICOM RANGE

About MiCOM Range

MiCOM is a comprehensive solution capable of meeting all electricity supply requirements. It comprises a range of components, systems and services from Schneider Electric.

Central to the MiCOM concept is flexibility. MiCOM provides the ability to define an application solution and, through extensive communication capabilities, integrate it with your power supply control system.

The components within MiCOM are:

- P range protection relays;
- C range control products;
- M range measurement products for accurate metering and monitoring;
- S range versatile PC support and substation control packages.

MiCOM products include extensive facilities for recording information on the state and behaviour of the power system using disturbance and fault records. They can also provide measurements of the system at regular intervals to a control centre enabling remote monitoring and control to take place.

For up-to-date information, please see:

www.schneider-electric.com

MiCOM Px4x Products

The MiCOM Px4x series of protection devices provide a wide range of protection and control functions and meet the requirements of a wide market segment.

Different parts of the Px4x range provide different functions. These include:

- **P14x** **Feeder Management** relay suitable for MV and HV systems
- **P24x** **Motors** and rotating machine management relay for use on a wide range of synchronous and induction machines
- **P34x** **Generator Protection** for small to sophisticated generator systems and interconnection protection
- **P44x** Full scheme **Distance Protection** relays for MV, HV and EHV systems
- **P54x** **Line Differential** protection relays for HV/EHV systems with multiple communication options and phase comparison protection for use with PLC
- **P74x** **Numerical Busbar Protection** for use on MV, HV and EHV busbars
- **P84x** **Breaker Failure** protection relays

Note	*During 2011, the International Electrotechnical Commission classified the voltages into different levels (IEC 60038). The IEC defined LV, MV, HV and EHV as follows: LV is up to 1000V. MV is from 1000V up to 35 kV. HV is from 110 kV or 230 kV. EHV is above 230 KV.* *There is still ambiguity about where each band starts and ends. A voltage level defined as LV in one country or sector, may be described as MV in a different country or sector. Accordingly, LV, MV, HV and EHV suggests a possible range, rather than a fixed band. Please refer to your local Schneider Electric office for more guidance.*

2 RECEIPT, HANDLING, STORAGE AND UNPACKING RELAYS

2.1 Receipt of Relays

Protective relays, although generally of robust construction, require careful treatment prior to installation on site.

Upon receipt, relays should be examined immediately to ensure no external damage has been sustained in transit. If damage has been sustained, a claim should be made to the transport contractor and Schneider Electric should be promptly notified.

Relays that are supplied unmounted and not intended for immediate installation should be returned to their protective polythene bags and delivery carton. Section 2.3 gives more information about the storage of relays.

2.2 Handling of Electronic Equipment

Warning **Before carrying out any work on the equipment, you should be familiar with the contents of the Safety Information chapter/safety guide SFTY/4LM/C11 or later issue, the Technical Data chapter and the ratings on the equipment rating label.**

A person's normal movements can easily generate electrostatic potentials of several thousand volts. Discharge of these voltages into semiconductor devices when handling electronic circuits can cause serious damage which, although not always immediately apparent, will reduce the reliability of the circuit. This is particularly important to consider where the circuits use Complementary Metal Oxide Semiconductors (CMOS), as is the case with these relays.

The relay's electronic circuits are protected from electrostatic discharge when housed in the case. Do not expose them to risk by removing the front panel or Printed Circuit Boards (PCBs) unnecessarily.

Each PCB incorporates the highest practicable protection for its semiconductor devices. However, if it becomes necessary to remove a PCB, the following precautions should be taken to preserve the high reliability and long life for which the relay has been designed and manufactured.

- Before removing a PCB, ensure that you are at the same electrostatic potential as the equipment by touching the case.
- Handle analogue input modules by the front panel, frame or edges of the circuit boards. PCBs should only be handled by their edges. Avoid touching the electronic components, printed circuit tracks or connectors.
- Do not pass the module to another person without first ensuring you are both at the same electrostatic potential. Shaking hands achieves equipotential.
- Place the module on an anti-static surface, or on a conducting surface which is at the same potential as yourself.
- If it is necessary to store or transport printed circuit boards removed from the case, place them individually in electrically conducting anti-static bags.

In the unlikely event that you are making measurements on the internal electronic circuitry of a relay in service, it is preferable that you are earthed to the case with a

conductive wrist strap. Wrist straps should have a resistance to ground between 500kΩ to 10MΩ. If a wrist strap is not available you should maintain regular contact with the case to prevent a build-up of electrostatic potential. Instrumentation which may be used for making measurements should also be earthed to the case whenever possible.

More information on safe working procedures for all electronic equipment can be found in IEC 61340-5-1. It is strongly recommended that detailed investigations on electronic circuitry or modification work should be carried out in a special handling area such as described in the aforementioned Standard document.

2.3 Storage

If relays are not to be installed immediately upon receipt, they should be stored in a place free from dust and moisture in their original cartons. Where de-humidifier bags have been included in the packing they should be retained. The action of the de-humidifier crystals will be impaired if the bag is exposed to ambient conditions and may be restored by gently heating the bag for about an hour prior to replacing it in the carton.

To prevent battery drain during transportation and storage a battery isolation strip is fitted during manufacture. With the lower access cover open, presence of the battery isolation strip can be checked by a red tab protruding from the positive side.

Care should be taken on subsequent unpacking that any dust which has collected on the carton does not fall inside. In locations of high humidity the carton and packing may become impregnated with moisture and the de-humidifier crystals will lose their efficiency.

Prior to installation, relays should be stored at a temperature of between -40°C to +70°C (-13°F to +158°F).

2.4 Unpacking

Care must be taken when unpacking and installing the relays so that none of the parts are damaged and additional components are not accidentally left in the packing or lost. Make sure that any user's CDROM or technical documentation is NOT discarded, and accompanies the relay to its destination substation.

Note	*With the lower access cover open, the red tab of the battery isolation strip will be seen protruding from the positive side of the battery compartment. Do not remove this strip because it prevents battery drain during transportation and storage and will be removed as part of the commissioning tests.*

Relays must only be handled by skilled persons.

The site should be well lit to facilitate inspection, clean, dry and reasonably free from dust and excessive vibration. This particularly applies to installations which are being carried out at the same time as construction work.

3 RELAY MOUNTING

MiCOM relays are dispatched either individually or as part of a panel/rack assembly.

Individual relays are normally supplied with an outline diagram showing the dimensions for panel cut-outs and hole centres. This information can also be found in the product publication.

Secondary front covers can also be supplied as an option item to prevent unauthorised changing of settings and alarm status. They are available in sizes 40TE and 60TE. The 60TE cover also fits the 80TE case size of the relay.

Product	Size	Part No
P14x	40TE 60TE / 80TE	GN0037 001 GN0038 001
P24xxxxxxxxxxxA P24xxxxxxxxxxxC	40TE 60TE / 80TE	GN0037 001 GN0038 001
P24xxxxxxxxxxxJ P24xxxxxxxxxxxK	40TE 60TE / 80TE	GN0242 001 GN0243 001
P34xxxxxxxxxxxA P34xxxxxxxxxxxC	40TE 60TE / 80TE	GN0037 001 GN0038 001
P34xxxxxxxxxxxJ P34xxxxxxxxxxxK	40TE 60TE / 80TE	GN0242 001 GN0243 001
P44x	40TE 60TE / 80TE	GN0037 001 GN0038 001
P44y	60TE / 80TE	GN0038 001
P445	40TE 60TE / 80TE	GN0037001 GN0038 001
P54x	60TE / 80TE	GN0038 001
P547	60TE / 80TE	GN0038 001
P64xxxxxxxxxxxA/B/C	40TE 60TE / 80TE	GN0037 001 GN0038 001
P64xxxxxxxxxxxJ/K	40TE 60TE / 80TE	GN0242 001 GN0243 001
P74x P74x	40TE 60TE	GN0037 001 GN0038 001
P746	40TE 60TE	GN0037 001 GN0038 001
P841	60TE / 80TE	GN0038 001
P849	40TE 60TE / 80TE	GN0037 001 GN0038 001

Note *The Part Numbers suitable for rack-mounting have an "N" as the 10th digit.*
The Part Numbers suitable for panel-mounting have an "M" as the 10th digit.

Table 1 – Products, sizes and part numbers

The design of the relay is such that the fixing holes in the mounting flanges are only accessible when the access covers are open and hidden from sight when the covers are closed.

If a P991 or MMLG test block is to be included with the relays, we recommend that you position the test block on the right-hand side of the associated relays (when viewed from the front). This minimises the wiring between the relay and test block, and allows the correct test block to be easily identified during commissioning and maintenance tests.

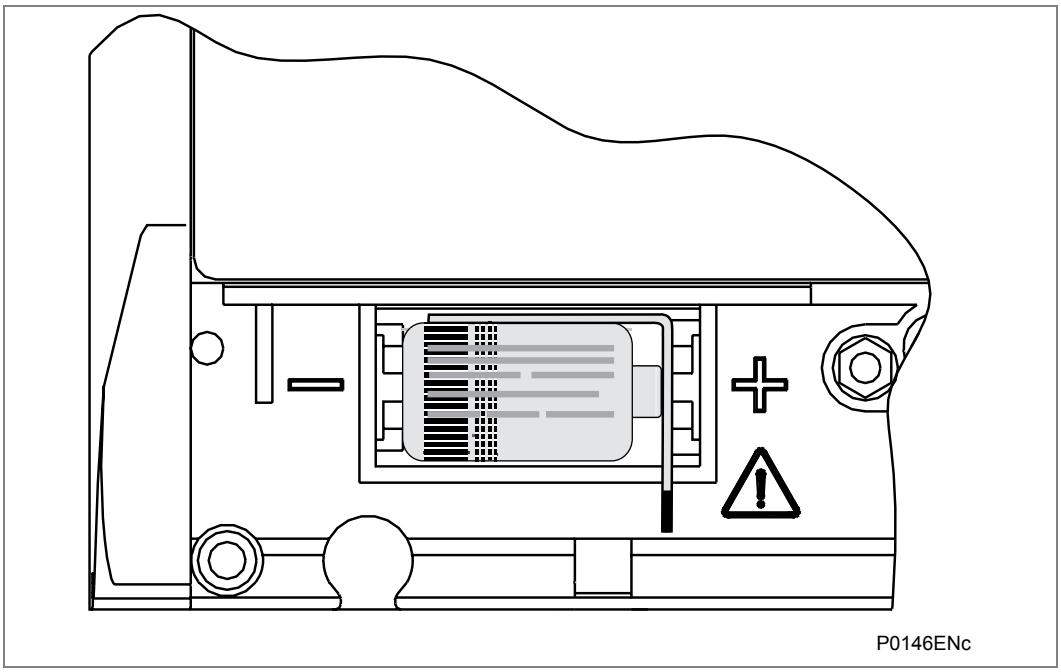

Figure 1 - Location of battery isolation strip

If you need to test correct relay operation during the installation, the battery isolation strip can be removed but should be replaced if commissioning of the scheme is not imminent. This will prevent unnecessary battery drain during transportation to site and installation. The red tab of the isolation strip can be seen protruding from the positive side of the battery compartment when the lower access cover is open. To remove the isolation strip, pull the red tab whilst lightly pressing the battery to prevent it falling out of the compartment. When replacing the battery isolation strip, ensure that the strip is refitted as shown in Figure 1, i.e. with the strip behind the battery with the red tab protruding.

3.1 Rack Mounting

Virtually all MiCOM relays (apart from P445) can be rack mounted using single tier rack frames (part number FX0021 101), see Figure 2. These frames have dimensions in accordance with IEC 60297 and are supplied pre-assembled ready to use. On a standard 483 mm rack this enables combinations of case widths up to a total equivalent of size 80TE to be mounted side-by-side.

The two horizontal rails of the rack frame have holes drilled at approximately 26 mm intervals and the relays are attached via their mounting flanges using M4 Taptite self-tapping screws with captive 3 mm thick washers (also known as a SEMS unit). These fastenings are available in packs of 5 (part number ZA0005 104).

Note	*Conventional self-tapping screws, including those supplied for mounting MiDOS relays, have marginally larger heads which can damage the front cover molding if used.*

Warning **Risk of damage to the front cover moulding. Do not use conventional self-tapping screws, including those supplied for mounting MiDOS relays because they have slightly larger heads.**

Once the tier is complete, the frames are fastened into the racks using mounting angles at each end of the tier.

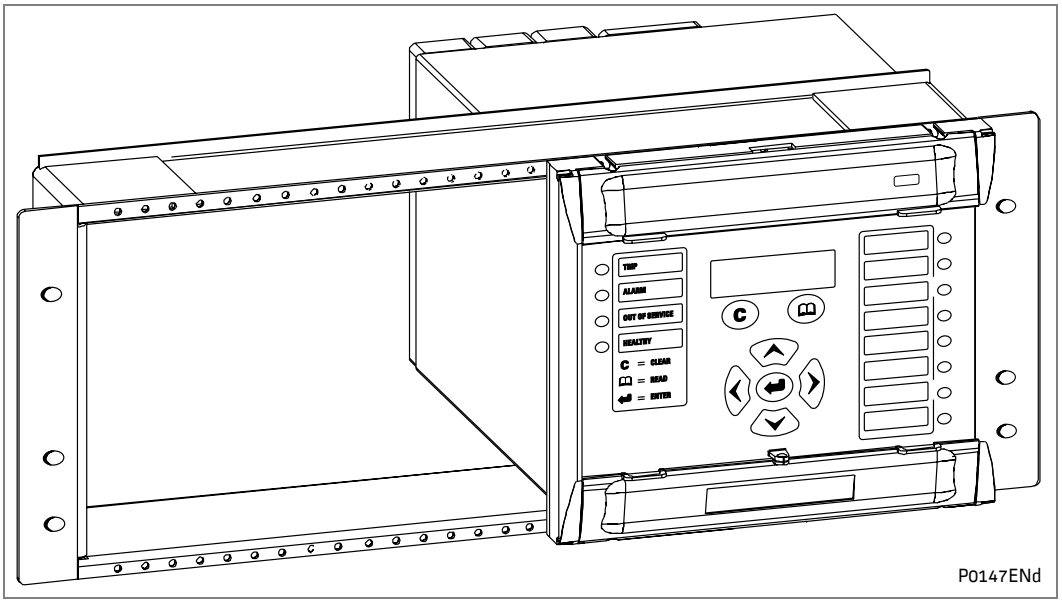

Figure 2 - Rack mounting of relays

Relays can be mechanically grouped into single tier (4U) or multi-tier arrangements by the rack frame. This enables schemes using products from the MiCOM and MiDOS product ranges to be pre-wired together prior to mounting.

Use blanking plates if there are empty spaces. The spaces may be for future installation of relays or because the total size is less than 80TE on any tier. Blanking plates can also be used to mount ancillary components. Table 2 shows the sizes that can be ordered.

Note *Blanking plates are only available in black.*

Further details on mounting MiDOS relays can be found in publication R7012, “MiDOS Parts Catalogue and Assembly Instructions”.

Case size summation	Blanking plate part number
5TE	GJ2028 101
10TE	GJ2028 102
15TE	GJ2028 103
20TE	GJ2028 104
25TE	GJ2028 105
30TE	GJ2028 106
35TE	GJ2028 107
40TE	GJ2028 108

Table 2 - Blanking plates

3.2 Panel Mounting

The relays can be flush mounted into panels using M4 SEMS Taptite self-tapping screws with captive 3 mm thick washers (also known as a SEMS unit). These fastenings are available in packs of 5 (part number ZA0005 104).

Note	*Conventional self-tapping screws, including those supplied for mounting MiDOS relays, have marginally larger heads which can damage the front cover molding if used.*

Warning	**Risk of damage to the front cover molding. Do not use conventional self-tapping screws, including those supplied for mounting MiDOS relays because they have slightly larger heads.**

Alternatively tapped holes can be used if the panel has a minimum thickness of 2.5 mm.

For applications where relays need to be semi-projection or projection mounted, a range of collars are available from the Schneider Electric Contracts Department.

If several relays are mounted in a single cut-out in the panel, mechanically group them together horizontally or vertically to form rigid assemblies prior to mounting in the panel.

Note	*Fastening MiCOM relays with pop rivets is not advised because this does not allow easy removal if repair is necessary.*

Rack-mounting panel-mounted versions: it is possible to rack-mount some relay versions which have been designed to be panel-mounted. The relay is mounted on a single-tier rack frame, which occupies the full width of the rack. To make sure a panel-mounted relay assembly complies with BS EN60529 IP52, fit a metallic sealing strip between adjoining relays (Part No GN2044 001) and a sealing ring from Table 3 around the complete assembly.

Width	Single tier	Double tier
10TE	GJ9018 002	GJ9018 018
15TE	GJ9018 003	GJ9018 019
20TE	GJ9018 004	GJ9018 020
25TE	GJ9018 005	GJ9018 021
30TE	GJ9018 006	GJ9018 022
35TE	GJ9018 007	GJ9018 023
40TE	GJ9018 008	GJ9018 024
45TE	GJ9018 009	GJ9018 025
50TE	GJ9018 010	GJ9018 026
55TE	GJ9018 011	GJ9018 027
60TE	GJ9018 012	GJ9018 028
65TE	GJ9018 013	GJ9018 029
70TE	GJ9018 014	GJ9018 030
75TE	GJ9018 015	GJ9018 031
80TE	GJ9018 016	GJ9018 032

Table 3 - IP52 sealing rings

For further details on mounting MiDOS relays, see publication R7012, “MiDOS Parts Catalogue and Assembly Instructions”.

4 RELAY WIRING

This section serves as a guide to selecting the appropriate cable and connector type for each terminal on the MiCOM relay.

Warning **Before carrying out any work on the equipment, you should be familiar with the contents of the Safety Information chapter/safety guide SFTY/4LM/C11 or later issue, the Technical Data chapter and the ratings on the equipment rating label.**

4.1 Medium and Heavy Duty Terminal Block Connections

Key:
Heavy duty terminal block: CT and VT circuits, terminals with “D” prefix
Medium duty: All other terminal blocks (grey color)

Loose relays are supplied with sufficient M4 screws for making connections to the rear mounted terminal blocks using ring terminals, with a recommended maximum of two ring terminals per relay terminal.

If required, Schneider Electric can supply M4 90° crimp ring terminals in three different sizes depending on wire size (see Table 4). Each type is available in bags of 100.

Part number	Wire size	Insulation colour
ZB9124 901	0.25 – 1.65mm^2 (22 – 16AWG)	Red
ZB9124 900	1.04 – 2.63mm^2 (16 – 14AWG)	Blue
ZB9124 904	2.53 – 6.64mm^2 (12 – 10AWG)	Uninsulated*

Note ** To maintain the terminal block insulation requirements for safety, fit an insulating sleeve over the ring terminal after crimping.*

Table 4 - M4 90° crimp ring terminals

The following minimum wire sizes are recommended:

- Current Transformers 2.5mm^2
- Auxiliary Supply Vx 1.5mm^2
- RS485 Port See separate section
- Rotor winding to P391 1.0mm^2
- Other circuits 1.0mm^2

Due to the limitations of the ring terminal, the maximum wire size that can be used for any of the medium or heavy duty terminals is 6.0mm^2 using ring terminals that are not pre-insulated. Where it required to only use pre-insulated ring terminals, the maximum wire size that can be used is reduced to 2.63mm^2 per ring terminal. If a larger wire size is required, two wires should be used in parallel, each terminated in a separate ring terminal at the relay.

The wire used for all connections to the medium and heavy duty terminal blocks, except the RS485 port, should have a minimum voltage rating of 300Vrms.

It is recommended that the auxiliary supply wiring should be protected by a 16A High Rupture Capacity (HRC) fuse of type NIT or TIA. For safety reasons, current transformer

circuits must never be fused. Other circuits should be appropriately fused to protect the wire used.

Note	*The high-break contacts optional fitted to P44y (P443/P446) and P54x relays are polarity sensitive. External wiring must respect the polarity requirements which are shown on the external connection diagram to ensure correct operation.*

Each opto input has selectable filtering. This allows use of a pre-set filter of ½ cycle which renders the input immune to induced noise on the wiring: although this method is secure it can be slow, particularly for intertripping. This can be improved by switching off the ½ cycle filter in which case one of the following methods to reduce ac noise should be considered. The first method is to use double pole switching on the input, the second is to use screened twisted cable on the input circuit. The recognition time of the opto inputs without the filtering is <2 ms and with the filtering is <12 ms.

4.2 EIA(RS)485 Port

Connections to the first rear EIA(RS)485 port use ring terminals. 2-core screened cable is recommended with a maximum total length of 1000m or 200nF total cable capacitance.

A typical cable specification would be:

Each core:	16/0.2mm copper conductors. PVC insulated
Nominal conductor area:	0.5mm^2 per core
Screen:	Overall braid, PVC sheathed

See the SCADA Communications chapter for details of setting up an EIA(RS)485 bus.

4.3 Current Loop Input Output (CLIO) Connections (if applicable)

Where current loop inputs and outputs are available on a MiCOM relay, the connections are made using screw clamp connectors, as per the RTD inputs, on the rear of the relay which can accept wire sizes between 0.1 mm^2 and 1.5 mm^2. It is recommended that connections between the relay and the current loop inputs and outputs are made using a screened cable. The wire should have a minimum voltage rating of 300 Vrms.

4.4 IRIG-B Connections (if applicable)

The IRIG-B input and BNC connector have a characteristic impedance of 50Ω. It is recommended that connections between the IRIG-B equipment and the relay are made using coaxial cable of type RG59LSF with a halogen free, fire retardant sheath.

4.5 EIA(RS)232 Port

Short term connections to the RS232 port, located behind the bottom access cover, can be made using a screened multi-core communication cable up to 15m long, or a total capacitance of 2500pF. The cable should be terminated at the relay end with a 9-way, metal shelled, D-type male plug. The Getting Started chapter of this manual details the pin allocations.

4.6 Optical Fiber Connectors (when applicable)

Warning **LASER LIGHT RAYS: Where fibre optic communication devices are fitted, never look into the end of a fiber optic due to the risk of causing serious damage to the eye. Optical power meters should be used to determine the operation or signal level of the device. Non-observance of this rule could possibly result in personal injury.**

If electrical to optical converters are used, they must have management of character idle state capability (for when the fibre optic cable interface is "Light off").

Specific care should be taken with the bend radius of the fibres, and the use of optical shunts is not recommended as these can degrade the transmission path over time.

The relay uses 1310nm multi mode 100BaseFx and BFOC 2.5 - (ST/LC according to the MiCOM model) connectors (one Tx – optical emitter, one Rx – optical receiver).

4.7 Ethernet Port for IEC 61850 and/or DNP3.0 (where applicable)

4.7.1 Fiber Optic (FO) Port

The relays can have 100 Mbps Ethernet port. Fibre Optic (FO) connection is recommended for use in permanent connections in a substation environment. The 100 Mbit port uses a type ST/LC connector (according to the MiCOM model), compatible with fiber multimode 50/125 µm or 62.5/125 µm to 1310 nm.

Note *The new LC fiber optical connector can be used with the Px40 Enhanced Ethernet Board.*

4.7.2 RJ-45 Metallic Port

The user can connect to either a 10Base-T or a 100Base-TX Ethernet hub; the port will automatically sense which type of hub is connected. Due to possibility of noise and interference on this part, it is recommended that this connection type be used for short-term connections and over short distance. Ideally, where the relays and hubs are located in the same cubicle.

The connector for the Ethernet port is a shielded RJ-45. Table 5 shows the signals and pins on the connector.

Pin	Signal name	Signal definition
1	TXP	Transmit (positive)
2	TXN	Transmit (negative)
3	RXP	Receive (positive)
4	-	Not used
5	-	Not used
6	RXN	Receive (negative)
7	-	Not used
8	-	Not used

Table 5 - Signals on the Ethernet connector

4.8 RTD Connections (if applicable)

Where RTD inputs are available on a MiCOM relay, the connections are made using screw clamp connectors on the rear of the relay that can accept wire sizes between 0.1 mm^2 and 1.5 mm^2. The connections between the relay and the RTDs must be made using a screened 3-core cable with a total resistance less than 10 Ω. The cable should have a minimum voltage rating of 300 Vrms.

A 3-core cable should be used even for 2-wire RTD applications, as it allows for the cable's resistance to be removed from the overall resistance measurement. In such cases the third wire is connected to the second wire at the point the cable is joined to the RTD.

The screen of each cable must only be earthed at one end, preferably at the relay end and must be continuous. Multiple earthing of the screen can cause circulating current to flow along the screen, which induces noise and is unsafe.

It is recommended to minimize noise pick-up in the RTD cables by keeping them close to earthed metal casings and avoiding areas of high electromagnetic and radio interference. The RTD cables should not be run adjacent to or in the same conduit as other high voltage or current cables.

A typical cable specification would be:

Each core:	7/0.2 mm copper conductors heat resistant PVC insulated
Nominal conductor area:	0.22 mm^2 per core
Screen:	Nickel-plated copper wire braid heat resistant PVC sheathed

The extract below may be useful in defining cable recommendations for the RTDs:

Noise pick up by cables can be categorized in to three types:

- Resistive
- Capacitive
- Inductive

Resistive coupling	requires there to be an electrical connection to the noise source. So assuming that the wire and cable insulation is sound and that the junctions are clean then this can be dismissed.
Capacitive coupling	requires there to be sufficient capacitance for the impedance path to the noise source to be small enough to allow for significant coupling. This is a function of the dielectric strength between the signal cable on the noise source and the potential (i.e. power) of the noise source.
Inductive coupling	occurs when the signal cable is adjacent to a cable/wire carrying the noise or it is exposed to a radiated EMF.

Standard screened cable is normally used to protect against capacitively coupled noise, but in order for it to be effective the screen must only be bonded to the system ground at one point, otherwise a current could flow and the noise would be coupled in to the signal wires of the cable. There are different types of screening available, but basically there are two types: aluminum foil wrap and tin-copper braid.

Foil screens are good for low to medium frequencies and braid is good for high frequencies. High-fidelity screen cables provide both types.

Protection against magnetic inductive coupling requires very careful cable routing and magnetic shielding. The latter can be achieved with steel-armored cable and the use of steel cable trays. It is important that the armor of the cable is grounded at both ends so that the EMF of the induced current cancels the field of the noise source and hence

shields the cables conductors from it. (However, the design of the system ground must be considered and care taken to not bridge two isolated ground systems since this could be hazardous and defeat the objectives of the original ground design). The cable should be laid in the cable trays as close as possible to the metal of the tray and under no circumstance should any power cable be in or near to the tray. (Power cables should only cross the signal cables at 90 degrees and never be adjacent to them).

Both the capacitive and inductive screens must be contiguous from the RTD probes to the relay terminals.

The best types of cable are those provided by the RTD manufactures. These tend to be three conductors (a so call "triad") which are screened with foil. Such triad cables are available in armored forms as well as multi-triad armored forms.

4.9 Download/Monitor Port

Short term connections to the download/monitor port, located behind the bottom access cover, can be made using a screened 25-core communication cable up to 4m long. The cable should be terminated at the relay end with a 25-way, metal shelled, D-type male plug.

The Getting Started and Commissioning chapters this manual details the pin allocations.

4.10 Second EIA(RS)232/485 Port

Relays with Courier, MODBUS, IEC 60870-5-103 or DNP3 protocol on the first rear communications port have the option of a second rear port, running Courier language.

The second rear communications port can be used over one of three physical links:

- twisted pair K-Bus (non-polarity sensitive),
- twisted pair EIA(RS)485 (connection polarity sensitive) or
- EIA(RS)232. This EIA(RS)232 port is actually compliant to EIA(RS)574; the 9-pin version of EIA(RS)232, see www.tiaonline.org.

4.10.1 Connection to the Second Rear Port

The second rear Courier port connects via a 9-way female D-type connector (SK4) in the middle of the card end plate (in between IRIG-B connector and lower D-type). The connection is compliant to EIA(RS)574.

4.10.1.1 For IEC 60870-5-2 over EIA(RS)232/574

Pin	Connection
1	No Connection
2	RxD
3	TxD
4	DTR#
5	Ground
6	No Connection
7	RTS#
8	CTS#
9	No Connection
# - These pins are control lines for use with a modem.	

Table 6 - Description needed

Connections to the second rear port configured for EIA(RS)232 operation can be made using a screened multi-core communication cable up to 15 m long, or a total capacitance of 2500 pF. The cable should be terminated at the relay end with a 9-way, metal shelled, D-type male plug. The table above details the pin allocations.

4.10.1.2 For K-bus or IEC 60870-5-2 over EIA(RS)485

Pin*	Connection
4	EIA(RS)485 - 1 (+ ve)
7	EIA(RS)485 - 2 (- ve)
* - All other pins unconnected.	

Note *Connector pins 4 and 7 are used by both the EIA(RS)232/574 and EIA(RS)485 physical layers, but for different purposes. Therefore, the cables should be removed during configuration switches.*
For the EIA(RS)485 protocol an EIA(RS)485 to EIA(RS)232/574 converter will be required to connect a modem or PC running MiCOM S1 Studio, to the relay. A Schneider Electric CK222 is recommended.
EIA(RS)485 is polarity sensitive, with pin 4 positive (+) and pin 7 negative (-).
The K-Bus protocol can be connected to a PC via a KITZ101 or 102.
It is recommended that a 2-core screened cable be used. To avoid exceeding the second communications port flash clearances it is recommended that the length of cable between the port and the communications equipment should be less than 300 m. This length can be increased to 1000 m or 200nF total cable capacitance if the communications cable is not laid in close proximity to high current carrying conductors. The cable screen should be earthed at one end only.

Table 7 - Description needed

A typical cable specification would be:

Each core:	16/0.2 mm copper conductors PVC insulated
Nominal conductor area:	0.5 mm^2 per core
Screen:	Overall braid, PVC sheathed

4.11 Earth Connection (Protective Conductor)

Every relay must be connected to the local earth bar using the M4 earth studs in the bottom left hand corner of the relay case. The minimum recommended wire size is 2.5mm^2 and should have a ring terminal at the relay end.

Due to the limitations of the ring terminal, the maximum wire size that can be used for any of the medium or heavy duty terminals is 6.0mm^2 per wire. If a greater cross-sectional area is required, two parallel connected wires, each terminated in a separate ring terminal at the relay, or a metal earth bar could be used.

Note *To prevent any possibility of electrolytic action between brass or copper earth conductors and the rear panel of the relay, precautions should be taken to isolate them from one another. This could be achieved in a number of ways, including placing a nickel-plated or insulating washer between the conductor and the relay case, or using tinned ring terminals.*

Warning	**Before carrying out any work on the equipment, you should be familiar with the contents of the Safety Information chapter/safety guide SFTY/4LM/C11 or later issue, the Technical Data chapter and the ratings on the equipment rating label.**

4.12 P391 Rotor Earth Fault Unit (REFU) Mounting

Under rotor earth fault conditions, DC currents of up to 29mA can appear in the earth circuit. Accordingly, the P391 must be permanently connected to the local earth via the protective conductor terminal provided.

This section serves as a guide to selecting the appropriate cable and connector type for each terminal on the P391 unit.

Caution	**You must be familiar with all safety statements listed in the Commissioning chapter and the Safety Information section SFTY/4LM/G11 (or later issue) before undertaking any work on the P391.**

Caution	**Under no circumstances should the high voltage DC rotor winding supply be connected via MMLG or P990 test blocks. Both MMLG and P990 test blocks are not rated for continuous working voltages greater than 300 Vrms. These test blocks are not designed to withstand the inductive EMF voltages which will be experienced on disconnection or de-energization of the DC rotor winding supply.**

4.12.1 Medium Duty Terminal Block Connections

Information about the medium duty terminal block connections is described in section 4.1.

Caution	**Wiring between the DC rotor winding and the P391 shall be suitably rated to withstand at least twice the rotor winding supply voltage to earth. This is to ensure that the wiring insulation can withstand the inductive Electro Motive Force (EMF) voltage which will be experienced on disconnection or de-energization of the DC rotor winding supply.**

Due to the limitations of the ring terminal, the maximum wire size that can be used for any of the medium terminals is 6.0 mm^2 using ring terminals that are not pre-insulated (protective conductor terminal (PCT) only). All P391 terminals, except PCT shall be pre-insulated ring terminals, the maximum wire size that can be used is reduced to 2.63 mm^2 per ring terminal.

Wiring between the DC rotor winding and the P391 shall be suitably rated to withstand at least twice the rotor winding supply voltage to earth. The wire used for other P391 connections to the medium duty terminal blocks should have a minimum voltage rating of 300 Vrms.

The dielectric withstand of P391 injection resistor connections (A16, B16, A8, B8) to earth is 5.8 kV rms, 1 minute.

It is recommended that the auxiliary supply wiring should be protected by a High Rupture Capacity (HRC) fuse of type NIT or TIA, rated between 2 A and 16 A. Other circuits should be appropriately fused to protect the wire used.

5 CASE DIMENSIONS

The MiCOM range of products are available in a series of different case sizes.

The case sizes available for each product are shown in the following table:

Product	Case Size		
	40TE	60TE	80TE
P141	Yes		
P142	Yes		
P143		Yes	Yes
P145		Yes	
P241	Yes		
P242		Yes	
P243			Yes
P341	Yes	Yes	
P342	Yes	Yes	
P343		Yes	Yes
P344			Yes
P345			Yes
P441	Yes		
P442		Yes	
P443			Yes
P444			Yes
P445	Yes	Yes	
P446			Yes
P541	Yes		
P542		Yes	
P543		Yes	
P544		Yes	
P545			Yes
P546			Yes
P547			Yes
P642	Yes		
P643		Yes	
P645		Yes	Yes
P741			Yes
P742	Yes		
P743		Yes	
P746			Yes
P841		Yes	Yes
P849			Yes

Table 8 – Products and case sizes

5.1 40TE Case Dimensions

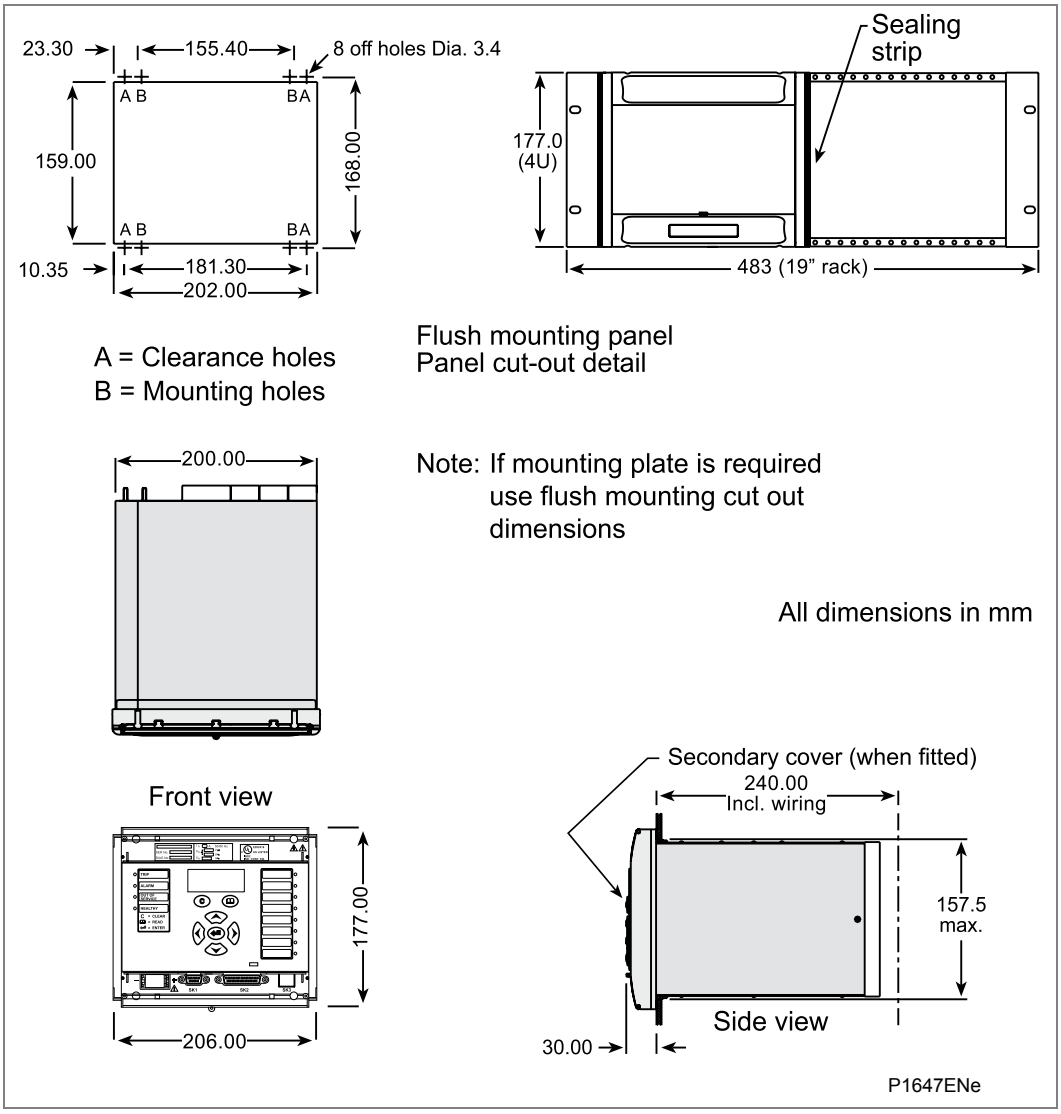

Figure 3 - 40TE Case Dimensions

5.2 60TE Case Dimensions

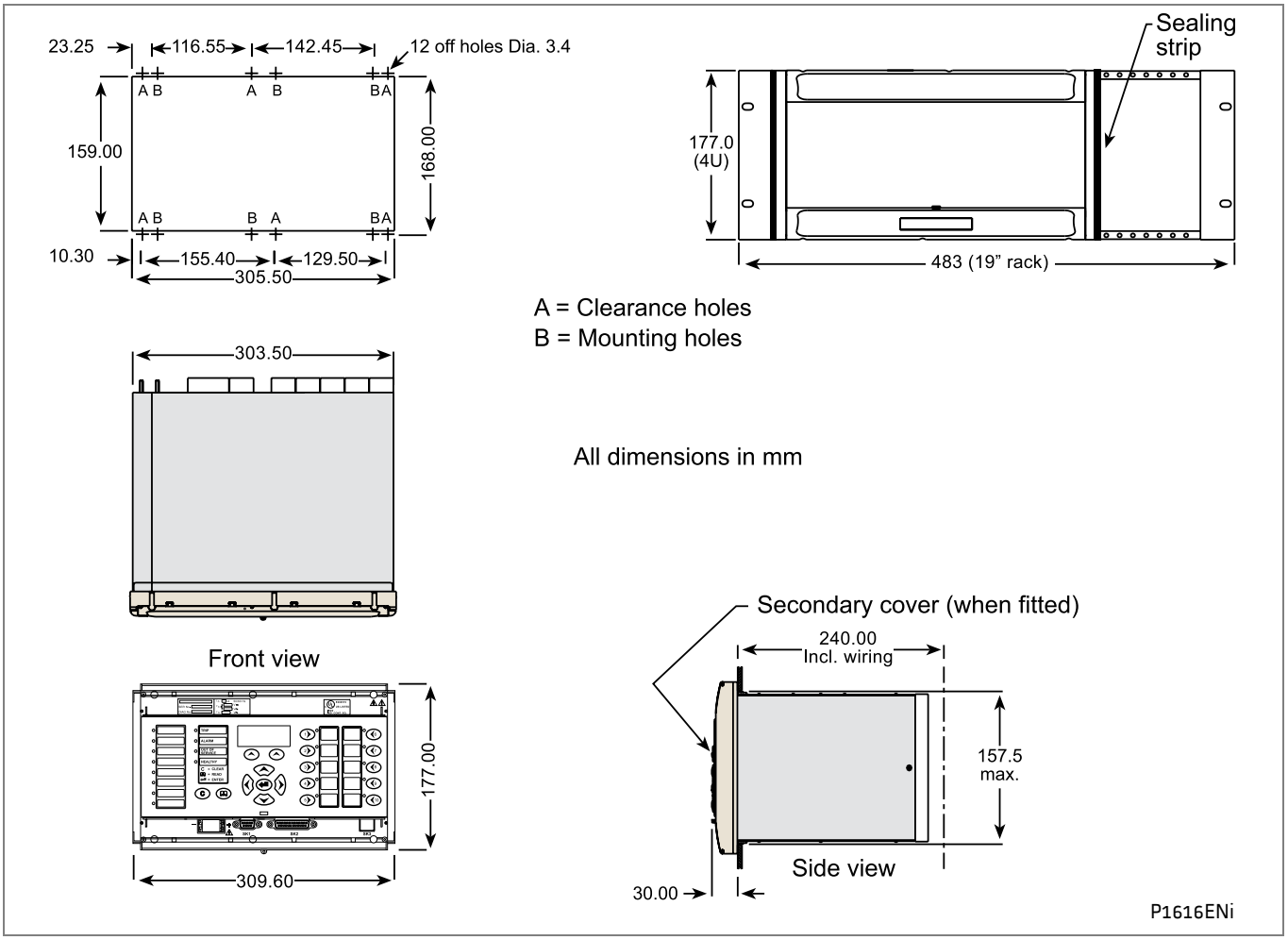

Figure 4 - 60TE Case Dimensions

5.3 80TE Case Dimensions

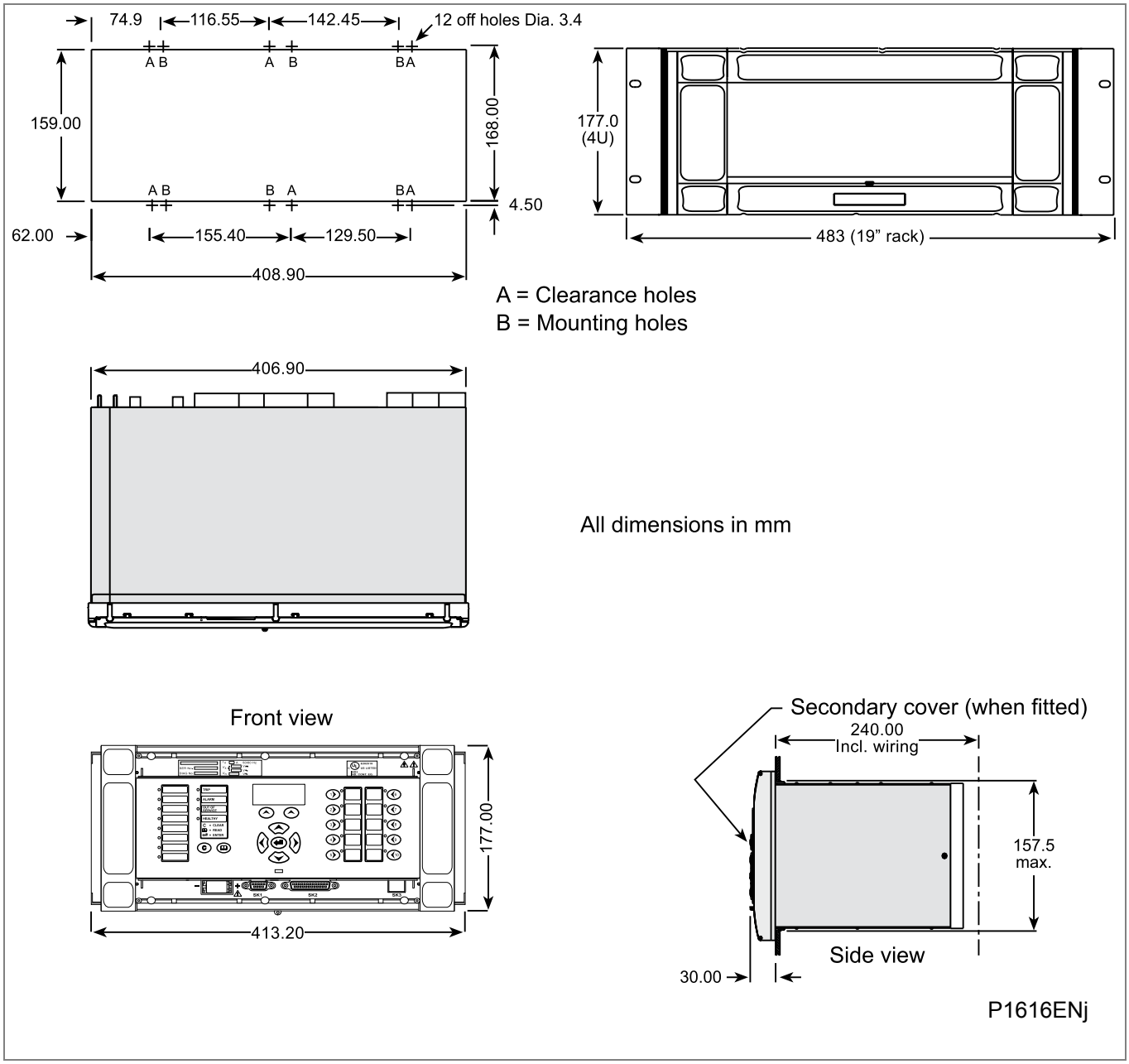

Figure 5 - 80TE Case Dimensions

Notes:

CONNECTION DIAGRAMS

CHAPTER 17

Date:	08/2015
Products covered by this chapter:	This chapter covers the specific versions of the MiCOM products listed below. This includes ***only*** the following combinations of Software Version and Hardware Suffix.
Hardware Suffix:	M
Software Version:	B0
Connection Diagrams:	10P849xx (xx = 01 to 06)

CONTENTS

FIGURES

Notes:

1 COMMUNICATION OPTIONS

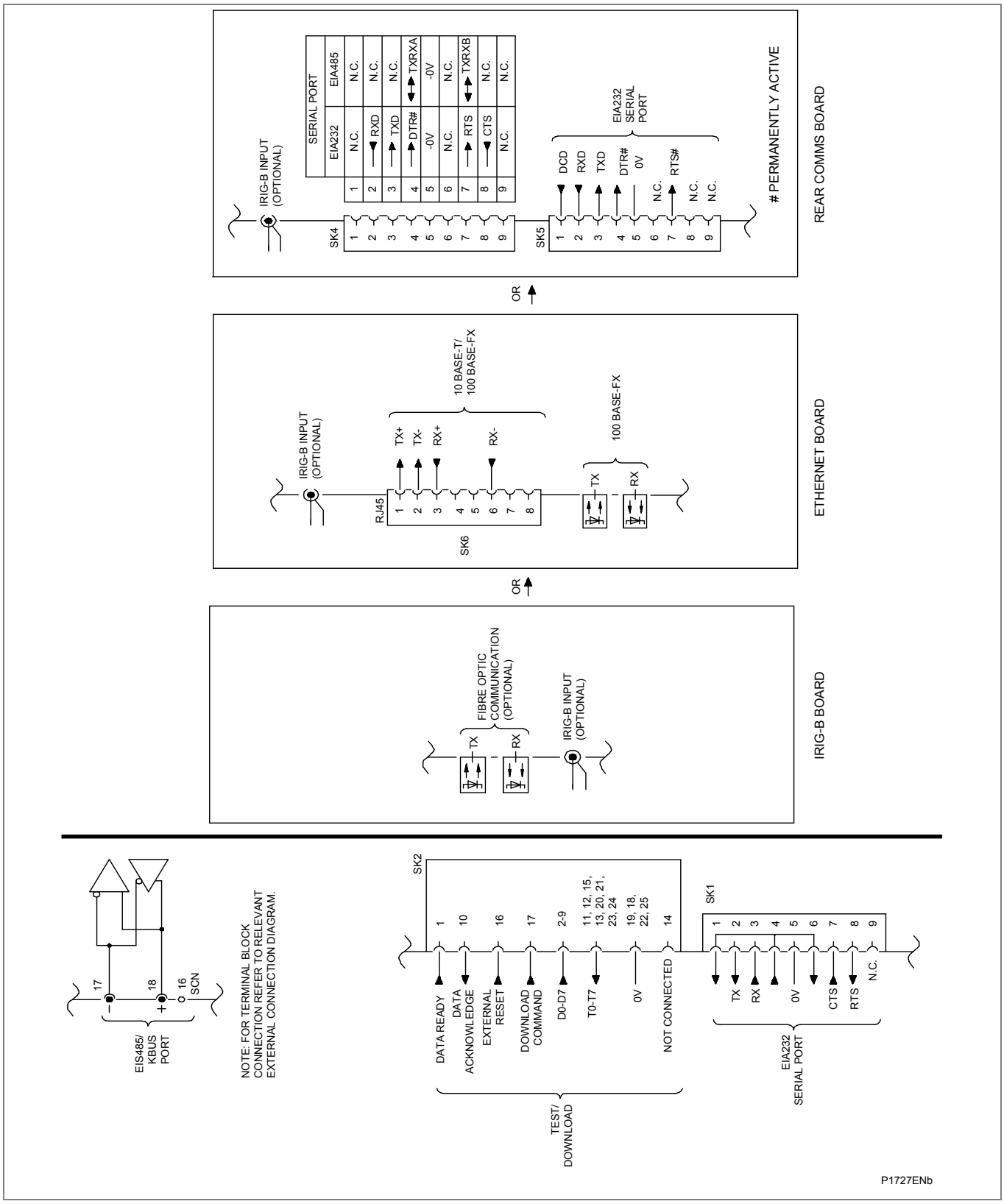

Figure 1 - Comms. Options MiCOM Px40 platform

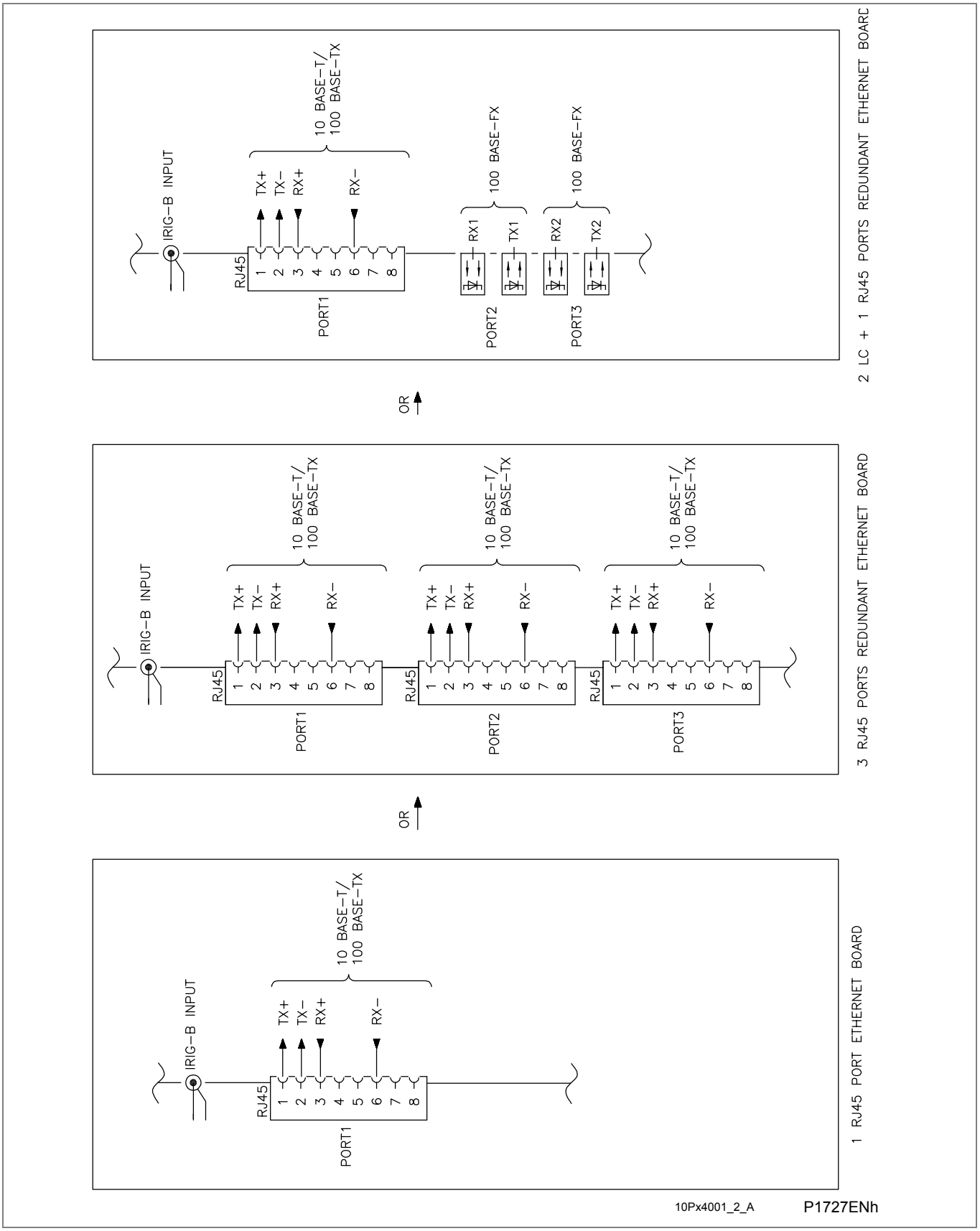

Figure 2 - External Communications Options MiCOM Px40 platform

2 P849 HARDWARE

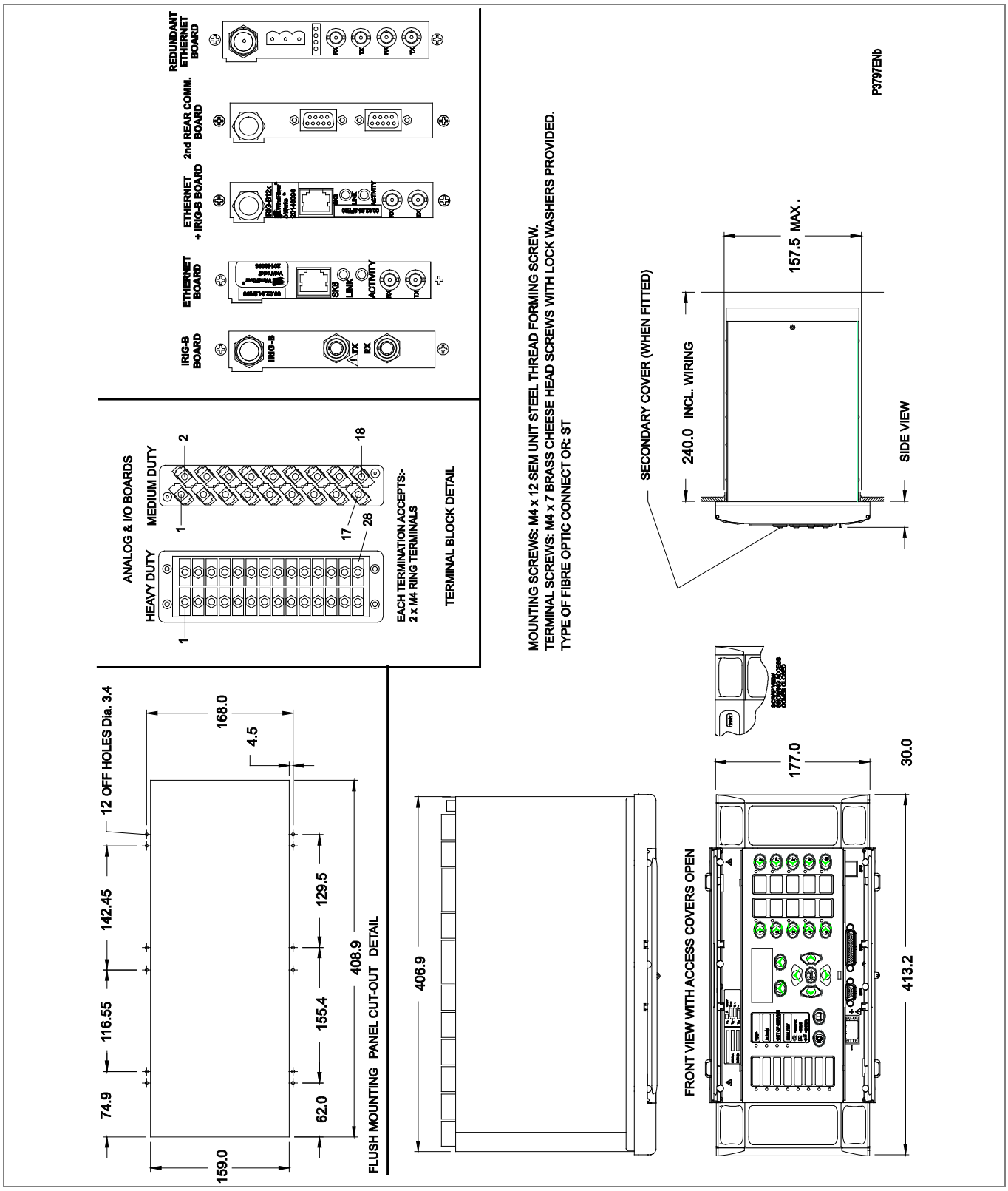

Figure 3 - P849 (80TE) – Hardware description

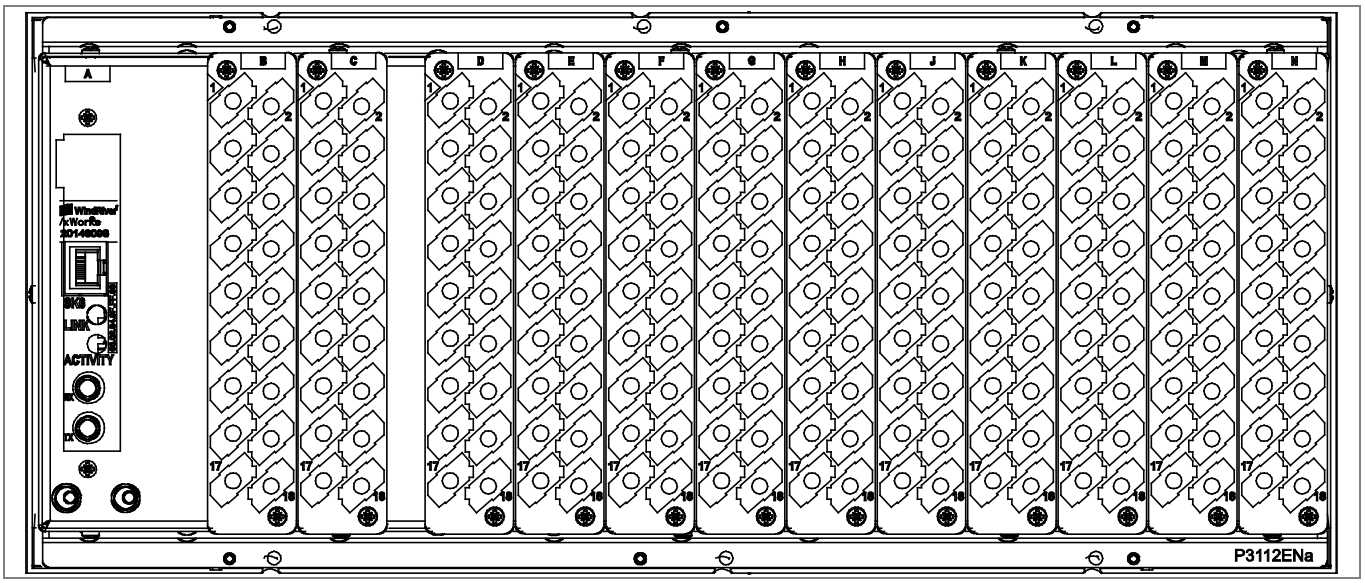

A – IRIG B / Ethernet / COMMS (1)
B – Opto input board (2)
C – Opto input board (2)
D – Opto input board (2)
E – Relay \ Opto (2)
F – Relay \ Opto (2)
G – Relay \ Opto \ High Break (2)
H – Relay \ Opto \ high break (2)
J – Relay \ Opto \ high break (2)
K – Relay \ Opto \ high break (2)
L – Relay board (2)
M – Relay board (2)
N – Power supply board

Figure 4 - P849 (80TE) – Rear View

(1) Hardware options:

– Standard version	P849xx1
– IRIG-B Only (Modulated)	P849xx2
– Single Ethernet 100Mbit/s fibre optic port	P849xx6
– Second Rear Comms (Courier EIA232 / EIA485 / KBUS)	P849xx7
– Second Rear Comms (Courier EIA232 / EIA485 / KBUS) + IRIG-B modulated	P849xx8
– Single Ethernet (100Mbit/s) plus IRIG-B (Modulated)	P849xxA
– Single Ethernet (100Mbit/s) plus IRIG-B (De-modulated)	P849xxB
– IRIG-B (De-modulated)	P849xxC
– InterMiCOM + Courier Rear Port	P849xxE
– InterMiCOM + Courier Rear Port + IRIG-B modulated	P849xxF
– Redundant Ethernet Self-Healing Ring, 2 multi-mode fibre ports + Modulated IRIG-B	P849xxG
– Redundant Ethernet Self-Healing Ring, 2 multi-mode fibre ports + Un-modulated IRIG-B	P849xxH
– Redundant Ethernet RSTP, 2 multi-mode fibre ports + Modulated IRIG-B	P849xxJ
– Redundant Ethernet RSTP, 2 multi-mode fibre ports + Un-modulated IRIG-B	P849xxK
– Redundant Ethernet Dual-Homing Star, 2 multi-mode fibre ports + Modulated IRIG-B	P849xxL
– Redundant Ethernet Dual-Homing Star, 2 multi-mode fibre ports + Un-modulated IRIG-B	P849xxM
– Redundant Ethernet (100Mbit/s) PRP or HSR and Dual IP, 2 LC ports + 1 RJ45 port + Modulated/Un-modulated IRIG-B	P849xxQ
– Redundant Ethernet (100Mbit/s) PRP or HSR and Dual IP, 3 RJ45 ports + Modulated/Unmodulated IRIG-B	P849xxR
– Ethernet (100Mbit/s), 1 RJ45 port + Modulated/Un-modulated IRIG-B	P849xxS

(2) Models:

– P849×××A – (32 Opto-inputs, 16 output relays)
  B: empty
  C: Opto input board (2071960A22)
  D: Opto input board (2071960A22)
  E: Opto input board (2071960A22)
  F: Opto input board (2071960A22)
  G: empty
  H: empty
  J: empty
  K: empty
  L: Relay board (8 relays – 2071962A01)

M: Relay board (8 relays – 2071962A01)

– P849×××B – (32 Opto-inputs, 16 output relays)
  B: empty
  C: Opto input board (2071960A22)
  D: Opto input board (2071960A22)
  E: Opto input board (2071960A22)
  F: Opto input board (2071960A22)
  G: Opto input board (2071960A22)
  H: Opto input board (2071960A22)
  J: empty
  K: Relay board (8 relays – 2071962A01)
  L: Relay board (8 relays – 2071962A01)
  M: Relay board (8 relays – 2071962A01)

P849×××C – (32 Opto-inputs, 30 output relays (16 high break relays))
  B: Opto input board (2071960A22)
  C: Opto input board (2071960A22)
  D: Opto input board (2071960A22)
  E: Opto input board (2071960A22)
  F: empty
  G: High break relay board (ZN0042-001)
  H: High break relay board (ZN0042-001)
  J: High break relay board (ZN0042-001)
  K: High break relay board (ZN0042-001)
  L: Relay board (7 relays – ZN0031-001)
  M: Relay board (7 relays – ZN0031-001)

– P849×××D – (16 Opto-inputs, 60 output relays)
  B: empty
  C: Opto input board (2071960A22)
  D: Opto input board (2071960A22)
  E: Relay board (7 relays – ZN0031-001)
  F: Relay board (7 relays – ZN0031-001)
  G: Relay board (7 relays – ZN0031-001)
  H: Relay board (7 relays – ZN0031-001)
  J: Relay board (8 relays – 2071962A01)
  K: Relay board (8 relays – 2071962A01)
  L: Relay board (8 relays – 2071962A01)
  M: Relay board (8 relays – 2071962A01)

– P849×××E – (32 Opto-inputs, 16 output relays)
  B: empty
  C: Opto input board (2071960A22)
  D: Opto input board (2071960A22)
  E: Opto input board (2071960A22)
  F: Opto input board (2071960A22)
  G: Opto input board (2071960A22)
  H: Opto input board (2071960A22)
  J: Opto input board (2071960A22)
  K: Opto input board (2071960A22)
  L: Relay board (8 relays – 2071962A01)
  M: Relay board (8 relays – 2071962A01)

– P849×××F – (32 Opto-inputs, 16 output relays)

  B: empty
  C: Opto input board (2071960A22)
  D: Opto input board (2071960A22)
  E: Opto input board (2071960A22)
  F: Opto input board (2071960A22)
  G: Relay board (8 relays – 2071962A01)
  H: Relay board (8 relays – 2071962A01)
  J: Relay board (8 relays – 2071962A01)
  K: Relay board (8 relays – 2071962A01)
  L: Relay board (7 relays – ZN0031-001)
  M: Relay board (7 relays – ZN0031-001)

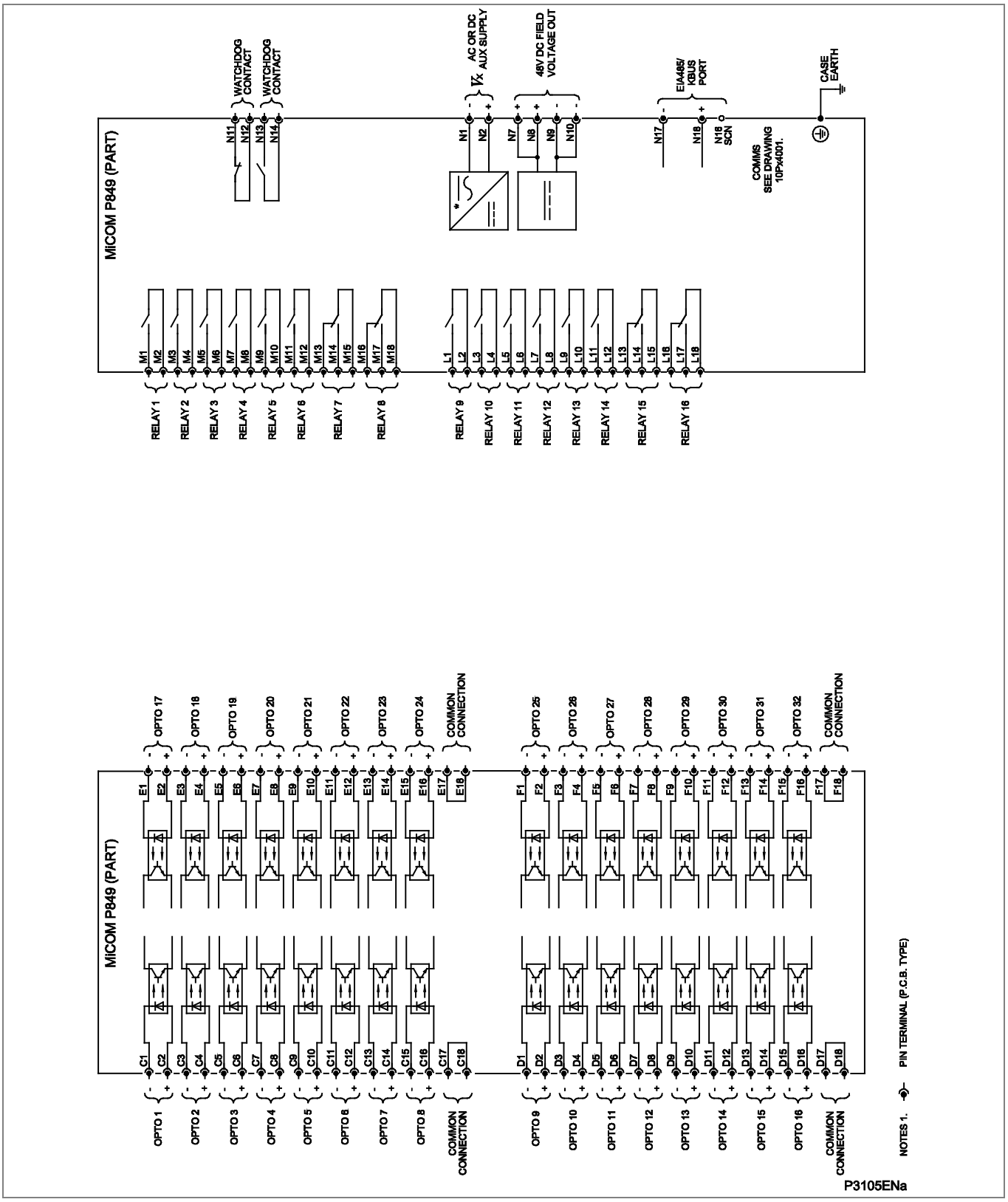

Figure 5 - P849 –P849xxxA (Connection Diagram No P84901)

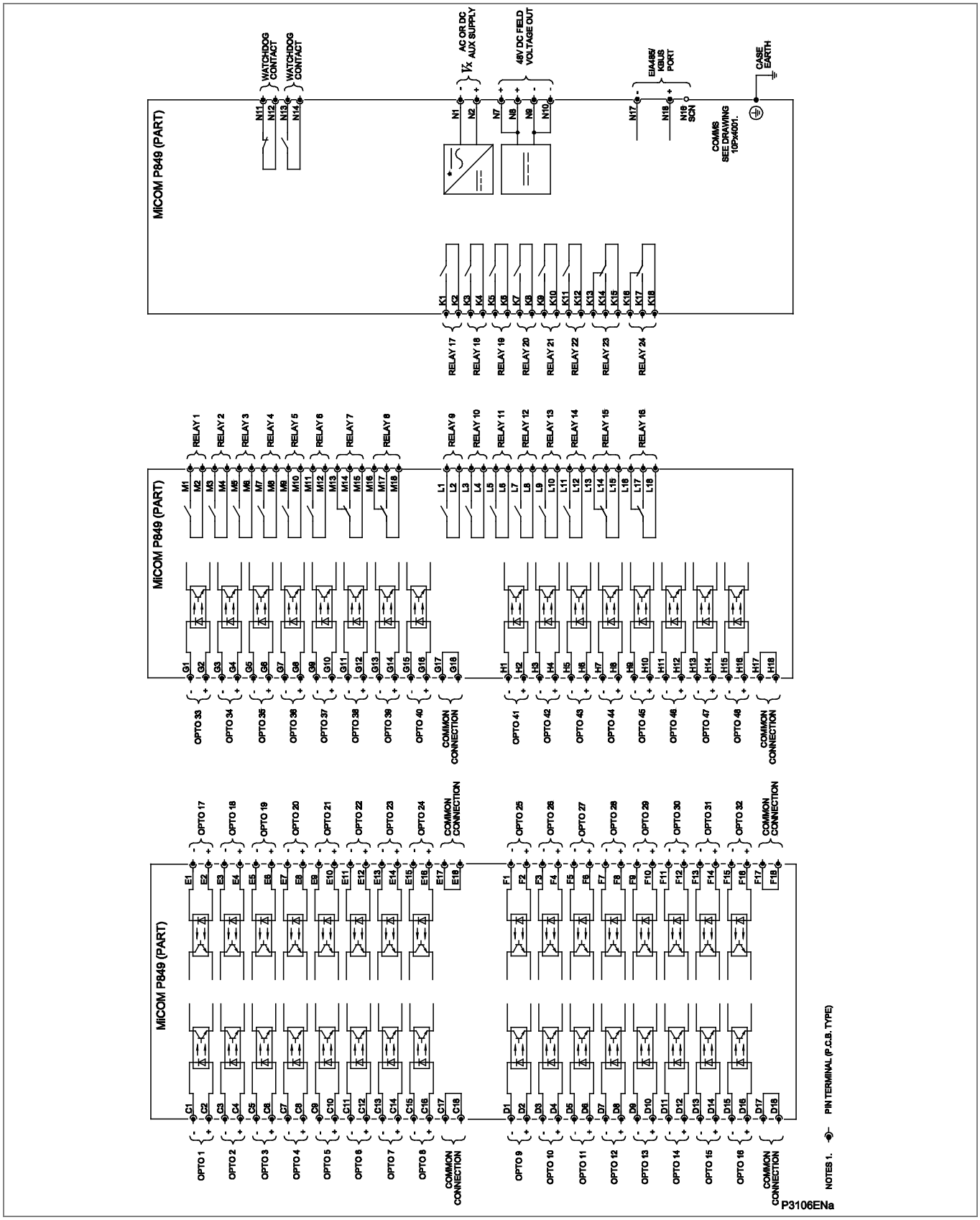

Figure 6 - P849 –P849xxxB (Connection Diagram No P84902)

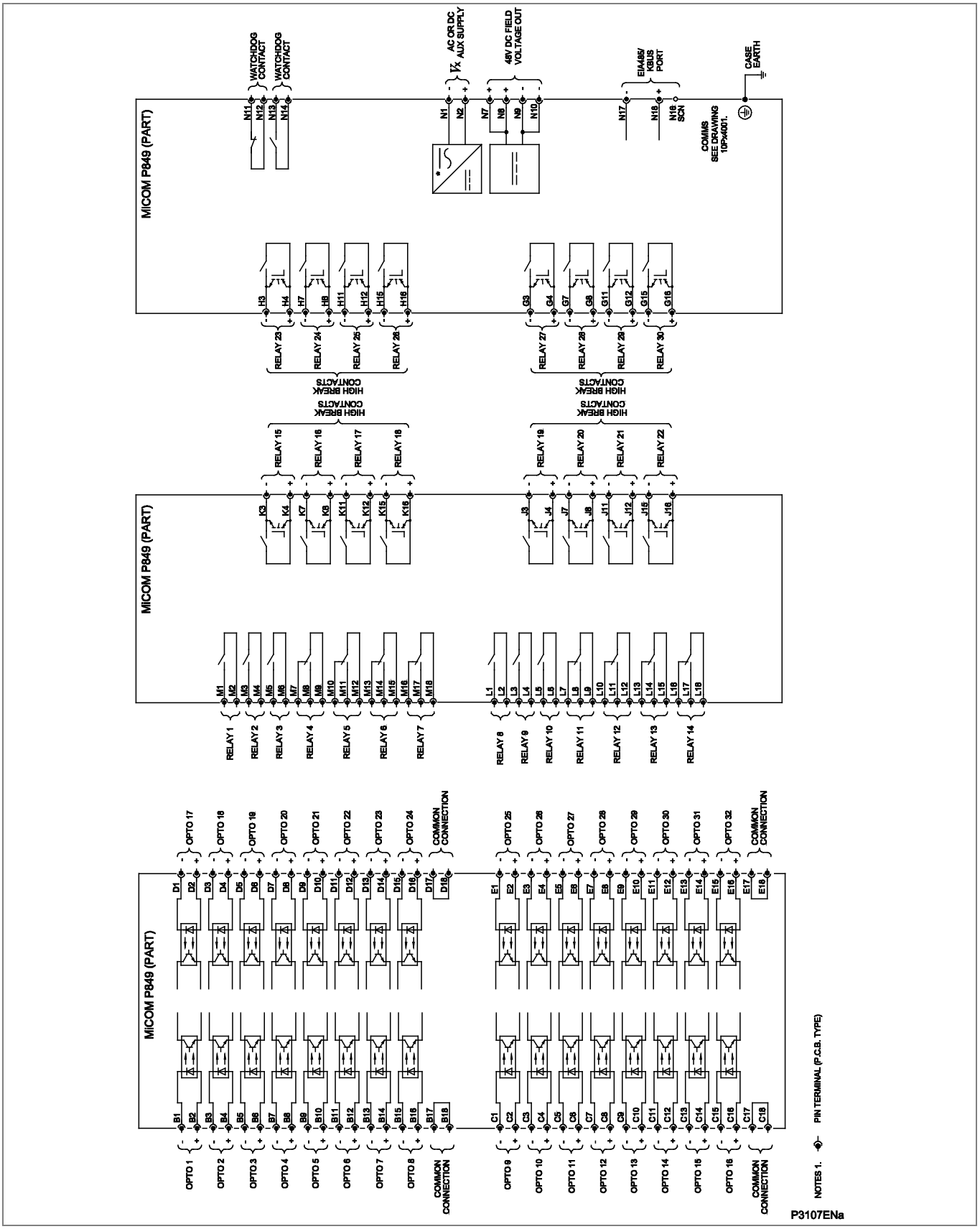

Figure 7 - P849 –P849xxxC (Connection Diagram No P84903)

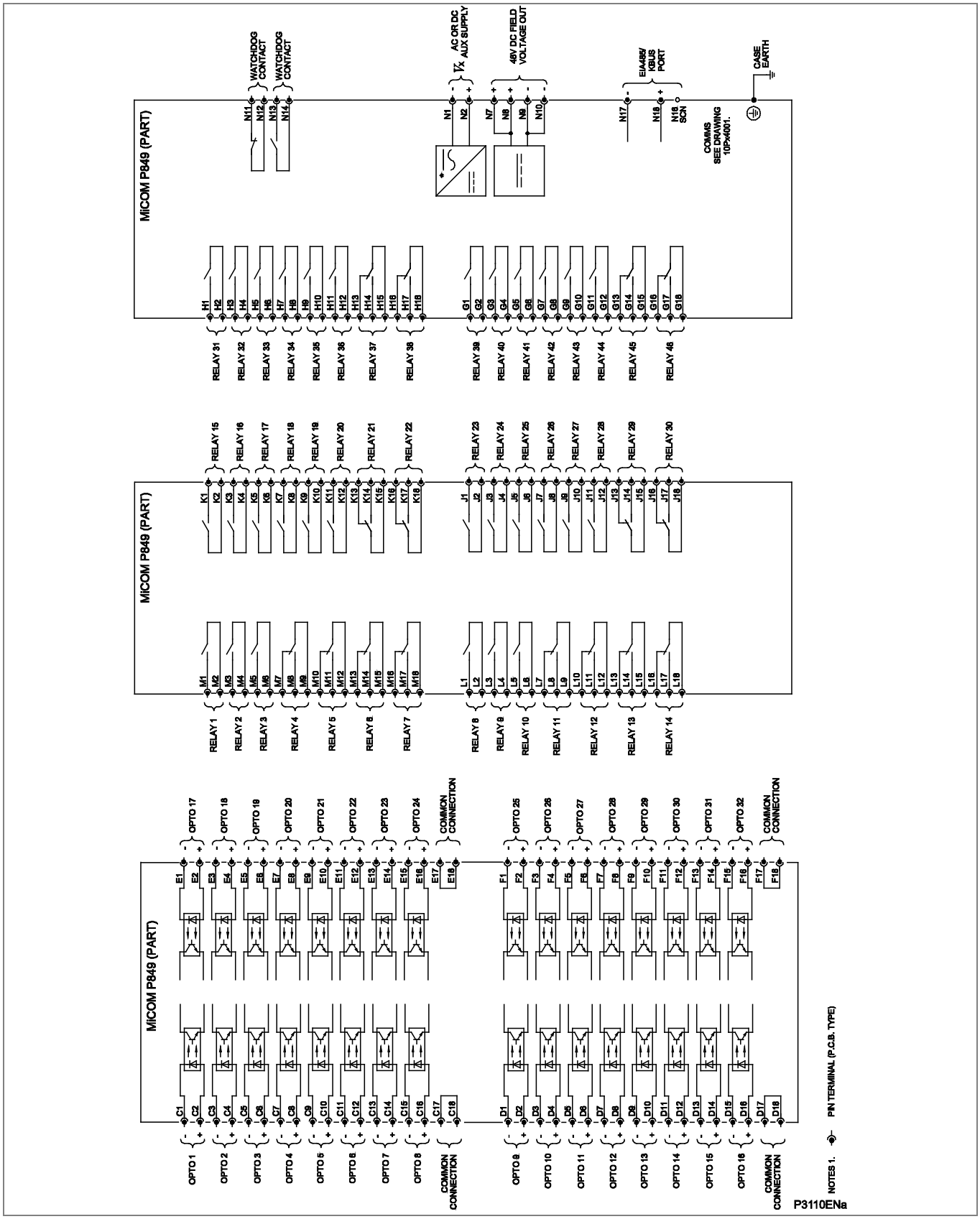

Figure 8 - P849 –P849xxxD (Connection Diagram No P84904)

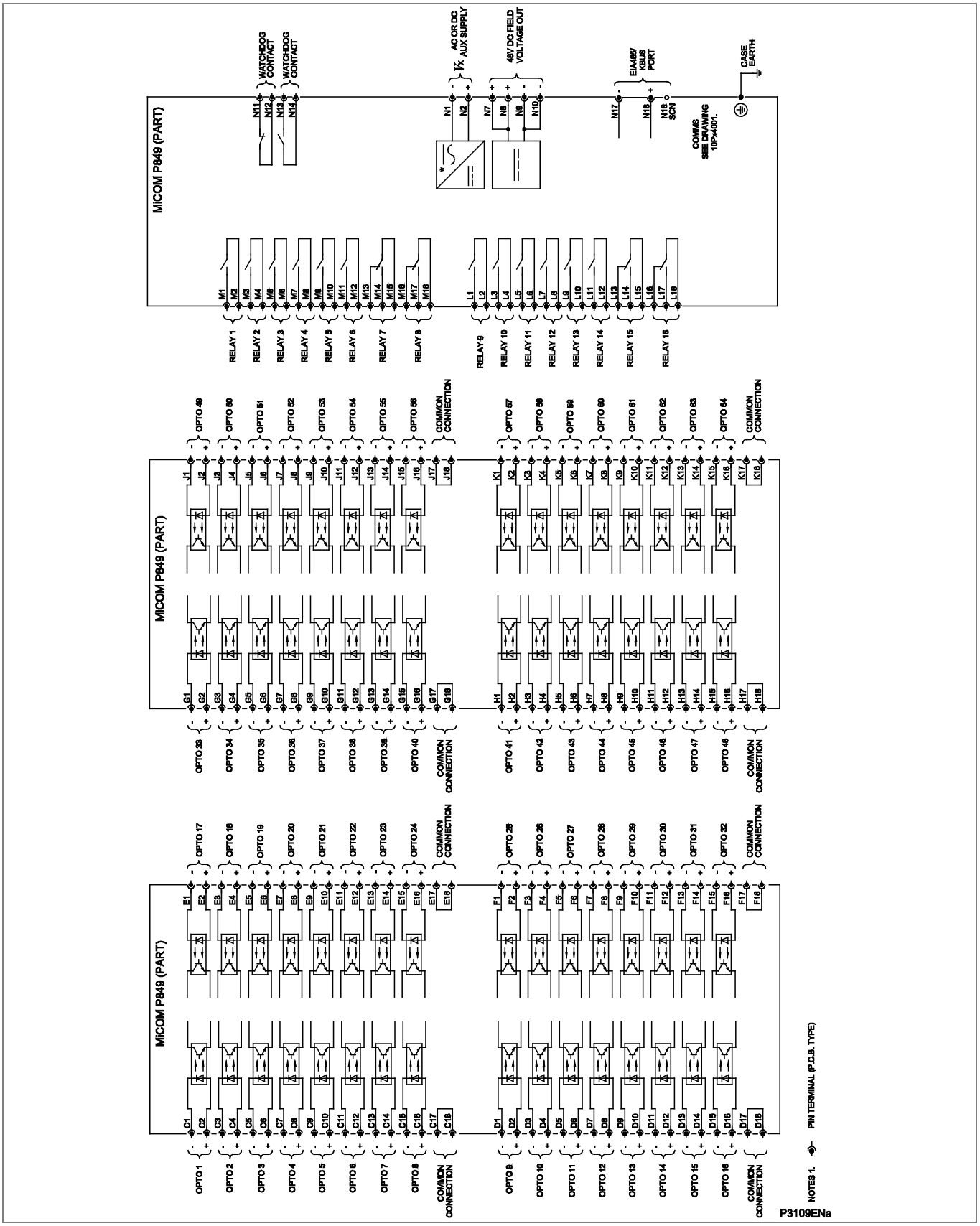

Figure 9 - P849 –P849xxxE (Connection Diagram No P84905)

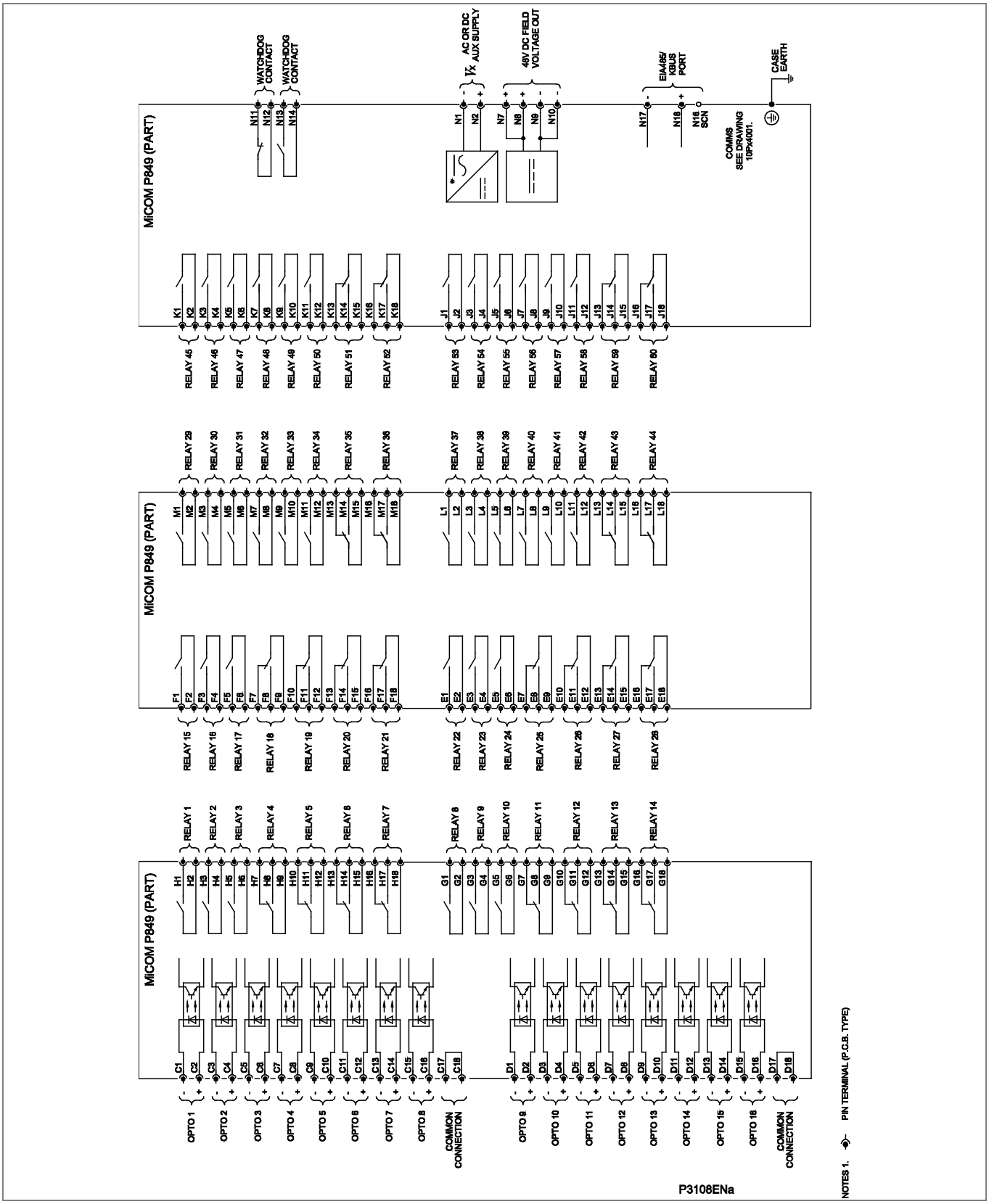

Figure 10 - P849 –P849xxxF (Connection Diagram No P84906)

Notes:

CYBER SECURITY

CHAPTER 18

CONTENTS

Page (CS) **18-**

TABLES

1 OVERVIEW

In the past, substation networks were traditionally isolated and the protocols and data formats used to transfer information between devices were more often than not proprietary.

For these reasons, the substation environment was very secure against cyber attacks. The terms used for this inherent type of security are:

- Security by isolation (if the substation network is not connected to the outside world, it can't be accessed from the outside world).
- Security by obscurity (if the formats and protocols are proprietary, it is very difficult, to interpret them.

The increasing sophistication of protection schemes coupled with the advancement of technology and the desire for vendor interoperability has resulted in standardization of networks and data interchange within substations. Today, devices within substations use standardized protocols for communication. Furthermore, substations can be interconnected with open networks, such as the internet or corporate-wide networks, which use standardized protocols for communication. This introduces a major security risk making the grid vulnerable to cyber-attacks, which could in turn lead to major electrical outages.

Clearly, there is now a need to secure communication and equipment within substation environments. This chapter describes the security measures that have been put in place for Schneider Electric's range of Intelligent Electronic Devices (IEDs).

2 THE NEED FOR CYBER SECURITY

Cyber-security provides protection against unauthorized disclosure, transfer, modification, or destruction of information and/or information systems, whether accidental or intentional. To achieve this, there are several security requirements:

- Confidentiality (preventing unauthorized access to information)
- Integrity (preventing unauthorized modification)
- Availability / Authentication (preventing the denial of service and assuring authorized access to information)
- Non-Repudiation (preventing the denial of an action that took place)
- Traceability/Detection (monitoring and logging of activity to detect intrusion and analyze incidents)

The threats to cyber security may be unintentional (e.g. natural disasters, human error), or intentional (e.g. cyber attacks by hackers).

Good cyber security can be achieved with a range of measures, such as closing down vulnerability loopholes, implementing adequate security processes and procedures and providing technology to help achieve this.

Examples of vulnerabilities are:

- Indiscretions by personnel (e.g. users keep passwords on their computer)
- Bypassing of controls (e.g. users turn off security measures)
- Bad practice (users do not change default passwords, or everyone uses the same password to access all substation equipment)
- Inadequate technology (e.g. substation is not firewalled)

Examples of availability issues are:

- Equipment overload, resulting in reduced or no performance
- Expiry of a certificate prevents access to equipment.

To help tackle these issues, standards organizations have produced various standards, by which compliance significantly reduces the threats associated with lack of cyber security.

3 STANDARDS

There are several standards, which apply to substation cyber security (as shown below).

	Country	
NERC CIP (North American Electric Reliability Corporation)	USA	Framework for the protection of the grid critical Cyber Assets
BDEW (German Association of Energy and Water Industries)	Germany	Requirements for Secure Control and Telecommunication Systems
ANSI ISA 99	USA	ICS oriented then Relevant for EPU completing existing standard and identifying new topics such as patch management
IEEE 1686	International	International Standard for substation IED cyber security capabilities
IEC 62351	International	Power system data and Comm. protocol
ISO/IEC 27002	International	Framework for the protection of the grid critical Cyber Assets
NIST SP800-53 (National Institute of Standards and Technology)	USA	Complete framework for SCADA SP800-82and ICS cyber security
CPNI Guidelines (Centre for the Protection of National Infrastructure)	UK	Clear and valuable good practices for Process Control and SCADA security
The standards currently applicable to Schneider Electric IEDs is NERC and IEEE1686.		

Table 1 - Standards applicable to cyber security

3.1 NERC Compliance

The North American Electric Reliability Corporation (NERC) created a set of standards for the protection of critical infrastructure. These are known as the CIP standards (Critical Infrastructure Protection). These were introduced to ensure the protection of Critical Cyber Assets, which control or have an influence on the reliability of North America's bulk electric systems.

These standards have been compulsory in the USA for several years now. Compliance auditing started in June 2007, and utilities face extremely heavy fines for non-compliance.

The group of CIP standards is listed shown below.

CIP standard	Description
CIP-002-1 Critical Cyber Assets	Define and document the Critical Assets and the Critical Cyber Assets
CIP-003-1 Security Management Controls	Define and document the Security Management Controls required to protect the Critical Cyber Assets
CIP-004-1 Personnel and Training	Define and Document Personnel handling and training required protecting Critical Cyber Assets
CIP-005-1 Electronic Security	Define and document logical security perimeter where Critical Cyber Assets reside and measures to control access points and monitor electronic access
CIP-006-1 Physical Security	Define and document Physical Security Perimeters within which Critical Cyber Assets reside
CIP-007-1 Systems Security Management	Define and document system test procedures, account and password management, security patch management, system vulnerability, system logging, change control and configuration required for all Critical Cyber Assets
CIP-008-1 Incident Reporting and Response Planning	Define and document procedures necessary when Cyber Security Incidents relating to Critical Cyber Assets are identified
CIP-009-1 Recovery Plans	Define and document Recovery plans for Critical Cyber Assets

Table 2 - NERC CIP standards

The following sections provide further details about each of these standards, describing the associated responsibilities of the utility company and where the IED manufacturer can help the utilities with the necessary compliance to these standards.

3.1.1 CIP 002

CIP 002 concerns itself with the identification of:

- Critical assets, such as overhead lines and transformers
- Critical cyber assets, such as IEDs that use routable protocols to communicate outside or inside the Electronic Security Perimeter; or are accessible by dial-up.

Power utility responsibilities:	Schneider Electric's contribution:
Create the list of the assets	We can help the power utilities to create this asset register automatically. We can provide audits to list the Cyber assets

3.1.2 CIP 003

CIP 003 requires the implementation of a cyber security policy, with associated documentation, which demonstrates the management’s commitment and ability to secure its Critical Cyber Assets.

The standard also requires change control practices whereby all entity or vendor-related changes to hardware and software components are documented and maintained.

Power utility responsibilities:	Schneider Electric's contribution:
To create a Cyber Security Policy	We can help the power utilities to have access control to its critical assets by providing centralized Access control. We can help the customer with its change control by providing a section in the documentation where it describes changes affecting the hardware and software.

3.1.3 CIP 004

CIP 004 requires that personnel having authorized cyber access or authorized physical access to Critical Cyber Assets, (including contractors and service vendors), have an appropriate level of training.

Power utility responsibilities:	Schneider Electric's contribution:
To provide appropriate training of its personnel	We can provide cyber security training

3.1.4 CIP 005

CIP 005 requires the establishment of an Electronic Security Perimeter (ESP), which provides:

- The disabling of ports and services that are not required
- Permanent monitoring and access to logs (24x7x365)
- Vulnerability Assessments (yearly at a minimum)
- Documentation of Network Changes

Power utility responsibilities:	Schneider Electric's contribution:
To monitor access to the ESP To perform the vulnerability assessments To document network changes	To disable all ports not used in the IED To monitor and record all access to the IEDthe access at all access points of the ESP

3.1.5 CIP 006

CIP 006 states that Physical Security controls, providing perimeter monitoring and logging along with robust access controls, must be implemented and documented. All cyber assets used for Physical Security are considered critical and should be treated as such:

Power utility responsibilities:	Schneider Electric's contribution:
Provide physical security controls and perimeter monitoring. Ensure that people who have access to critical cyber assets don’t have criminal records Schneider Electric's contribution.	Schneider Electric cannot provide additional help with this aspect.

3.1.6 CIP 007

CIP 007 covers the following points:

- Test procedures
- Ports and services
- Security patch management
- Antivirus
- Account management
- Monitoring
- An annual vulnerability assessment should be performed

Power utility responsibilities:	Schneider Electric's contribution:
To provide an incident response team and have appropriate processes in place	Test procedures; We can provide advice and help on testing. Ports and services; Our devices can disable unused ports and services. Security patch management; We can provide assistance. Antivirus; We can provide advise and assistance. Account management; We can provide advice and assistance. Monitoring; Our equipment monitors and logs access.

3.1.7 CIP 008

CIP 008 requires that an incident response plan be developed, including the definition of an incident response team, their responsibilities and associated procedures.

Power utility responsibilities:	Schneider Electric's contribution:
To provide an incident response team and have appropriate processes in place.	Schneider Electric cannot provide additional help with this aspect.

3.1.8 CIP 009

CIP 009 states that a disaster recovery plan should be created and tested with annual drills.

Power utility responsibilities:	Schneider Electric's contribution:
To implement a recovery plan	To provide guidelines on recovery plans and backup/restore documentation

3.2 IEEE 1686-2007

IEEE 1686-2007 (often referred to only as IEEE 1686) is an IEEE Standard for substation IEDs cyber security capabilities. It proposes practical and achievable mechanisms to achieve secure operations.

The following features described in this standard apply to Schneider Electric Px40 relays:

- Passwords are 8 characters long and can contain upper-case, lower-case, numeric and special characters.
- Passwords are never displayed or transmitted to a user.
- IED functions and features are assigned to different password levels. The assignment is fixed.
- Record of an audit trail listing events in the order in which they occur, held in a circular buffer.
- Records contain all defined fields from the standard and record all defined function event types where the function is supported.
- No password defeat mechanism exists. Instead a secure recovery password scheme is implemented.
- Unused ports (physical and logical) may be disabled.

4 PX40 CYBER SECURITY IMPLEMENTATION

The Schneider Electric IEDs have always been and will continue to be equipped with state-of-the-art security measures. Due to the ever-evolving communication technology and new threats to security, this requirement is not static. Hardware and software security measures are continuously being developed and implemented to mitigate the associated threats and risks.

This section describes the current implementation of cyber security, valid for the release of platform software to which this manual pertains. This current cyber security implementation is known as Cyber Security Phase 1.

At the IED level, these cyber security measures have been implemented:

- Four-level Access
- Password strengthening
- Disabling of unused application and physical ports
- Inactivity timer
- Storage of security events (logs) in the IED
- NERC-compliant default display

External to the IEDs, the following cyber security measures have been implemented:

- Antivirus
- Security patch management

4.1 Four-level Access

For products with cyber security features, the menu structure contains four levels of access, three of which are password-protected. These are summarized below:

Level	Meaning	Read Operation	Write Operation
0	Read Some Write Minimal	SYSTEM DATA column: Description Plant Reference Model Number Serial Number S/W Ref. Access Level Security Feature SECURITY CONFIG column: User Banner Attempts Remain Blk Time Remain Fallback PW level Security Code (UI only)	Password Entry LCD Contrast (UI only)
1	Read All Write Few	All data and settings are readable. Poll Measurements	All items writeable at level 0. Level 1 Password setting Select Event, Main and Fault (upload) Extract Events (e.g. via MiCOM S1 Studio)
2	Read All Write Some	All data and settings are readable. Poll Measurements	All items writeable at level 1. Setting Cells that change visibility (Visible/Invisible). Setting Values (Primary/Secondary) selector Commands: Reset Indication Reset Demand Reset Statistics Reset CB Data / counters Level 2 Password setting
3	Read All Write All	All data and settings are readable. Poll Measurements	All items writeable at level 2. Change all Setting cells Operations: Extract and download Setting file. Extract and download PSL Extract and download MCL61850 (IED Config - IEC61850) Extraction of Disturbance Recorder Courier/Modbus Accept Event (auto event extraction, e.g. via A2R) Commands: Change Active Group setting Close / Open CB Change Comms device address. Set Date & Time Switch MCL banks / Switch Conf. Bank in UI (IED Config - IEC61850) Enable / Disable Device ports (in SECURITY CONFIG column) Level 3 password setting

Table 3 - Password levels

4.1.1 Default Passwords

Default passwords are blank for Level 1 and AAAA for Levels 2 and 3.

4.1.2 Password Rules

- Passwords may be any length between 0 and 8 characters long
- Passwords may or may not be NERC compliant
- Passwords may contain any ASCII character in the range ASCII code 33 (21 Hex) to ASCII code 122 (7A Hex) inclusive
- Only one password is required for all the IED interfaces

4.1.3 Access Level DDBs

In additional to having the 'Access level' cell in the 'System data' column (address 00D0), the current level of access for each interface is also available for use in the Programming Scheme Logic (PSL) by mapping to these Digital Data Bus (DDB) signals:

- HMI Access Lvl 1
- HMI Access Lvl 2
- FPort AccessLvl1
- FPort AccessLvl2
- RPrt1 AccessLvl1
- RPrt1 AccessLvl2
- RPrt2 AccessLvl1
- RPrt2 AccessLvl2

Where: HMI is the Human Machine Interface.

Each pair of DDB signals indicates the access level as follows:

- Lvl 1 off, Lvl 2 off = 0
- Lvl 1 on, Lvl 2 off = 1
- Lvl 1 off, Lvl 2 on = 2
- Lvl 1 on, Lvl 2 on = 3

4.2 Password Strengthening

NERC compliant passwords result in a minimum level of complexity, and include these requirements:

- At least one upper-case alpha character
- At least one lower-case alpha character
- At least one numeric character
- At least one special character (%,$...)
- At least six characters long

4.3 Password Validation

The IED checks for NERC compliance. If the password is entered through the front panel then this is reflected on the panel Liquid Crystal Display (LCD) display.

If the entered password is NERC compliant, the following text is displayed

```
NERC COMPLIANT
P/WORD WAS SAVED
```

The IED does not enforce NERC compliance. It is the responsibility of the user to ensure that compliance is adhered to as and when necessary. In the case that the password entered is not NERC-compliant, the user is required to actively confirm this, in which case the non-compliance is logged.

If the entered password is not NERC compliant, the following text is displayed:

```
NERC COMPLIANCE
NOT MET CONFIRM?
```

On confirmation, the non-compliant password is stored and the following acknowledgement message is displayed for 2 seconds.

```
NON-NERC P/WORD
SAVED OK
```

If the action is cancelled, the password is rejected and password entry appeared again.

If the password is entered through a communications port using Courier or Modbus protocols the IED will store the password, irrespective of whether it is or isn't NERC-compliant, and then uses appropriate response codes to inform the client that the password was NERC-compliant or not. The client then can choose if he/she wishes to enter a new password that is NERC-compliant or leave the entered one in place.

4.3.1 Blank Passwords

A blank password is effectively a zero-length password. Through the front panel it is entered by confirming the password entry without actually entering any password characters. Through a communications port the Courier and Modbus protocols each have a means of writing a blank password to the IED. A blank password disables the need for a password at the level that this password applied.

Blank passwords have a slightly different validation procedure. If a blank password is entered through the front panel, the following text is displayed, after which the procedure is the same as already described:

```
BLANK PASSWORD
ENTERED CONFIRM
```

Blank Passwords cannot be configured if lower level password is not blank.

Blank Passwords affect fall back level after inactivity timeout or logout.

The 'fallback level' is the password level adopted by the IED after an inactivity timeout, or after the user logs out. This will be either the level of the highest level password that is blank, or level 0 if no passwords are blank.

4.4 Password Management

The user is locked out temporarily, after a defined number of failed password entry attempts. The number of password entry attempts, and the blocking periods are configurable. These settings are shown in the *Password blocking configuration* table.

The first invalid password entry sets the attempts count (actual text here) to 1 and initiates an 'attempts timer'. Further invalid passwords during the timed period increments the attempts count. When the maximum number of attempts has been reached, access is blocked. If the attempts timer expires, or the correct password is entered *before* the 'attempt count' reaches the maximum number, then the 'attempts count' is reset to 0.

Once the password entry is blocked, a 'blocking timer' is initiated. Attempts to access the interface whilst the 'blocking timer' is running results in an error message, irrespective of whether the correct password is entered or not. Only after the 'blocking timer' has expired will access to the interface be unblocked, whereupon the attempts counter is reset to zero.

Attempts to write to the password entry whilst it is blocked results in the following message, which is displayed for 2 seconds.

```
NOT ACCEPTED
ENTRY IS BLOCKED
```

Appropriate responses achieve the same result if the password is written through a communications port.

The attempts count, attempts timer and blocking timer can be configured, as shown here:

Setting	Cell col row	Units	Default Setting	Available Setting
Attempts Limit	25 02		2	0 to 3 step 1
Attempts Timer	25 03	Minutes	2	1 to 3 step 1
Blocking Timer	25 04	Minutes	5	1 to 30 step 1

Table 4 - Password blocking configuration

4.5 Password Recovery

Password recovery is the means by which the passwords can be recovered on a device if the customer should mislay the configured passwords. To obtain the recovery password the customer must contact the Schneider Electric Contact Center and supply two pieces of information from the IED – namely the *Serial Number* and its *Security Code*. The Contact Centre will use these items to generate a Recovery Password which is then provided to the customer.

The security code is a 16-character string of upper case characters. It is a read-only parameter. The IED generates its own security code randomly. A new code is generated under the following conditions:

- On power up
- Whenever settings are set back to default
- On expiry of validity timer (see below)
- When the recovery password is entered

As soon as the security code is displayed on the LCD display, a validity timer is started. This validity timer is set to 72 hours and is not configurable. This provides enough time for the contact centre to manually generate and send a recovery password. The Service Level Agreement (SLA) for recovery password generation is one working day, so 72 hours is sufficient time, even allowing for closure of the contact centre over weekends and bank holidays.

To prevent accidental reading of the IED security code the cell will initially display a warning message:

```
PRESS ENTER TO
READ SEC. CODE
```

The security code will be displayed on confirmation, whereupon the validity timer will be started. Note that the security code can only be read from the front panel.

4.5.1 Entry of the Recovery Password

The recovery password is intended for recovery only. It is not a replacement password that can be used continually. It can only be used once – for password recovery.

Entry of the recovery password causes the IED to reset all passwords back to default. This is all it is designed to do. After the passwords have been set back to default, it is up to the user to enter new passwords appropriate for the function for which they are intended, ensuring NERC compliance, if required.

On this action, the following message is displayed:

```
PASSWORDS HAVE
BEEN SET TO DEFAULT
```

The recovery password can be applied through any interface, local or remote. It will achieve the same result irrespective of which interface it is applied through.

4.5.2 Password Encryption

The IED supports encryption for passwords entered remotely. The encryption key can be read from the IED through a specific cell available only through communication interfaces, not the front panel. Each time the key is read the IED generates a new key that is valid only for the next password encryption write. Once used, the key is invalidated and a new key must be read for the next encrypted password write. The encryption mechanism is otherwise transparent to the user.

4.6 Port Disablement

4.6.1 Disabling Physical Ports

It is possible to disable unused physical ports. A level 3 password is needed to perform this action.

To prevent accidental disabling of a port, a warning message is displayed according to whichever port is required to be disabled. For example if rear port 1 is to be disabled, the following message appears:

```
Disable RP1?
ENTER or CLEAR
```

There are between two and four ports eligible for disablement:

- Front port
- Rear port 1
- Rear port 2 (not implemented on all models)
- Ethernet port (not implemented on all models)

Note	*It is not possible to disable a port from which the disabling port command originates.*

4.6.2 Disabling Logical Ports

It is possible to disable unused logical ports. A level 3 password is needed to perform this action.

Note	*The port disabling setting cells are not provided in the settings file.*

Caution	**Disabling the Ethernet port will disable all Ethernet based communications.**

If it is not desirable to disable the Ethernet port, it is possible to disable selected protocols on the Ethernet card and leave others functioning.

Three protocols can be disabled:

- IEC61850
- DNP3 Over Ethernet
- Courier Tunnelling

Note	*If any of these protocols are enabled or disabled, the Ethernet card will reboot.*

4.7 Logging Out

If you have been configuring the IED, you should 'log out'. You do this by going up to the top of the menu tree. When you are at the Column Heading level and you press the Up button, you may be prompted to log out with the following display:

```
ENTER TO LOG OUT
CLEAR TO CANCEL
```

You will only be asked this question if your password level is higher than the fallback level.

If you confirm, the following message is displayed for 2 seconds:

```
LOGGED OUT
Access Level <x>
```

Where x is the current fallback level.

If you decide not to log out (i.e. you cancel), the following message is displayed for 2 seconds.

```
LOGOUT CANCELLED
Access Level <x>
```

Where x is the current access level.

4.8 Events

The implementation of NERC-compliant cyber security necessitates the generation of a range of Event records, which log security issues such as the entry of a non-NERC-compliant password, or the selection of a non-NERC-compliant default display. The following table lists all Security events.

Event Value	Display
PASSWORD LEVEL UNLOCKED	USER LOGGED IN ON <int> LEVEL <n>
PASSWORD LEVEL RESET	USER LOGGED OUT ON <int> LEVEL <n>
PASSWORD SET BLANK	P/WORD SET BLANK BY <int> LEVEL <p>
PASSWORD SET NON-COMPLIANT	P/WORD NOT-NERC BY <int> LEVEL <p>
PASSWORD MODIFIED	PASSWORD CHANGED BY <int> LEVEL <p>
PASSWORD ENTRY BLOCKED	PASSWORD BLOCKED ON <int>
PASSWORD ENTRY UNBLOCKED	P/WORD UNBLOCKED ON <int>
INVALID PASSWORD ENTERED	INV P/W ENTERED ON <int>
PASSWORD EXPIRED	P/WORD EXPIRED ON <int>
PASSWORD ENTERED WHILE BLOCKED	P/W ENT WHEN BLK ON <int>
RECOVERY PASSWORD ENTERED	RCVY P/W ENTERED ON <int>
IED SECURITY CODE READ	IED SEC CODE RD ON <int>

Event Value	Display
IED SECURITY CODE TIMER EXPIRED	IED SEC CODE EXP -
PORT DISABLED	PORT DISABLED BY <int> PORT <prt>
PORT ENABLED	PORT ENABLED BY <int> PORT <prt>
DEF. DISPLAY NOT NERC COMPLIANT	DEF DSP NOT-NERC
PSL SETTINGS DOWNLOADED	PSL STNG D/LOAD BY <int> GROUP <grp>
DNP SETTINGS DOWNLOADED	DNP STNG D/LOAD BY <int>
TRACE DATA DOWNLOADED	TRACE DAT D/LOAD BY <int>
IEC61850 CONFIG DOWNLOADED	IED CONFG D/LOAD BY <int>
USER CURVES DOWNLOADED	USER CRV D/LOAD BY <int> GROUP <crv>
PSL CONFIG DOWNLOADED	PSL CONFG D/LOAD BY <int> GROUP <grp>
SETTINGS DOWNLOADED	SETTINGS D/LOAD BY <int> GROUP <grp>
PSL SETTINGS UPLOADED	PSL STNG UPLOAD BY <int> GROUP <grp>
DNP SETTINGS UPLOADED	DNP STNG UPLOAD BY <int>
TRACE DATA UPLOADED	TRACE DAT UPLOAD BY <int>
IEC61850 CONFIG UPLOADED	IED CONFG UPLOAD BY <int>
USER CURVES UPLOADED	USER CRV UPLOAD BY <int> GROUP <crv>
PSL CONFIG UPLOADED	PSL CONFG UPLOAD BY <int> GROUP <grp>
SETTINGS UPLOADED	SETTINGS UPLOAD BY <int> GROUP <grp>
EVENTS HAVE BEEN EXTRACTED	EVENTS EXTRACTED BY <int> <nov> EVNTS
ACTIVE GROUP CHANGED	ACTIVE GRP CHNGE BY <int> GROUP <grp>
CS SETTINGS CHANGED	C & S CHANGED BY <int>
DR SETTINGS CHANGED	DR CHANGED BY <int>
SETTING GROUP CHANGED	SETTINGS CHANGED BY <int> GROUP <grp>
POWER ON	POWER ON -
SOFTWARE_DOWNLOADED	S/W DOWNLOADED -

Table 5 - Security event values

Where:

int is the interface definition (UI, FP, RP1, RP2, TNL, TCP)
prt is the port ID (FP, RP1, RP2, TNL, DNP3, IEC, ETHR)
grp is the group number (1, 2, 3, 4)
crv is the Curve group number (1, 2, 3, 4)
n is the new access level (0, 1, 2, 3)
p is the password level (1, 2, 3)
nov is the number of events (1 – nnn)

Each event is identified with a unique number that is incremented for each new event so that it is possible to detect missing events as there will be a 'gap' in the sequence of unique identifiers. The unique identifier forms part of the event record that is read or uploaded from the IED.

Note	*It is no longer possible to clear Event, Fault, Maintenance, and Disturbance Records.*

4.9 Cyber Security Settings

Cyber Security is important enough to warrant its own IED column called SECURITY CONFIG, located at column number 25. In addition to this new group, settings are affected in the SYSTEM DATA, COMMS SYS DATA and VIEW RECORDS columns.

A summary of the relevant columns is shown in the following table. A complete listing of the settings criteria is described in the Settings and Records chapter.

Parameter	Cell col row	Default Setting	Available Setting	Interface Applicability	In Setting file?
Password	00 02		ASCII 33 to 122	All	Yes, ~~~~~~~~
Access Level	00 D0		0 = Read Some, 1 = Read All, 2 = Read All + Write Some, 3 = Read All + Write All	All	Yes, Not Settable
Password Level 1	00 D2		ASCII 33 to 122	All	Yes
Password Level 2	00 D3		ASCII 33 to 122	All	Yes
Password Level 3	00 D4		ASCII 33 to 122	All	Yes
Security Feature	00 DF		1	All	Yes, Not Settable
SECURITY CONFIG	25 00			All	Yes
Use Banner	25 01	ACCESS ONLY FOR AUTHORISED USERS	ASCII 32 to 163	All	Yes
Attempts Limit	25 02	2	0 to 3 step 1	All	Yes
Attempts Timer	25 03	2	1 to 3 step 1	All	Yes
Blocking Timer	25 04	5	1 to 30 step 1	All	Yes
Front Port	25 05	Enabled	0 = Disabled or 1 = Enabled	All	No
Rear Port 1	25 06	Enabled	0 = Disabled or 1 = Enabled	All	No
Rear Port 2	25 07	Enabled	0 = Disabled or 1 = Enabled	All	No
Ethernet Port*	25 08	Enabled	0 = Disabled or 1 = Enabled	All	No
Courier Tunnel*†	25 09	Enabled	0 = Disabled or 1 = Enabled	All	No

Parameter	Cell col row	Default Setting	Available Setting	Interface Applicability	In Setting file?
IEC61850*†	25 0A	Enabled	0 = Disabled or 1 = Enabled	All	No
DNP3 OE*†	25 0B	Enabled	0 = Disabled or 1 = Enabled	All	No
Attempts Remain	25 11			All	Yes, Not Settable
Blk Time Remain	25 12			All	Yes, Not Settable
Fallbck PW Level	25 20	0	0 = Password Level 0, 1 = Password Level 1, 2 = Password Level 2, 3 = Password Level 3	All	Yes, Not Settable
Security Code	25 FF			UI Only	No
Evt Unique Id (Normal Extraction)	01 FE			All	No
Evt Iface Source ± (Bits 0 – 7 of Event State)	01 FA			All	No
Evt Access Level ± (Bits 15 – 8 of Event State)	01 FB			All	No
Evt Extra Info 1 ± (Bits 23 – 16 of Event State)	01 FC			All	No
Evt Extra Info 2 ±Ω (Bits 31 – 24 of Event State)	01 FD			All	No

Table 6 - Security cells summary

Where:
* - These cells will not be present in a non-Ethernet product
†- These cells will be invisible if the Ethernet port is disabled.
± - These cells invisible if event is not a Security event
Ω – This cell is invisible in current phase as it does not contain any data. Reserved for future use.

Notes:

DUAL REDUNDANT ETHERNET BOARD (UPGRADE) (DREB)

CHAPTER 19

Date (month/year):	08/2015
Products covered by this chapter:	This chapter covers the specific versions of the MiCOM products listed below. This includes ***only*** the following combinations of Software Version and Hardware Suffix.
Software Version:	**B0** P14x (P141/P142/P143/P145), P34x (P342/P343/P344/P345 & P391), P74x (P741/P742/P743), P849 **B1** P64x (P642, P643 & P645), P746 **C1** P746 **D0** P24x (P241/P242/P243) **E0** P44x (P442 & P444)
Hardware Suffix:	**A** P391 **K** P44x (P441, P442, P444), P445, P74x (P741, P743) **L** P141/P142/P143, P241, P342, P642, P742 **M** P145, P242, P243, P343, P344, P345, P44x (P442, P444), P44y (P443, P446), P54x (P543, P544, P545, P546), P547, P643, P645, P741, P743, P746, P841, P849

CONTENTS

FIGURES

TABLES

Notes:

1 INTRODUCTION

The redundant Ethernet board assures redundancy at IED level. It is fitted into the following MiCOM IEDs from Schneider Electric.

- P141, P142, P143, P145
- P241, P242, P243
- P341, P342, P343, P344, P345
- P442, P443, P444, P445, P446
- P543, P544, P545, P546, P547
- P642, P643, P645
- P741, P743, P746
- P841, P849

1.1 Standard Safety Statements

For safety information please see the Safety Information chapter of the relevant Px4x Technical Manual.

2 HARDWARE DESCRIPTION

IEC 61850 work over Ethernet. Three boards are available:

- 1RJ45 Port Ethernet Board
- 3RJ45 Ports Redundant Ethernet Board
- 2LC+1RJ45 Ports Redundant Ethernet Board.

All are required for communications but 3RJ45 Ports and 2LC+1RJ45 Ports Redundant Ethernet Board allow an alternative path to be always available, providing bumpless redundancy.

Industrial network failure can be disastrous. Redundancy provides increased security and reliability, but also devices can be added to or removed from the network without network downtime.

The following list shows Schneider Electric's implementation of Ethernet redundancy, which has two variants with embedded IEC 61850 over Ethernet, plus PRP and HSR redundancy protocols.

- Parallel Redundancy Protocol (PRP)/High-availability Seamless Redundancy (HSR) with 1310 nm multi mode 100BaseFx fiber optic Ethernet ports (LC connector) and modulated/un- modulated IRIG-B input. Part number 2072069A01.

Note	*The board offers compatibility with any PRP/HSR device.*

- Parallel Redundancy Protocol (PRP)/High-availability Seamless Redundancy (HSR) with 100BaseTx Ethernet ports (RJ45) and modulated/un- modulated IRIG-B input. Part number 2072071A01.

Note	*The board offers compatibility with any PRP/HSR device.*

The redundant Ethernet board is fitted into Slot A of the IED, which is the optional communications slot. Each Ethernet board has three MAC addresses for two groups, one group (PORT 1) including one host MAC address, the other group (PORT 2 & 3) used for redundant application, including one host MAC address and one redundant agency device MAC address. Two host MAC addresses of the IED are printed on the rear panel of the IED.

In additional above for HSR/PRP redundant protocols, the redundant Ethernet board also can be operate on Dual IP mode. In this case, each Ethernet board has two host MAC addresses.

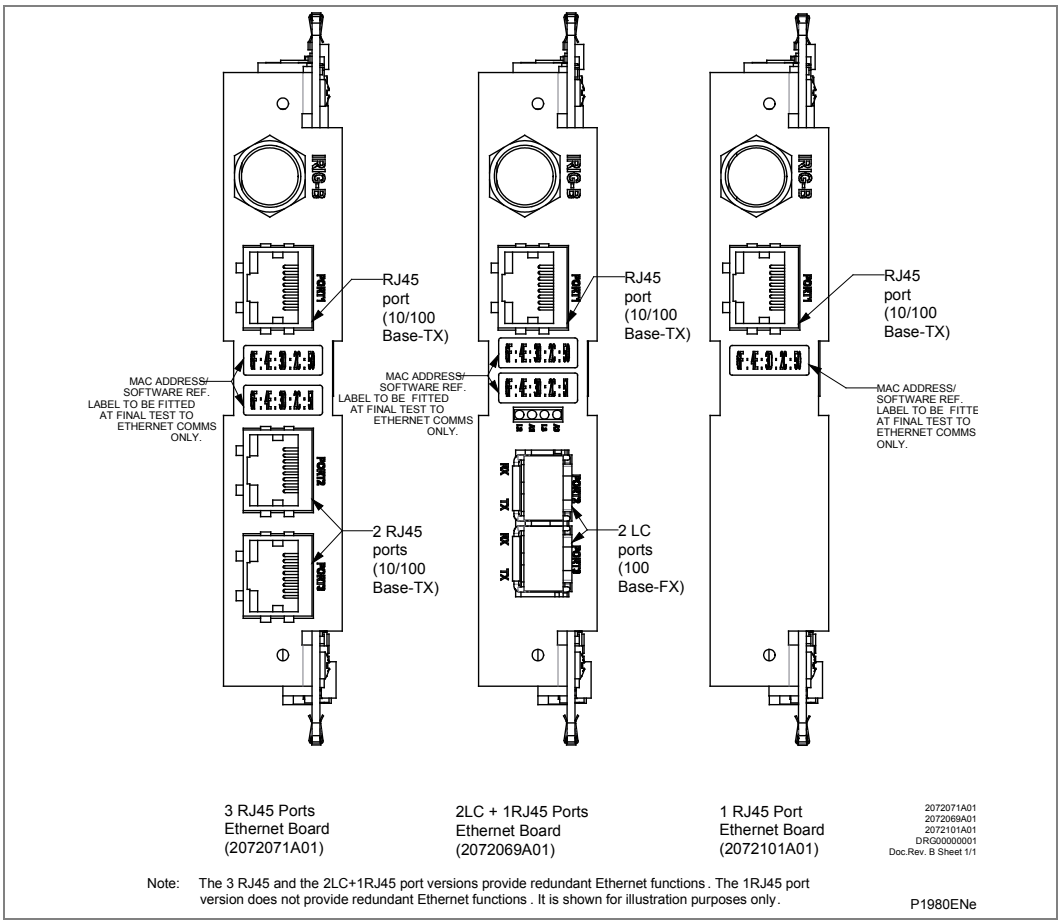

Figure 1 - Ethernet board connectors (3 RJ45 or 2 LC + RJ45 or 1 RJ45)

2.1 IRIG-B Connector

Available as a modulated/un-modulated input. See section 6.1.

2.2 LEDs

LED	Function	On	Off	Flashing
Green	Link	Link ok	Link broken	
Yellow	Activity			Traffic activity

Table 1 - LED functionality

2.3 Optical Fiber Connectors

Use 1310 nm multi mode 100BaseFx and LC connectors. See Figure 1 and section 6.1.

Connector	PRP	HSR
2	R_X	R_X
2	T_X	T_X
3	R_X	R_X
3	T_X	T_X

Table 2 - Optical fiber connector functionality

3 REDUNDANCY PROTOCOLS

There are two redundancy protocols available:

- PRP (Parallel Redundancy Protocol)
- HSR (High-availability Seamless Redundancy)

3.1 Parallel Redundancy Protocol (PRP)

When the upper protocol layers send a data packet, the PRP interface creates a “twin packet” from this. The PRP interface then transmits redundant data packet of the twin pair to each participating LAN simultaneously. As they are transmitted via different LANs, the data packets may have different run times.

The receiving PRP interface forwards the first packet of a pair towards the upper protocol layers and discards the second packet. When viewed from the application, a PRP interface functions like a standard Ethernet interface.

The PRP interface or a Redundancy Box (RedBox) injects a Redundancy Control Trailer (RCT) into each packet. The RCT is a 48-bit identification field and is responsible for the identification of duplicates. This field contains, LAN identification (LAN A or B), information about the length of the payload, and a 16-bit sequence number. The PRP interface increments the sequence number for each packet sent. Using the unique attributes included in each packet, such as Physical MAC source address and sequence number, the receiving RedBox or Double Attached Node (DAN) interface identifies and discards duplicates.

Depending on the packet size, with PRP it attains a throughput of 93 to 99% of the available bandwidth.

3.1.1 PRP Network Structure

PRP uses two independent LANs. The topology of each of these LANs is arbitrary, and ring, star, bus and meshed topologies are possible.

The main advantage of PRP is loss-free data transmission with an active (transit) LAN. When the terminal device receives no packets from one of the LANs, the second (transit) LAN maintains the connection. As long as 1 (transit) LAN is available, repairs and maintenance on the other (transit) LAN have no impact on the data packet transmission.

The elementary devices of a PRP network are known as RedBox (Redundancy Box) and DANP (Double Attached Node implementing PRP).

Both devices have one connection each to the (transit) LANs.

The devices in the (transit) LAN are conventional switches that do not require any PRP support. The devices transmit PRP data packets transparently, without evaluating the RCT information.

Terminal devices that are connected directly to a device in the (transit) LAN are known as SAN (Single Attached Node). If there is an interruption, these terminal devices cannot be reached via the redundant line. To use the uninterruptible redundancy of the PRP network, you integrate your device into the PRP network via a RedBox.

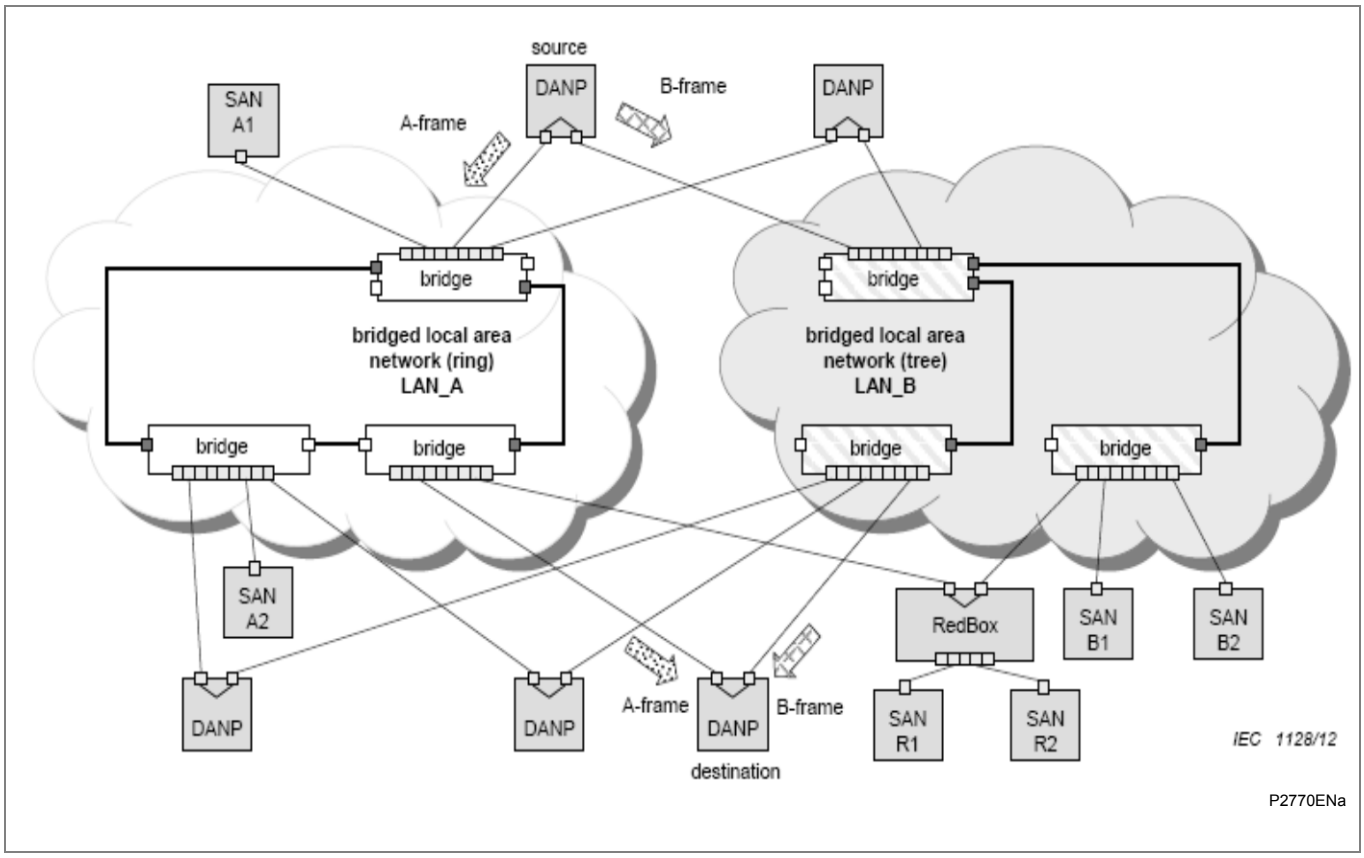

Figure 2 - PRP example of general redundant network

3.1.2 Example Configuration

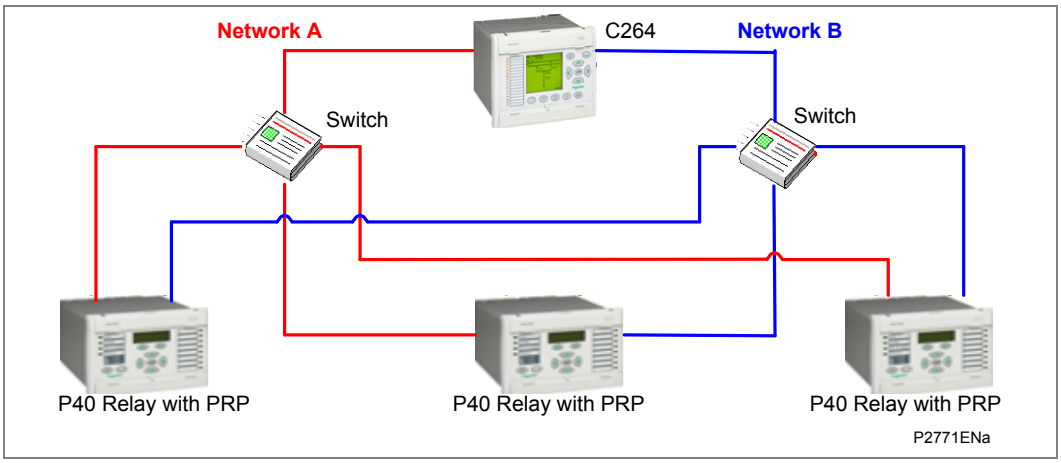

Figure 3 - PRP Relay Configuration

3.2 High-availability Seamless Redundancy (HSR)

High-availability Seamless Redundancy (HSR) is typically used in a ring topology, This Clause describes the application of the PRP principles (Clause 4) to implement a High-availability Seamless Redundancy (HSR), retaining the PRP property of zero recovery time, applicable to any topology, in particular rings and rings of rings. With respect to PRP, HSR allows you to roughly have the network infrastructure. With respect to rings based on IEEE 802.1D (RSTP), IEC 62439-2 (MRP), IEC 62439-6 (DRP) or IEC 62439-7

(RRP), the available network bandwidth for network traffic is somewhat reduced depending on the type of traffic. Nodes within the ring are restricted to be HSR-capable bridging nodes, thus avoiding the use of dedicated bridges. Singly Attached Nodes (SANs) such as laptops or printers cannot be attached directly to the ring, but need attachment through a RedBox (redundancy box).

3.2.1 HSR Network Structure

As in PRP, a node has two ports operated in parallel; it is a DANH (Doubly Attached Node with HSR protocol).
A simple HSR network consists of doubly attached bridging nodes, each having two ring ports, interconnected by full-duplex links, as shown in the example of Figure 4 (multicast) and Figure 5 (unicast) for a ring topology.

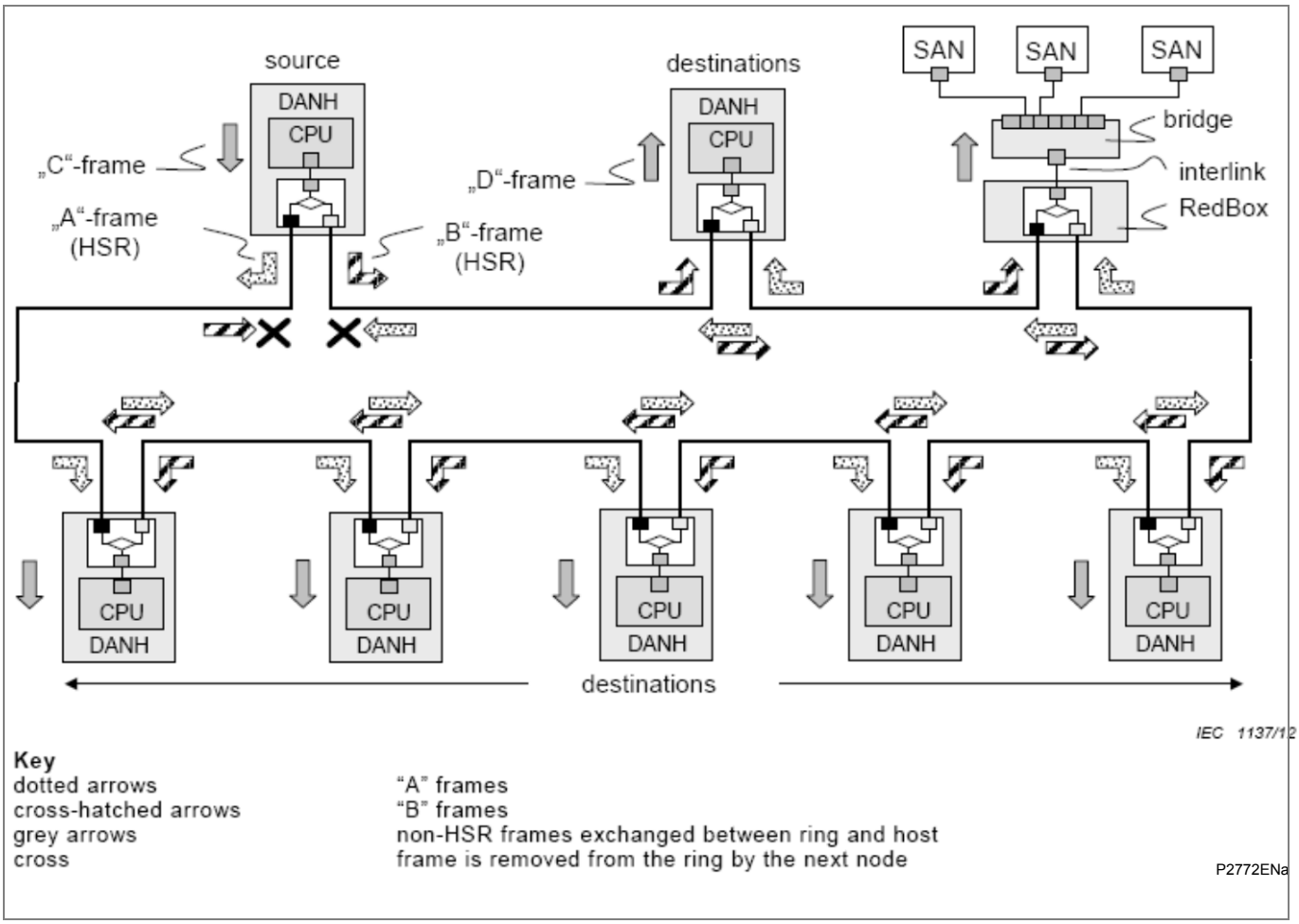

Figure 4 - HSR example of ring configuration for multicast traffic

A source DANH sends a frame passed from its upper layers ("C" frame), prefixes it by an HSR tag to identify frame duplicates and sends the frame over each port ("A"-frame and "B"-frame). A destination DANH receives, in the fault-free state, two identical frames from each port within a certain interval, removes the HSR tag of the first frame before passing it to its upper layers ("D"-frame) and discards any duplicate.

The nodes support the IEEE 802.1D bridge functionality and forward frames from one port to the other, except if they already sent the same frame in that same direction.
In particular, the node will not forward a frame that it injected into the ring.

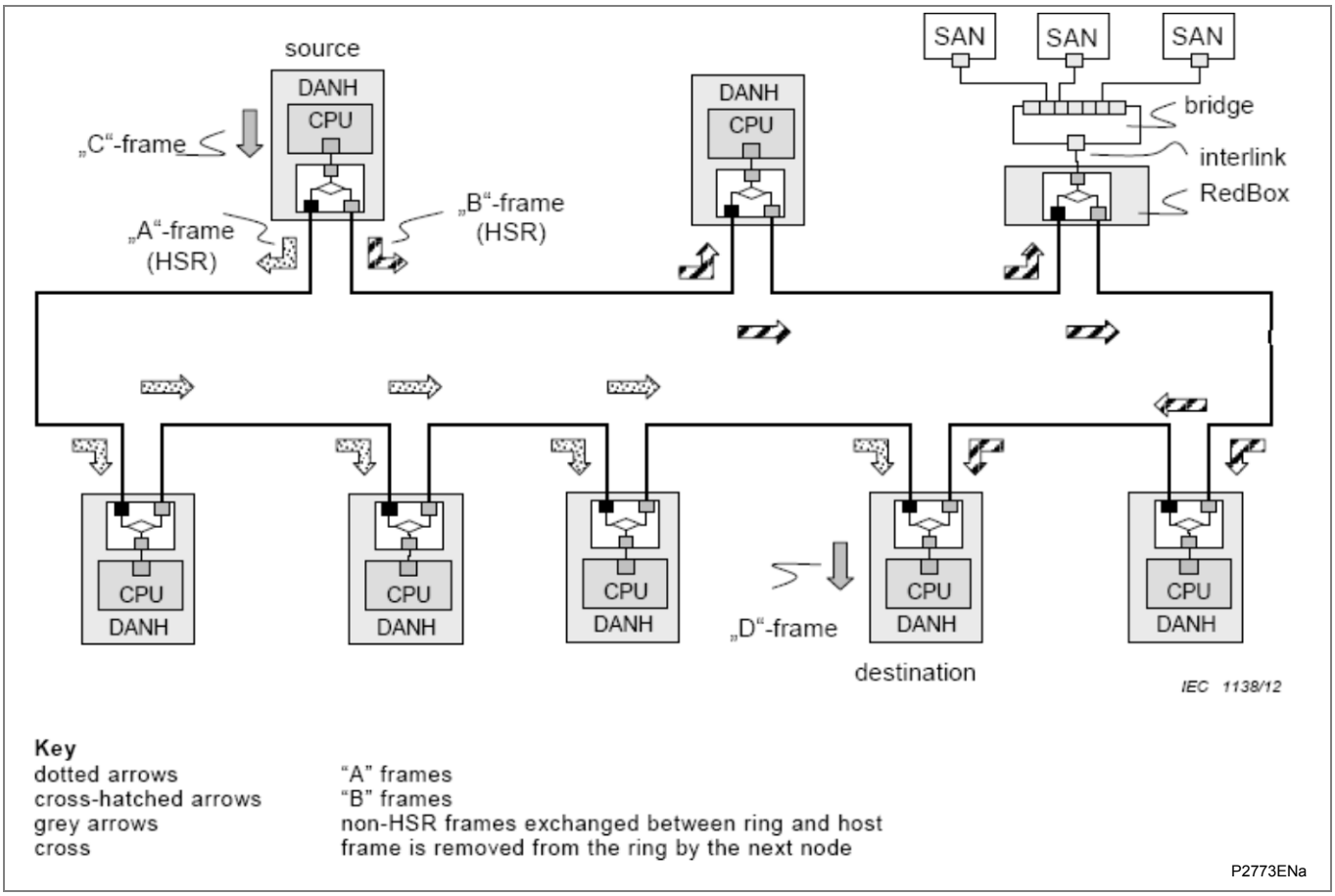

Figure 5 - HSR example of ring configuration for unicast traffic

A destination node of a unicast frame does not forward a frame for which it is the only destination, except for testing.
Frames circulating in the ring carry the HSR tag inserted by the source, which contains a sequence number. The doublet {source MAC address, sequence number} uniquely identifies copies of the same frame.
Singly Attached Nodes (SAN), for instance maintenance laptops or printers cannot be inserted directly into the ring since they have only one port and cannot interpret the HSR tag in the frames. SANs communicate with ring devices through a RedBox (redundancy box) that acts as a proxy for the SANs attached to it, as shown in Figure. Connecting non-HSR nodes to ring ports, breaking the ring, is allowed to enable configuration. Non-HSR traffic within the closed ring is supported in an optional mode.

3.2.2 Example Configuration

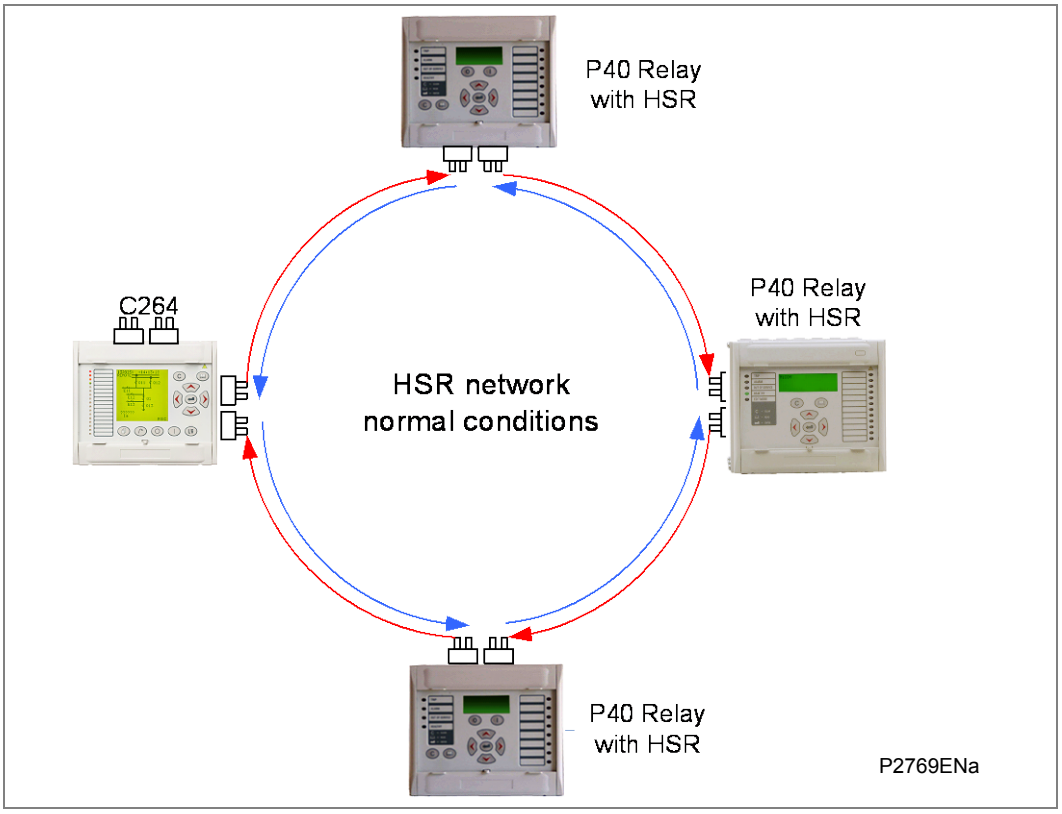

Figure 6 - HSR Relay Configuration

3.3 Generic Functions for all Redundant Ethernet Boards

The following apply to the redundant Ethernet protocols (PRP and HSR).

3.3.1 Priority Tagging

802.1p priority is enabled on all ports.

3.3.2 Simple Network Management Protocol (SNMP)

Simple Network Management Protocol (SNMP) is the network protocol developed to manage devices in an IP network. SNMP relies on a Management Information Base (MIB) that contains information about parameters to supervise. The MIB format is a tree structure, with each node in the tree identified by a numerical Object IDentifier (OID). Each OID identifies a variable that can be read or set using SNMP with the appropriate software. The information in the MIBs is standardized.

3.3.2.1 Redundant Ethernet Board MIB Structure

The IEC 62439-3 MIB provides the following objects available at the OID = .1.0.62439:

SNMP OID	Parameter name	Description
1	iso	
1	std	
1.0.62439	iec62439	
1.0.62439.2	prp	
1.0.62439.2.0	linkRedundancyEntityNotifications	
1.0.62439.2.1	linkRedundancyEntityObjects	
1.0.62439.2.1.0	lreConfiguration	
1.0.62439.2.1.0.0	lreConfigurationGeneralGroup	
1.0.62439.2.1.0.0.1	lreManufacturerName	Specifies the name of the LRE device manufacturer
1.0.62439.2.1.0.0.2	lreInterfaceCount	Total number of LREs present in this system
1.0.62439.2.1.0.1	lreConfigurationInterfaceGroup	
1.0.62439.2.1.0.1.0	lreConfigurationInterfaces	
1.0.62439.2.1.0.1.0.1	lreInterfaceConfigTable	List of PRP/HSR LREs. Each entry corresponds to one PRP/HSR Link Redundancy Entity (LRE), each representing a pair of LAN ports A and B. Basic devices supporting PRP/HSR may have only one LRE and thus one entry in the table, while more complex devices may have several entries for multiple LREs
1.0.62439.2.1.0.1.0.1.1	lreInterfaceConfigEntry	Each entry contains management information
1.0.62439.2.1.0.1.0.1.1.1	lreInterfaceConfigIndex	A unique value for each LRE
1.0.62439.2.1.0.1.0.1.1.2	lreRowStatus	Indicates the status of the LRE table entry
1.0.62439.2.1.0.1.0.1.1.3	lreNodeType	Specifies the operation mode of the LRE: PRP mode 1 (1) HSR mode (2). Note: PRP mode 0 is considered deprecated and is not supported by this revision of the MIB"
1.0.62439.2.1.0.1.0.1.1.4	lreNodeName	Specifies this LRE's node name
1.0.62439.2.1.0.1.0.1.1.5	lreVersionName	Specifies the version of this LRE's software
1.0.62439.2.1.0.1.0.1.1.6	lreMacAddress	Specifies the MAC address to be used by this LRE. MAC addresses are identical for all ports of a single LRE
1.0.62439.2.1.0.1.0.1.1.7	lrePortAdminStateA	Specifies whether the port A shall be active or not Active through administrative action (Default: active)

SNMP OID	Parameter name	Description
1.0.62439.2.1.0.1.0.1.1.8	IrePortAdminStateB	Specifies whether the port B shall be active or not Active through administrative action (Default: active)
1.0.62439.2.1.0.1.0.1.1.9	IreLinkStatusA	Shows the actual link status of the LRE's port A
1.0.62439.2.1.0.1.0.1.1.10	IreLinkStatusB	Shows the actual link status of the LRE's port B
1.0.62439.2.1.0.1.0.1.1.11	IreDuplicateDiscard	Specifies whether a duplicate discard algorithm is used at reception (Default: discard)
1.0.62439.2.1.0.1.0.1.1.12	IreTransparentReception	If removeRCT is configured, the RCT is removed when forwarding to the upper layers, only applicable for PRP LRE (Default: removeRCT)
1.0.62439.2.1.0.1.0.1.1.13	IreHsrLREMode	This enumeration is only applicable if the LRE is an HSR bridging node or RedBox. It shows the mode of the HSR LRE: (1) Default mode: The HSR LRE is in mode h and bridges tagged HSR traffic (2) Optional mode: The HSR LRE is in mode n and bridging between its HSR ports is disabled. Traffic is HSR tagged (3) Optional mode: The HSR LRE is in mode t and bridges non-tagged HSR traffic between its HSR ports (4) Optional mode: The HSR LRE is in mode u and behaves like in mode h, except it does not remove unicast messages (5) Optional mode: The HSR LRE is configured in mixed mode. HSR frames are handled according to mode h. Non-HSR frames are handled according to 802.1D bridging rules
1.0.62439.2.1.0.1.0.1.1.14	IreSwitchingEndNode	This enumeration shows which feature is enabled in this particular LRE: (1): an unspecified non-bridging node, e.g. SRP. (2): an unspecified bridging node, e.g. RSTP. (3): a PRP node/RedBox. (4): an HSR RedBox with regular Ethernet traffic on its interlink. (5): an HSR switching node. (6): an HSR RedBox with HSR tagged traffic on its interlink. (7): an HSR RedBox with PRP traffic for LAN A on its interlink. (8): an HSR RedBox with PRP traffic for LAN B on its interlink.
1.0.62439.2.1.0.1.0.1.1.15	IreRedBoxIdentity	Applicable to RedBox HSR-PRP A and RedBox HSR-PRP B. One ID is used by one pair of RedBoxes (one configured to A and one configured to B) coupling an HSR ring to a PRP network. The integer value states the value of the path field a RedBox inserts into each frame it receives from its interlink and injects into the HSR ring. When interpreted as binary values, the LSB denotes the configuration of the RedBox (A or B), and the following 3 bits denote the identifier of a RedBox pair.
1.0.62439.2.1.0.1.0.1.1.16	IreEvaluateSupervision	True if the LRE evaluates received supervision frames. False if it drops the supervision frames without evaluating. Note: LREs are required to send supervision frames, but reception is optional. Default value is dependent on implementation.
1.0.62439.2.1.0.1.0.1.1.17	IreNodesTableClear	Specifies that the Node Table is to be cleared
1.0.62439.2.1.0.1.0.1.1.18	IreProxyNodeTableClear	Specifies that the Proxy Node Table is to be cleared
1.0.62439.2.1.1	IreStatistics	
1.0.62439.2.1.1.1	IreStatisticsInterfaceGroup	
1.0.62439.2.1.1.1.0	IreStatisticsInterfaces	
1.0.62439.2.1.1.1.0.1	IreInterfaceStatsTable	List of PRP/HSR LREs. Each entry corresponds to one PRP/HSR Link Redundancy Entity (LRE), each representing a pair of LAN ports A and B and a port C towards the application/interlink. Basic devices supporting PRP/HSR may have only one LRE and thus one entry in the table, while more complex devices may have several entries for multiple LREs.
1.0.62439.2.1.1.1.0.1.1	IreInterfaceStatsEntry	An entry containing management information applicable to a particular LRE
1.0.62439.2.1.1.1.0.1.1.1	IreInterfaceStatsIndex	A unique value for each LRE
1.0.62439.2.1.1.1.0.1.1.2	IreCntTxA	Number of frames sent over port A that are HSR tagged or fitted with a PRP Redundancy Control Trailer. Only frames that are HSR tagged or do have a PRP RCT are counted. Initial value = 0.

SNMP OID	Parameter name	Description
1.0.62439.2.1.1.1.0.1.1.3	lreCntTxB	Number of frames sent over port B that are HSR tagged or fitted with a PRP Redundancy Control Trailer. Only frames that are HSR tagged or do have a PRP RCT are counted. Initial value = 0."
1.0.62439.2.1.1.1.0.1.1.4	lreCntTxC	Number of frames sent towards the application interface of the DANP or DANH or over the interlink of the RedBox. All frames (with our without PRP RCT or HSR tag) are counted. Initial value = 0
1.0.62439.2.1.1.1.0.1.1.5	lreCntErrWrongLanA	Number of frames with the wrong LAN identifier received on LRE port A. Initial value = 0. Only applicable to PRP ports.
1.0.62439.2.1.1.1.0.1.1.6	lreCntErrWrongLanB	Number of frames with the wrong LAN identifier received on LRE port B. Initial value = 0. Only applicable to PRP ports
1.0.62439.2.1.1.1.0.1.1.7	lreCntErrWrongLanC	Number of frames with the wrong LAN identifier received on the interlink of a RedBox. Only applicable to HSR RedBoxes in HSR-PRP configuration (hsrredboxprpa and hsrredboxprpb).
1.0.62439.2.1.1.1.0.1.1.8	lreCntRxA	Number of frames received on a LRE port A. Only frames that are HSR tagged or fitted with a PRP Redundancy Control Trailer are counted. Initial value = 0.
1.0.62439.2.1.1.1.0.1.1.9	lreCntRxB	Number of frames received on a LRE port B. Only frames that are HSR tagged or fitted with a PRP Redundancy Control Trailer are counted. Initial value = 0
1.0.62439.2.1.1.1.0.1.1.10	lreCntRxC	Number of frames received from the application interface of a DANP or DANH or the number of number of frames received on the interlink of a RedBox. All frames (with our without PRP RCT or HSR tag) are counted. Initial value = 0.
1.0.62439.2.1.1.1.0.1.1.11	lreCntErrorsA	Number of frames with errors received on this LRE port A. Initial value = 0
1.0.62439.2.1.1.1.0.1.1.12	lreCntErrorsB	Number of frames with errors received on this LRE port B. Initial value = 0
1.0.62439.2.1.1.1.0.1.1.13	lreCntErrorsC	Number of frames with errors received on the application interface of a DANP or DANH or on the interlink of a RedBox. Initial value = 0.
1.0.62439.2.1.1.1.0.1.1.14	lreCntNodes	Number of nodes in the Nodes Table
1.0.62439.2.1.1.1.0.1.1.15	lreCntProxyNodes	Number of nodes in the Proxy Node Table. Only applicable to RedBox. Initial value = 0.
1.0.62439.2.1.1.1.0.1.1.16	lreCntUniqueRxA	Number of entries in the duplicate detection mechanism on port A for which no duplicate was received. Initial value = 0
1.0.62439.2.1.1.1.0.1.1.17	lreCntUniqueRxB	Number of entries in the duplicate detection mechanism on port B for which no duplicate was received. Initial value = 0
1.0.62439.2.1.1.1.0.1.1.18	lreCntUniqueRxC	Number of entries in the duplicate detection mechanism on the application interface of the DAN or the interlink of the RedBox for which no duplicate was received. Initial value = 0
1.0.62439.2.1.1.1.0.1.1.19	lreCntDuplicateRxA	Number of entries in the duplicate detection mechanism on port A for which one single duplicate was received. Initial value = 0.
1.0.62439.2.1.1.1.0.1.1.20	lreCntDuplicateRxB	Number of entries in the duplicate detection mechanism on port B for which one single duplicate was received. Initial value = 0.
1.0.62439.2.1.1.1.0.1.1.21	lreCntDuplicateRxC	Number of entries in the duplicate detection mechanism on the application interface of the DAN or the interlink of the RedBox for which one single duplicate was received. Initial value = 0.
1.0.62439.2.1.1.1.0.1.1.22	lreCntMultiRxA	Number of entries in the duplicate detection mechanism on port A for which more than one duplicate was received. Initial value = 0.
1.0.62439.2.1.1.1.0.1.1.23	lreCntMultiRxB	Number of entries in the duplicate detection mechanism on port B for which more than one duplicate was received. Initial value = 0
1.0.62439.2.1.1.1.0.1.1.24	lreCntMultiRxC	Number of entries in the duplicate detection mechanism on the application interface of the DAN or the interlink of the RedBox for which more than one duplicate was received. Initial value = 0
1.0.62439.2.1.1.1.0.1.1.25	lreCntOwnRxA	Number of HSR tagged frames received on Port A that originated from this device. Frames originate from this device if the source MAC matches the MAC of the LRE, or if the source MAC appears in the proxy node table (if implemented). Applicable only to HSR. Initial value = 0.

SNMP OID	Parameter name	Description
1.0.62439.2.1.1.1.0.1.1.26	IreCntOwnRxB	Number of HSR tagged frames received on Port B that originated from this device. Frames originate from this device if the source MAC matches the MAC of the LRE, or if the source MAC appears in the proxy node table (if implemented). Applicable only to HSR. Initial value = 0.
1.0.62439.2.1.1.1.0.2	IreNodesTable	The node table (if it exists on that node) contains information about all remote LRE, which advertised themselves through supervision frames
1.0.62439.2.1.1.1.0.2.1	IreNodesEntry	Each entry in the node table (if it exists) contains information about a particular remote LRE registered in the node table, which advertised itself through supervision frames.
1.0.62439.2.1.1.1.0.2.1.1	IreNodesIndex	Unique value for each node in the LRE's node table
1.0.62439.2.1.1.1.0.2.1.2	IreNodesMacAddress	Each MAC address corresponds to a single Dual Attached Node
1.0.62439.2.1.1.1.0.2.1.3	IreTimeLastSeenA	Time in TimeTicks (1/100s) since the last frame from this remote LRE was received over LAN A. Initialized with a value of 0 upon node registration in the node table
1.0.62439.2.1.1.1.0.2.1.4	IreTimeLastSeenB	Time in TimeTicks (1/100s) since the last frame from this remote LRE was received over LAN B. Initialized with a value of 0 upon node registration in the node table.
1.0.62439.2.1.1.1.0.2.1.5	IreRemNodeType	DAN type, as indicated in the received supervision frame
1.0.62439.2.1.1.1.0.3	IreProxyNodeTable	The proxy node table (if implemented) contains information about all nodes, for which the LRE acts as a connection to the HSR/PRP network.
1.0.62439.2.1.1.1.0.3.1	IreProxyNodeEntry	Each entry in the proxy node table contains information about a particular node for which the LRE acts as a connection to the HSR/PRP network.
1.0.62439.2.1.1.1.0.3.1.1	IreProxyNodeIndex	A unique value for each node in the LRE's proxy node table.
1.0.62439.2.1.1.1.0.3.1.2	IreProxyNodeMacAddress	Each entry contains information about a particular node for which the LRE acts as a proxy for the HSR/PRP network.
1.0.62439.2.2	linkRedundancyEntityConformance	

Table 3 - Redundant Ethernet board MIB Structure

*Port number: 1 to 6 for the RJ45, port 7 management, port 8 ring

Various SNMP client software tools can be used with the MiCOM Px4x, C264 and Hx5x range. Schneider Electric recommends using an SNMP MIB browser which can perform the basic SNMP operations such as GET, GETNEXT, and RESPONSE.

Redundant agency device configuration will be required to access SNMP, refer to section 4.4 for more details.

3.3.3 Simple Network Time Protocol (SNTP)

Simple Network Time Protocol (SNTP) is supported by both the IED and the redundant Ethernet switch. SNTP is used to synchronize the clocks of computer systems over packet-switched, variable-latency data networks. A jitter buffer is used to reduce the effects of variable latency introduced by queuing in packet switched networks, ensuring a continuous data stream over the network.

The IED receives the synchronization from the SNTP server. This is done using the IP address of the SNTP server entered into the IED from the IED Configurator software.

3.3.4 Dual Ethernet Communication (Dual IPs)

3.3.4.1 Dual IP Introduction

Dual IP means the IED provides two independent IEC 61850 interfaces, and both these interfaces support MMS and Goose message.

The IED which supports Dual IP can provide the customer with more flexible network connections: two fully segregated Station BUS networks, or one Station Bus and one Process Bus (for Goose message transmission).

Dual IP is not mutually exclusive with PRP/HSR - Dual IP is automatically supported even if the IED is operate under HSR/PRP mode.

3.3.4.2 Dual IP in MiCOM

Dual IP is only supported for devices with the new Ethernet board assembly. This is shown by the model number, where the 7th digit is either hardware option Q or R. These boards have three Ethernet ports, as shown in Figure 1.

A setting is provided in the HMI to switch the operation mode between PRP/HSR/Dual IP.

Operation mode	Port 1	Port 2	Port3
PRP	Interface 1	Interface 2 (PRP)	Interface 2 (PRP)
HSR	Interface 1	Interface 2 (HSR)	Interface 2 (HSR)
Dual IP	* Interface 1 on Port 1 or Port 2		Interface 2

** Note* *In Dual IP mode, interface 1 can be available on port 1 or port 2. If both of port 1 and port 2 are connected, only port 1 will work.*

Table 4 - Ethernet ports operation mode

For each interface, the fully IEC 61850 functions (GOOSE and MMS services) are supported independently.

For outgoing GOOSE messages, you need to configure whether a message is to be transmitted across one or both Ethernet connections. You also need to configure the destination parameters such as multicast MAC address, AppID, VLAN, etc.

Two communication parameters also need to be configured for each interface (IP address, MAC address, subnet mask). For the CID which is exported from SCD file, the second interface communication parameters are not configured. This needs to be done by manually editing in the IED configurator (this being invisible by the SCD file). This process needs to be completed before the exported CID file is downloaded to the IED. (this being invisible by the SCD file).

3.3.4.3 Typical User Cases

Below for Interface 1 and Interface 2, from a functional point of view it is same. The customer has flexibility to define the functionality according their requirements.

- Both for Station Bus to have duplicated network for DCS.
- One for Station Bus and one for process bus (Goose message)

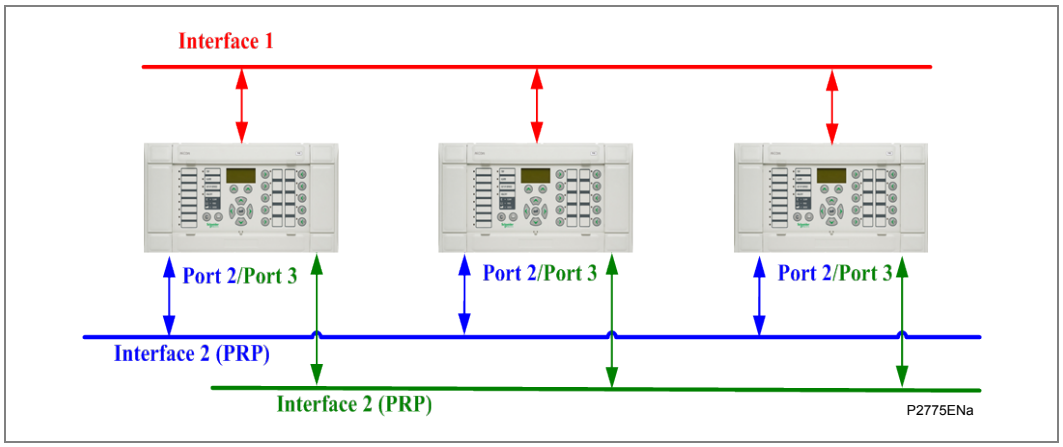

Figure 7 – PRP + Dual IP (Ethernet Mode PRP)

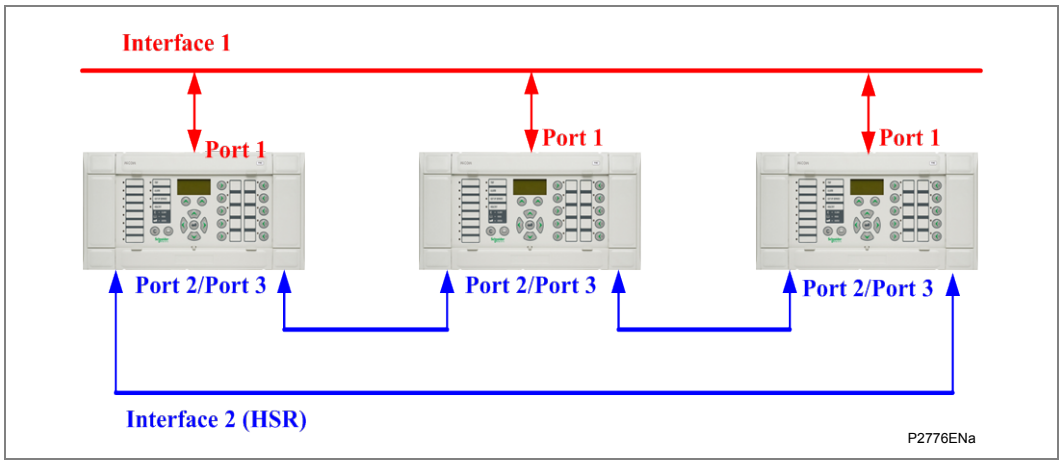

Figure 8 – HSR + Dual IP (Ethernet Mode HSR)

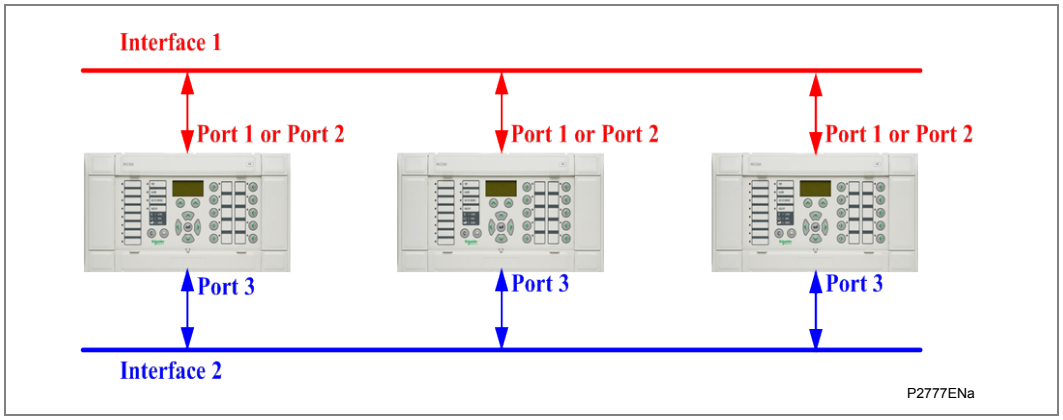

Figure 9 – Dual IP (Ethernet Mode Dual IP)

4 CONFIGURATION

The new redundant Ethernet board supports three communication operation modes. These can be achieved by change the setting in HMI. It is not necessary to flash the firmware.

Also for the two interfaces, the communication parameters need to be configured. These include the IP address, MAC address, and subnet mask, etc.

For redundant protocols, the communication parameters for redundant agency device also need to be configured.

4.1 Configuring Ethernet Communication Mode

Menu Text	Cell Add.	Default Setting	Available Setting
ETH COMM Mode	0016	Dual IP	Dual IP, PRP, HSR
This setting can only be change using the HMI, and the setting change will cause the Ethernet board reboot. Restore default setting does not apply to this setting.			

Table 5 - Ethernet communication mode setting

4.2 Configuring the IED Communication Parameters

The communication parameter for each interface is configured using the IED Configurator software in MiCOM S1 Studio. **Customers can configure these parameters according to their needs, but the IP address for these two interfaces should not be in the same subnet.**

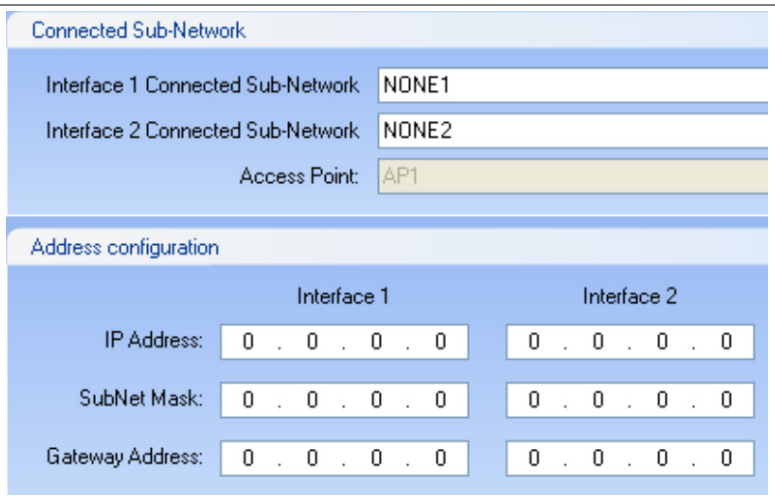

Figure 10 - Communication Parameters for two Interfaces

To use the device configuration with Courier Tunneling, for each interface, a default IP address has been applied. The default IP address for the first three bytes is fixed for each interface as below,

Interface	First three Bytes for IP address
Interface 1	169.254.0.xxx
Interface 2	169.254.1.yyy
Note	*xxx = Mod(The last byte MAC1 address, 128) + 1* *yyy = Mod(The last byte MAC2 address, 128) + 1*

Table 6 - First three bytes for default IP address

The default IP address can be found in the ***IED CONFIGURATOR*** column. Also, you can also calculate it according the MAC address label which is mounted on the rear panel of the Ethernet card.

4.3 Configuring GOOSE Publish Parameters

For outgoing GOOSE messages, you need to configure whether a message is to be transmitted over one or both Ethernet connections. You also need to configure the destination parameters including multicast MAC address, AppID, VLAN, etc.

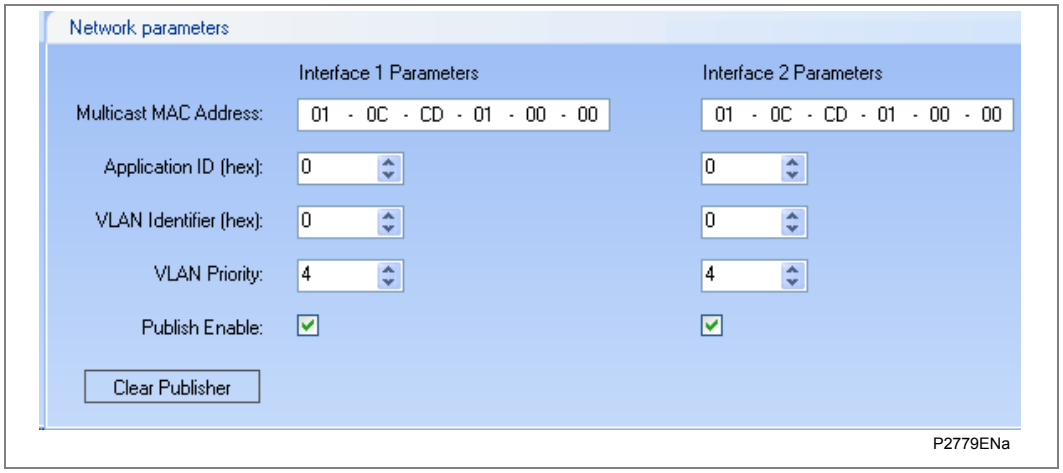

Figure 11 - Goose Publish Parameters for two Interfaces

4.4 Redundant Agency Device Configuration

The redundant agency device configuration is used by the SNMP server and only available for the device which works on PRP/HSR mode. The SNMP server can only be connected with Interface 2 (HSR/PRP port).

The following settings need to be configured in setting files:

- IP address
- Subnet Mask
- Gateway.

The MAC address is set when the device is manufactured. Also, the default IP is applied and linked to the MAC address. This default IP address can be seen in the HMI, in the Communication settings section.

The default IP address is 169.254.2.zzz.

zzz = Mod (The last byte MAC3 address, 128) + 1

5 COMMISSIONING

5.1 PRP Star Connection

The following diagram shows the Px4x IEDs with the PRP variant of Redundant Ethernet boards connected in a STAR topology. The STAR topology can have one or more high-end PRP-enabled Ethernet switches to interface with another network. The Ethernet switch is an HSR-enabled switch with a higher number of ports, which should be configured as the root bridge.

The number of IEDs that can be connected in the STAR can be up to 128.

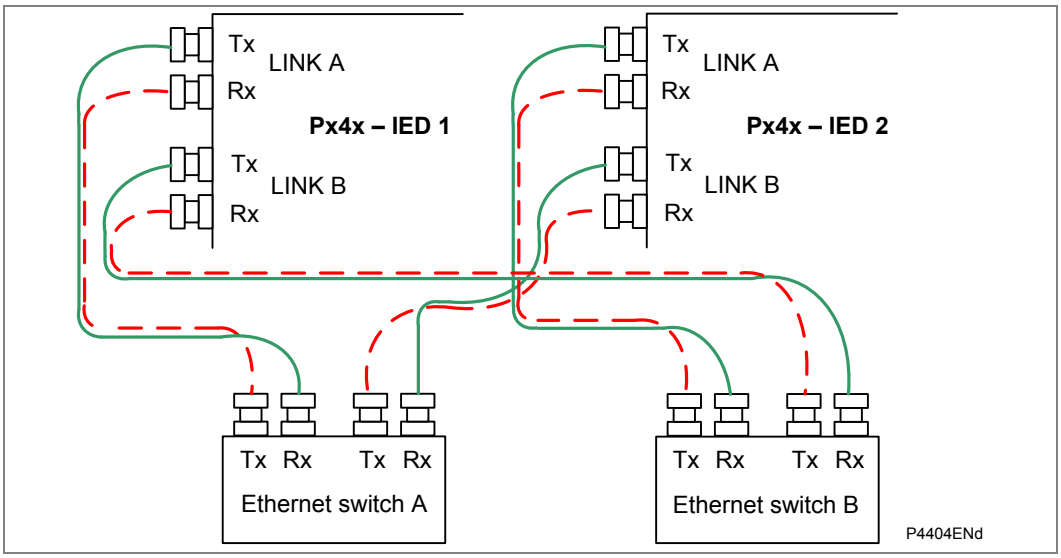

Figure 12 - PRP star connection

5.2 HSR Ring Connection

The following diagram shows the Px4x IEDs (Px4x – IED 1 to IED N) with the HSR variant of redundant Ethernet boards connected in a ring topology. The ring topology can have one or more high-end HSR-enabled Ethernet switches to interface with another network or a control center. The Ethernet switch is an HSR enabled switch with a higher number of ports.

The Ethernet switch, which is connected to the controlling PC, should be configured as the root bridge.

The number of IEDs that can be connected in the ring can be up to 128.

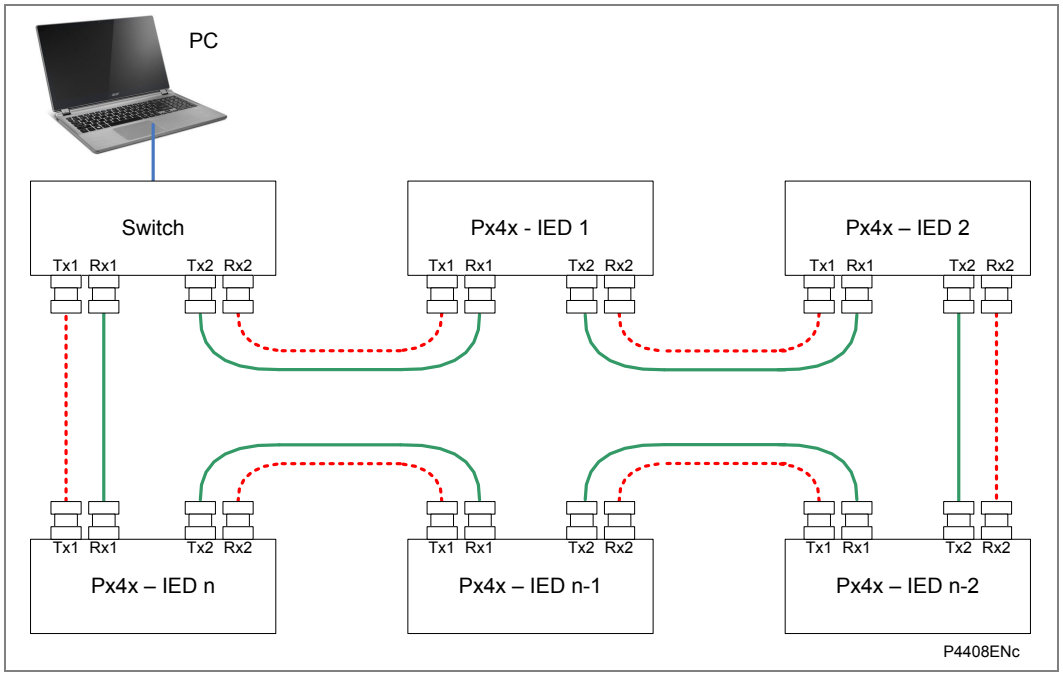

Figure 13 - HSR ring topology

The number of IEDs that can be connected in the ring can be up to 128.

6 TECHNICAL DATA

The technical data applies to a Redundant Ethernet board fitted into these MiCOM products.

- P141, P142, P143, P145
- P241, P242, P243
- P341, P342, P343, P344, P345
- P442, P443, P444, P445, P446
- P543, P544, P545, P546, P547
- P642, P643, P645
- P741, P743, P746
- P841, P849

6.1 Board Hardware

6.1.1 100 Base TX Communications Interface (in accordance with IEEE802.3 and IEC 61850)

Cable type	Screened Twisted Pair (STP)
Connector type	RJ45
Maximum distance	100m
Full Duplex	100 Mbps

Table 7 - 100 Base TX interface

6.1.2 100 Base FX Communications Interface (in accordance with IEEE802.3 and IEC 61850)

Optical fiber cable	Multi-mode 50/125 µm or 62.5/125 µm
Center wavelength	1310 nm
Connector type	LC
Maximum distance	2 km
Full Duplex	100 Mbps

Table 8 - 100 Base FX interface

6.1.3 Transmitter Optical Characteristics

(TA = -40° C to 85° C, Single +3.3 V power supply)

Parameter	Sym	Min.	Typ.	Max.	Unit
Output Optical Power 62.5/125 µm, NA = 0.275 Fiber	PO	-20	-17.0	-14	dBm avg.
Output Optical Power 50/125 µm, NA = 0.20 Fiber	PO	-23.5	-20.0	-14	dBm avg.
Optical Extinction Ratio				10	dB
Output Optical Power at Logic “0” State	PO (“0”)			-45	dBm avg.

Table 9 - Tx optical characteristics

6.1.4 Receiver Optical Characteristics

(TA = -40° C to 85° C, Single +3.3 V power supply)

Parameter	Sym	Min.	Typ.	Max.	Unit
Input Optical Power	PIN	-31		-14	dBm avg.
Note: The 10BaseFL connection will no longer be supported as IEC 61850 does not specify this interface.					

Table 10 - Rx optical characteristics

6.1.5 IRIG-B and Real-Time Clock

6.1.5.1 Performance

Year 2000:	Compliant
Real time accuracy:	< ±2 seconds / day
External clock synchronization:	Conforms to IRIG standard 200-98, format B

6.1.5.2 Features

Real time 24 hour clock settable in hours, minutes and seconds
Calendar settable from January 1994 to December 2092
Clock and calendar maintained via battery after loss of auxiliary supply
Internal clock synchronization using IRIG-B Interface for IRIG-B signal is BNC

6.1.5.3 Self-adapted Rear IRIG-B interface (Modulated or Unmodulated)

BNC plug
Isolation to SELV level
50 ohm coaxial cable

6.2 Type Tests

6.2.1 Insulation

Per EN / IEC 60255-27:
Insulation resistance > 100 MΩ at 500 Vdc
(Using only electronic/brushless insulation tester).

6.2.2 Creepage Distances and Clearances

Per EN / IEC 60255-27:
Pollution degree 3, Overvoltage category III,

6.2.3 High Voltage (Dielectric) Withstand

(EIA RS-232 ports excepted and normally-open contacts of output relays excepted).

(i) As for EN / IEC 60255-27:

2 kV rms AC, 1 minute:
Between all independent circuits.
Between independent circuits and case earth (ground).
1 kV rms AC for 1 minute, across open watchdog contacts.
1 kV rms AC for 1 minute, across open contacts of changeover output relays.
1 kV rms AC for 1 minute for all D-type EIA(RS)-232 or EIA(RS)-485 ports between the communications port terminals and protective (earth) conductor terminal.
1 kV rms AC for 1 minute between RJ45 ports and the case earth (ground).

(ii) As for ANSI/IEEE C37.90:

1.5 kV rms AC for 1 minute, across open contacts of normally open output relays.
1 kV rms AC for 1 minute, across open watchdog contacts.
1 kV rms AC for 1 minute, across open contacts of changeover output relays.

6.2.4 Impulse Voltage Withstand Test

As for EN / IEC 60255-27:

(i) Front time: 1.2 µs, Time to half-value: 50 µs,
Peak value: 5 kV, 0.5 J
Between all independent circuits.
Between independent circuits and case earth ground.

(ii) Front time: 1.2 µs, Time to half-value: 50 µs,
Peak value: 1.5kV, 0.5 J
Between RJ45 ports and the case earth (ground).
EIA(RS)-232 & EIA(RS)-485 ports and normally open contacts of output relays excepted.

6.3 ElectroMagnetic Compatibility (EMC)

6.3.1 1 MHz Burst High Frequency Disturbance Test

As for EN / IEC 60255-22-1, Class III,

Common-mode test voltage:	2.5 kV,
Differential test voltage:	1.0 kV,
Test duration:	2 s,
Source impedance:	200 Ω

(EIA(RS)-232 ports excepted).

6.3.2 100 kHz and 1MHz Damped Oscillatory Test

EN / IEC 61000-4-18:	Level 3
Common mode test voltage:	2.5 kV
Differential mode test voltage:	1 kV

6.3.3 Immunity to Electrostatic Discharge

As for EN / IEC 60255-22-2, EN / IEC 61000-4-2:

15kV discharge in air to user interface, display, communication ports and exposed metalwork.
6kV contact discharge to the screws on the front of the front communication ports.
8kV point contact discharge to any part of the front of the product.

6.3.4 Electrical Fast Transient or Burst Requirements

As for EN / IEC 60255-22-4, Class B:

±4.0 kV, 5kHz and 100kHz applied to all inputs / outputs excluding communication ports
±2.0 kV, 5kHz and 100kHz applied to all communication ports

As for EN / IEC 61000-4-4, severity level 4:

±2.0 kV, 5kHz and 100kHz applied to all inputs / outputs and communication ports excluding power supply and earth.
±4.0 kV, 5kHz and 100kHz applied to all power supply and earth port

Rise time of one pulse:	5 ns
Impulse duration (50% value):	50 ns
Burst duration:	15 ms or 0.75ms
Burst cycle:	300 ms
Source impedance:	50 Ω

6.3.5 Surge Withstand Capability

As for IEEE/ANSI C37.90.1:
4 kV fast transient and 2.5 kV oscillatory
applied directly across each output contact, optically isolated input, and power supply circuit.

6.3.6 Surge Immunity Test

As for EN / IEC 61000-4-5, EN / IEC 60255-26:

Time to half-value:	1.2 to 50 µs,
Amplitude:	4 kV between all groups and case earth (ground),
Amplitude:	2 kV between terminals of each group.
Amplitude:	1kV for LAN ports

6.3.7 Conducted/Radiated Immunity

For RTDs used for tripping applications the conducted and radiated immunity performance is guaranteed only when using totally shielded RTD cables (twisted leads).

6.3.8 Immunity to Radiated Electromagnetic Energy

Per EN / IEC 61000-4-3 and EN / IEC 60255-22-3, Class 3

Test field strength, frequency band 80 to 1000 MHz and
1.4 GHz to 2.7GHz: 10 V/m,
Test using AM: 1 kHz / 80%, Spot tests at 80, 160, 450, 900, 1850, 2150 MHz

Per IEEE/ANSI C37.90.2:

80MHz to 1000MHz, zero and 100% square wave modulated.
Field strength of 35V/m.

6.3.9 Radiated Immunity from Digital Communications

As for EN / IEC61000-4-3, Level 4:
Test field strength, frequency band 800 to 960 MHz,
and 1.4 to 2.0 GHz: 30 V/m, Test using AM: 1 kHz/80%.

6.3.10 Radiated Immunity from Digital Radio Telephones

As for EN / IEC 61000-4-3: 10 V/m, 900 MHz and 1.89 GHz.

6.3.11 Immunity to Conducted Disturbances Induced by Radio Frequency Fields

As for EN / IEC 61000-4-6, Level 3, Disturbing test voltage: 10 V.

6.3.12 Power Frequency Magnetic Field Immunity

As for EN / IEC 61000-4-8, Level 5,

100 A/m applied continuously, 1000 A/m applied for 3 s.

As for EN / IEC 61000-4-9, Level 5,

1000 A/m applied in all planes.

As for EN / IEC 61000-4-10, Level 5,

100 A/m applied in all planes at 100 kHz and 1 MHz with a burst duration of 2 s.

6.3.13 Conducted Emissions

As for CISPR 22 Class A:

Power supply:

0.15 - 0.5 MHz, 79 dBµV (quasi peak) 66 dBµV (average)
0.5 - 30 MHz, 73 dBµV (quasi peak) 60 dBµV (average)

Permanently connected communications ports:

0.15 - 0.5MHz, 97dBµV (quasi peak) 84dBµV (average)
0.5 - 30MHz, 87dBµV (quasi peak) 74dBµV (average)

6.3.14 Radiated Emissions

As for CISPR 22 Class A:

30 to 230 MHz, 40 dBµV/m at 10m measurement distance

230 to 1 GHz, 47 dBµV/m at 10 m measurement distance.

1 – 3GHz, 76dBµV/m (peak), 56dBµV/m (average) at 3m measurement distance.

3 – 5GHz, 80dBµV/m (peak), 60dBµV/m (average) at 3m measurement distance.

6.4 Environmental Conditions

6.4.1 Ambient Temperature Range

Per EN 60068-2-1 & EN / IEC 60068-2-2

Operating temperature range:	-25°C to +55°C (or -13°F to +131°F)
Storage and transit:	-25°C to +70°C (or -13°F to +158°F)

6.4.2 Ambient Humidity Range

Per EN /IEC 60068-2-78:

56 days at 93% relative humidity and +40 °C

Per EN / IEC 60068-2-14

5 cycles, -25°C to +55 °C
1°C / min rate of change

Per EN / IEC 60068-2-30

Damp heat cyclic, six (12 + 12) hour cycles, +25 to +55°C

6.4.3 Corrosive Environments

Per EN / IEC 60068-2-60, Part 2, Test Ke, Method (class) 3
Industrial corrosive environment/poor environmental control, mixed gas flow test.
21 days at 75% relative humidity and +30°C
Exposure to elevated concentrations of H_2S, (100 ppb), NO_2, (200 ppb) & Cl_2 (20 ppb).
Per EN / IEC 60068-2-52 Salt mist (7 days)
Per EN / IEC 60068-2-43 for H_2S (21 days), 15 ppm
Per EN / IEC 60068-2-42 for SO_2 (21 days), 25 ppm

6.5 EU Directives

6.5.1 EMC Compliance

As for 2004/108/EC:

Compliance to the European Commission Directive on EMC is demonstrated using a Technical File. Product Specific Standards were used to establish conformity:
EN 60255-26

6.5.2 Product Safety

Per 2006/95/EC:

Compliance to the European Commission Low Voltage Directive (LVD) is demonstrated using a Technical File. A product-specific standard was used to establish conformity.

CE EN 60255-27

6.5.3 R&TTE Compliance

Radio and Telecommunications Terminal Equipment (R&TTE) directive 99/5/EC.

Compliance demonstrated by compliance to both the EMC directive and the Low voltage directive, down to zero volts.

Applicable to rear communications ports.

Compliance demonstrated by Notified Body certificates of compliance.

6.5.4 Other Approvals

For ATEX Potentially Explosive Atmospheres directive 94/9/EC compliance, consult Schneider Electric.
For other approvals such as UL / CUL / CSA, consult Schneider Electric.

6.6 Mechanical Robustness

6.6.1 Vibration Test

Per EN / IEC 60255-21-1	Response Class 2 Endurance Class 2

6.6.2 Shock and Bump

Per EN / IEC 60255-21-2	Shock response Class 2 Shock withstand Class 1 Bump Class 1

6.6.3 Seismic Test

Per EN / IEC 60255-21-3:	Class 2

7 CORTEC

This is a generic Cortec to cover all IEDs using the **Redundant Ethernet** boards.

Variants	Order Number	1	2	3	4	5	6	7	8	9	10	11	12	13	14	15
MiCOM Protection		P														
Application/Platform:																
Feeder Management:			1	4	*											
Motor Protection:			2	4	*											
Generator Protection Relay:			3	4	*											
Distance Protection Relay:			4	4	*											
Current Differential:			5	4	*											
Transformer:			6	4	*											
Busbar:			7	4	*											
Breaker Fail:			8	4	*											
Vx Aux Rating:																
24 - 32 Vdc						9										
48 - 110 Vdc						2										
110 - 250 Vdc (100 - 240 Vac)						3										
In/Vn Rating:																
HV-LV (In = 1A/5A), (Vn = 100/120V) (8CT/1VT)							1									
HV-LV (In = 1A/5A), (Vn = 100/120V) (8CT/2VT)							2									
Hardware Options:																
Standard - no options								1								
IRIG-B only (modulated)								2								
Fibre optic converter only								3								
IRIG-B (modulated) & fibre optic converter								4								
Ethernet with 100Mits/s fibre-optic port								6								
Second Rear Comms Port (Courier EIA232/EIA485/k-bus)								7								
Second Rear Comms Port + IRIG-B (modulated) (Courier EIA232/EIA485/k-bus)								8								
Ethernet (100Mbit/s) + IRIG-B (modulated)								A								
Ethernet (100Mbit/s) + IRIG-B (unmodulated)								B								
Redundant Ethernet Self-Healing Ring, 2 multi-mode fibre ports + Modulated IRIG-B								G								
Redundant Ethernet Self-Healing Ring, 2 multi-mode fibre ports + Unmodulated IRIG-B								H								
Redundant Ethernet RSTP, 2 multi-mode fibre ports + Modulated IRIG-B								J								
Redundant Ethernet RSTP, 2 multi-mode fibre ports + Unmodulated IRIG-B								K								
Redundant Ethernet Dual-Homing Star, 2 multi-mode fibre ports + Modulated IRIG-B								L								
Redundant Ethernet Dual-Homing Star, 2 multi-mode fibre ports + Unmodulated IRIG-B								M								
Redundant Ethernet Parallel Redundancy Protocol (PRP), 2 multimode fibre ports + Modulated IRIG-B								N								
Redundant Ethernet Parallel Redundancy Protocol (PRP), 2 multimode fibre ports + Unmodulated IRIG-B								P								
Redundant Ethernet (100Mbit/s) PRP or HSR and Dual IP, 2 LC ports + 1 RJ45 port + Modulated/Unmodulated IRIG-B								Q								
Redundant Ethernet (100Mbit/s) PRP or HSR and Dual IP, 3 RJ45 ports + Modulated/Unmodulated IRIG-B								R								
Ethernet (100Mbit/s), 1 RJ45 port + Modulated/Unmodulated IRIG-B								S								
Product Specific Options :																
Size 8 (40TE) Case, 8 Optos + 8 Relays									A							
Size 8 (40TE) Case, 8 Optos + 8 Relays + RTD									B							
Size 8 (40TE) Case, 8 Optos + 8 Relays + CLIO (mA I/O)									C							
Size 8 (40TE) Case, 12 Optos + 12 Relays									D							
Size 8 (40TE) Case, 8 Optos + 12 Relays (including 4 High Break)									E							
Protocol Options:																
K-Bus/Courier										1						
Modbus										2						
IEC60870-5-103 (VDEW)										3						
DNP3.0										4						

UCA2 + Courier via rear RS485 port	5						
IEC 61850 over Ethernet and Courier via rear K-Bus/RS485 OR IEC 61850 Edition 1 and Edition 2 and Courier via rear K-Bus/RS485	6						
IEC 61850 over ethernet with CS103 rear port RS485 protocol OR IEC 61850 Edition 1 and Edition 2 and CS103 via rear port RS485	7						
DNP3.0 over Ethernet and Courier via rear K-Bus/RS485	8						
IEC 61850 Edition 1 and Edition 2 and DNP3 via rear port RS485	9						
Mounting Options:							
Panel Mounting		M					
Language Options:							
English, French, German, Spanish			0				
English, French, German, Russian			5				
Chinese, English or French via HMI, with English or French only via Communications port			C				
Software Version:							
				*	*		
Customisation:							
Default						0	
Customer Settings						A	
Design Suffix:							
							*

Notes:

PRP NOTES

CHAPTER 20

Date (month/year):	08/2015
Products covered by this chapter:	This chapter covers the specific versions of the MiCOM products listed below. This includes ***only*** the following combinations of Software Version and Hardware Suffix.
Software Version:	**B0** P14x (P141/P142/P143/P145), P34x (P342/P343/P344/P345 & P391), P74x (P741/P742/P743), P849 **B1** P64x (P642, P643 & P645), P746 **C1** P746 **D0** P24x (P241/P242/P243) **E0** P44x (P442 & P444)
Hardware Suffix:	**A** P391 **K** P44x (P441, P442, P444), P445, P74x (P741, P743) **L** P141/P142/P143, P241, P342, P642, P742 **M** P145, P242, P243, P343, P344, P345, P44x (P442, P444), P44y (P443, P446), P54x (P543, P544, P545, P546), P547, P643, P645, P741, P743, P746, P841, P849

CONTENTS

TABLES

FIGURES

Notes:

1 PARALLEL REDUNDANCY PROTOCOL (PRP) NOTES

1.1 Introduction to PRP

This section gives an introduction to the Parallel Redundancy Protocol (PRP); and how it is implemented on MiCOM-based products manufactured by Schneider Electric.

1.2 Protocols

Industrial real-time Ethernets typically need much better levels of availability and uninterrupted operation than normal office-type Ethernet solutions. For power networks, even a short loss of connectivity may result in a significant loss of functionality or impaired safety. To recover from a network failure, various redundancy schemes have been considered, including: Rapid Spanning Tree Protocol (RSTP), Media Redundancy Protocol (MRP) and Parallel Redundancy Protocol (PRP). The key properties of these are as follows:

RSTP this uses mesh-based topologies or ring topology and computes a tree, based on path costs and priorities. In case of network failure, a typical reset time for RSTP-based system is normally a few seconds.

MRP This uses ring-based topologies. In case of network failure, the network is broken into two separate lines, which are reconnected by de-blocking the previously blocked part. The guaranteed reset time for MRP protocol-based systems is typically around 100ms.

PRP this does not change the active topology as it uses two independent networks. Each message is replicated and sent over both networks. The first network node to receive it acts on it, with all later copies of the message being discarded. Importantly, these details are controlled by the low-level PRP layer of the network architecture, with the two networks being hidden from the higher level layers. Consequently, PRP-based networks are continuously available.

Power networks need to be able to respond to problems very quickly (typically in less than 10ms), and PRP is an available protocol which is robust enough to achieve this. The PRP protocol used in the MiCOM relay/IEDs is defined in the IEC62439-3 (2012) standard and is configured using the existing redundant Ethernet card(s).

1.3 PRP Summary (IEC 62439-3 Clause 4)

A summary of the main PRP features is given below:

- Ethernet redundancy method independent of any Ethernet protocol or topology (tree, ring or mesh)
- Seamless switchover and recovery in case of failure, which supports real-time communication
- Supervises redundancy continuously for better management of network devices
- Suitable for hot swap - 24 hour/365 day operation in substations
- Allows the mixing of devices with single and double network attached nodes on the same Local Area Network (LAN)
- Allows laptops and workstations to be connected to the network with standard Ethernet adapters (on double or single attached nodes)
- Particularly suited for substation automation, high-speed drives and transportation

1.4 Example of a PRP Network

Essentially a PRP network is a pair of similar Local Area Networks (LANs) which can be any topology (tree, ring or mesh). An example of a PRP network is shown in Figure 1:

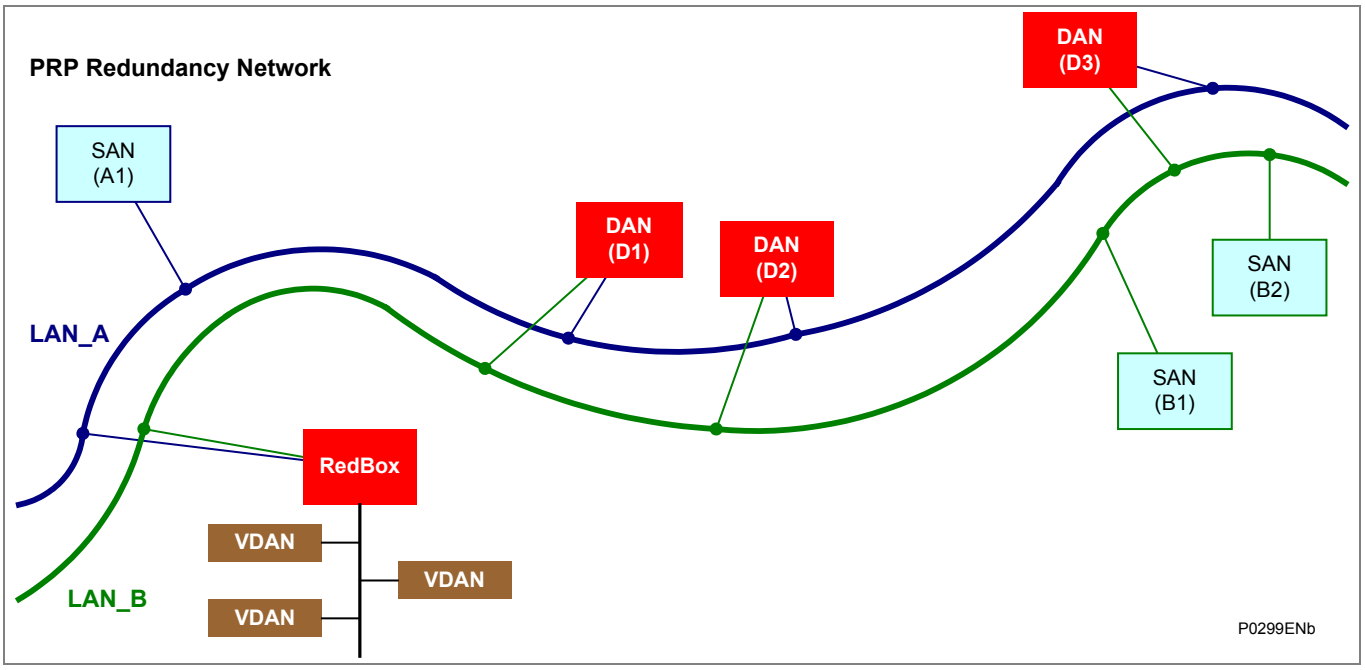

Figure 1 - PRP Redundancy Network

Figure 1 shows two similar Local Area Networks (LANs) which have various Nodes in common. The key features of these networks include:

- With the exception of a RedBox (see below), no direct cable connections can be made between the two LANs.
- Each of these LANs can have one or more Single Attached Nodes (SANs). These are normally non-critical devices that are attached only to a single network. SANs can talk to one another, but only if they are on the same LAN.
- Matched pairs of devices which are critical to the operation of the overall scheme are connected one to each network as Doubly Attached Nodes (DANs).
- To be sure that network messages (also known as frames) are transferred correctly to each DAN, each DAN must have the same Media Access Control (MAC) code and Internet Protocol (IP) address. This will also mean that TCP/IP traffic will automatically communicate with both of the paired devices, so it will be unaware of any two-layer redundancy or frame duplication issues.
- A Redundancy Box (RedBox) is used when a single interface node has to be connected to both networks. The RedBox can talk to all other nodes. So far as other nodes are concerned, the RedBox behaves like a DAN, so a SAN that is connected through a RedBox is also called a Virtual Doubly Attached Node (VDAN). The RedBox must have its own unique IP address.
- Transmission delays can be different between related Nodes of the two LANs.
- Each LAN (i.e. LAN_A and LAN_B) must be powered from a different power source and must be failure independent.

The two LANs can differ in terms of performance and topology. The redundant Ethernet interface can be made using an optical fiber connection with an LC or ST connector type or with RJ45 copper connector type. There is no need for an optical interface away from the relay.

1.5 Structure of a DAN

A MiCOM P40 relay working in PRP Mode works as a DAN within the overall network topology. Each DAN has two ports that operate in parallel. They are attached to the upper layers of the communications stack through the Link Redundancy Entity (LRE) as in Figure 2:

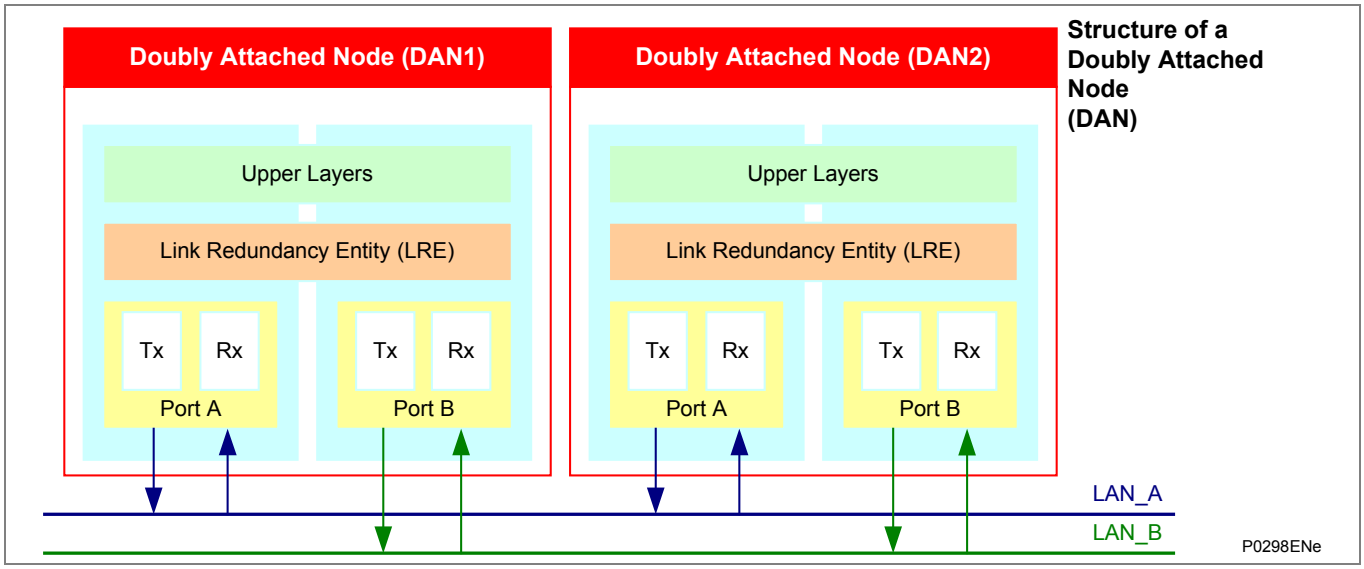

Figure 2 –Communication between two DANs (in PRP)

The LRE has two main tasks:

- handling message frames and
- management of redundancy

When an upper layer sends a frame to the LRE, the LRE replicates the frame and sends it through both its ports at nearly the same time. The two frames move through the two LANs with slightly different delays, ideally arriving at the destination node within a small time window.

When receiving frames, the LRE forwards the first frame it received to its upper layers and then discards the duplicate.

As both DAN nodes have the same MAC and IP addresses, this makes redundancy transparent to the upper layers. This allows the Address Resolution Protocol (ARP) to work in the same way as with a SAN. Accordingly, to the upper layers of a DAN, the LRE layer shows the same interface as the network adapter of a non-redundant adapter.

To manage redundancy, the LRE:

- Adds a 32-bit Redundancy Check Tag (RCT) to each frame it sends and
- Removes the RCT from each frame it receives

1.6 Communication between SANs and DANs

A SAN can be connected to any LAN and can communicate with any other SAN on the same LAN or any DAN. However, a SAN which connected to one LAN can not communicate directly to a SAN which is connected to the other LAN.

A DAN is connected to both LANs and can communicate with any RedBox or any other DANs or any SANs on either network. For communication purposes, a DAN “views” a SAN connected through a RedBox as a VDAN.

When a SAN generates a basic frame, it sends the frame only onto the LAN to which it is connected.

Originating at the SAN, a typical frame contains these parameters:

- dest_addr Destination Address
- src_addr Source Address
- type Type
- data
- fcs Frame Check Sequence (i.e. extra checksum characters added to allow error detection and correction)

The frame from the SAN is then received by the DAN; which sends the frame to its upper layers, which act accordingly.

When a DAN generates a frame, it needs to send the frame onto both of the LANs to which it is connected. When it does this, it extends the frame by adding the 32-bit Redundancy Control Trailer (RCT) into the frame.

The RCT consists of these parameters:

- 16-bit Sequence Number
- 4-bit LAN identifier, 1010 (0xA) for LAN_A and 1011 (0xB) for LAN_B
- 12-bit frame size
- PRP suffix

Note	*The Sequence number is a measure of the number of messages which have been sent since the last system reset. Each time the link layer sends a frame to a particular destination the sender increases the sequence number corresponding to that destination and sends the (nearly) identical frames over both LANs.*

Accordingly, originating at the DAN, a typical frame then contains these parameters:

- dest_addr Destination Address
- src_addr Source Address
- type Type
- lsdu Link Service Data Unit
- Padding if needed
- RCT data:
  - 16-bit sequence number:

    4-bit LAN identifier

    12-bit frame size

- 16-bit PRP suffix (0X88 0XFB)

- fcs Frame Check Sequence

LSDU	*The Link Service Data Unit (LSDU) data allows PRP frames to be distinguished from none-PRP frames.*
Padding	*After the LSDU data, there may be some data padding. This is added to frames which would otherwise be too short for conventional network traffic (minimum frame size is 64 octets).*
Size	*The frame size will vary depending on the contents of the frame and how it has been tagged by the various SANs and DANs. In VLANs, frame tags may be added or removed during transit through a switch. To make the length field independent of tagging, only the LSDU and the RCT are considered in the size.*

Figure 3 shows the frame types with different types of data.

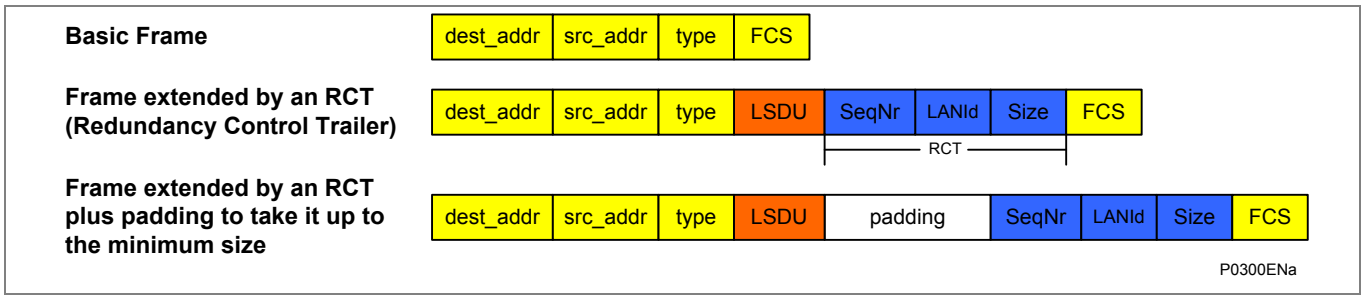

Figure 3 - Frames without and with RCT and padding

The key points about these differing frame structures is that:

- SANs do not implement any redundancy features, so they generate basic frames which SANs and DANs can understand.
- SANs can still understand the frames that come from DANs, as SANs ignore the RCT components in frames which come from DANs (a SAN cannot distinguish the RCT from the IEEE802.3 padding)
- If a DAN receives a frame which does not include the RCT component, it sends a single copy of the frame to its upper layers.
- If a DAN receives a frame which does include the RCT component, it does not send a duplicate copy of the frame to its upper layers.
- If a DANP cannot identify that the remote Node is a DAN, it inserts no RCT.

1.7 PRP Technical Data

- One VLAN tag supported.
- 128 publishers supported per receiver.
- Up to 100Mbit/s full duplex Ethernet.
- Dynamic frame memory allocation (page manager).
- Configurable duplicate detection.
- Wishbone interface for configuration and status registers.
- CPU port interface - Ethernet or Wishbone.
- Support for link-local protocols - CPU may send to specific ports only - CPU knows receive port.
- Configurable frame memory and queue length.
- Duplicate detection with configurable size and aging time.
- MAC address filtering (8 filter masks for interlink, 6 for CPU).
- Support for interfaces with or without Ethernet preamble.

Maximum Transmission Unit

According to the IEC 8802-3, the MTU (Ethernet maximum packet size) is:

- 1518 bytes without VLAN and without PRP
- 1522 bytes with VLAN and without PRP
- 1524 bytes without VLAN and with PRP
- 1528 bytes with VLAN and with PRP

Note: Check that the LAN switches setting for the MTU is at least 1528 bytes

2 PRP AND MICOM FUNCTIONS

2.1 MiCOM Products and PRP

The PRP functions being introduced as part of the overall MiCOM product range provide additional functionality, which is backwards compatible with existing Schneider Electric MiCOM equipment. This means that existing MiCOM relays/IEDS can be used on networks which use PRP functions, with no changes being made to those relays/IEDs.

The new MiCOM products that use the PRP, will interrogate other equipment to determine the equipment model number, and then use the model number to decide (at runtime), whether that particular item of equipment can support PRP or not.

MiCOM models which include the following Ethernet board assembly provide the possibility of PRP function support. This is denoted by Digit 7 where the Hardware option is N, P, Q or R, as shown in Table 1:

Hardware Option	Type	Model No format
"N" at Digit No 7	2 ST ports redundant Ethernet board (Modulated IRIG-B)	**Px4xxxNx6Mxxx8K**
"P" at Digit No 7	2 ST ports redundant Ethernet board (Un-modulated IRIG-B)	**Px4xxxPx6Mxxx8K**
"Q" at Digit No 7	2 LC + 1 RJ45 ports redundant Ethernet board (Modulated/ Un-modulated IRIG-B)	**Px4xxxQx6Mxxx8M**
"R" at Digit No 7	3 RJ45 ports redundant Ethernet board (Modulated/ Un-modulated IRIG-B)	**Px4xxxRx6Mxxx8M**

Table 1 - MiCOM model numbers for PRP options

The MiCOM relay/IED firmware has been modified to allow the PRP options to be accepted for the power-up tests in addition to the implementation of the supervision frame transmission.

2.2 MiCOM S1 Studio Software and the PRP Function

The addition of this function has no impact of the MiCOM S1 Studio support files so there is no need to upgrade any MiCOM S1 Studio software.

2.3 MiCOM Relay Configuration and the PRP Function

There is no need to change the configuration of any relay (as relays which include support for this function will be able to recognize other devices which support it).

2.4 Hardware Changes for PRP Protocol

This protocol is implemented using the existing redundant Ethernet and dual redundant Ethernet card as a starting point. The Frame management is achieved by re-programming the Field-Programmable Gate Array (FPGA).

The low-level management of the redundant frames is performed within the FPGA; this being defined as the Link Redundancy Entity (LRE). This will involve the addition of the Redundancy Check Tag (RCT) to a frame to be transmitted; this identifies the LAN and the sequence number of the message over the two networks. The FPGA is also responsible for the stripping of the RCT from received frames and discarding the duplicated messages such that only a single application frame is received by the Ethernet processor.

The LRE functionality of the supervision frame transmission is performed by the Ethernet processor card.

2.5 PRP Parameters

The Redundant Ethernet standard (IEC 62439-3:2012) defines several parameters for the PRP protocol; these being fixed at a default value within this release. The following values are set:

Parameter	Value	Description
Supervision Frame Multicast Address	01-15-4E-00-01-00	Target MAC Address for multicast supervision frame
Life Check Interval	2 seconds	Period between transmission of supervision frames
PRP Mode	Duplicate Discard	This is normal PRP mode, Duplicate address will not be supported.
Node Forget Time	60 s	This is the time after which a node entry is cleared.
Entry Forget Time	400 ms	Duration that the received message Sequence number will be held to discard a duplicate message.
Node Reboot Interval	500ms	Duration following reboot for which no PRP frames should be transmitted.

Table 2 - PRP parameter values (for PRP Protocol Version 1)

2.6 Product Implementation Features

Here is a list of the main Product Requirements for MiCOM products which support PRP:

- The MiCOM relay/IED provides two redundant Ethernet ports using PRP.
- The MiCOM relay/IED must be connected to the redundant Ethernet network as a Double Attached Node (DAN) using PRP (DAN using PRP is known as DANP)
- The redundant Ethernet interface can be made using an RJ45 or an optical fibre connection with an LC or ST connector type (Ethernet card dependent).
- The management of the PRP redundancy is transparent to the application data provided via the Ethernet interface.
- The PRP option is available with any of the existing protocol options via the Ethernet Interface (IEC61850)
- Loss of one of the LAN connections to the device does not cause any loss or degradation to the Application data over the Ethernet interface.
- The MiCOM relay/IED supports the transmission of the PRP Supervision frame at a fixed time period (LifeCheckInterval) of 2s (+/- 100ms)
- Each supervision frame includes a sequence number as defined in the IEC 62439-3:2012 specification. This is incremented for each supervision message and the value starts from zero following a system restart.
- The MiCOM relay/IED does not process received supervision frames to provide supervision of the redundant network.
- The MiCOM relay/IED does not provide for the PRP management to be configured (via either the MiCOM relay/IED HMI or the Ethernet interface). Accordingly, the default values (as defined within this document) are used for all PRP parameters.
- The performance of the Ethernet Interface is not degraded by using the PRP interface.

2.6.1 Abbreviations and Acronyms

Abbreviations / Acronyms	Meaning
CRC	Cyclic Redundancy Check
DAN	Doubly Attached Nodes
DANP	Doubly Attached Node implementing PRP
FPGA	Field-Programmable Gate Array
HMI	Human Machine Interface
IED	Intelligent Electronic Devices
IP	Internet Protocol
LAN	Local Area Network
LRE	Link Redundancy Entity
MAC	Media Access Control
MRP	Media Redundancy Protocol
PRP	Parallel Redundancy Protocol
RCT	Redundancy Check Tag
RedBox	Redundancy Box
RSTP	Rapid Spanning Tree Protocol
SAN	Singly Attached Node
TCP	Transmission Control Protocol
VDAN	Virtual Doubly Attached Node

HSR NOTES

CHAPTER 21

Date (month/year):	08/2015
Products covered by this chapter:	This chapter covers the specific versions of the MiCOM products listed below. This includes ***only*** the following combinations of Software Version and Hardware Suffix.
Software Version:	**B0** P14x (P141/P142/P143/P145), P34x (P342/P343/P344/P345 & P391), P74x (P741/P742/P743), P849 **B1** P64x (P642, P643 & P645), P746 **C1** P746 **D0** P24x (P241/P242/P243) **E0** P44x (P442 & P444)
Hardware Suffix:	**A** P391 **K** P44x (P441, P442, P444), P445, P74x (P741, P743) **L** P141/P142/P143, P241, P342, P642, P742 **M** P145, P242, P243, P343, P344, P345, P44x (P442, P444), P44y (P443, P446), P54x (P543, P544, P545, P546), P547, P643, P645, P741, P743, P746, P841, P849

CONTENTS

TABLES

FIGURES

Notes:

1 INTRODUCTION TO HSR

1.1 Introduction to High-availability Seamless Redundancy (HSR)

This section gives an introduction to the High-availability Seamless Redundancy (HSR); and how it is implemented on MiCOM-based products manufactured by Schneider Electric.

1.2 Protocols

Industrial real-time Ethernets typically need much better levels of availability and uninterrupted operation than normal office-type Ethernet solutions. For power networks, even a short loss of connectivity may result in a significant loss of functionality or impaired safety. To recover from a network failure, various redundancy schemes have been considered, including: Rapid Spanning Tree Protocol (RSTP), Media Redundancy Protocol (MRP), High-availability Seamless Redundancy (HSR). The key properties of these are as follows:

RSTP This uses mesh-based topologies or ring topology and computes a tree, based on path costs and priorities. In case of network failure, a typical reset time for RSTP-based system is normally a few seconds.

MRP This uses ring-based topologies. In case of network failure, the network is broken into two separate lines, which are reconnected by de-blocking the previously blocked part. The guaranteed reset time for MRP protocol-based systems is typically around 100ms.

HSR HSR basically uses ring topology, This Clause describes the application of the HSR principles (Clause 5) to implement a High-availability Seamless Redundancy (HSR), retaining the PRP property of zero recovery time, applicable to any topology, in particular rings and rings of rings. With respect to PRP, HSR allows to roughly halve the network infrastructure. With respect to rings based on IEEE 802.1D (RSTP), IEC 62439-2 (MRP), IEC 62439-6 (DRP) or IEC 62439-7 (RRP), the available network bandwidth for network traffic is somewhat reduced depending on the type of traffic. Nodes within the ring are restricted to be HSR-capable bridging nodes, thus avoiding the use of dedicated bridges. Singly Attached Nodes (SANs) such as laptops or printers cannot be attached directly to the ring, but need attachment through a RedBox (redundancy box).

Power networks need to be able to respond to problems very quickly (typically in less than 10ms), and HSR is an available protocol which is robust enough to achieve this. The HSR protocol used in the MiCOM relay/IED is defined in the IEC62439-3 (2012) standard and is configured using the existing redundant Ethernet card(s).

1.3 HSR Summary (IEC 62439-3 Clause 5)

A summary of the main HSR features is given below:

- HSR Ethernet redundancy method independent of any industrial Ethernet protocol and typically used in a ring topology
- Seamless switchover and recovery in case of failure, which supports real-time communication
- Supervises redundancy continuously for better management of network devices
- Suitable for hot swap, 24 hour/365 day operation in substations
- Allows laptops and workstations to be connected to the network with HSR Redbox
- Particularly suited for substation automation, high-speed drives and transportation

1.4 Example of an HSR Network

Essentially a HSR network is a ring topology. An example of a HSR network is shown in Figure 1:

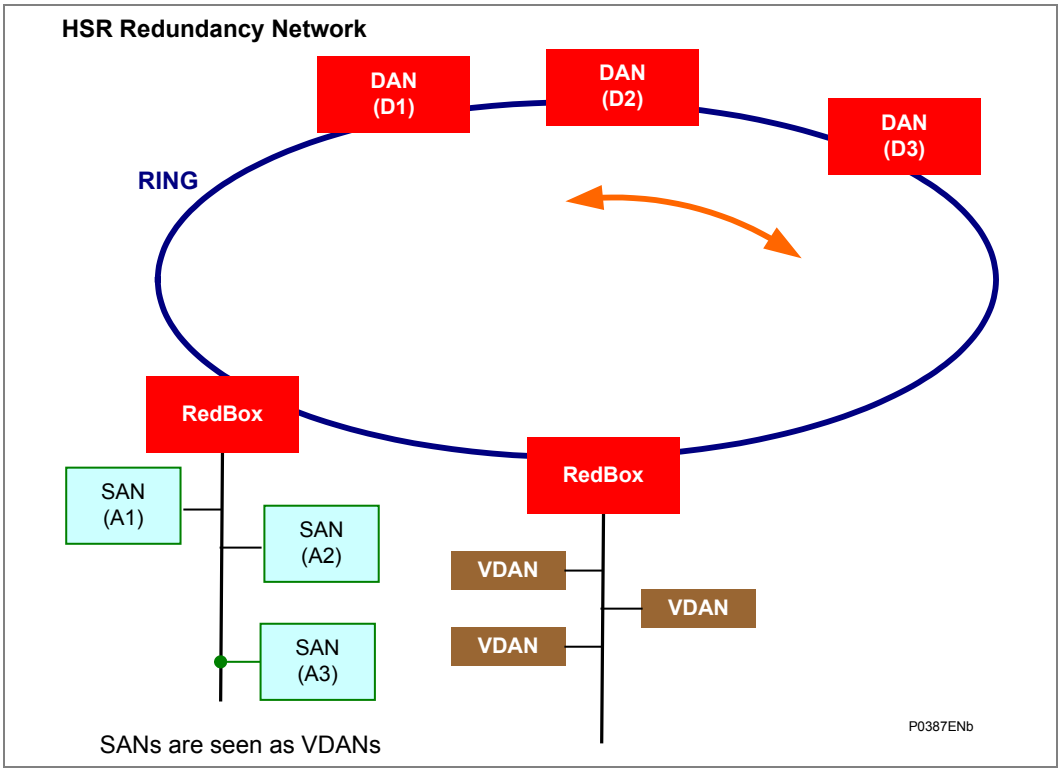

Figure 1 - HSR Redundancy Network

Figure 1 shows typical ring networks that have various Nodes in common.

The key features of the network include:

- Nodes within the ring are restricted to be HSR-capable bridging nodes, thus avoiding the use of dedicated bridges
- Singly Attached Nodes (SANs) such as laptops or printers cannot be attached directly to the ring, but need attachment through a RedBox (redundancy box)
- A simple HSR network consists of doubly attached bridging nodes, each having two ports, interconnected by full-duplex link
- A source DANH sends a frame passed from its upper layers, prefixes it by an HSR tag to identify frame duplicates and sends the frame over each port
- A destination DANH receives, in the fault-free state, two identical frames from each port within a certain interval, if it is a multicast frame, it instantaneously forwards it on the ring*, removes the HSR tag of the first frame before passing it to its upper layers and discards any duplicate.
- *:In particular, the node will not forward a frame that it injected into the ring.
- *:A destination node of a unicast frame does not forward a frame for which it is the only destination, except for testing.

1.5 Structure of a DAN

A MiCOM P40 relay working in HSR Mode works as a DAN within the overall network topology. Each DAN has two ports that operate in parallel. As in Figure 2, The two HSR ports A and B and the device port C are connected by the LRE, which includes a switching matrix allowing to forward frames from one port to the other. The switching matrix allows cut-through bridging. The Link Redundancy Entity (LRE) presents to the higher layers the same interface as a standard Ethernet transceiver would do.

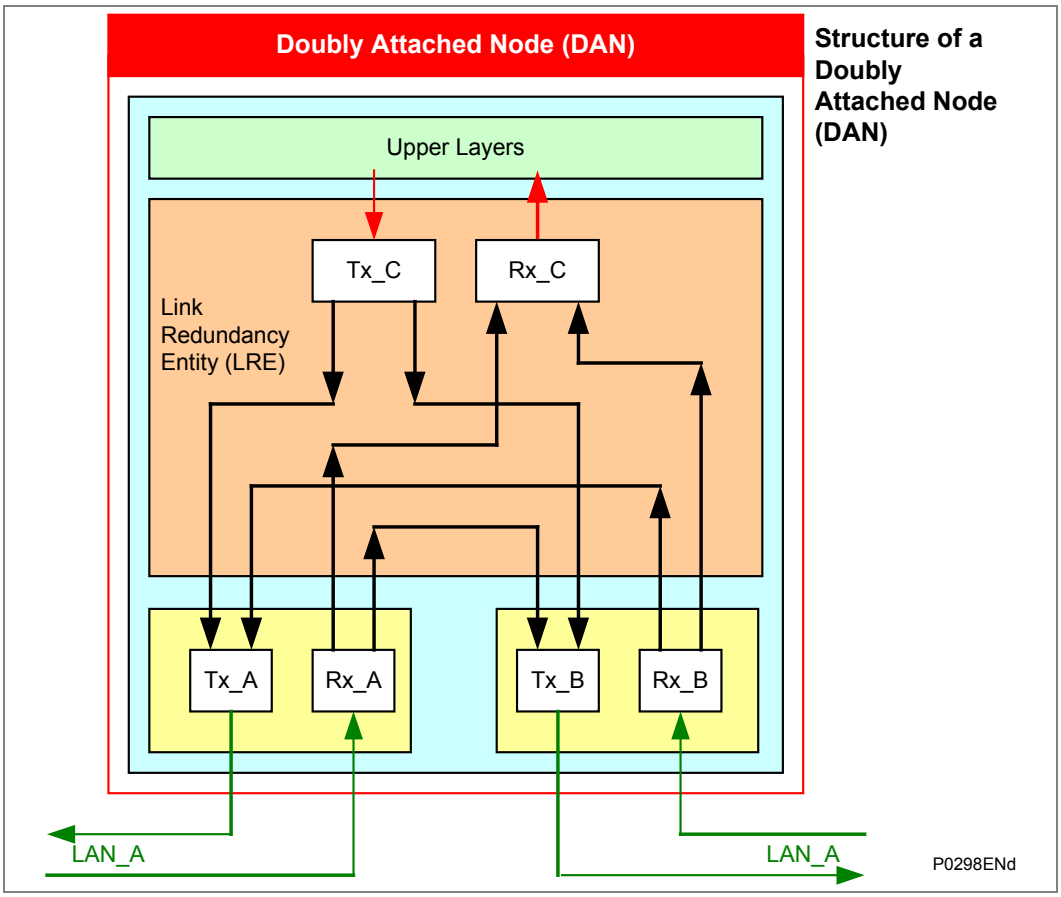

Figure 2 - DAN communication between two paths (in HSR)

DAN node is operable in HSR-tagged forwarding mode, the DAN inserts the HSR tag on behalf of its host and forwards the ring traffic, except for frames sent by the node itself. Duplicate frames and frames where the node is the unicast destination is not forwarded.

1.6 Structure of a RedBox

The RedBox has a LRE that performs the duties of the HSR protocol, in particular:

- forwards the frames received from one HSR port to the other HSR port, unless the frame receives frames addressed to its own upper protocols
- prefixes the frames sent by its own upper layers with the corresponding HSR tag before sending two copies over its HSR ports

The switching logic is incorporated into the RedBox, so interlink becomes an internal connection.

A simple RedBox is present in every node, since the LRE makes a transition to a single non-HSR host. In addition, it is usual to have more than one host in a node, since a port for maintenance often exists.

A node does not send over a port a frame that is a duplicate of a frame previously sent over that port in that same direction.

For the purpose of Duplicate Discard, a frame is identified by:

- its source MAC address;
- its sequence number.

The Duplicate Discard method forgets an entry identified by <Source MAC Address><Sequence number> after a time EntryForgetTime.

1.7 Communication between SANs, DANs and RedBoxs

Singly Attached Nodes (SANs), for instance maintenance laptops or printers cannot be inserted directly into the ring since they have only one port and cannot interpret the HSR tag in the frames. SANs communicate with ring devices through a RedBox (Redundancy Box) that acts as a proxy for the SANs attached to it.

A source DANH sends a frame passed from its upper layers, and prefixes it by an HSR tag to identify frame duplicates and sends the frame over both ports.

A destination DANH receives, in the fault-free state, two identical frames from each port within a certain interval, if it is a multicast frame, it instantaneously forwards it on the ring*,, removes the HSR tag of the first frame before passing it to its upper layers (“D”-frame) and discards any duplicate.

A typical frame contains these parameters:

- dest_addr Destination Address
- src_addr Source Address
- type Type
- data
- fcs Frame Check Sequence (i.e. extra checksum characters added to allow error detection and correction)

HSR frames are identified uniquely by their HSR tag.

The HSR tag consists of these parameters:

- 16-bit Ethertype (HSR_EtherType = 0x892F)
- 4-bit path identifier (PathId), 0000 for both HSR nodes A and B, and 0010-1111 for one of 7 PRP networks (A/B).
- 12-bit frame size (LSDUsize)
- 16-bit Sequence Number (SeqNr)

Note	*The 4-bit PathId field prevents reinjection of frames coming from one PRP network to another PRP network.*

Accordingly, a typical HSR frame then contains these parameters:

- dest_addr Destination Address
- src_addr Source Address
- HSR tag data:
  - 16-bit Ethertype (HSR_EtherType = 0x892F)
  - 4-bit path identifier
  - 12-bit frame size
  - 16-bit sequence number:
- type Type
- payload Payload
- Padding if needed
- fcs Frame Check Sequence

Padding	*After the payload data, there may be some data padding. This is added to frames which would otherwise be too short for conventional network traffic (minimum frame size is 70 octets).*
Size	*The frame size will vary depending on the contents of the frame and how it has been tagged by the various SANs and DANs. In VLANs, frame tags may be added or removed during transit through a switch. To make the length field independent of tagging, only the original LPDU and the HSR tag are considered in the size.*

Figure 3 and Figure 4 shows the frame types with different types of data.

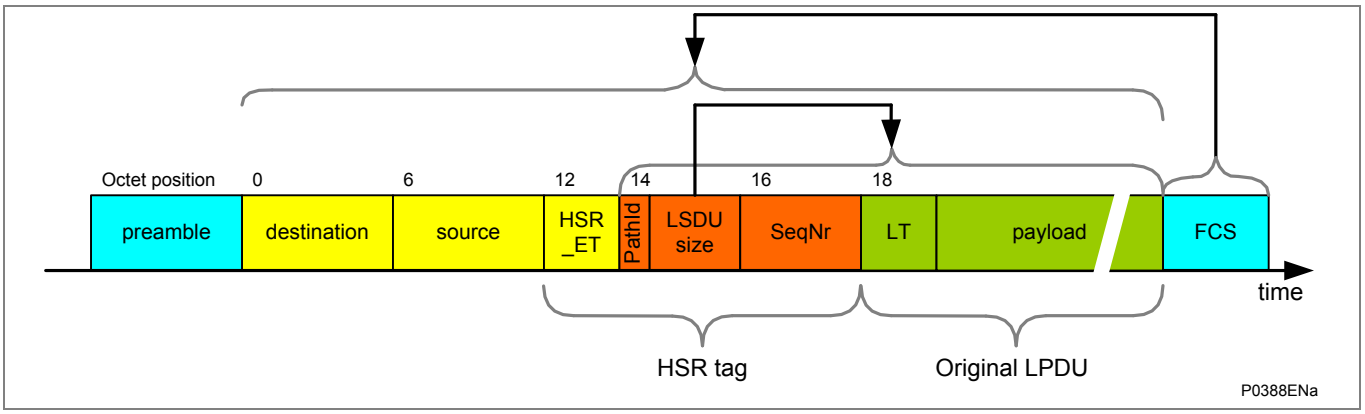

Figure 3 - HSR frame without a VLAN tag

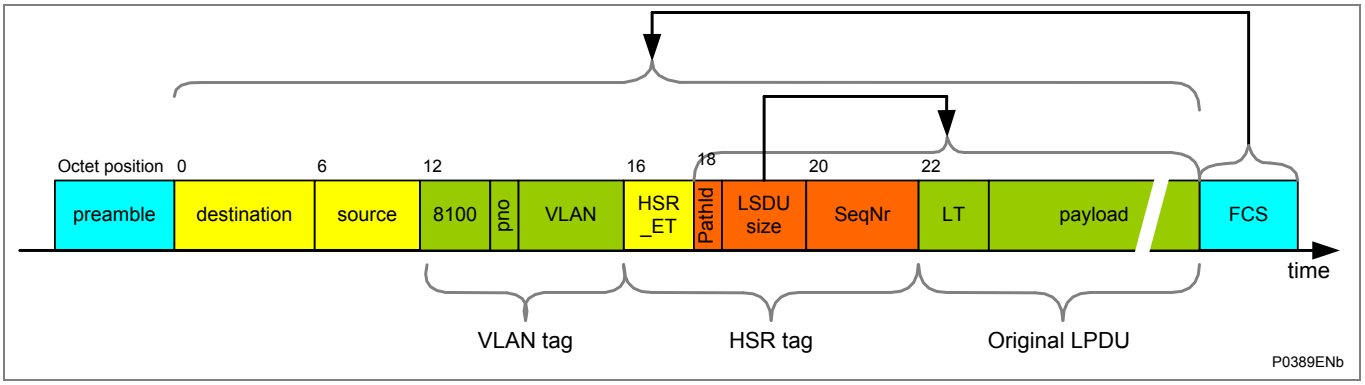

Figure 4 - HSR frame with VLAN tag

The key points about these differing frame structures are that:

- Unlike PRP, SANs cannot be attached directly to such a duplicated network unless they are able to interpret the HSR tag.
- In particular, the node will not forward a frame that it injected into the ring.
- A destination node of a unicast frame does not forward a frame for which it is the only destination, except for testing.
- DANH receiving from an HSR port, if this frame is not HSR-tagged and is a link local traffic, consume the frame and do not forward it.
- DANH receiving from an HSR port, if this frame is HSR-tagged and this node is not a destination, do not pass the frame to the link layer interface.
- A node accepts an HSR tagged frame also if the LanId does not correspond to the PortId and if the LSDUsize does not match the frame size.

1.8 HSR Technical Data

- One VLAN tag supported
- Up to 128 devices supported
- Up to 100Mbit/s full duplex Ethernet
- Dynamic frame memory allocation (page manager)
- Configurable duplicate detection
- Wishbone interface for configuration and status registers
- CPU port interface - Wishbone
- Support for link-local protocols - CPU may send to specific ports only - CPU knows receive port
- Configurable frame memory and queue length
- Duplicate detection with configurable size and aging time
- MAC address filtering (8 filter masks for interlink port, 6 for CPU port)
- Support for interfaces with or without Ethernet preamble

Limitations:

Number of IEDs on a same ring at 100Mbit/s:

Each hop (IED or RedBox) not only carries its own messages but also all the other IED messages thus the bandwidth used is proportional to the number of IEDs.

The maximum number of hops is around 20 when the GOOSE messages are highly used or 40 if the number and importance of GOOSE messages is not high.

When Precision Time Protocol («IEEE1588/IEC 61588») is used:

As the GPS receiver inaccuracy is 200ns and as each hop (IED or RedBox) can add a 50ns inaccuracy, the maximum number of hops is 16 if 1µs accuracy is required (PMU application or Process Bus)

2 HSR AND MICOM FUNCTIONS

2.1 MiCOM Products and HSR

The HSR functions being introduced as part of the overall MiCOM product range provide additional functionality, which is backwards compatible with existing Schneider Electric MiCOM equipment. This means that existing MiCOM relays/IEDS can be used on networks, which use HSR functions, with no changes being made to those relays/IEDs.

The new MiCOM products that use the HSR, will interrogate other equipment to determine the equipment model number, and then use the model number to decide (at runtime), whether that particular item of equipment can support HSR or not.

MiCOM models which include the following Ethernet board assembly provide the possibility of HSR function support. This is denoted by Digit 7 where the Hardware option is Q or R, as shown below:

Hardware Option	Type	Model No format
"Q" at Digit No 7	2 LC + 1 RJ45 ports redundant Ethernet board (Modulated/ Un-modulated IRIG-B)	**Px4xxxQx6Mxxx8M**
"R" at Digit No 7	3 RJ45 ports redundant Ethernet board (Modulated/ Un-modulated IRIG-B)	**Px4xxxRx6Mxxx8M**

Table 1 – Hardware option numbers with HSR functions

The MiCOM relay/IED firmware has been modified to allow the HSR options to be accepted for the power-up tests in addition to the implementation of the supervision frame transmission.

2.2 MiCOM S1 Studio Software and the HSR Function

The addition of this function has no impact of the MiCOM S1 Studio support files so there is no need to upgrade any MiCOM S1 Studio software.

2.3 MiCOM Relay Configuration and the HSR Function

There is no need to change the configuration of any relay (as relays which include support for this function will be able to recognize other devices which support it).

2.4 Hardware Changes for HSR Protocol

This protocol is implemented using the redundant Ethernet card as a starting point. The Frame management is achieved by programming the Field-Programmable Gate Array (FPGA).
The low-level management of the redundant frames is performed within the FPGA; this being defined as the Link Redundancy Entity (LRE). This will add the HSR tag to a frame to be transmitted. The FPGA is also responsible for the stripping of the HSR tag from received frames and discarding the duplicated messages so that only a single application frame is received by the Ethernet processor.
The LRE functionality of the supervision frame transmission is performed by the NIOS II.

The new version of the redundant Ethernet card is based on the 2072069A01 and 2072071A01 (both have modulated and un-modulated IRIG-B).

2.5 HSR Parameters

The Redundant Ethernet standard (IEC 62439-3:2012/FDIS) defines several parameters for the HSR protocol; these being fixed at a default value within this release. The following values are set:

Parameter	Value	Description
Supervision Frame Multicast Address	01-15-4E-00-01-00	Target MAC Address for multicast supervision frame
Life Check Interval	2 seconds	Period between transmission of supervision frames
HSR Mode	Duplicate Discard	This is normal HSR mode, Duplicate address will not be supported.
Node Forget Time	60 s	This is the time after which a node entry is cleared.
Entry Forget Time	400 ms	Duration that the received message Sequence number will be held to discard a duplicate message.
Node Reboot Interval	500ms	Duration following reboot for which no HSR frames should be transmitted.
MulticastFilterSize	16	Number of multicast addresses to be filtered

Table 2 - HSR parameter values

2.6 Product Implementation Features

Here is a list of the main Product Requirements for MiCOM products that support HSR:

- The MiCOM relay/IED provides two redundant Ethernet ports using HSR.
- The MiCOM relay/IED must be connected to the redundant Ethernet network as a Double Attached Node (DAN) using HSR (DAN using HSR is known as DANH)
- The redundant Ethernet interface can be made using an RJ45 or an optical fibre connection with an LC connector type.
- The management of the HSR redundancy is transparent to the application data provided via the Ethernet interface.
- The HSR option is available with any of the existing protocol options via the Ethernet Interface (IEC61850)
- Loss of one of the Node connections to the device does not cause any loss or degradation to the Application data over the Ethernet interface.
- The MiCOM relay/IED supports the transmission of the HSR Supervision frame at a fixed time period (LifeCheckInterval) of 2s (+/- 100ms)
- Each supervision frame includes a sequence number as defined in the IEC 62439-3:2012/FDIS specification. This will be incremented for each supervision message and the value will start from zero following a system restart.
- The MiCOM relay/IED support SNMP.
- The MiCOM relay/IED does not provide for the HSR management to be configured (via either the MiCOM relay/IED HMI or the Ethernet interface). Accordingly, the default values (as defined within this document) are used for all HSR parameters.
- The performance of the Ethernet Interface is not degraded by using the HSR interface.

2.6.1 Abbreviations and Acronyms

Abbreviations / Acronyms	Meaning
CRC	Cyclic Redundancy Check
DAN	Doubly Attached Nodes
DANH	Doubly Attached Node implementing HSR
FPGA	Field-Programmable Gate Array
HMI	Human Machine Interface
HSR	High-availability Seamless Redundancy
IED	Intelligent Electronic Devices
IP	Internet Protocol
LAN	Local Area Network
LRE	Link Redundancy Entity
MAC	Media Access Control
MRP	Media Redundancy Protocol
PRP	Parallel Redundancy Protocol
HSR	High-availability Seamless Redundancy
RedBox	Redundancy Box
RSTP	Rapid Spanning Tree Protocol
SAN	Singly Attached Node
TCP	Transmission Control Protocol
VDAN	Virtual Doubly Attached Node

Notes:

MENU MAPS

CHAPTER 22

Date:	08/2015
Products covered by this chapter:	This chapter covers the specific versions of the MiCOM products listed below. This includes ***only*** the following combinations of Software Version and Hardware Suffix.
Hardware Suffix:	M
Software Version:	B0
Connection Diagrams:	10P849xx (xx = 01 to 06)

CONTENTS

Notes:

1 P849 DEVICE MENU MAP (DEFAULT)

Note: This menu map is annotated with the factory default settings.

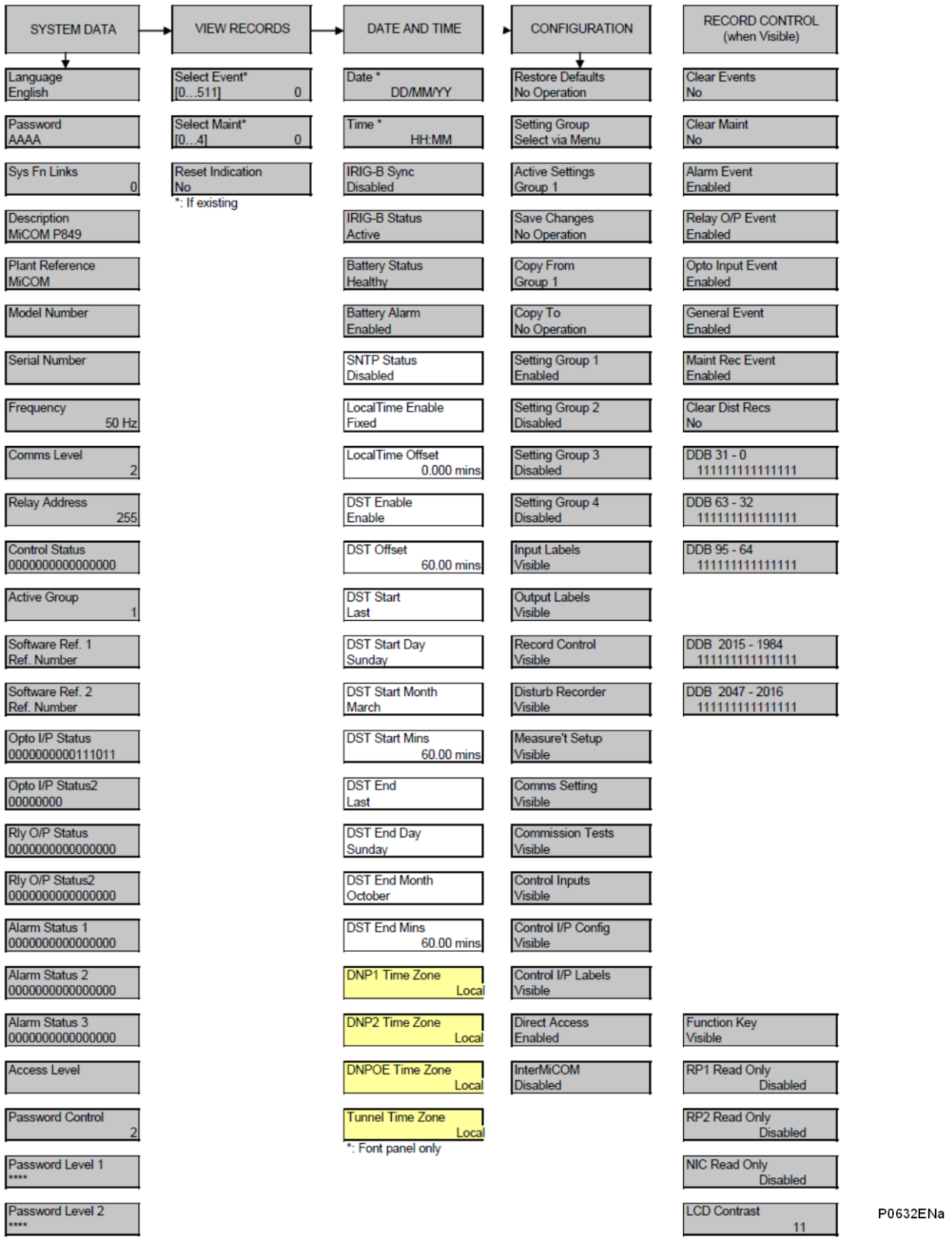

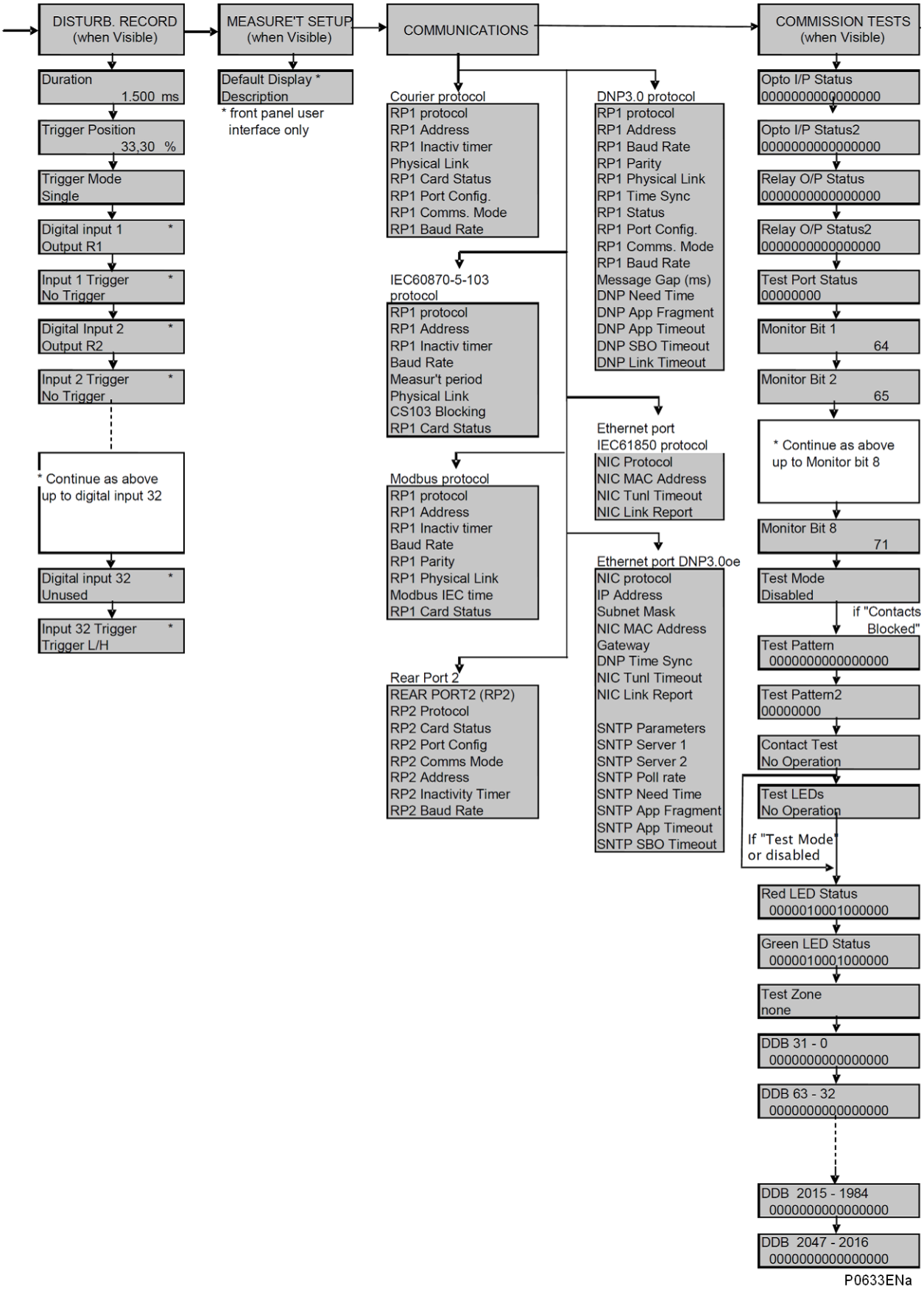
DISTURB. RECORD (when Visible)
Duration 1.500 ms
Trigger Position 33,30 %
Trigger Mode Single
Digital input 1 * Output R1
Input 1 Trigger * No Trigger
Digital Input 2 * Output R2
Input 2 Trigger * No Trigger
* Continue as above up to digital input 32
Digital input 32 * Unused
Input 32 Trigger * Trigger L/H
MEASURE'T SETUP (when Visible)
Default Display * Description
* front panel user interface only
COMMUNICATIONS
Courier protocol
RP1 protocol
RP1 Address
RP1 Inactiv timer
Physical Link
RP1 Card Status
RP1 Port Config.
RP1 Comms. Mode
RP1 Baud Rate
IEC60870-5-103 protocol
RP1 protocol
RP1 Address
RP1 Inactiv timer
Baud Rate
Measur't period
Physical Link
CS103 Blocking
RP1 Card Status
Modbus protocol
RP1 protocol
RP1 Address
RP1 Inactiv timer
Baud Rate
RP1 Parity
RP1 Physical Link
Modbus IEC time
RP1 Card Status
Rear Port 2
REAR PORT2 (RP2)
RP2 Protocol
RP2 Card Status
RP2 Port Config
RP2 Comms Mode
RP2 Address
RP2 Inactivity Timer
RP2 Baud Rate
DNP3.0 protocol
RP1 protocol
RP1 Address
RP1 Baud Rate
RP1 Parity
RP1 Physical Link
RP1 Time Sync
RP1 Status
RP1 Port Config.
RP1 Comms. Mode
RP1 Baud Rate
Message Gap (ms)
DNP Need Time
DNP App Fragment
DNP App Timeout
DNP SBO Timeout
DNP Link Timeout
Ethernet port IEC61850 protocol
NIC Protocol
NIC MAC Address
NIC Tunl Timeout
NIC Link Report
Ethernet port DNP3.0oe
NIC protocol
IP Address
Subnet Mask
NIC MAC Address
Gateway
DNP Time Sync
NIC Tunl Timeout
NIC Link Report
SNTP Parameters
SNTP Server 1
SNTP Server 2
SNTP Poll rate
SNTP Need Time
SNTP App Fragment
SNTP App Timeout
SNTP SBO Timeout
COMMISSION TESTS (when Visible)
Opto I/P Status 0000000000000000
Opto I/P Status2 0000000000000000
Relay O/P Status 0000000000000000
Relay O/P Status2 0000000000000000
Test Port Status 00000000
Monitor Bit 1 64
Monitor Bit 2 65
* Continue as above up to Monitor bit 8
Monitor Bit 8 71
Test Mode Disabled
if "Contacts Blocked"
Test Pattern 0000000000000000
Test Pattern2 00000000
Contact Test No Operation
Test LEDs No Operation
If "Test Mode" or disabled
Red LED Status 0000010001000000
Green LED Status 0000010001000000
Test Zone none
DDB 31 - 0 0000000000000000
DDB 63 - 32 0000000000000000
DDB 2015 - 1984 0000000000000000
DDB 2047 - 2016 0000000000000000
P0633ENa

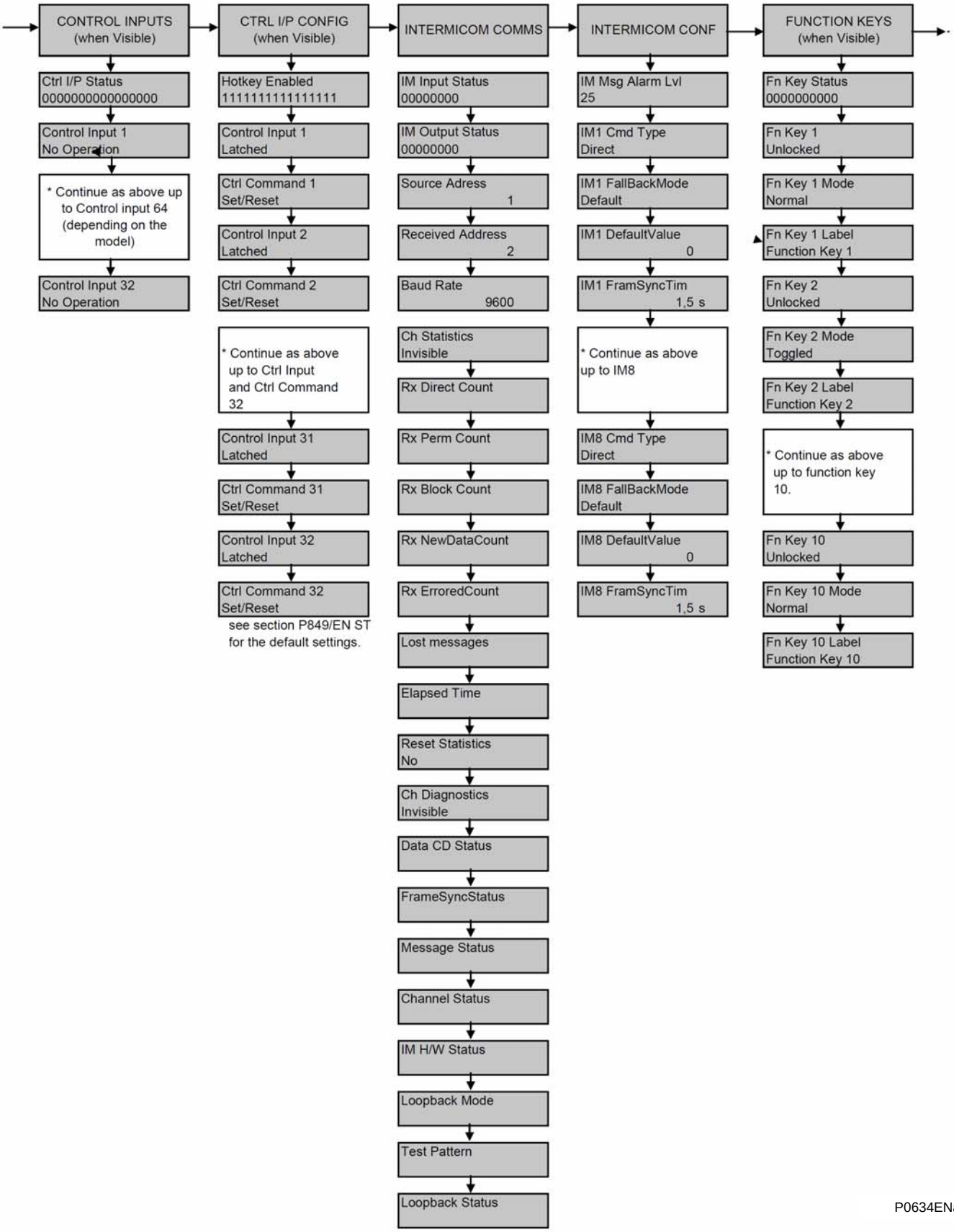
CONTROL INPUTS (when Visible)
Ctrl I/P Status 0000000000000000
Control Input 1 No Operation
* Continue as above up to Control input 64 (depending on the model)
Control Input 32 No Operation
CTRL I/P CONFIG (when Visible)
Hotkey Enabled 1111111111111111
Control Input 1 Latched
Ctrl Command 1 Set/Reset
Control Input 2 Latched
Ctrl Command 2 Set/Reset
* Continue as above up to Ctrl Input and Ctrl Command 32
Control Input 31 Latched
Ctrl Command 31 Set/Reset
Control Input 32 Latched
Ctrl Command 32 Set/Reset
see section P849/EN ST for the default settings.
INTERMICOM COMMS
IM Input Status 00000000
IM Output Status 00000000
Source Adress 1
Received Address 2
Baud Rate 9600
Ch Statistics Invisible
Rx Direct Count
Rx Perm Count
Rx Block Count
Rx NewDataCount
Rx ErroredCount
Lost messages
Elapsed Time
Reset Statistics No
Ch Diagnostics Invisible
Data CD Status
FrameSyncStatus
Message Status
Channel Status
IM H/W Status
Loopback Mode
Test Pattern
Loopback Status
INTERMICOM CONF
IM Msg Alarm Lvl 25
IM1 Cmd Type Direct
IM1 FallBackMode Default
IM1 DefaultValue 0
IM1 FramSyncTim 1,5 s
* Continue as above up to IM8
IM8 Cmd Type Direct
IM8 FallBackMode Default
IM8 DefaultValue 0
IM8 FramSyncTim 1,5 s
FUNCTION KEYS (when Visible)
Fn Key Status 0000000000
Fn Key 1 Unlocked
Fn Key 1 Mode Normal
Fn Key 1 Label Function Key 1
Fn Key 2 Unlocked
Fn Key 2 Mode Toggled
Fn Key 2 Label Function Key 2
* Continue as above up to function key 10.
Fn Key 10 Unlocked
Fn Key 10 Mode Normal
Fn Key 10 Label Function Key 10
P0634ENa

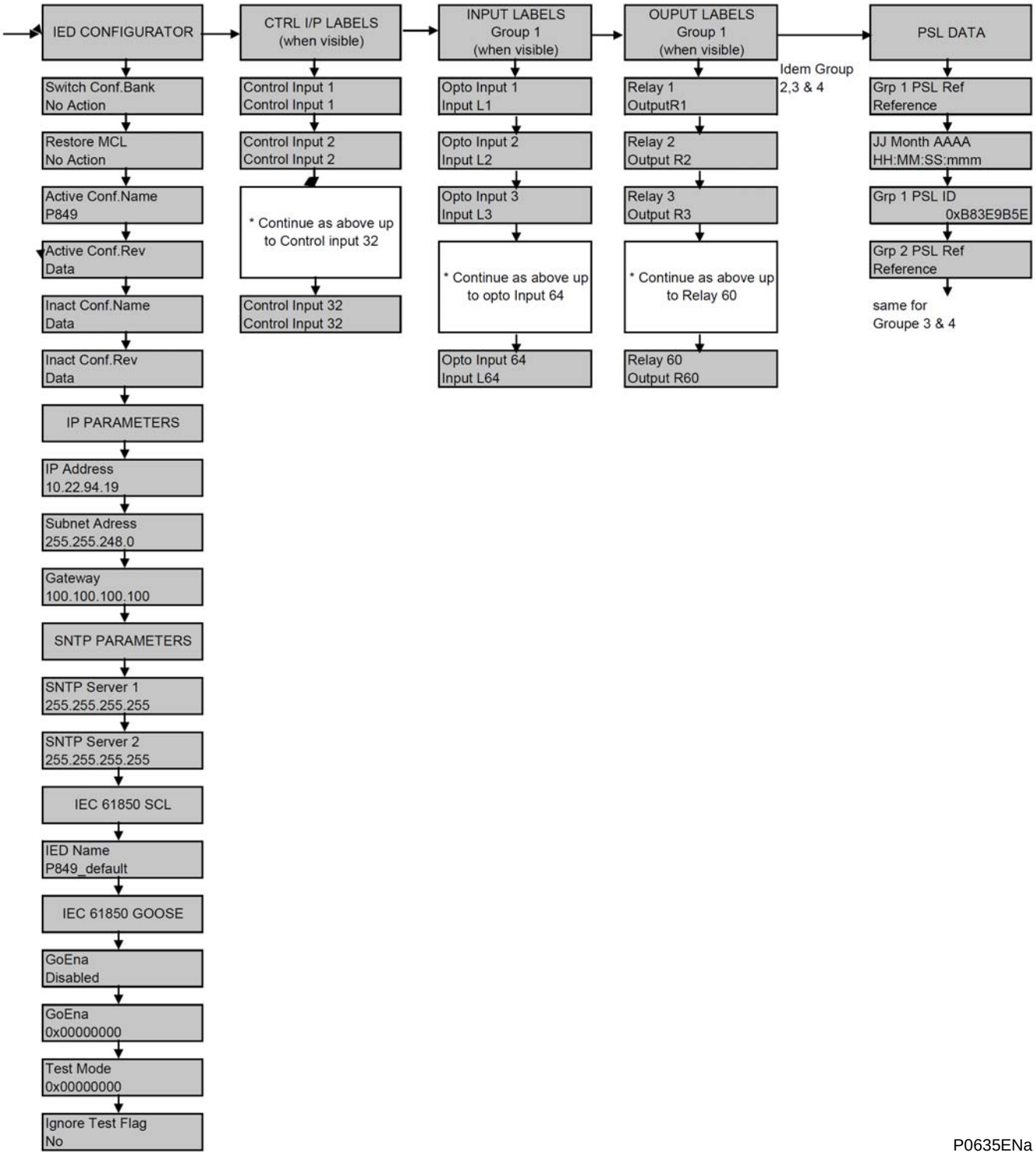
IED CONFIGURATOR
Switch Conf.Bank
No Action
Restore MCL
No Action
Active Conf.Name
P849
Active Conf.Rev
Data
Inact Conf.Name
Data
Inact Conf.Rev
Data
IP PARAMETERS
IP Address
10.22.94.19
Subnet Adress
255.255.248.0
Gateway
100.100.100.100
SNTP PARAMETERS
SNTP Server 1
255.255.255.255
SNTP Server 2
255.255.255.255
IEC 61850 SCL
IED Name
P849_default
IEC 61850 GOOSE
GoEna
Disabled
GoEna
0x00000000
Test Mode
0x00000000
Ignore Test Flag
No
CTRL I/P LABELS
(when visible)
Control Input 1
Control Input 1
Control Input 2
Control Input 2
* Continue as above up to Control input 32
Control Input 32
Control Input 32
INPUT LABELS
Group 1
(when visible)
Opto Input 1
Input L1
Opto Input 2
Input L2
Opto Input 3
Input L3
* Continue as above up to opto Input 64
Opto Input 64
Input L64
OUPUT LABELS
Group 1
(when visible)
Relay 1
OutputR1
Relay 2
Output R2
Relay 3
Output R3
* Continue as above up to Relay 60
Relay 60
Output R60
Idem Group
2,3 & 4
PSL DATA
Grp 1 PSL Ref
Reference
JJ Month AAAA
HH:MM:SS:mmm
Grp 1 PSL ID
0xB83E9B5E
Grp 2 PSL Ref
Reference
same for
Groupe 3 & 4

P0635ENa

FIRMWARE AND SERVICE MANUAL VERSION HISTORY

CHAPTER 23

Date:	08/2015
Products covered by this chapter:	This chapter covers the specific versions of the MiCOM products listed below. This includes ***only*** the following combinations of Software Version and Hardware Suffix.
Hardware Suffix:	M
Software Version:	B0
Connection Diagrams:	10P849xx (xx = 01 to 06)

CONTENTS

Page (VH**)** 23**-**

Notes:

1 VERSION HISTORY

The MiCOM S1 Studio product is updated periodically. These updates provide support for new features (such as allowing you to manage new MiCOM products, as well as using new software releases and hardware suffixes). The updates may also include fixes. **Accordingly, we strongly advise customers to use the latest Schneider Electric version of MiCOM S1 Studio.**

Relay type: MiCOM P849 …						
Software Version		Hard-ware Suffix	Original Date of Issue	Description of Changes	S1 Compat-ibility	Technical Document-ation
Major	Minor					
A0		K	Jan 2012	Original Issue. First release to production.	V3.4	P849/EN xx/A11
A0		K	Sept 2012	New Assembly power supplies: 2071964A01, 2071964A02 and 2071964A03. New opto input board: 2071960A22. New Output relay boards: (2071966A01, 2071966A01).	V3.4	P849/EN xx/B12
A0	B	K	May 2013	Parallel Redundancy Protocol (PRP) Notes added.	V3.4	P849/EN xx/C22
B0	A	M	Aug 2015	**Hardware:** Update hardware design suffix to M. The 24-48 Vdc power supply range has been changed to cover 24-32 Vdc only. Three new Ethernet boards released. **Software:** IEC 61850 Ed.2 and Ed.1 by configuration. GOOSE number and GOOSE performance enhancement. Disturbance Record LN RDRE Enhancement. Time Synchronization via LTIM/LTMS. Monitor DDB for port physical link status. High-availability Seamless Redundancy (HSR). Parallel Redundancy Protocol (PRP) Dual Ethernet communications (Dual IP). **Corrections of these issues:** Fixed and enhanced various small issues. **Note:** DNP Over Ethernet is not included in this release.	V5.0.1 or later	P849/EN M/D33

The MiCOM S1 Studio product is updated periodically. These updates provide support for new features (such as allowing you to manage new MiCOM products, as well as using new software releases and hardware suffixes). The updates may also include fixes. **Accordingly, we strongly advise customers to use the latest Schneider Electric version of MiCOM S1 Studio.**

2 RELAY SOFTWARE AND SETTING FILE SOFTWARE VERSION

	Relay Software Version	
Setting File Software Version	**A0**	**B0**
A0	✓	
B0		✓

3 RELAY SOFTWARE AND PSL FILE SOFTWARE VERSION

	Relay Software Version	
PSL File Software Version	**A0**	**B0**
A0	✓	
B0		✓

4 RELAY SOFTWARE AND MENU TEXT FILE SOFTWARE VERSION

	Relay Software Version	
Menu Text File Software Version	**A0**	**B0**
A0	✓	
B0		✓

SYMBOLS AND GLOSSARY

CHAPTER SG

Date	08/2014
Products covered by this chapter:	This chapter covers the specific versions of the MiCOM products listed below. This includes ***only*** the following combinations of Software Version and Hardware Suffix.
Hardware Suffix	All MiCOM Px4x products
Software Version	All MiCOM Px4x products

CONTENTS

TABLES

FIGURES

Notes:

1 ACRONYMS AND ABBREVIATIONS

Term	Description
<	Less than: Used to indicate an “under” threshold, such as undercurrent (current dropout).
>	Greater than: Used to indicate an “over” threshold, such as overcurrent (current overload)
A	Ampere
AA	Application Association
AC / ac	Alternating Current
ACSI	Abstract Communication Service Interface
ACSR	Aluminum Conductor Steel Reinforced
ALF	Accuracy Limit Factor
AM	Amplitude Modulation
ANSI	American National Standards Institute
AR	Auto-Reclose
ARIP	Auto-Reclose In Progress
ASCII	American Standard Code for Information Interchange
ATEX	ATEX is the Potentially Explosive Atmospheres directive 94/9/EC
AUX / Aux	Auxiliary
AV	Anti virus
AWG	American Wire Gauge
BAR	Block Auto-Reclose signal
BCD	Binary Coded Decimal
BCR	Binary Counter Reading
BDEW	Bundesverband der Energie- und Wasserwirtschaft | Startseite (i.e. German Association of Energy and Water Industries)
BMP	BitMaP – a file format for a computer graphic
BN>	Neutral over susceptance protection element: Reactive component of admittance calculation from neutral current and residual voltage.
BOP	Blocking Overreach Protection - a blocking aided-channel scheme.
BPDU	Bridge Protocol Data Unit
BRCB	Buffered Report Control Block
BRP	Beacon Redundancy Protocol
BU	Backup: Typically a back-up protection element
Business Service Layer	This layer coordinates the application, processes commands, make logical decision and calculation according to the business rules
C264	MiCOM C264 is the latest generation of modular substation computers. In addition to the traditional Input/Output (I/O) management, MiCOM C264 acts as a powerful communication gateway, an advanced measurement center and a fast automation processor. As a remote terminal unit, bay controller or protocol converter, MiCOM C264 is the compact solution to countless applications installed in demanding electromagnetic conditions. Also used to refer to a PACiS calculator.
CA	Certification Authority
CAT	Computer (C264) Administration Tool , for replacing CMT
C/O	A ChangeOver contact having normally-closed and normally-open connections: Often called a “form C” contact.
CB	Circuit Breaker
CB Aux.	Circuit Breaker auxiliary contacts: Indication of the breaker open/closed status.
CBF	Circuit Breaker Failure protection

Term	Description
CDC	Common Data Class
CET	Sepam Configurator
CF	Control Function
Ch	Channel: usually a communications or signaling channel
Check Synch	Check Synchronizing function
CIFS	Common Internet File System. Microsoft protocol use to share resources on a network.
CIP Standards	Critical Infrastructure Protection standards. NERC CIP standards have been given the force of law by the Federal Energy Regulatory Commission (FERC)
CLIO	Current Loop Input Output: 0-1 mA/0-10 mA/0-20 mA/4-20 mA transducer inputs and outputs CLI = current loop input - 0-1 mA/0-10 mA/0-20 mA/4-20 mA transducer input CLO = current loop output - 0-1 mA/0-10 mA/0-20 mA/4-20 mA transducer output
CID	Configured IED Description
CIP	Critical Infrastructure Protection standards
CLK / Clk	Clock
Cls	Close - generally used in the context of close functions in circuit breaker control.
CMC	Certificates Management over CMS. An IETF RFC for distribution and registration of public keys and certificates
CMP	Certificates Management Protocol. An IETF RFC for distribution and registration of public keys and certificates (RFC 4210)
CMV	Complex Measured Value
CNV	Current No Volts
COMFEDE	Common Format for Event Data Exchange
CPNI	Centre for the Protection of National Infrastructure
CRC	Cyclic Redundancy Check
CRL	Certificates Revocation List. A list of revoked certificates. Theoretically still valid, but forbidden by the Security Administrator or the Security Server
CRP	Cross-network Redundancy Protocol
CRV	Curve (file format for curve information)
CRx	Channel Receive: Typically used to indicate a teleprotection signal received.
Crypto Device	A small device embedding cryptographic capabilities and storage memory. It could be a smartcard, USB stick, serial dongle, etc.
CS	Cyber Security or Check Synchronism.
CSMS	Cyber Security Management System
CSV	Comma Separated Values (a file format for database information)
CT	Current Transformer
CTRL	Control - as used for the Control Inputs function
CTS	Current Transformer Supervision: To detect CT input failure.
CTx	Channel Transmit: Typically used to indicate a teleprotection signal send.
CUL	Canadian Underwriters Laboratory
CVT	Capacitor-coupled Voltage Transformer - equivalent to terminology CCVT.
CZ	Abbreviation of “Check Zone”: Zone taking into account only the feeders.
DA	Data Attribute
DAN	Dual Attached Node
DANH	Double or Dual Attached Node with HSR protocol
DANP	Double or Dual Attached Node implementing PRP

Term	Description
Data Layer	Consists of the domain-related objects and their relationships that are manipulated by the user during the interaction with the software
DAU	Data Acquisition Unit
DC	Data Concentrator
DC / dc	Direct Current
DCC	An Omicron compatible format
DCE	Data Communication Equipment
DCS	Distributed Control System
DDB	Digital Data Bus within the programmable scheme logic: A logic point that has a zero or 1 status. DDB signals are mapped in logic to customize the relay's operation.
DDR	Dynamic Disturbance Recorder
DEF	Directional Earth Fault protection: A directionalized ground fault aided scheme.
df/dt	Rate of Change of Frequency
df/dt>1	First stage of df/dt protection
DFT	Discrete Fourier Transform
DG	Distributed Generation
DHCP	Dynamic Host Configuration Protocol
DHM	Dual Homing Manager
DHP	Dual Homing Protocol
DHS	Dual Homing Star. Ethernet protocol allowing bumpless redundancy. Used with Redundant Ethernet board with dual homing protocol
Diff	Differential protection.
DIN	Deutsches Institut für Normung (German standards body)
Dist	Distance protection.
DITA	Darwinian Information Typing Architecture
DLDB	Dead-Line Dead-Bus : In system synchronism check, indication that both the line and bus are de-energised.
DLLB	Dead-Line Live-Bus : In system synchronism check, indication that the line is de-energised whilst the bus is energised.
DLR	Dynamic Line Rating
DLY / Dly	Time Delay
DMT	Definite Minimum Time
DNP	Distributed Network Protocol
DO	Data Object
DPWS	Device Profile for Web Services
DR	Disturbance Record
DREB	Dual Redundant Ethernet Board
DSP	Digital Signal Processor
DST	Daylight Saving Time
DT	Definite Time: in the context of protection elements: An element which always responds with the same constant time delay on operation. Abbreviation of "Dead Time" in the context of auto-reclose:
DTD	Document Type Definition
DTOC	Definite Time Overcurrent
DTS	Date and Time Stamp
DVC	Direct Variable Cost
DZ	Dead Zone. Area between a CT and an open breaker or an open isolator.

Term	Description
EF or E/F	Earth Fault (directly equivalent to Ground Fault)
EIA	Electronic Industries Alliance
ELR	Environmental Lapse Rate
EMC	ElectroMagnetic Compatibility
ENA	Energy Networks Association
ER	Engineering Recommendation
ESD	ElectroStatic Discharge
ESP	Electronic Security Perimeter
ESS	Embedded Security Server
ETS	Element To Secure. An ETS is an entity that represents a tool, utility or application function block that can be protected within the tool suite. It gathers a list of corresponding permissions with their set of values. This list is pre-defined and cannot be edited by any business user. A same ETS can be associated to many roles with different set of authorizations.
FAA	Ageing Acceleration Factor: Used by Loss of Life (LOL) element
FCS	Frame Check Sequence
FFail	A field failure (loss of excitation) element: Could be labeled 40 in ANSI terminology.
FFT	Fast Fourier Transform
FIR	Finite Impulse Response
FLC	Full load current: The nominal rated current for the circuit.
FLT / Flt	Fault - typically used to indicate faulted phase selection.
Fn or FN	Function
FPGA	Field Programmable Gate Array
FPS	Frames Per Second
FTP	File Transfer Protocol or Foil Twisted Pair
FTPS	FTP over TLS protocol. The classic file transfer protocol (FTP) secured using TLS tunneling.
Fusion	Project name for merge of previous 'MIRROR' and 'New SEPAM' projects
FWD, Fwd or Fwd.	Indicates an element responding to a flow in the "Forward" direction
Gen Diff	A generator differential element: Could be labeled 87G in ANSI terminology.
Gen-Xformer Diff	A generator-transformer differential element: Could be labeled 87GT in ANSI terminology.
GI	General Interrogation
GIF	Graphic Interchange Format – a file format for a computer graphic
GN>	Neutral over conductance protection element: Real component of admittance calculation from neutral current and residual voltage.
GND / Gnd	Ground: used in distance settings to identify settings that relate to ground (earth) faults.
GoCB	GOOSE Control Block
GOOSE	Generic Object Oriented Substation Event
GPS	Global Positioning System
GRP / Grp	Group. Typically an alternative setting group.
GSE	General Substation Event
GSSE	Generic Substation Status Event
GUESS	Generator Unintentional Energization at StandStill.
GUI	Graphical User Interface
HIPS	Host Intrusion Prevention System based on "white list" of accepted executables.

Term	Description
HMI	Human Machine Interface
HSR	High-Availability Seamless Ring or High Availability Seamless Redundancy
HTML	Hypertext Markup Language
I	Current
I/O	Input/Output
I/P	Input
IANA	Internet Assigned Numbers Authority
ICAO	International Civil Aviation Organization
ICD	IED Capability Description
ID	Identifier or Identification. Often a label used to track a software version installed.
IDMT	Inverse Definite Minimum Time. A characteristic whose trip time depends on the measured input (e.g. current) according to an inverse-time curve.
IEC	International Electro-technical Commission
IED	Intelligent Electronic Device - a term used to describe microprocessor-based controllers of power system equipment. Common types of IEDs include protective relaying devices, load tap changer controllers, circuit breaker controllers, capacitor bank switches, recloser controllers, voltage regulators, etc.
IEEE	Institute of Electrical and Electronics Engineers
IET	IED Engineering ToolSuite for FUSION project. Similar to SET but dedicated to IED. or IED Engineering Tool.
IETF	Internet Engineering Task Force
IID	Instantiated/Individual IED Description
IIR	Infinite Impulse Response
Inh	An Inhibit signal
Inst	An element with Instantaneous operation: i.e. having no deliberate time delay.
IP	Internet Protocol
IRIG	InterRange Instrumentation Group
ISA	International Standard Atmosphere
ISA	Instrumentation Systems and Automation Society
ISO	International Standards Organization
JPEF	Joint Photographic Experts Group – a file format for a computer graphic
L	Live
LAN	Local Area Network
LCB	Log Control Block
LCD	Liquid Crystal Display: The front-panel text display on the relay.
LD	Level Detector: An element responding to a current or voltage below its set threshold. Or Logical Device
LDAP	Lightweight Directory Access Protocol
LDOV	Level Detector for OverVoltage
LDUV	Level Detector for UnderVoltage
LED	Light Emitting Diode: Red or green indicator on the front-panel.
LLDB	Live-Line Dead-Bus : In system synchronism check, indication that the line is energized whilst the bus is de-energized.
Ln	Natural logarithm
LN	Logical Node
LOGS	All the operations related to the security (connection, configuration…) are automatically caught in events that are logged in order to provide a good visibility of the previous actions to the security administrators.

Term	Description
LoL	A Loss of Load scheme, providing a fast distance trip without needing a signaling channel.
LPDU	Link Protocol Data Unit
LPHD	Logical Physical Device
LRE	Link Redundancy Entity
MAC	Media Access Control or Mandatory Access Control.
MC	MultiCast
MCB	Miniature Circuit Breaker
MIB	Management Information Base
MICS	Model Implementation Conformance Statement
MIDOS	Modular Integrated DrawOut System
MMF	Magneto-Motive Force
MMS	Manufacturing Message Specification
MRP	Media Redundancy Protocol
MU	Merging Unit
MV	Measured Value
N	Neutral
N/A	Not Applicable
N/C	A Normally Closed or “break” contact: Often called a “form B” contact.
N/O	A Normally Open or “make” contact: Often called a “form A” contact.
NERC	North American Reliability Corporation
NERO	NERC Electric Reliability Organization (ERO) certified by the Federal Energy Regulatory Commission to establish and enforce reliability standards for the bulk-power system.
NIC	Network Interface Card: i.e. the Ethernet card of the IED
NIST	National Institute of Standards and Technology
NPS	Negative Phase Sequence
NTP	The Network Time Protocol (NTP) is a protocol for synchronizing the clocks of computer systems.
NVD	Neutral Voltage Displacement: Equivalent to residual overvoltage protection.
NXT	Abbreviation of “Next”: In connection with hotkey menu navigation.
o	A small circle on the input or output of a logic gate: Indicates a NOT (invert) function.
O/C	Overcurrent
O/P	Output
OCB	Oil Circuit Breaker
OCSP	Online Certificate Status Protocol. An IETF RFC for online verification of certificates by servers (RFC 2560).
OID	Object IDentifier
Opto	An Optically coupled logic input. Alternative terminology: binary input.
OSI	Open Systems Interconnection
PAP	Policy Administration Point. Software entity that manage the security Policy
PCB	Printed Circuit Board
PCT	Protective Conductor Terminal (Ground)
PDC	Phasor Data Concentrator
PDP	Policy Decision Point. Software entity that evaluates the applicable policy and takes an authorization decision
PEP	Policy Enforcement Point. Software entity that performs access control and enforces authorization decision.
Ph	Phase - used in distance settings to identify settings that relate to phase-phase faults.

Term	Description
PICS	Protocol Implementation Conformance Statement
PIP	Policy Information Point. Software entity acting as an information source for the PDP.
PKI	Public Key infrastructure
PMU	Phasor Measurement Unit
PNG	Portable Network Graphics – a file format for a computer graphic
Pol	Polarize - typically the polarizing voltage used in making directional decisions.
POR	A Permissive OverReaching transfer trip scheme (alternative terminology: POTT).
POTT	A Permissive Overreaching Transfer Trip scheme (alternative terminology: POR).
PRP	Parallel Redundancy Protocol
PSB	Power Swing Blocking, to detect power swing/out of step functions (ANSI 78).
PSL	Programmable Scheme Logic: The part of the relay's logic configuration that can be modified by the user, using the graphical editor within MiCOM S1 Studio software.
PSlip	A Pole slip (out-of-step - OOS) element: could be labeled 78 in ANSI terminology.
PSP	Physical Security Perimeter
PSTN	Public Switched Telephone Network (RTC in French)
PT	Power Transformer
PTP	Precision Time Protocol
PUR	A Permissive UnderReaching transfer trip scheme (alternative terminology: PUTT).
Q	Quantity defined as per unit value
Qx	Isolator number x (from 1 to 6).
R	Resistance
RA	Registration Authority
R&TTE	Radio and Telecommunications Terminal Equipment
RBAC	Role Based Access Control. Authentication and authorization mechanism based on roles granted to a user. Roles are made of rights, themselves being actions that can be applied on objects. Each user's action is authorized or not based on his roles
RBN	Lead burden for the neutral.
RBPh	Lead burden for the phases.
RCA	Relay Characteristic Angle - The center of the directional characteristic.
RCB	Report Control Block
RCT	Redundancy Control Trailer or Redundancy Check Tag
REB	Redundant Ethernet Board
RedBox	Redundancy Box
REF	Restricted Earth Fault
Rev.	Indicates an element responding to a flow in the "reverse" direction
RMS / rms	Root mean square. The equivalent a.c. current: Taking into account the fundamental, plus the equivalent heating effect of any harmonics.
Roles	A role is a logical representation of a person activity. This activity authorizes or forbids operations within the tool suite thanks to permissions that are associated to the role. A role needs to be attached to a user account to have a real purpose.
RP	Rear Port: The communication ports on the rear of the IED
RS232	A common serial communications standard defined by the EIA
RS485	A common serial communications standard defined by the EIA (multi-drop)
RST or Rst	Reset generally used in the context of reset functions in circuit breaker control.
RSTP	Rapid Spanning Tree Protocol. Ethernet protocol allowing bumpless redundancy. Used with Redundant Ethernet board.

Term	Description
RTCS	Real Time Certificate Status. Facility. An IETF draft for online certificates validation.
RTD	Resistance Temperature Device
RTU	Remote Terminal Unit
Rx	Receive: Typically used to indicate a communication transmit line/pin.
SAM	Security Administration Module. Device in charge of security management on an IP-over-Ethernet network.
SAN	Singly or Single Attached Node
SAS	Substation Automation Solutions / System
SAT	Security Administration Tool TSF based application used to define and create security configuration
SAU	Security Administration Utility
SBS	Straight Binary Second
SC	Synch-Check or system Synchronism Check.
SCADA	Supervisory Control and Data Acquisition
SCD	Substation Configuration Description
SCEP	Simple Certificate Enrollment Protocol. An IETF draft for distribution and registration of public keys and certificates
SCL	Substation Configuration Language. In IEC 61850, the definition of the configuration files.
Scopes	The nodes of the hierarchy are viewed as scopes and can be secured independently. Each node could include some roles and user accounts defined in the tool suite and create a specific security policy.
SCSM	Specific Communication Service Mappings: In IEC 61850, the SCSMs define the actual information exchange mechanisms currently used (e.g. MMS).
SCU	Substation Control Unit
SCVP	Server-based Certificate Validation Protocol. An IETF RFC for online certificates validation.
SDEF	Sensitive Differential Earth Fault Protection
Secured IED	Devices embedding security mechanisms defined in the security architecture document
Security Administrator	A user of the system granted to manage its security
SEF	Sensitive Earth Fault Protection
Sen	Sensitive
SET	System Engineering Tools. New Tools in place of SCE and SMT, to deal with complete life cycle for Systems (design, realization, testing, commissioning, maintenance).
SFTP	A Secured File Transfer Protocol based on SSH.
SGCB	Setting Group Control Block
SHM	Self-Healing Manager
SHP	Self Healing Protocol
SHR	Self Healing Ring: Ethernet protocol allowing bumpless redundancy. Used with Redundant Ethernet board with self-healing protocol.
SIR	Source Impedance Ratio
SLA	Service Level Agreement
SMB	Server Message Block. Microsoft protocol for network resources sharing. Called CIFS on NT
SMT	Substation Management Tool (previously used on PACIS project)
SMTP	Simple Mail Transfer Protocol (SMTP) is an Internet standard for electronic mail (e-mail) transmission across Internet Protocol (IP) networks.
SMV	Sampled Measured Values
SNMP	Simple Network Management Protocol (SNMP) is an "Internet-standard protocol for managing devices on IP networks
SNTP	Simple Network Time Protocol

Term	Description
SOA	Service Oriented Architecture
SOAP	Simple Object Access Protocol
SOC	Second of Century
SOTF	Switch on to Fault protection. Modified protection on manual closure of the circuit breaker.
SP	Single pole.
SPAR	Single pole auto-reclose.
SPC	Single Point Controllable
SPDT	Single Pole Dead Time. The dead time used in single pole auto-reclose cycles.
SPS	Single Point Status
SQRT	Square Root
SSD	Solid State Device
SSH	Secured Shell. A secured encrypted network protocol for remote administration of computers
SSL	Secured Socket Layer or Source Impedance Ratio or See TLS (TLS is based on SSLv3).
SSO	Single Sign On
STP	Shielded Twisted Pair or Spanning Tree Protocol
SUI	Substation User Interface
SV	Sampled Values
SVC	Sampled Value Model
SVM	Sampled Value Model
TAF	Turbine Abnormal Frequency
TAT	Transfer Administration Tool
TBD	To Be Defined
TCP	Transmission Control Protocol
TCS	Second of Century
TCS	Trip Circuit Supervision
TD	Time Dial. The time dial multiplier setting: Applied to inverse-time curves (ANSI/IEEE).
TE	Unit for case measurements: One inch = 5TE units
THD	Total Harmonic Distortion
TICS	Technical Issues Conformance Statement
TIFF	Tagged Image File Format – a file format for a computer graphic
TLS	Transport Layer Security network protocol successor to SSL. Or Transport Layer Security. Creates encrypted tunnel for TCP connections. Can guarantee authentication when used in a PKI.
TMS	Time Multiplier Setting: Applied to inverse-time curves (IEC)
TOC	Trip On Close ("line check") protection. Offers SOTF and TOR functionality.
TOR	Trip On Reclose protection. Modified protection on autoreclosure of the circuit breaker.
TP	Two-Part
TSF	Tool Suite Foundation. Common framework for SET and IET. Mainly 3 parts Core, Workbench (for standardized HMI), Utilities (applicative components like trace viewer, installer)
TUC	Timed UnderCurrent
TVE	Total Vector Error
Tx	Transmit

Term	Description
UA	User Account. A user account is a logical representation of a person with some configurable parameters. It includes information about the user identity and gives him a login to be recognized within the tool suite. A user account is principally interesting when it is associated to some roles that will grant him authorizations.
UDP	User Datagram Protocol
UL	Underwriters Laboratory
Unsecured IED	Relay/IEDs with no security mechanisms.
UPCT	User Programmable Curve Tool
UTC	Universal Time Coordinated
V	Voltage
VA	Phase A voltage: Sometimes L1, or red phase
VB	Phase B voltage: Sometimes L2, or yellow phase
VC	Phase C voltage: Sometimes L3, or blue phase
VCO	Voltage Controlled Overcurrent element
VDAN	Virtual Dual or Doubly Attached Node
VDEP OC>	A voltage dependent overcurrent element: could be a voltage controlled or voltage restrained overcurrent element and could be labeled 51V in ANSI terminology.
VDR	Voltage Dependent Resistor
VDS	Virtual Device Solution
V/Hz	An overfluxing element, flux is proportional to voltage/frequency: could be labeled 24 in ANSI terminology.
Vk	IEC knee point voltage of a current transformer.
VPN	Virtual Private Network (a secure private connection established on a public network or other unsecured environment).
VT	Voltage Transformer
VTS	Voltage Transformer Supervision: To detect VT input failure.
WAN	Wide Area Network
XACML	eXtensible Access Control Markup Language. An OASIS standard defining an XML access control policy implementation.
Xformer	Transformer
XKMS	XML Keys Management Specifications. A 3C standard, XML based, for distribution and registration of public keys and certificates
XML	Extensible Markup Language
XSD	XML Schema Definition

Table 1 - Acronyms and abbreviations

2 COMPANY PROPRIETARY TERMS

Symbol	Description
Courier	Schneider Electric's proprietary SCADA communications protocol
Metrosil	Brand of non-linear resistor produced by M&I Materials Ltd.
MiCOM	Schneider Electric's brand of protection relays

Table 2 - Company-proprietary terms

3 ANSI TERMS

ANSI no.	Description
3PAR	Three pole auto-reclose.
3PDT	Three pole dead time. The dead time used in three pole auto-reclose cycles.
52a	A circuit breaker closed auxiliary contact: The contact is in the same state as the breaker primary contacts
52b	A circuit breaker open auxiliary contact: The contact is in the opposite state to the breaker primary contacts
64R	Rotor earth fault protection
64S	100% stator earth (ground) fault protection using a low frequency injection method.
89a	An Isolator closed auxiliary contact: The contact is in the same state as the breaker primary contacts.
89b	An Isolator open auxiliary contact: The contact is in the opposite state to the breaker primary contacts.

Table 3 - ANSI abbreviations

ANSI no.	Function	Description
Current Protection Functions		
50/51	Phase overcurrent	Three-phase protection against overloads and phase-to-phase short-circuits.
50N/51N	Earth fault	Earth fault protection based on measured or calculated residual current values: • 50N/51N: residual current calculated or measured by 3 phase current sensors
50G/51G	Sensitive earth fault	Sensitive earth fault protection based on measured residual current values: • 50G/51G: residual current measured directly by a specific sensor such as a core balance CT
50BF	Breaker failure	If a breaker fails to be triggered by a tripping order, as detected by the non-extinction of the fault current, this backup protection sends a tripping order to the upstream or adjacent breakers.
46	Negative sequence / unbalance	Protection against phase unbalance, detected by the measurement of negative sequence current: • sensitive protection to detect 2-phase faults at the ends of long lines • protection of equipment against temperature build-up, caused by an unbalanced power supply, phase inversion or loss of phase, and against phase current unbalance
46BC	Broken conductor protection	Protection against phase imbalance, detected by measurement of I2/I1.
49RMS	Thermal overload	Protection against thermal damage caused by overloads on machines (transformers, motors or generators). The thermal capacity used is calculated according to a mathematical model which takes into account: • current RMS values • ambient temperature • negative sequence current, a cause of motor rotor temperature rise
Re-Closer		
79	Recloser	Automation device used to limit down time after tripping due to transient or semipermanent faults on overhead lines. The recloser orders automatic reclosing of the breaking device after the time delay required to restore the insulation has elapsed. Recloser operation is easy to adapt for different operating modes by parameter setting.
Directional Current Protection		
67N/67NC type 1 and 67	Directional phase overcurrent	Phase-to-phase short-circuit protection, with selective tripping according to fault current direction. It comprises a phase overcurrent function associated with direction detection, and picks up if the phase overcurrent function in the chosen direction (line or busbar) is activated for at least one of the three phases.

ANSI no.	Function	Description
67N/67NC	Directional earth fault	Earth fault protection, with selective tripping according to fault current direction. Three types of operation: • Type 1: the protection function uses the projection of the I0 vector • Type 2: the protection function uses the I0 vector magnitude with half-plane tripping zone • Type 3: the protection function uses the I0 vector magnitude with angular sector tripping zone
67N/67NC type 1	Directional current protection	Directional earth fault protection for impedant, isolated or compensated neutral systems, based on the projection of measured residual current.
67N/67NC type 2	Directional current protection	Directional overcurrent protection for impedance and solidly earthed systems, based on measured or calculated residual current. It comprises an earth fault function associated with direction detection, and picks up if the earth fault function in the chosen direction (line or busbar) is activated.
67N/67NC type 3	Directional current protection	Directional overcurrent protection for distribution networks in which the neutral earthing system varies according to the operating mode, based on measured residual current. It comprises an earth fault function associated with direction detection (angular sector tripping zone defined by 2 adjustable angles), and picks up if the earth fault function in the chosen direction (line or busbar) is activated.
Directional Power Protection Functions		

32P	Directional active overpower	Two-way protection based on calculated active power, for the following applications:
		• active overpower protection to detect overloads and allow load shedding
		• reverse active power protection:
		  • against generators running like motors when the generators consume active power
		  • against motors running like generators when the motors supply active power

32Q/40	Directional reactive overpower	Two-way protection based on calculated reactive power to detect field loss on synchronous machines: • reactive overpower protection for motors which consume more reactive power with field loss • reverse reactive overpower protection for generators which consume reactive power with field loss.
Machine Protection Functions		
37	Phase undercurrent	Protection of pumps against the consequences of a loss of priming by the detection of motor no-load operation. It is sensitive to a minimum of current in phase 1, remains stable during breaker tripping and may be inhibited by a logic input.

48/51LR/14	Locked rotor / excessive starting time	Protection of motors against overheating caused by:
		• excessive motor starting time due to overloads (e.g. conveyor) or insufficient supply voltage.
		The reacceleration of a motor that is not shut down, indicated by a logic input, may be considered as starting.
		• locked rotor due to motor load (e.g. crusher):
		  • in normal operation, after a normal start
		  • directly upon starting, before the detection of excessive starting time, with detection of locked rotor by a zero speed detector connected to a logic input, or by the underspeed function.

66	Starts per hour	Protection against motor overheating caused by:
		• too frequent starts: motor energizing is inhibited when the maximum allowable number of starts is reached, after counting of:
		  • starts per hour (or adjustable period)
		  • consecutive motor hot or cold starts (reacceleration of a motor that is not shut down, indicated by a logic input, may be counted as a start)
		• starts too close together in time: motor re-energizing after a shutdown is only allowed after an adjustable waiting time.

ANSI no.	Function	Description
50V/51V	Voltage-restrained overcurrent	Phase-to-phase short-circuit protection, for generators. The current tripping set point is voltage-adjusted in order to be sensitive to faults close to the generator which cause voltage drops and lowers the short-circuit current.
26/63	Thermostat/Buchholz	Protection of transformers against temperature rise and internal faults via logic inputs linked to devices integrated in the transformer.
38/49T	Temperature monitoring	Protection that detects abnormal temperature build-up by measuring the temperature inside equipment fitted with sensors: • transformer: protection of primary and secondary windings • motor and generator: protection of stator windings and bearings.
Voltage Protection Functions		
27D	Positive sequence undervoltage	Protection of motors against faulty operation due to insufficient or unbalanced network voltage, and detection of reverse rotation direction.
27R	Remanent undervoltage	Protection used to check that remanent voltage sustained by rotating machines has been cleared before allowing the busbar supplying the machines to be re-energized, to avoid electrical and mechanical transients.
27	Undervoltage	Protection of motors against voltage sags or detection of abnormally low network voltage to trigger automatic load shedding or source transfer. Works with phase-to-phase voltage.
59	Overvoltage	Detection of abnormally high network voltage or checking for sufficient voltage to enable source transfer. Works with phase-to-phase or phase-to-neutral voltage, each voltage being monitored separately.
59N	Neutral voltage displacement	Detection of insulation faults by measuring residual voltage in isolated neutral systems.
47	Negative sequence overvoltage	Protection against phase unbalance resulting from phase inversion, unbalanced supply or distant fault, detected by the measurement of negative sequence voltage.
Frequency Protection Functions		
81O	Overfrequency	Detection of abnormally high frequency compared to the rated frequency, to monitor power supply quality. Other organizations may use 81H instead of 81O.
81U	Underfrequency	Detection of abnormally low frequency compared to the rated frequency, to monitor power supply quality. The protection may be used for overall tripping or load shedding. Protection stability is ensured in the event of the loss of the main source and presence of remanent voltage by a restraint in the event of a continuous decrease of the frequency, which is activated by parameter setting. Other organizations may use 81L instead of 81U.
81R	Rate of change of frequency	Protection function used for fast disconnection of a generator or load shedding control. Based on the calculation of the frequency variation, it is insensitive to transient voltage disturbances and therefore more stable than a phase-shift protection function. **Disconnection** In installations with autonomous production means connected to a utility, the “rate of change of frequency” protection function is used to detect loss of the main system in view of opening the incoming circuit breaker to: • protect the generators from a reconnection without checking synchronization • avoid supplying loads outside the installation. **Load shedding** The “rate of change of frequency” protection function is used for load shedding in combination with the underfrequency protection to: • either accelerate shedding in the event of a large overload • or inhibit shedding following a sudden drop in frequency due to a problem that should not be solved by shedding.
Dynamic Line Rating (DLR) Protection Functions		

ANSI no.	Function	Description
49DLR	Dynamic line rating (DLR)	Protection of overhead lines based on calculation of rating or ampacity to dynamically take into account the effect of prevailing weather conditions as monitored by external sensors for: • Ambient Temperature • Wind Velocity • Wind Direction • Solar Radiation

Table 4 - ANSI descriptions

4 CONCATENATED TERMS

Term
Undercurrent
Overcurrent
Overfrequency
Underfrequency
Undervoltage
Overvoltage

Table 5 - Concatenated terms

5 UNITS FOR DIGITAL COMMUNICATIONS

Unit	Description
b	bit
B	Byte
kb	Kilobit(s)
kbps	Kilobits per second
kB	Kilobyte(s)
Mb	Megabit(s)
Mbps	Megabits per second
MB	Megabyte(s)
Gb	Gigabit(s)
Gbps	Gigabits per second
GB	Gigabyte(s)
Tb	Terabit(s)
Tbps	Terabits per second
TB	Terabyte(s)

Table 6 - Units for digital communications

6 AMERICAN VS BRITISH ENGLISH TERMINOLOGY

British English	American English
…ae…	…e…
…ence	…ense
…ise	…ize
…oe…	…e…
…ogue	…og
…our	…or
…ourite	…orite
…que	…ck
…re	…er
…yse	…yze
Aluminium	Aluminum
Centre	Center
Earth	Ground
Fibre	Fiber
Ground	Earth
Speciality	Specialty

Table 7 - American vs British English terminology

7 LOGIC SYMBOLS AND TERMS

Symbol	Description	Units
&	Logical “AND”: Used in logic diagrams to show an AND-gate function.	
Σ	“Sigma”: Used to indicate a summation, such as cumulative current interrupted.	
τ	“Tau”: Used to indicate a time constant, often associated with thermal characteristics.	
ω	System angular frequency	rad
<	Less than: Used to indicate an “under” threshold, such as undercurrent (current dropout).	
>	Greater than: Used to indicate an “over” threshold, such as overcurrent (current overload)	
o	A small circle on the input or output of a logic gate: Indicates a NOT (invert) function.	
1	Logical “OR”: Used in logic diagrams to show an OR-gate function.	
ABC	Clockwise phase rotation.	
ACB	Anti-Clockwise phase rotation.	
C	Capacitance	A
df/dt	Rate of Change of Frequency protection	Hz/s
df/dt>1	First stage of df/dt protection	Hz/s
F<	Underfrequency protection: Could be labeled 81-U in ANSI terminology.	Hz
F>	Overfrequency protection: Could be labeled 81-O in ANSI terminology.	Hz
F<1	First stage of under frequency protection: Could be labeled 81-U in ANSI terminology.	Hz
F>1	First stage of over frequency protection: Could be labeled 81-O in ANSI terminology.	Hz
f_{max}	Maximum required operating frequency	Hz
f_{min}	Minimum required operating frequency	Hz
f_n	Nominal operating frequency	Hz
I	Current	A
I^	Current raised to a power: Such as when breaker statistics monitor the square of ruptured current squared (^ power = 2).	An
I’f	Maximum internal secondary fault current (may also be expressed as a multiple of In)	A
I<	An undercurrent element: Responds to current dropout.	A
I>>	Current setting of short circuit element	In
I>	A phase overcurrent protection: Could be labeled 50/51 in ANSI terminology.	A
I>1	First stage of phase overcurrent protection: Could be labeled 51-1 in ANSI terminology.	A
I>2	Second stage of phase overcurrent protection: Could be labeled 51-2 in ANSI terminology.	A
I>3	Third stage of phase overcurrent protection: Could be labeled 51-3 in ANSI terminology.	A
I>4	Fourth stage of phase overcurrent protection: Could be labeled 51-4 in ANSI terminology.	A
I>BB	Minimum pick-up phase threshold for the local trip order confirmation.	A
I>DZ	Minimum pick-up phase threshold for the Dead Zone protection.	A
I_0	Earth fault current setting Zero sequence current: Equals one third of the measured neutral/residual current.	A
I_1	Positive sequence current.	A
I_2	Negative sequence current.	A
I2>	Negative sequence overcurrent protection (NPS element).	A
I2pol	Negative sequence polarizing current.	A
I2therm>	A negative sequence thermal element: Could be labeled 46T in ANSI terminology.	
IA	Phase A current: Might be phase L1, red phase.. or other, in customer terminology.	A
IB	Phase B current: Might be phase L2, yellow phase.. or other, in customer terminology.	A
IbiasPh> Cur.	SDEF blocking bias current threshold.	

Symbol	Description	Units
IC	Phase C current: Might be phase L3, blue phase.. or other, in customer terminology.	A
ID>1	Minimum pick-up phase circuitry fault threshold.	
ID>2	Minimum pick-up differential phase element for all the zones.	
IDCZ>2	Minimum pick-up differential phase element for the Check Zone.	
Idiff	Current setting of biased differential element	A
IDN>1	Minimum pick-up neutral circuitry fault threshold.	
IDN>2	Minimum pick-up differential neutral element for all the zones.	
IDNCZ>2	Minimum pick-up differential neutral element for the Check Zone.	
IDZ	Minimum pick-up differential neutral element for the Check Zone.	
If	Maximum secondary through-fault current	A
If max	Maximum secondary fault current (same for all feeders)	A
If max int	Maximum secondary contribution from a feeder to an internal fault	A
If Z1	Maximum secondary phase fault current at Zone 1 reach point	A
Ife	Maximum secondary through fault earth current	A
IfeZ1	Maximum secondary earth fault current at Zone 1 reach point	A
Ifn	Maximum prospective secondary earth fault current or 31 x I> setting (whichever is lowest)	A
Ifp	Maximum prospective secondary phase fault current or 31 x I> setting (whichever is lowest)	A
I_m	Mutual current	A
IM64	InterMiCOM64.	
IMx	InterMiCOM64 bit (x=1 to 16)	
I_n	Current transformer nominal secondary current. The rated nominal current of the relay: Software selectable as 1 amp or 5 amp to match the line CT input.	A
IN	Neutral current, or residual current: This results from an internal summation of the three measured phase currents.	A
IN>	A neutral (residual) overcurrent element: Detects earth/ground faults.	A
IN>1	First stage of ground overcurrent protection: Could be labeled 51N-1 in ANSI terminology.	A
IN>2	Second stage of ground overcurrent protection: Could be labeled 51N-2 in ANSI terminology.	A
IN>BB	Minimum pick-up neutral threshold for the local trip order confirmation.	
IN>DZ	Minimum pick-up neutral threshold for the Dead Zone protection.	
Inst	An element with “instantaneous” operation: i.e. having no deliberate time delay.	
I/O	Inputs and Outputs - used in connection with the number of optocoupled inputs and output contacts within the relay.	
I/P	Input	
Iref	Reference current of P63x calculated from the reference power and nominal voltage	A
IREF>	A Restricted Earth Fault overcurrent element: Detects earth (ground) faults. Could be labeled 64 in ANSI terminology.	A
IRm2	Second knee-point bias current threshold setting of P63x biased differential element	A
Is	Value of stabilizing current	A
IS1	Differential current pick-up setting of biased differential element	A
IS2	Bias current threshold setting of biased differential element	A
I_{SEF}>	Sensitive Earth Fault overcurrent element.	A
Isn	Rated secondary current (I secondary nominal)	A
Isp	Stage 2 and 3 setting	A
Ist	Motor start up current referred to CT secondary side	A
K	Dimensioning factor	

Symbol	Description	Units
K_1	Lower bias slope setting of biased differential element	%
K_2	Higher bias slope setting of biased differential element	%
KCZ	Slope of the differential phase element for the Check Zone.	
K_e	Dimensioning factor for earth fault	
km	Distance in kilometers	
K_{max}	Maximum dimensioning factor	
KNCZ	Slope of the differential neutral element for the Check Zone.	
K_{rpa}	Dimensioning factor for reach point accuracy	
K_s	Dimensioning factor dependent upon through fault current	
K_{ssc}	Short circuit current coefficient or ALF	
K_t	Dimensioning factor dependent upon operating time	
kZm	The mutual compensation factor (mutual compensation of distance elements and fault locator for parallel line coupling effects).	
kZN	The residual compensation factor: Ensuring correct reach for ground distance elements.	
L	Inductance	A
m1	Lower bias slope setting of P63x biased differential element	None
m2	Higher bias slope setting of P63x biased differential element	None
mi	Distance in miles.	
N	Indication of “Neutral” involvement in a fault: i.e. a ground (earth) fault.	
-P>	A reverse power (W) element: could be labeled 32R in ANSI terminology.	
P>	An overpower (W) element: could be labeled 32O in ANSI terminology.	
P<	A low forward power (W) element: could be labeled 32L in ANSI terminology.	
P1	Used in IEC terminology to identify the primary CT terminal polarity: Replace by a dot when using ANSI standards.	
P2	Used in IEC terminology to identify the primary CT terminal polarity: The non-dot terminal.	
P_n	Rotating plant rated single phase power	W
PN>	Wattmetric earth fault protection: Calculated using residual voltage and current quantities.	
Q<	A reactive under power (VAr) element	
R	Resistance (Ω)	Ω
R< or 64S R<	A 100% stator earth (ground) fault via low frequency injection under resistance element: could be labeled 64S in ANSI terminology.	
R Gnd.	A distance zone resistive reach setting: Used for ground (earth) faults.	
R Ph	A distance zone resistive reach setting used for Phase-Phase faults.	
Rct	Secondary winding resistance	Ω
RCT	Current transformer secondary resistance	Ω
Rl	Resistance of single lead from relay to current transformer	Ω
Rr	Resistance of any other protective relays sharing the current transformer	Ω
Rrn	Resistance of relay neutral current input	Ω
Rrp	Resistance of relay phase current input	Ω
Rs	Value of stabilizing resistor	Ω
Rx	Receive: typically used to indicate a communication receive line/pin.	
S<	An apparent under power (VA) element	
S1	Used in IEC terminology to identify the secondary CT terminal polarity: Replace by a dot when using ANSI standards.	

Symbol	Description	Units
S2	Used in IEC terminology to identify the secondary CT terminal polarity: The non-dot terminal. Also used to signify negative sequence apparent power, S2 = V2 x I2.	
S2>	A negative sequence apparent power element, S2 = V2 x I2.	
t	A time delay.	
t'	Duration of first current flow during auto-reclose cycle	s
T1	Primary system time constant	s
TF	Through Fault monitoring	
tfr	Auto-reclose dead time	s
Thermal I>	A stator thermal overload element: could be labeled 49 in ANSI terminology.	
Thru/TF	Through Fault monitoring	
tIdiff	Current differential operating time	s
Ts	Secondary system time constant	s
Tx	Transmit: typically used to indicate a communication transmit line/pin.	
V	Voltage.	V
V<	An undervoltage element: could be labeled 27 in ANSI terminology	V
V<1	First stage of undervoltage protection: Could be labeled 27-1 in ANSI terminology.	V
V<2	Second stage of undervoltage protection: Could be labeled 27-2 in ANSI terminology.	V
V>	An overvoltage element: could be labeled 59 in ANSI terminology	V
V>1	First stage of overvoltage protection: Could be labeled 59-1 in ANSI terminology.	V
V>2	Second stage of overvoltage protection: Could be labeled 59-2 in ANSI terminology.	V
V0	Zero sequence voltage: Equals one third of the measured neutral/residual voltage.	V
V1	Positive sequence voltage.	V
V2	Negative sequence voltage.	V
V2>	A Negative Phase Sequence (NPS) overvoltage element: could be labeled 47 in ANSI terminology.	
$V2_{pol}$	Negative sequence polarizing voltage.	V
V_A	Phase A voltage: Might be phase L1, red phase.. or other, in customer terminology.	V
V_B	Phase B voltage: Might be phase L2, yellow phase.. or other, in customer terminology.	V
V_C	Phase C voltage: Might be phase L3, blue phase.. or other, in customer terminology.	V
Vf	Theoretical maximum voltage produced if CT saturation did not occur	V
Vin	Input voltage e.g. to an opto-input	V
V_k	Required CT knee-point voltage. IEC knee point voltage of a current transformer.	V
VN	Neutral voltage displacement, or residual voltage.	V
VN>	A residual (neutral) overvoltage element: could be labeled 59N in ANSI terminology.	V
V_n	Nominal voltage	V
Vn	The rated nominal voltage of the relay: To match the line VT input.	V
VN>1	First stage of residual (neutral) overvoltage protection.	V
VN>2	Second stage of residual (neutral) overvoltage protection.	V
VN3H>	A 100% stator earth (ground) fault 3rd harmonic residual (neutral) overvoltage element: could be labeled 59TN in ANSI terminology.	
VN3H<	A 100% stator earth (ground) fault 3rd harmonic residual (neutral) undervoltage element: could be labeled 27TN in ANSI terminology.	
Vres.	Neutral voltage displacement, or residual voltage.	V
Vs	Value of stabilizing voltage	V
V_x	An auxiliary supply voltage: Typically the substation battery voltage used to power the relay.	V

Symbol	Description	Units
WI	Weak Infeed logic used in teleprotection schemes.	
X	Reactance	None
X/R	Primary system reactance/resistance ratio	None
Xe/Re	Primary system reactance/resistance ratio for earth loop	None
Xt	Transformer reactance (per unit)	p.u.
Y	Admittance	p.u.
YN>	Neutral overadmittance protection element: Non-directional neutral admittance protection calculated from neutral current and residual voltage.	
Z	Impedance	p.u.
Z<	An under impedance element: could be labeled 21 in ANSI terminology.	
Z0	Zero sequence impedance.	
Z1	Positive sequence impedance.	
Z1	Zone 1 distance protection.	
Z1X	Reach-stepped Zone 1X, for zone extension schemes used with auto-reclosure.	
Z2	Negative sequence impedance.	
Z2	Zone 2 distance protection.	
ZP	Programmable distance zone that can be set forward or reverse looking.	
Zs	Used to signify the source impedance behind the relay location.	
Φal	Accuracy limit flux	Wb
Ψr	Remanent flux	Wb
Ψs	Saturation flux	Wb

Table 8 - Logic Symbols and Terms

8 LOGIC TIMERS

Logic symbols	Explanation	Time chart
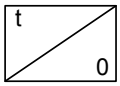	Delay on pick-up timer, t	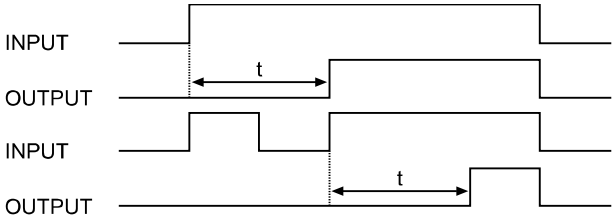
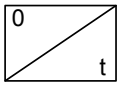	Delay on drop-off timer, t	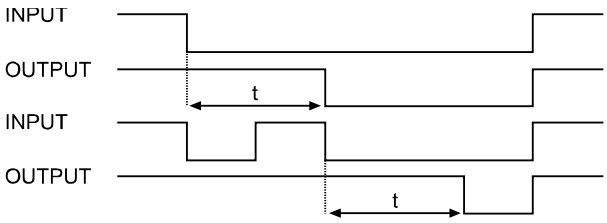
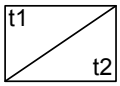	Delay on pick-up/drop-off timer	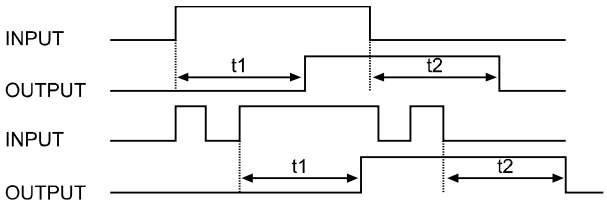
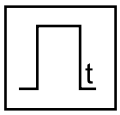	Pulse timer	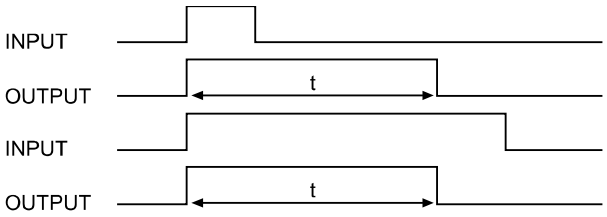
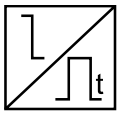	Pulse pick-up falling edge	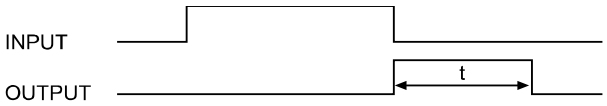
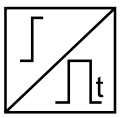	Pulse pick-up raising edge	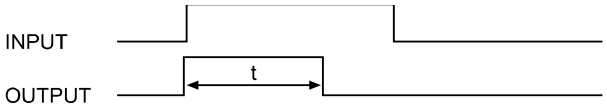

Logic symbols	Explanation	Time chart
Latching	Latch	INPUT OUTPUT
Dwell Timer	Dwell timer	INPUT OUTPUT t INPUT OUTPUT t
Straight	Straight (non latching): Hold value until input reset signal	INPUT OUTPUT

Table 9 - Logic Timers

9 LOGIC GATES

AND GATE

Symbol

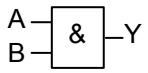

Truth Table

IN		OUT
A	B	Y
0	0	0
0	1	0
1	0	0
1	1	1

Symbol

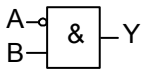

Truth Table

IN		OUT
A	B	Y
0	0	0
0	1	1
1	0	0
1	1	0

Symbol

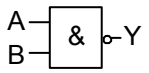

Truth Table

IN		OUT
A	B	Y
0	0	1
0	1	1
1	0	1
1	1	0

P4424ENb

Figure 1 - Logic Gates - AND Gate

OR GATE

Symbol

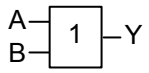

Truth Table

IN		OUT
A	B	Y
0	0	0
0	1	1
1	0	1
1	1	1

Symbol

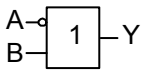

Truth Table

IN		OUT
A	B	Y
0	0	1
0	1	1
1	0	0
1	1	1

Symbol

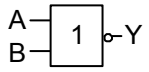

Truth Table

IN		OUT
A	B	Y
0	0	1
0	1	0
1	0	0
1	1	0

P4424ENc

Figure 2 - Logic Gates - OR Gate

R – S FLIP-FLOP

Symbol

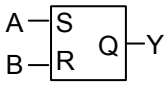

Truth Table

A	B	QN	QN+	Active Mode
0	0			Hold Mode
0	1	0		Hold Mode
		1	0	Reset
1	0	0	1	Set
		1		Hold Mode
0	0	-	-	Inhibit Mode

Symbol

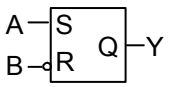

Truth Table

A	B	QN	QN+	Active Mode
0	0	0		Hold Mode
		1	0	Reset
0	1			Hold Mode
1	0	-	-	Inhibit Mode
0	1	0	1	Set
		1		Hold Mode

Symbol

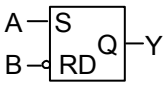

* RD = Reset Dominant

Truth Table

A	B	QN	QN+	Active Mode
0	0			Hold Mode
0	1			0
1	0	0	1	Set
		1		Hold Mode
1	1			0

P4424ENd

Figure 3 - Logic Gates - R-S Flip-Flop Gate

EXCLUSIVE OR GATE

Symbol

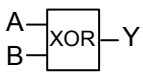

Truth Table

IN		OUT
A	B	Y
0	0	0
0	1	1
1	0	1
1	1	0

Symbol

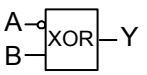

Truth Table

IN		OUT
A	B	Y
0	0	1
0	1	1
1	0	0
1	1	1

Symbol

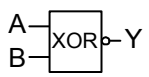

Truth Table

IN		OUT
A	B	Y
0	0	1
0	1	0
1	0	0
1	1	1

P4424ENe

Figure 4 - Logic Gates - Exclusive OR Gate

PROGRAMMABLE GATE

Symbol

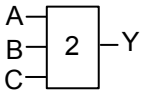

Truth Table

IN			OUT
A	B	C	Y
0	0	0	0
0	0	1	0
0	1	0	0
0	1	1	1
1	0	0	0
1	0	1	1
1	1	0	1
1	1	1	1

Symbol

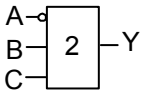

Truth Table

IN			OUT
A	B	C	Y
0	0	0	0
0	0	1	1
0	1	0	1
0	1	1	1
1	0	0	0
1	0	1	0
1	1	0	0
1	1	1	1

Symbol

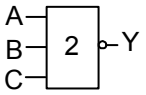

Truth Table

IN			OUT
A	B	C	Y
0	0	0	1
0	0	1	1
0	1	0	1
0	1	1	0
1	0	0	1
1	0	1	0
1	1	0	0
1	1	1	0

P4424ENf

Figure 5 - Logic Gates - Programmable Gate

NOT GATE

Symbol

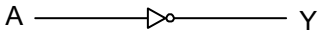

Inverter (NOT)

Truth Table

IN	OUT
A	Y
0	1
1	0

P4424ENg

Figure 6 - Logic Gates - NOT Gate

Notes:

Customer Care Centre

http://www.schneider-electric.com/ccc

Schneider Electric

35 rue Joseph Monier
92506 Rueil-Malmaison
FRANCE

Phone: +33 (0) 1 41 29 70 00
Fax: +33 (0) 1 41 29 71 00

www.schneider-electric.com

Publisher: Schneider Electric

Publication: P849/EN M/D33 Software Version: B0 Hardware Suffix: M

08/2015