www.apc.com

Start-Up Guide

InfraStruXure® System

SX Enclosure
Two Post Rack
Four Post Rack

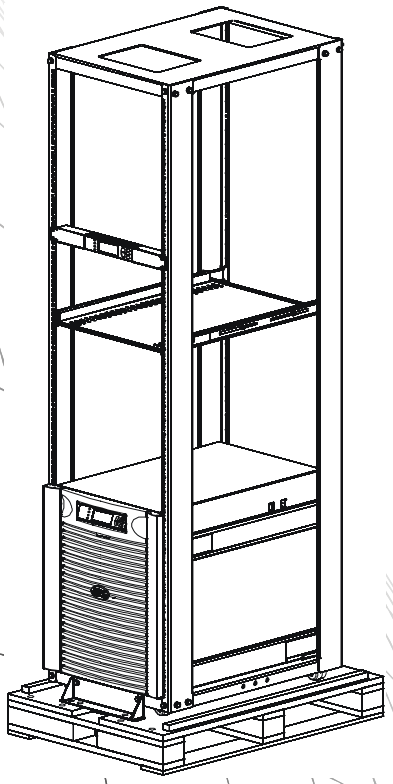

This manual and the safety guide are available in English on the enclosed CD and the APC Web site, www.apc.com.

Start-UP Guide English

InfraStruXure® System

990-2914 06/2006

Introduction

This is the Start-UP Guide for an APC InfraStruXure® System. For detailed information and instructions concerning individual components in the system, refer to component documentation available on the Utility CD.

This InfraStruXure System is intended for use in wiring closets and small data centers. The InfraStruXure System provides support for IT organizational needs using integrated power, rack, and management solutions.

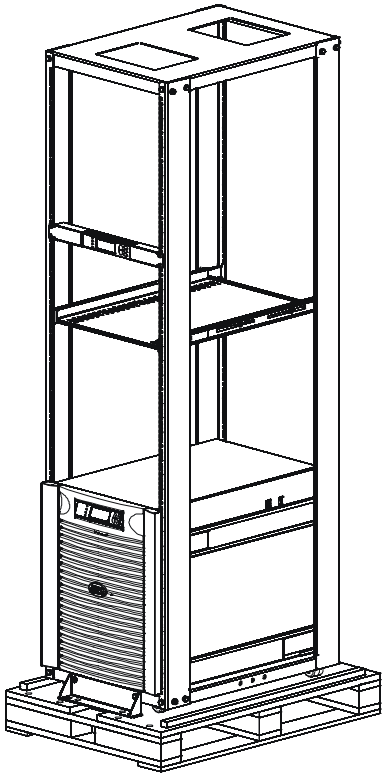

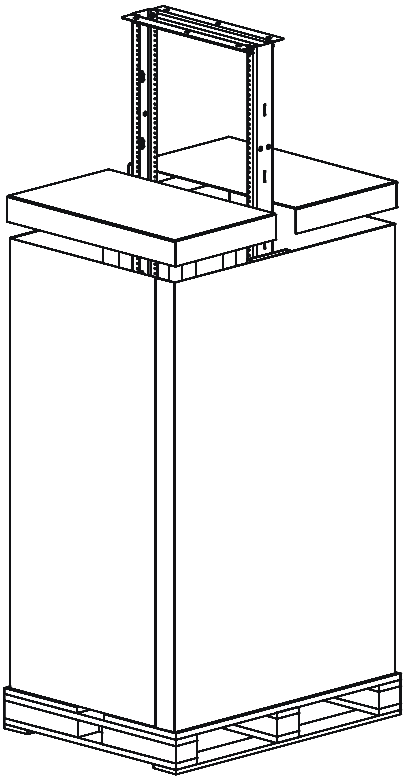

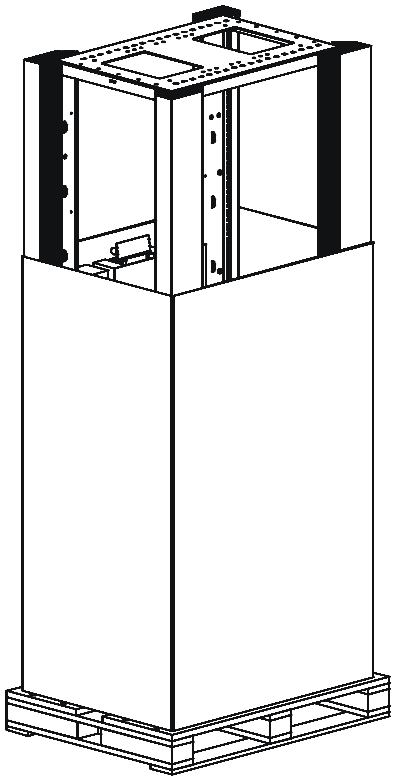

Physical Installation

Your system may vary from the examples depicted in this manual.

Position the NetShelter® SX Enclosure, Two Post or Four Post Rack

The SX enclosure is equipped with leveling feet that provide a stable base if the floor is uneven. Lower the leveling feet using a 13-mm open-ended wrench. Turn the feet clockwise. Extend the leveling feet until they make firm contact with the floor.

NOTE: The leveling feet will not compensate for a badly sloped surface.

Stabilize the NetShelter SX Enclosure, Two Post or Four Post Rack

SX Enclosure: The pallet mounting brackets can be used to bolt the SX enclosure to the floor for added stability.

Two or Four Post Rack: The pallet mounting brackets must be used to bolt the two post or four post rack to the floor. See diagram.

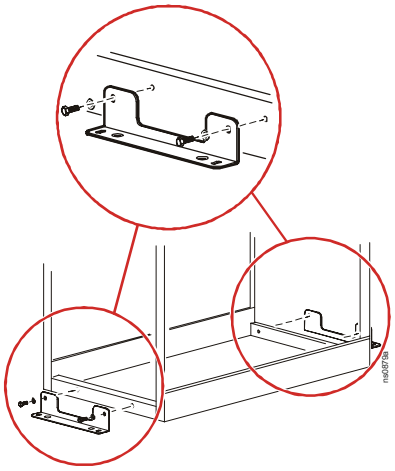

Join Multiple NetShelter SX Enclosures

Multiple NetShelter SX enclosures can be joined together utilizing the installed baying brackets.
To join a NetShelter SX enclosure to a NetShelter VX or a NetShelter VS enclosure refer to www.apc.com for accessory kit part numbers.

1. Remove the front and rear doors from the enclosures where appropriate. Ground wires and the display cable should be disconnected for this procedure.
2. Locate the four baying brackets on each enclosure. Two brackets are located on the front and two on the back. Rotate each bracket 90° toward the adjoining enclosure so that the bracket is parallel to the floor.
3. Align the enclosures and secure the brackets using one M5 x 12 flat-head screw per bracket.

NOTE: 600 mm enclosures can be joined without a gap by utilizing the inner-most set of holes on the baying brackets. 600 mm enclosures can be joined 600 mm (24 in) on center using the outer-most holes on the baying brackets. APC offers optional baying trim to cover the resulting gaps.

4. Reinstall the front and rear doors. Reconnect the ground wires and the display cable.

Install Optional Accessories

Install accessories prior to connecting power to the system.

Optional Accessories

- Cable Organizers
- Cable Management
- Troughs and Ladders
- Sensors

Electrical Installation

Input Connection for Power Cord Installation

Plug the UPS into a two-pole, three-wire, grounded receptacle only. Avoid using extension cords.

NOTE: The uninterruptible power supply (UPS) may have a transient voltage surge-suppression (TVSS) screw located on the rear panel, for connecting the ground lead on surge suppression devices such as telephone and network line protectors.

Prior to connecting the grounding cable, ensure that the UPS is NOT connected to utility or battery power.

NOTE: Some models are equipped with a site wiring fault LED located on the rear panel. The LED will illuminate if the UPS is plugged into an improperly wired utility power outlet. Refer to *Troubleshooting* in component documentation.

Input Connection for Hardwire Installation

- Wiring must be performed by a qualified electrician.
- Adhere to all national and local electrical codes.
- Strain relief is required for all hardwiring.
- All openings in the hardwire assembly must be covered. Failure to do so may result in personal injury or equipment damage.

Input Wiring Tables

200/208/240 Models

System	Number of Phases	External Input Circuit Breaker (Typical)	Wire Size (Typical)
SURT5000	L1, L2, G	30/32 A / 2-pole	5 mm^2 #10 AWG
SURT7500	L1, L2, G	50 A / 2-pole	10 mm^2 #8 AWG
SURT10000	L1, L2, G	63 A / 2-pole	16 mm^2 #6 AWG
Symmetra LX *8000 VA*	L1, L2, N, G	50 A / 2-pole	14 mm^2 #6 AWG
Symmetra LX *16000 VA*	L1, L2, N, G	100 A / 2-pole	25 mm^2 #3 AWG

220/230/240 models

System	Number of Phases	External Input Circuit Breaker (Typical)	Wire Size (Typical)
SURT5000	L1, N, G	30/32 A / 1-pole	5 mm^2 #10 AWG
SURT7500 *single phase input*	L1, N, G	50 A / 1-pole	10 mm^2 #8 AWG
SURT7500 *three phase input*	L1, L2, L3, N, G	50 A / 3-pole	10 mm^2 #8 AWG
SURT10000 *single phase input*	L1, N, G	63 A / 1-pole	16 mm^2 #6 AWG
SURT10000 *three phase input*	L1, L2, L3, N, G	63 A / 3-pole	16 mm^2 #6 AWG
Symmetra LX *8000 VA single phase input*	L1, N, G	50 A / 1-pole	14 mm^2 #6 AWG
Symmetra LX *16000 VA single phase input*	L1, N, G	100 A / 1-pole	25 mm^2 #3 AWG
Symmetra LX *16000 VA three phase input*	L1, L2, L3, N, G	100 A / 3-pole	25 mm^2 #3 AWG

Hardwire Smart-UPS® RT

Smart-UPS RT 5000 VA

Refer to the Input Wiring tables for wire size and circuit breaker type.

1. Switch the utility circuit breaker off.
2. Remove the input access panel A.
3. Remove the circular knockout.

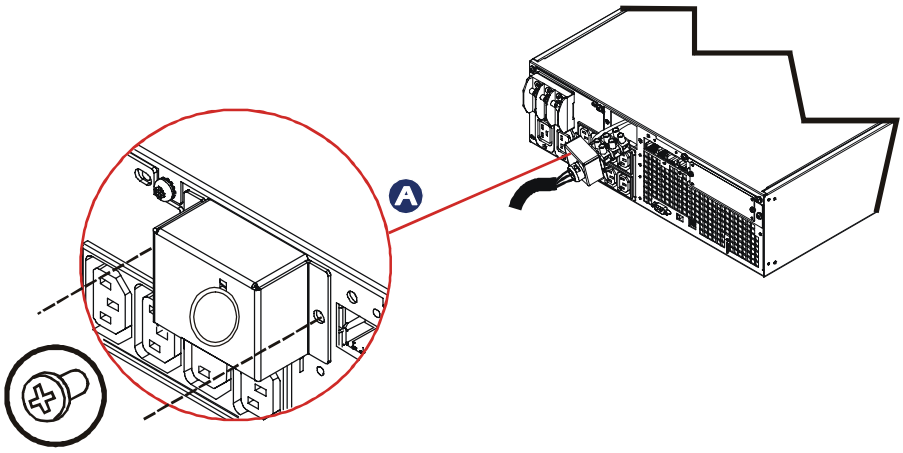

4. Run wire through the access panel B to the terminal block. When connecting wires to the terminal block be sure to connect the ground wire first. Use an appropriate strain relief (not supplied).

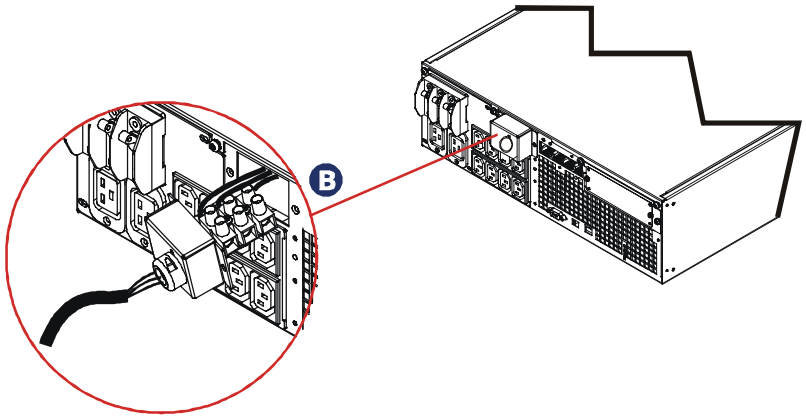

5. Switch the utility circuit breaker on.
6. Check line voltages.
7. Replace the access panel.

Smart-UPS RT 7500/10000 VA

Refer to the Input Wiring tables for wire size and circuit breaker type.

1. Switch the utility circuit breaker and UPS input circuit breaker off (A).
2. Remove the input access panel (B).
3. Remove circular knockouts.
4. Run wires through access panel to terminal block. Use an appropriate strain relief (not supplied). When connecting wires to the terminal block be sure to connect the ground wire first.
5. *XLI models only:* For three-phase input, set Input Phase Selector switch (C) to '3'. For single-phase input, leave switch in default position of '1'.
6. Switch the utility and UPS input circuit breakers on.
7. Check line voltages.
8. Replace the access panel.

200/208 Models

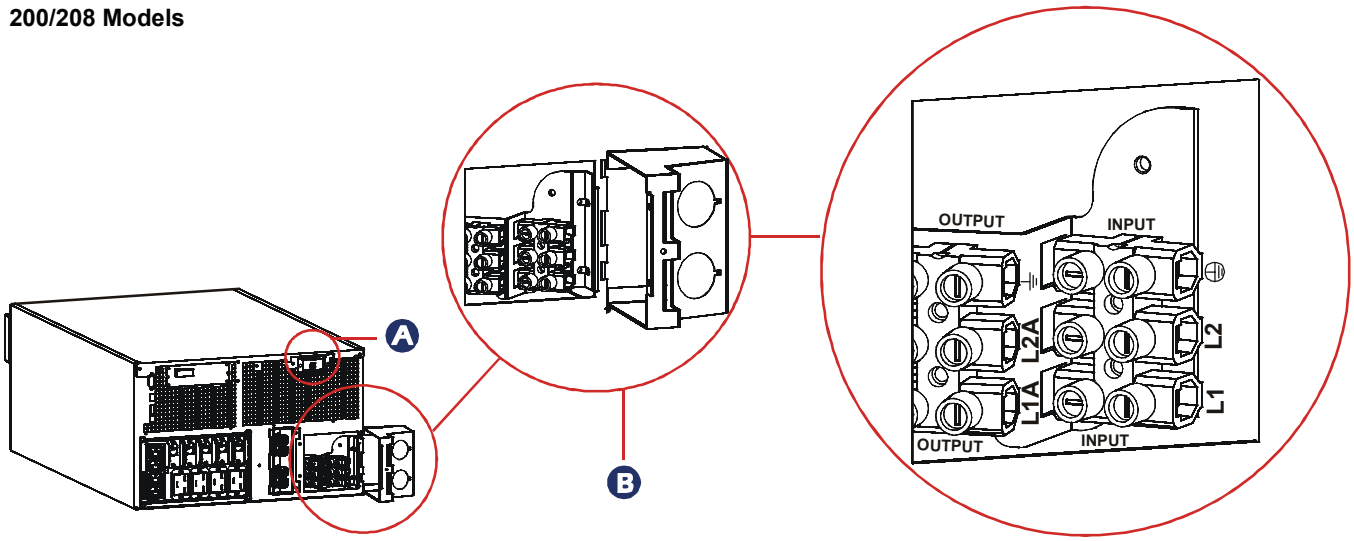

220/230/240 Models

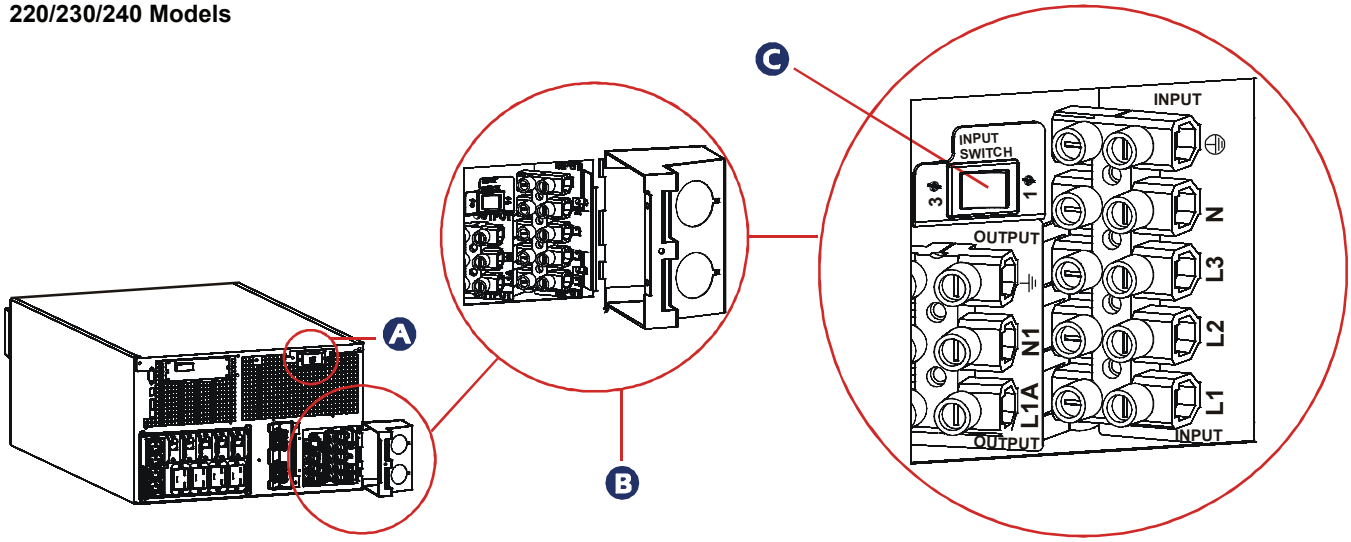

Hardwire the Symmetra® LX

Refer to the Input Wiring tables for wire size and circuit breaker type.

1. Remove screws A and slide the hardwire assembly B out of the chassis.
2. Remove the access panel C.
3. Remove circular knockouts. Attach an input conduit D. Use appropriate strain relief (not supplied).
4. Run wires through the conduit to the terminal block. When connecting wires to the terminal block be sure to connect the ground wire first.
   a. Connect to the terminal block as indicated on the label E, using a torque of 40 in-lb (4.5 N-m).
   b. Cover the unused holes in the strain relief panel.
5. Reattach the access panel.
6. Reinstall the hardwire assembly.
7. Turn on the utility circuit breaker, the UPS input circuit breaker F, and the system enable switch G. Confirm that the V in value on the UPS display matches the branch voltage.

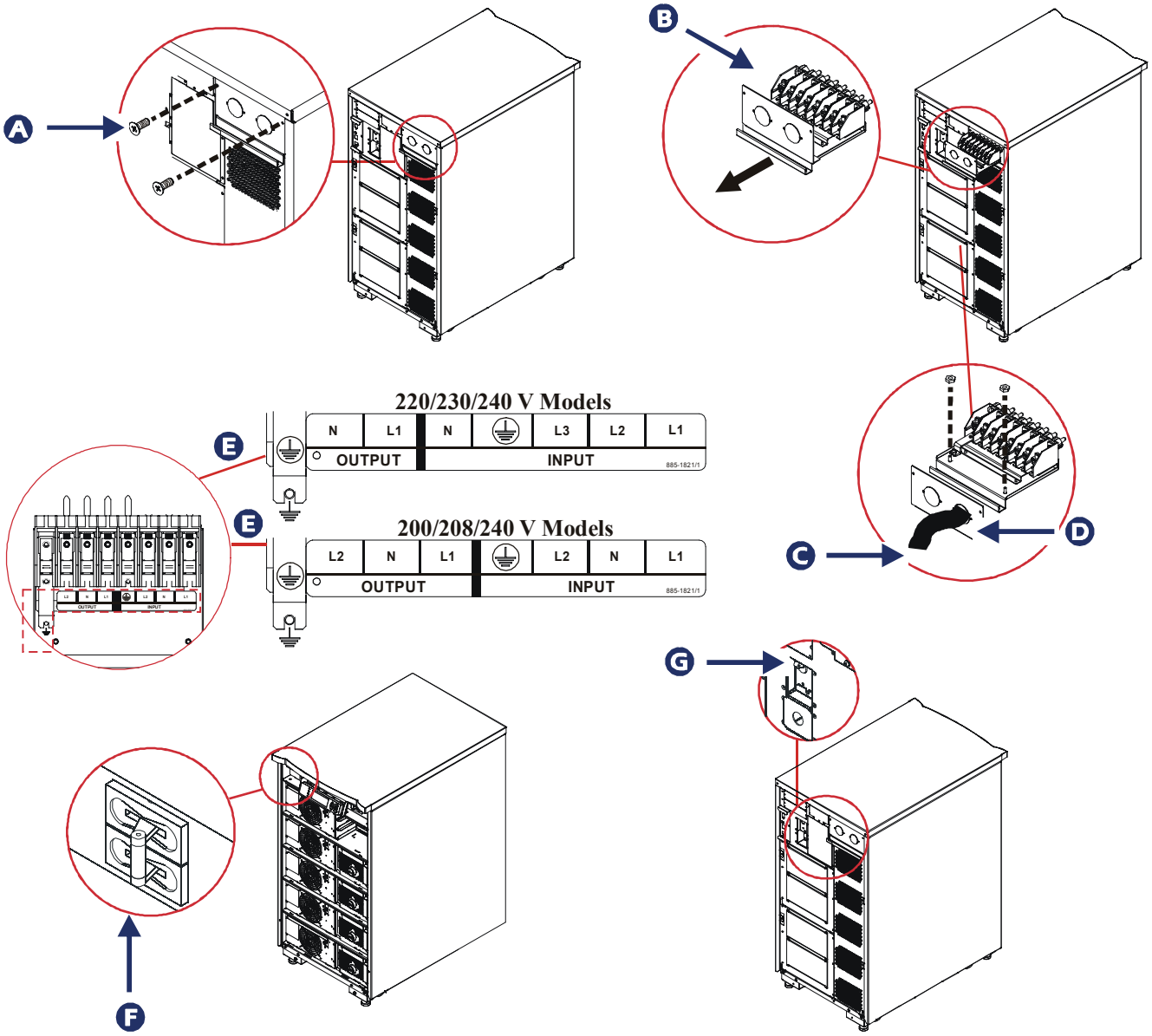

Connect the Emergency Power Off (EPO)

The EPO feature may be required. Adhere to all local and national electrical codes. EPO provides immediate de-energizing of connected equipment from a remote location, without switching to battery operation.

1. Use the EPO connector on the terminal block supplied with the UPS.
2. Use a normally-open contact to connect to the EPO.

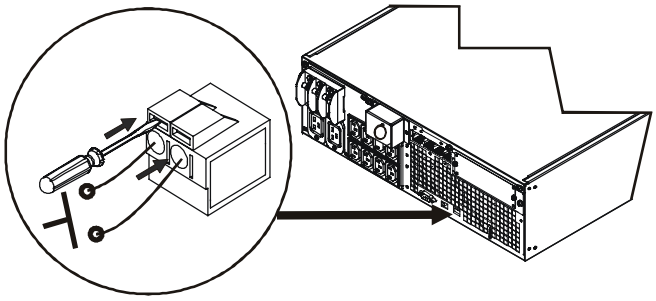

Units may vary in appearance from those depicted in this manual.

The EPO interface is a Safety Extra Low Voltage (SELV) circuit. Connect it only to other SELV circuits. The EPO interface monitors circuits that have no determined voltage potential. Such closure circuits may be provided by a switch or relay properly isolated from the utility. To avoid damage to the UPS, do not connect the EPO interface to any circuit other than a closure type circuit.

Use one of the following cable types to connect the UPS to the EPO switch.

- CL2: Class 2 cable for general use.
- CL2P: Plenum cable for use in ducts, plenums, and other spaces used for environmental air.
- CL2R: Riser cable for use in a vertical run in a floor-to-floor shaft.
- CLEX: Limited use cable for use in dwellings and for use in raceways.
- For installation in Canada: Use only CSA certified, type ELC, (extra-low voltage control cable).
- For installation in other countries: Use standard low-voltage cable in accordance with national and local regulations.

Connect the UPS Batteries

Smart-UPS and Smart-UPS RT Models

Connect the Internal Batteries

1. Remove the bezel on the front of the UPS.
2. Remove the access panel covering the internal UPS batteries.
3. Connect the batteries.
4. Replace the access panel and the bezel.

Connect the External Battery Packs

1. Remove the access panel covering the external battery connector(s) on the rear of the UPS. *Not all models have an access panel*.
2. Connect the ground wire between units where appropriate.
3. Secure the battery connector(s) for the external battery pack(s) into the appropriate receptacles on the UPS.

NOTE: There may be multiple external battery packs in the system. Ensure that all external battery packs are connected.

Symmetra LX Models

Connect the Internal and External Batteries

1. Remove the bezels on the fronts of the UPS and the Extended Run Cabinets.
2. Connect the batteries. Use a coin to turn the switch counterclockwise to the ON position on each battery.
3. Replace the bezels.

Connect Equipment

1. Install equipment in the rack.
2. Connect equipment to the UPS or power distribution unit (PDU).

Operation

Start-Up Procedures

NOTE: The battery(s) may not be fully charged and may require 4 to 12 hours charging time to reach full charge. *Do not* expect full battery run capability during this initial charge period. Refer to www.apc.com for battery runtimes.

Perform the following where applicable.

- Turn on the AC utility circuit breaker.
- Turn on the UPS input circuit breaker.
- Turn on the transformer circuit breaker.
- Turn on the output for the UPS.

Smart-UPS

Press the

button located on the front panel to start the UPS. LEDs will illuminate after a few seconds.

Symmetra LX

Turn on the System Enable Switch located on the rear of the UPS. After a few seconds the Power View LCD on the front of the UPS will display the following information:

```
Chg100%
Load 000%
220 V in 000 V out 60Hz
Runtime: 00hr 30min
```

1. Press ‘Esc’ until the Main Menu appears. Use the up and down arrow keys to choose ‘Control’ and ENTER to select it.

>Control	Logging
Status	Display
Setup	Diags
Accessories	Help

2. Use the arrow keys and ENTER to select ‘Turn UPS Output On’. NOTE: At this point scroll down for more user selectable choices.

```
Graceful Turn Off
Start Runtime Cal
>Turn UPS Output On
```

3. Confirm choice by selecting ‘YES’.

```
Confirm:
Turn UPS On
CANCEL
>YES, Turn UPS On
```

4. There will be clicking sounds and this message will appear. NOTE: There may be multiple override warnings. Answer these by selecting ‘Start Now’.

```
 UPS HAS BEEN COMMANDED TO
    TURN LOAD POWER ON
```

5. In approximately 90 seconds, the green Load On indicator will illuminate and this message will appear.

```
      UPS LOAD IS ON
    Press any key...
```

APC Rack Manager

The Rack Manager is an option installed in all SX enclosure configurations and in some two and four post rack configurations. The Rack Manager device will be installed in the top rear section of the enclosure. The Rack Manager LCD will be located on the front of the enclosure or rack.

These are basic instructions. Refer to component documentation available on the Utility CD for detailed installation and operation instructions.

Rack Manager Options

Relocate Sensors

- Temperature and Temperature/Humidity sensors are installed, and can be relocated if desired.
- Additional sensor options can be purchased from APC.

Relocate Display

The Rack Manager LCD is installed in the enclosure door or mounted in the rack. The LCD can be relocated if desired.

Install User Inputs

Additional user inputs, including door sensors are available from APC.

Install Alarm Beacon

The alarm beacon is an optional accessory available from APC.

To install: Run the cable down through one of the openings in the top of the enclosure. Plug the cable into the Beacon port located on the Rack Manager.

The cable can be extended to a maximum of 100 m (330 ft), using RJ-45 couplings and standard CAT-5 cables.

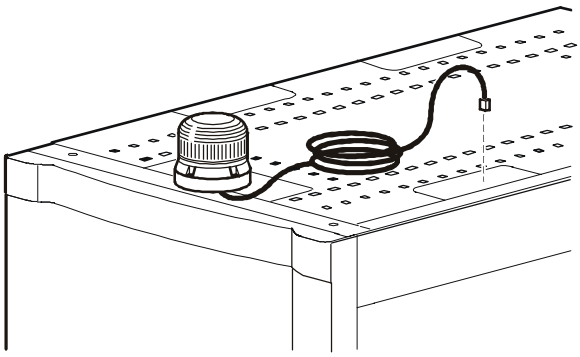

Network Connection

Connect the network communication cable to the Network Port located on the Rack Manager.

The Rack Manager can be accessed remotely through a network connection. To use this connection, the following TCP/IP settings must be configured.

- IP Address
- Subnet mask
- Default Gateway

Use one of the following methods to define the TCP/IP settings. Refer to component documentation available on the Utility CD for detailed instructions.

- APC Device IP Configuration Wizard: The wizard will automatically discover and configure the TCP/IP settings of the unconfigured Rack Manager remotely over the TCP/IP network. It will then allow the Rack Manager to be configured with TCP/IP settings supplied by the network administrator.
- Rack Manager Display: The TCP/IP settings can be selected through the display of the Rack Manager. Use values supplied by the network administrator.
- BOOTP or DHCP: A properly configured BOOTP or DHCP server can automatically provide TCP/IP settings to the Rack Manager.
- Local control console: Connect the Rack Manager to a local computer through a serial port connection. The local computer, using HyperTerminal® a terminal emulator, can configure the TCP/IP settings supplied by the network administrator.
- Remote control console: Any computer on the same subnet as the Rack Manger can configure the TCP/IP settings. Use ARP and Ping to assign an IP address, and Telnet to configure the other settings. Use values supplied by the network administrator.

NOTE: When operating the Rack Manager on the APC LAN of an InfraStruXure Manager Server, Rack Manager network and NTP settings will be automatically configured by the BOOTP server of the InfraStruXure Manager Server. To have the Rack Manager be accessible on a user LAN (a non-APC network), configure the Rack Manager as described above.

Liquid Crystal Display (LCD) Interface

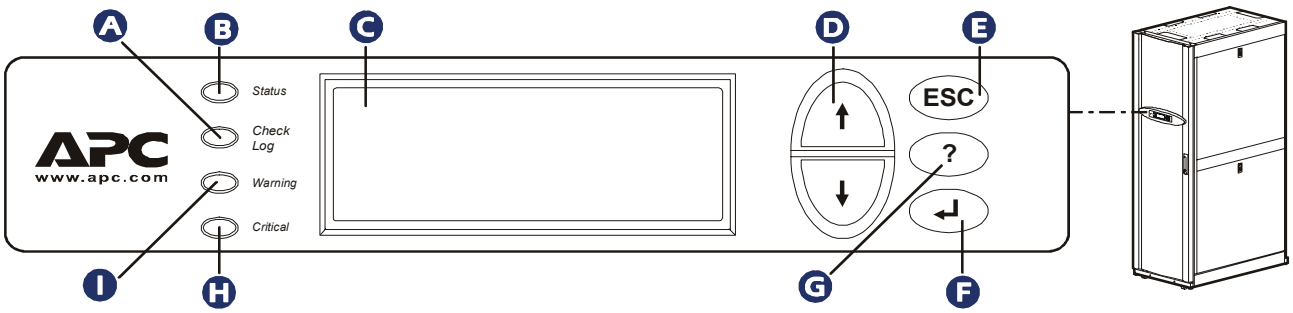

Item	Function
A Check Log LED	When yellow, at least one new event has occurred.
B Status LED	When green, no alarms are present.
C LCD Panel	View alarms, status data, instructional help, and modify configurable items.
D Up and down arrow keys	Select menu items and access information.
E ESC key	Return to previous screen.
F Enter key	Open menu items and input changes sensor, user input, and UPS settings.
G Help key	Display context-sensitive help. Press the help key for information about each option on the screen and for instructions on how to perform tasks.
H Critical Alarm LED	When red, a critical alarm condition exists and requires immediate attention.
I Warning Alarm LED	When yellow, a warning alarm condition exists. Failure to correct this condition could cause a critical alarm.

The Rack Manager has two data viewing modes:

1. The default setting shows scrolling status information about the system.
2. The navigation menu allows the user to select settings.

Scrolling Status Screens

The local display scrolls automatically and continuously through screens of status information. The specific information will vary depending on configuration and system status.

Status Screen Name	Status Information Displayed
UPS	• UPS name • Remaining runtime (in minutes) • Battery capacity • Load percent • Output voltage (VAC) • Input voltage (VAC) • Oper.frequency (HZ)
Environmental Sensor #n	• Sensor #n name • Temperature • Humidity • Status (Normal, Warning, or Critical)
User Input #n	• User input #n name • Input state (open or closed) • Status (Normal, Warning, or Critical)
Active Alarms	• Active alarms • System date/time

Press the up or down arrow key to interrupt the automatic scrolling and view a specific status screen. To return to the scrolling status screens, press ESC.

Menu Functions

Press the ENTER or ESC key on the display to open the menu screen.

Choosing an Option

Navigating and Selecting Menus

- Press the up or down navigation arrow key located on the display, to choose a menu option.
- Press the ENTER key to view the selected screen.
- Repeat these steps to navigate through the menus.

Scrolling Menu Options

Arrow indicators located on the right side of the LCD panel indicate that additional options are available. Press the up or down arrow key located on the display, to view the additional options.

Setting Values

Modifying Value Settings in Lists of Choices

- Input arrows next to a selected setting on the LCD panel indicate that the value can be modified.
- Use the up or down arrow keys on the display to select the desired value.
- Press the ENTER key to save the change or the ESC key to cancel the change.

Modifying Value Settings that are Numeric or Text Fields

- Use the up or down arrow keys on the display to select the value of the first character.
- Press the ENTER key to move to the next character.
- After the last character is set, press the ENTER key to exit the input mode and save the setting
- Press the ESC key to exit without saving the settings.
- If the SX system does not have a rack manager, the Network Management Card (NMC) in the UPS can be connected to the network for remote access to the UPS.

Maintenance

Refer to component documentation available on the Utility CD for detailed instructions concerning battery replacement in a UPS or an external battery pack.

Environmental factors impact battery life. High temperatures, poor utility power, and frequent, short duration discharges will shorten battery life. A monitoring and maintenance strategy for the UPS system is necessary to ensure maximum battery backup during utility power failure and fluctuation.

Pro-active monitoring through the included Rack Manager or Network Management Card is recommended. Ensure the UPS is located in an environment consistent with the specified temperature parameters.

Relocating the InfraStruXure System

If relocation of the InfraStruXure System should become necessary, ensure that appropriate safety precautions are utilized. The physical specifications of the system can be found in the unpacking literature that arrived with the system. This information is also available on the user documentation Utility CD.

When shipping the InfraStruXure System, batteries must be disconnected in compliance with DOT and IATA regulations.

Service

If the system requires service do not return it to the dealer. Follow these steps:

1. Review the problems discussed in *Troubleshooting* to eliminate common problems.
2. If the problem persists, contact APC Customer Support through the APC Web site, **www.apc.com**.
   - Note the model number of the system, the serial number located on the back of the unit, and the date purchased. If you call APC Customer Support, a technician will ask you to describe the problem and attempt to solve it over the phone. If this is not possible, the technician will issue a Returned Material Authorization Number (RMA#) for a specific component.
   - If the system is under warranty, repairs are free.
   - Procedures for servicing or returning products may vary internationally. Refer to the APC Web site for country specific instructions.

Troubleshooting

Use this chart to solve minor installation and operation problems. Refer to **www.apc.com** for assistance with complex problems. For problems relating a UPS refer to the appropriate component user manual.

Problem and/or Possible Cause	Solution
There is no power to connected equipment	
UPS output power is not on.	Refer to the *Operation* section in this manual or the UPS user manual.
Output circuit breakers are not switched on.	Ensure that all circuit breakers on rear of UPS are switched on.
Step-down transformer is not properly connected.	Ensure that the step-down transformer is plugged into the UPS and that the input and output circuit breakers are switched on.
Rack PDU is not connected.	Ensure that the rack PDU is connected to the UPS or step-down transformer (if applicable).
UPS will not turn on	
Battery is not connected.	Check that the battery connectors are fully engaged. Refer to the *Connect the UPS Batteries* section in this manual.
Utility power is not connected.	Check that utility power is connected and the circuit breakers are switched on.
Other UPS problems	Refer to the *Troubleshooting* section in the UPS user manual.
LCD is not turned on	
LCD is not connected to the rack.	Ensure that the cable is connected to both the LCD and the Rack Manager.
LCD displays “UPS: Communications lost”	
Rack Manager is not connected to the UPS.	Ensure that the black communications cable is connected to the serial port on both the Rack Manager and the UPS.
Temperature and Humidity are not reported correctly	
Temperature or Temp/Humidity probe is not connected.	Ensure that both probes are connected to the Rack Manager.

Regulatory and Warranty Information

Regulatory Agency Approvals and Radio Frequency Warnings

These regulatory approvals apply to the components installed in the enclosure or rack.

FCC Compliance Notice

This equipment has been tested and found to comply with the limits for a Class A digital device, pursuant to part 15 of the FCC Rules. These limits are designed to provide reasonable protection against harmful interference when the equipment is operated in a commercial environment. This equipment generates, uses, and can radiate radio frequency energy. If it is not installed and used in accordance with the instruction manual, it may cause harmful interference to radio communications. Operation of this equipment in a residential area is likely to cause harmful interference in which case users will be required to take whatever measures may be necessary to correct the interference at their own expense.

UPS products

120 V models

LISTED 42C2 E95463 LR63938 R3A031

警告使用者：
這是甲類的資訊產品，在居住的環境中使用時，可能會造成射頻干擾，在這種情況下，使用者會被要求採取某些適當的對策。

230 V models

N 394 ME61

Enclosures and Racks

120 V models

LISTED IT Rack System 18YC

Rack Manager

120 V models

LISTED I.T.E. E177299

230 V models

ME61

PDU products

120 V models

LISTED I.T.E. E177299 (株)エーピーシージャパン UL-US

230 V models

N 394 ME61

AMERICAN POWER CONVERSION LIMITED FACTORY WARRANTY

Single Phase InfraStruXure® Solution Factory Warranty[1]

The limited warranty provided by American Power Conversion (APC) in this Statement of Limited Factory Warranty applies only to products you purchase for your commercial or industrial use in the ordinary course of your business.

Terms of Warranty

American Power Conversion warrants that all components of the InfraStruXure® solution will be free from defect in material and workmanship for a period of two years from the date of start up when start up has been performed by APC authorized service personnel and occurs within six months of APC shipment date. If both Assembly and Start-up services are included in the original purchase and are also performed by APC authorized service personnel, APC offers an additional year of parts warranty at no additional charge. In the event that the system fails to meet the foregoing warranty criteria, the warranty would cover repairing or replacing defective parts at the sole discretion of APC for a period of two years from the shipment date. Under this warranty, APC will ship all parts to the customer site at no cost to be available the next business day after APC is notified of this requirement. If the customer chooses to upgrade the system to include an on site contract, APC offers modular service packages.

APC shall have no liability and no obligation to repair the installed unit if non-authorized APC personnel performed the start-up and such start-up caused the unit to be defective. Repairing or replacing defective products or parts thereof does not extend the original warranty period. Any parts furnished under this warranty may be new or factory remanufactured. When each point product is incorporated into an InfraStruXure® solution, the unit will be covered by the InfraStruXure® warranty; otherwise each point product will have a separate factory warranty when sold as a standalone unit. In cases where one warranty favors the customer over the other, the stronger of the two warranties will take precedence. The InfraStruXure® factory warranty covers only those parts appearing on the bill of materials for that solution.

Non-transferable Warranty

This warranty applies only to the original purchaser who must have properly registered the product. Product may be registered at http://warranty.apc.com. This warranty is not transferable or assignable without the prior written permission of APC.

Exclusions

APC shall not be liable under the warranty if its testing and examination discloses that the alleged defect in the product does not exist or was caused by your or any third person misuse, negligence, improper installation or testing, unauthorized attempts to repair or modify, wrong or inadequate electrical current or connection, inappropriate on site operation conditions, corrosive atmosphere, repair, installation, start-up by non-APC designated personal, a change in location or operating use, exposure to the elements, acts of God, fire, theft or installation contrary to APC recommendations or specifications, or in any event if the APC serial number has been altered, defaced or removed, or any other cause beyond the range of the intended use.

THERE ARE NO WARRANTIES, EXPRESS OR IMPLIED, BY OPERATION OF LAW OR OTHERWISE, OF PRODUCTS SOLD, SERVICED OR FURNISHED UNDER THIS AGREEMENT OR IN CONNECTION HEREWITH. APC DISCLAIMS ALL IMPLIED WARRANTIES OF MERCHANTABILITY, SATISFACTION AND FITNESS FOR A PARTICULAR PURPOSE. APC EXPRESS WARRANTIES WILL NOT BE ENLARGED, DIMINISHED, OR AFFECTED BY AND NO OBLIGATION OR LIABILITY WILL ARISE OUT OF, APC RENDERING OF TECHNICAL OR OTHER ADVICE OR SERVICE IN CONNECTION WITH THE PRODUCTS. THE FOREGOING WARRANTIES AND REMEDIES ARE EXCLUSIVE AND IN LIEU OF ALL OTHER WARRANTIES AND REMEDIES. THE WARRANTIES SET FORTH ABOVE CONSTITUTE APC SOLE LIABILITY AND PURCHASER'S EXCLUSIVE REMEDY FOR ANY BREACH OF SUCH WARRANTIES. APC WARRANTIES RUN ONLY TO PURCHASER AND ARE NOT EXTENDED TO ANY THIRD PARTIES.

IN NO EVENT SHALL APC, ITS OFFICERS, DIRECTORS, AFFILIATES OR EMPLOYEES BE LIABLE FOR ANY FORM OF INDIRECT, SPECIAL, CONSEQUENTIAL OR PUNITIVE DAMAGES, ARISING OUT OF THE USE, SERVICE OR INSTALLATION, OF THE PRODUCTS, WHETHER SUCH DAMAGES ARISE IN CONTRACT OR TORT, IRRESPECTIVE OF FAULT, NEGLIGENCE OR STRICT LIABILITY OR WHETHER APC HAS BEEN ADVISED IN ADVANCE OF THE POSSIBILITY OF SUCH DAMAGES. SPECIFICALLY, APC IS NOT LIABLE FOR ANY COSTS, SUCH AS LOST PROFITS OR REVENUE, LOSS OF EQUIPMENT, LOSS OF USE OF EQUIPMENT, LOSS OF SOFTWARE, LOSS OF DATA, COSTS OF SUBSTITUANTS, CLAIMS BY THIRD PARTIES, OR OTHERWISE.

NO SALESMAN, EMPLOYEE OR AGENT OF APC IS AUTHORIZED TO ADD TO OR VARY THE TERMS OF THIS WARRANTY. WARRANTY TERMS MAY BE MODIFIED, IF AT ALL, ONLY IN WRITING SIGNED BY AN APC OFFICER AND LEGAL DEPARTMENT.

Warranty Claims

Customers with warranty claims issues may access the APC worldwide customer support network through www.apc.com. Select your country from the country selection pull-down menu. Open the Support tab at the top of the web page to obtain contact information for customer support in your region

Post Warranty Support

After the end of the factory warranty period stated above, and provided that the customer has not purchased an extended service contract from APC, all repairs to the unit will be done on a "time and materials" basis. In such a case, should the unit fail, the customer will be responsible for payment for any spare parts, travel and labor needed to repair the unit. Pricing for parts, travel and labor will be generated from the APC standard current price list for such items appropriate to the region in which the unit is installed, as it may be updated and revised from time to time. Parts replaced will come with the standard APC warranty for such items for three months from the date of installation into the unit. The APC standard parts warranty will apply to only the replaced part(s). This warranty applies only to the original purchaser who must have properly registered the product. Products may be registered at http://warranty.apc.com.

[1]APC single phase products covered under this warranty include all Smart-UPS® products, Matrix UPS® products, and all single phase Symmetra® products. Products purchased as part of an InfraStruXure® single phase solution are covered under a separate ISXTM warranty. Accessories covered under this warranty include rack power distribution units (PDU), Management Cards, RM KVM Switch, RM Keyboard Monitor, and Air Distribution/Fan products.

APC Worldwide Customer Support

Customer support for this or any other APC product is available at no charge in any of the following ways:

- Refer to the APC Web site to access documents in the APC Knowledge Base and to submit customer support requests.
  - **www.apc.com** (Corporate Headquarters)
    Connect to localized APC Web sites for specific countries, each of which provides customer support information.
  - **www.apc.com/support/**
    Global support searching APC Knowledge Base and using e-support.
- Contact an APC Customer Support center by telephone or e-mail.
  Local, country-specific centers: go to **www.apc.com/support/contact** for information.

Contact the APC representative or other distributor from whom you purchased your APC product for information on how to obtain local customer support.

Entire contents copyright 2006 American Power Conversion Corporation. All rights reserved. Reproduction in whole or in part without permission is prohibited.

APC, the APC logo, Smart-UPS, Symmetra, NetShelter, and PowerChute are trademarks of American Power Conversion Corporation. All other trademarks, product names, and corporate names are the property of their respective owners and are used for informational purposes only.

www.apc.com