OptiLine 50

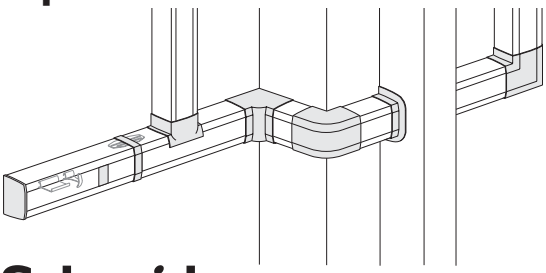

Plastic trunking, sizes 80 & 100

INS12100
INS12150
INS12200
INS12250

Installation

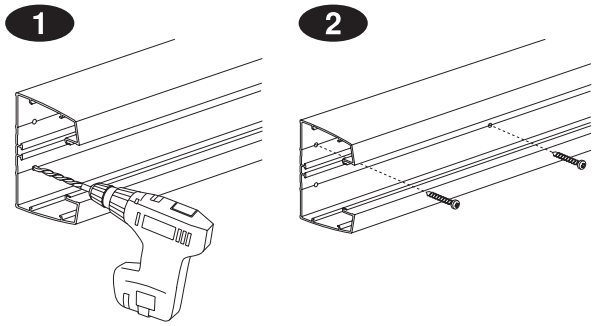

Installation of cable shelf/cable retainer

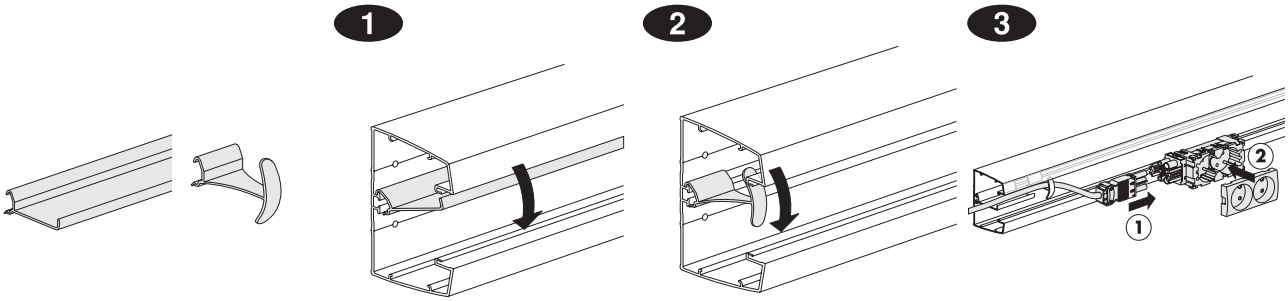

Installation of external corner

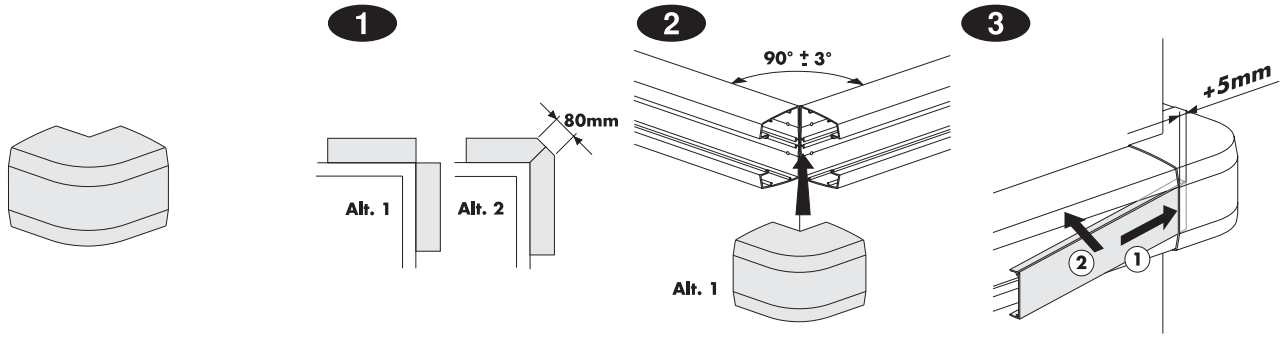

Installation of internal corner

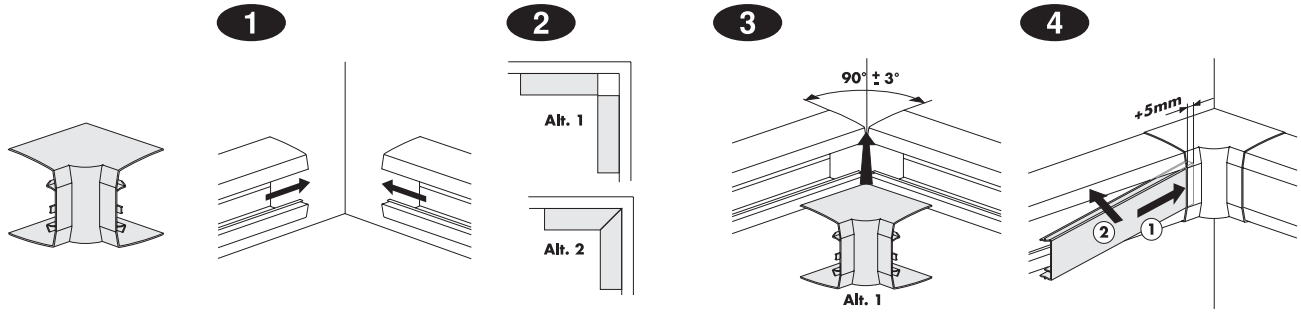

Installation of jointing piece

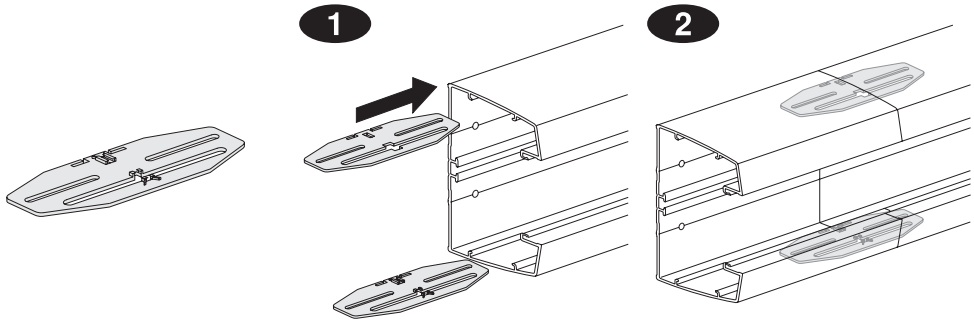

Installation of joint cover-piece kit

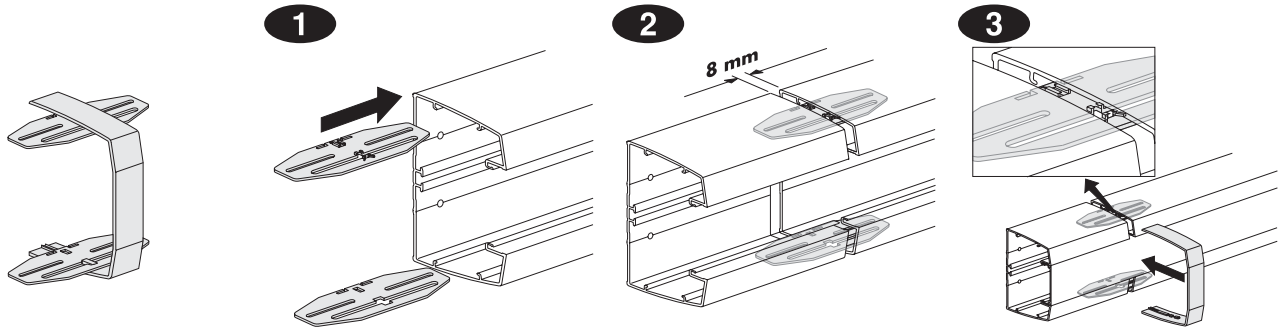

Installation of joint cover piece for front cover

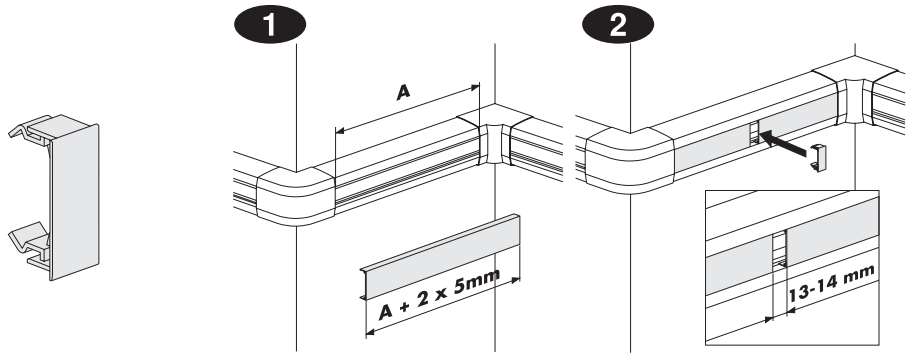

Installation of bend kit, 90°

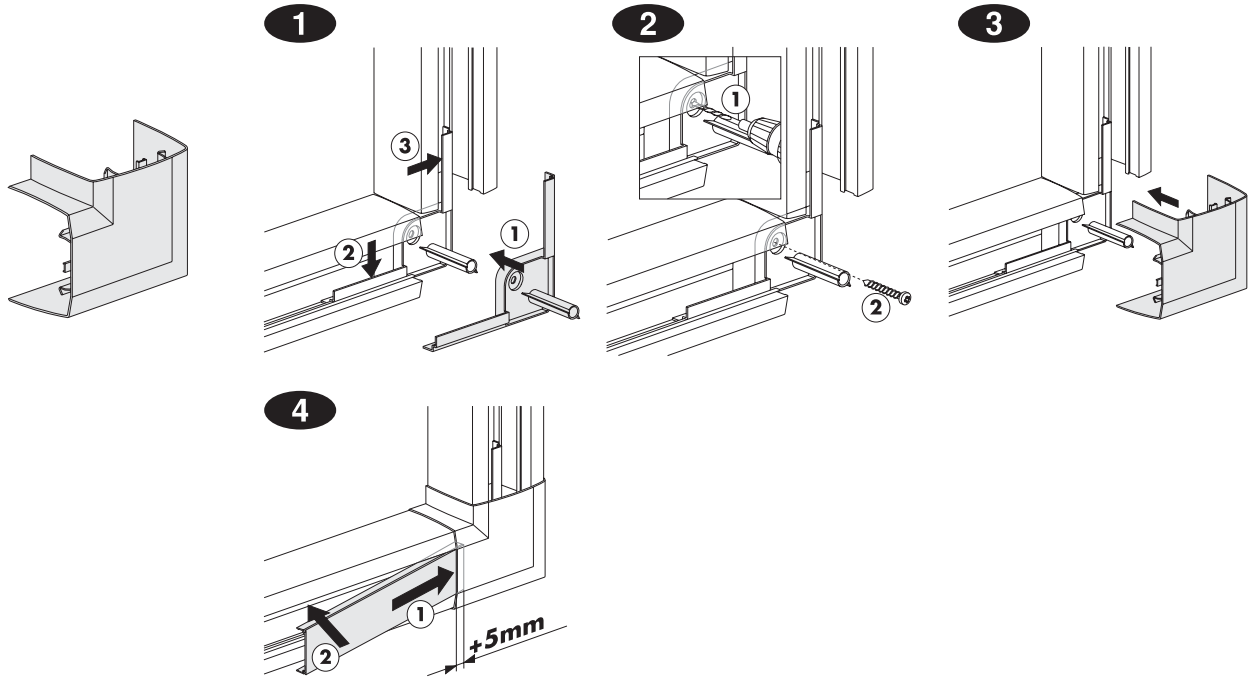

Installation of T-piece

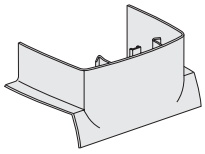

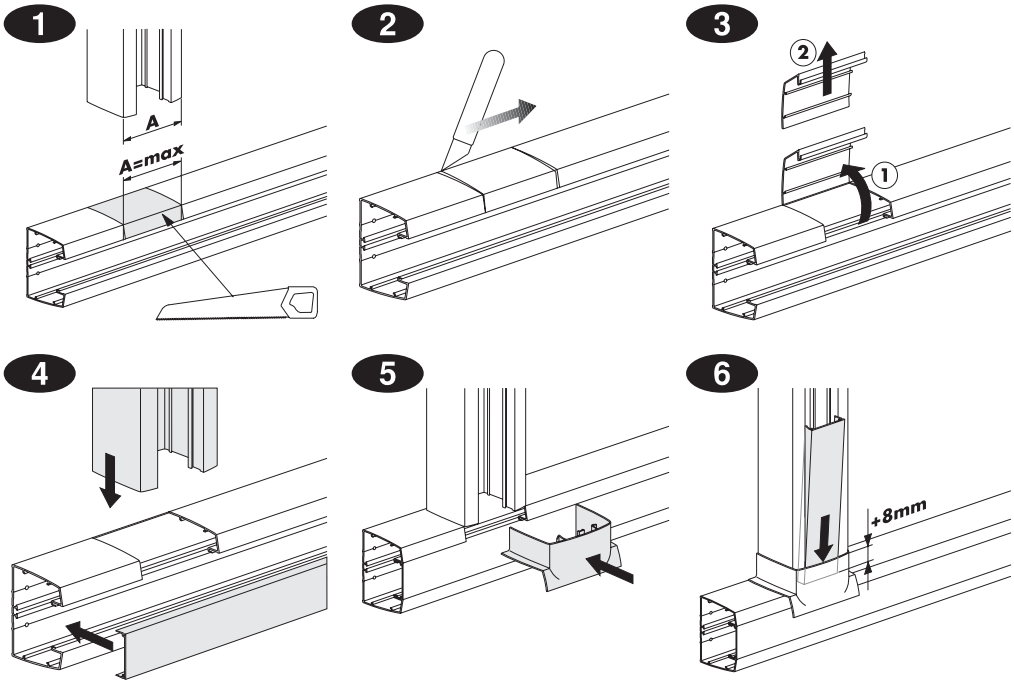

Installation of stop end

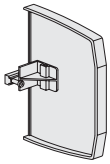

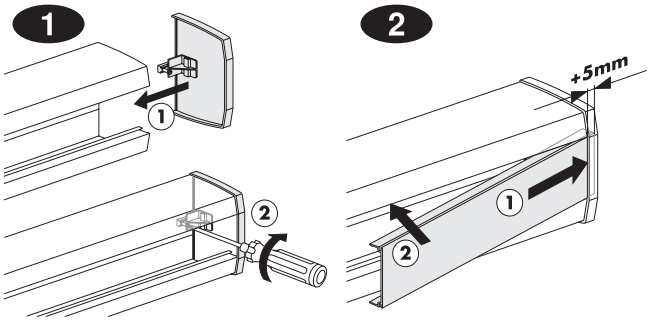

Installation of wall/ceiling frame

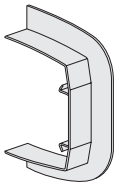

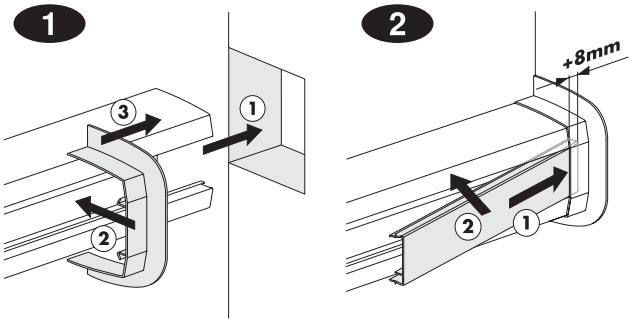

Installation of cable bending protection

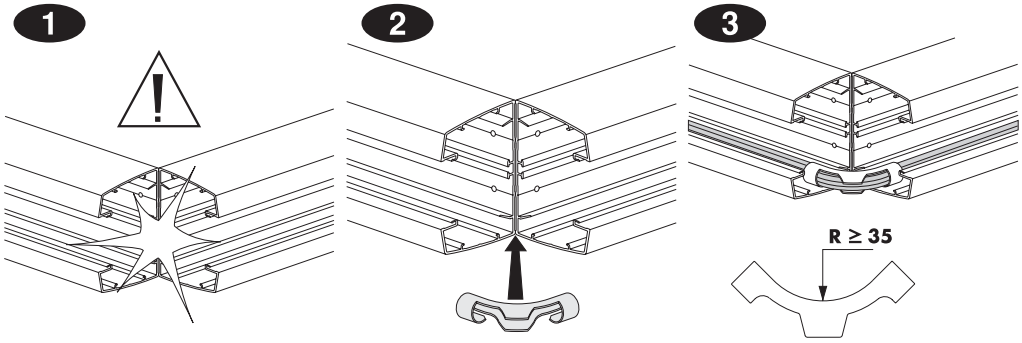

Dismounting

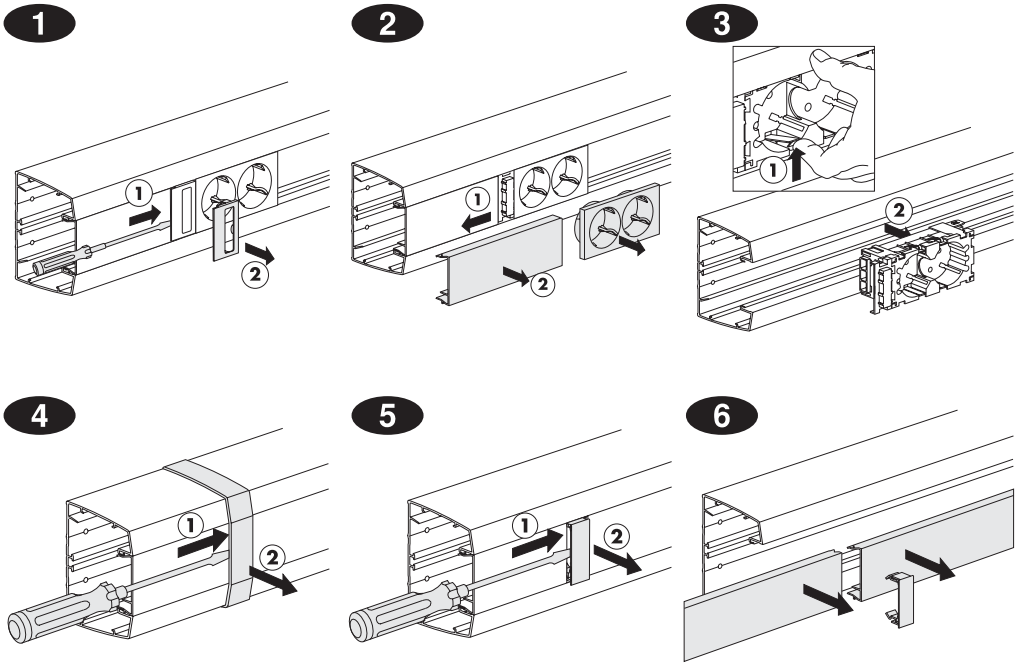

Art.No. 20060798 / 0902