TAC Xenta

Network Repeater FTT-10

C-96-05

2000-10-16

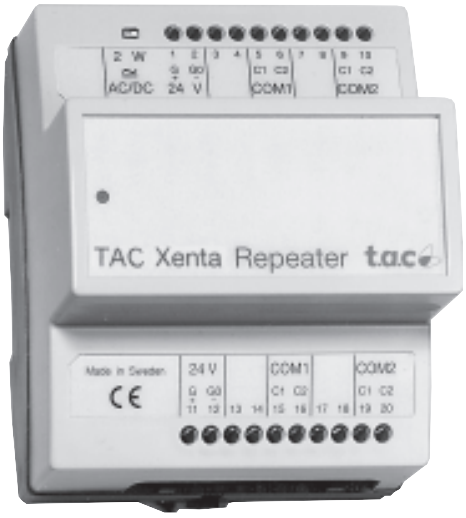

The TAC Xenta® Repeater FTT-10 is a physical layer repeater unit which amplifies the signal on a LonWorks® FT-10 network cable, but does not affect the traffic in any other way.

By connecting two network segments with a Repeater the physical range of the network can be increased.

TECHNICAL DATA

Supply voltage ..... 8–28 V AC, 50/60 Hz
..... or 8–40 V DC

Power consumption ..... max. 1,5 W

Ambient temperature:
- Storage ..... –20 °C to +75 °C
- Operation ..... 0 °C to +75 °C

Humidity ..... max. 90% RH non-condensing

Mechanical:
- Enclosure ..... ABS/PC
- Enclosure rating ..... IP 20
- Dimensions (mm) ..... see diagram
- Weight ..... 0,5 kg

Communication:
- LonWorks ..... TP/FT-10, screw terminal
- Max. segment length ..... see table on next page

No. of Repeaters ..... at most one between any two Routers

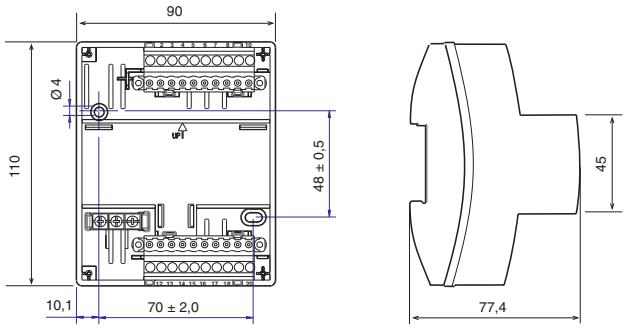

Agency Compliances:
- Emission ..... EN 50081-1
- Immunity ..... EN 50082-1
- Safety ..... EN 61010-1

Part number:
- TAC Xenta Repeater FTT-10 0-073-0912

DESIGN AND MOUNTING

The TAC Xenta Repeater is cabinet mounted on a TS 35 mm Norm rail. The unit consists of two parts; a terminal part including the screw terminals, and an electronics part holding the circuit boards. The terminal part can be pre-mounted in the cabinet, see figure 1.

The Power supply and the Communication connections can be made either to the upper or the lower terminals as they are internally connected.

The unit can also be wall mounted and for box mounting a wide range of standardised boxes are available.

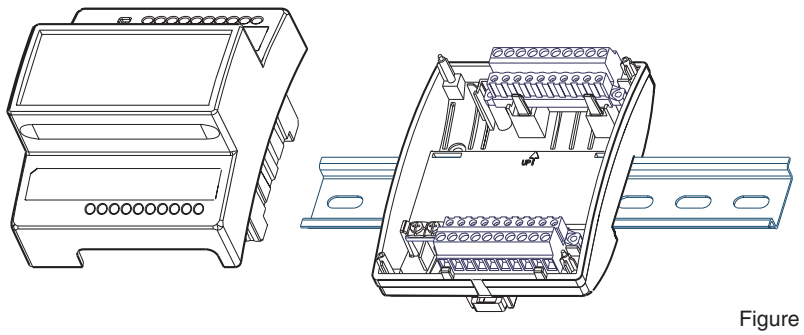

Figure 1

CABLES AND COMMUNICATION

G and G0:
Min. cross-sectional area 0,75 and 1,5 mm².

C1 and C2:
TAC Xenta units communicate with each other using a common network, LonWorks TP/FT-10, 78 kbps.

TP/FT-10 allows the user to wire the control devices with virtually no topology restrictions.

The max. wire distance in one segment depends on the type of wire and the topology.

When the network is designed the following cable types must be used. See also the TAC Xenta Network guide for more details.

Cable	Max. bus length, doubly terminated bus topology (m)	Max. node-to-node distance, singly terminated free topology (m)	Max. length, singly terminated free topology (m)
Belden 85102, single twisted pair	2700	500	500
Belden 8471, single twisted pair	2700	400	500
UL Level IV 22AWG, twisted pair	1400	400	500
Siemens J-Y(st)Y 2x2x0.8 4-wire helical twist, solid, shielded	900	320	500
TIA568A Cat.5 24AWG, twisted pair	900	250	450

CONFIGURATION ADVICE

The Repeater connects two segments, each with a maximum length according to the table above.

If no Router is present, up to three Repeaters may be used to extend the range.

If Routers are used, at most one Repeater is allowed between any two Routers.

Note! Do not forget to terminate each new segment.

INSTALLATION

There is a label on the front of the controller with both the numbers and the names of the terminals (1 G, 2 G0 and so on). The numbers are also moulded in the plastic of the terminal part.

LED indicator
A green indicator on the front indicates that the power is on.

Terminal connections

Term. no.	Term. name	Description
1, 11	G	24 V AC or DC
2, 12	G0	24 V common
5, 15	C1	LonWorks TP/FT-10 "In"
6, 16	C2	
9, 19	C1	LonWorks TP/FT-10 "Out"
10, 20	C2	

MAINTENANCE

The only care needed is to keep the repeater dry and to clean it externally with a dry cloth when needed.