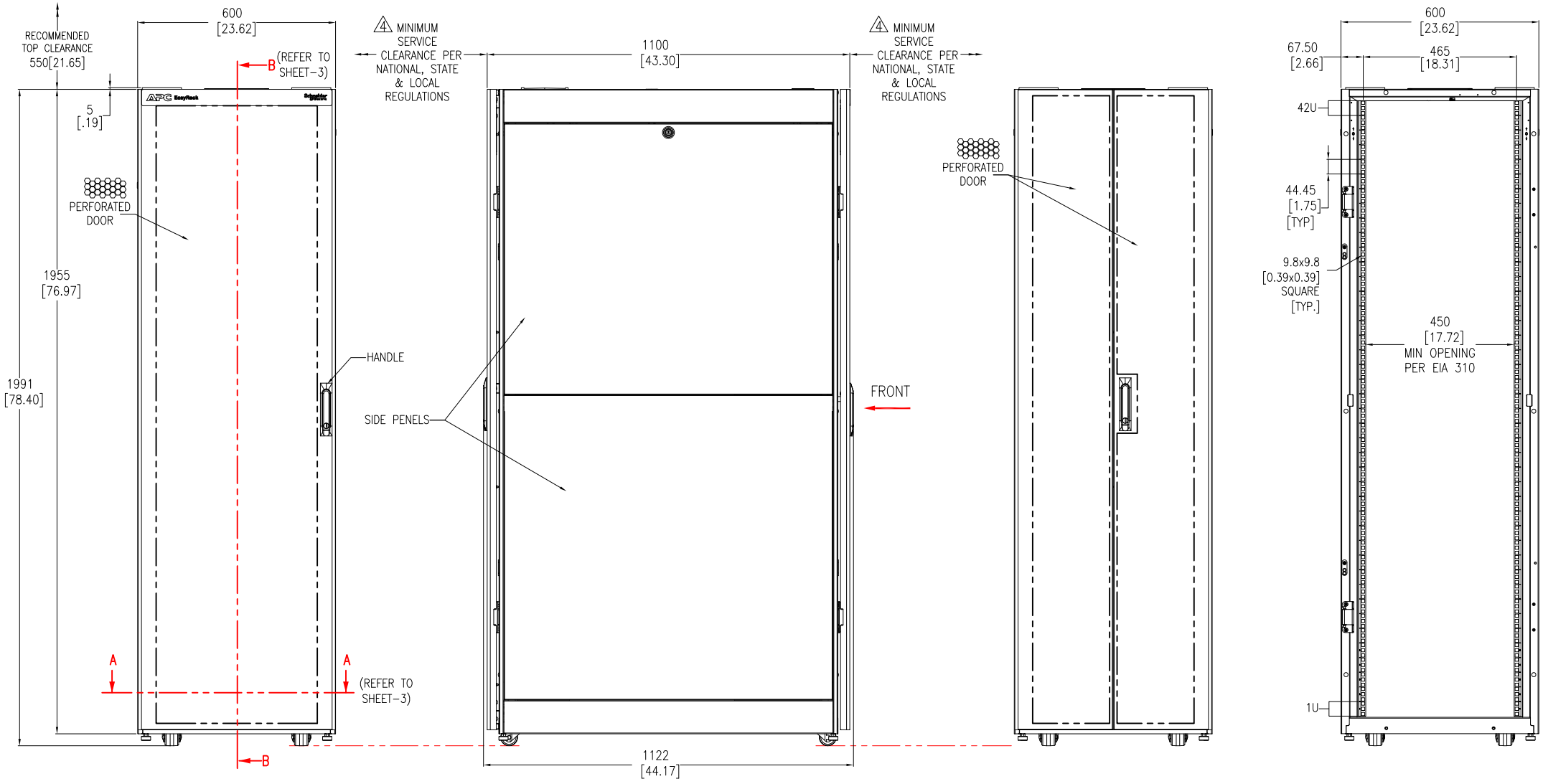

NOTES:

1. INSTALLATION SHALL COMPLY WITH ALL APPLICABLE NATIONAL, STATE AND LOCAL ELECTRICAL REGULATIONS.
2. REFER TO PRODUCT DOCUMENTATION FOR ADDITIONAL DETAILS PRIOR TO INSTALLATION AND SITE PREPARATION WORK.
3. ALL DIMENSIONS ARE IN MILLIMETERS [INCHES].
4. △ FRONT AND REAR ACCESS REQUIRED FOR SERVICE. MINIMUM REQUIRED FRONT/REAR CLEARANCE IS 36.0 [914].
5. NET WEIGHT OF THE EMPTY UNIT IS 105.2 kg [231.93 lb].
6. LOADING CAPACITY:
   a) STATIC LOAD: 1200kg [2645.5 lb].
   b) DYNAMIC LOAD: 600kg [1322.7 lb]
7. TOP AND BOTTOM CABLE ENTRY USING APPROPRIATE CUSTOMER PROVIDED SOLUTION.
8. COLOR: BLACK.

THIS DRAWING AND SPECIFICATIONS HEREIN ARE THE PROPERTY OF SCHNEIDER ELECTRIC AND SHALL NOT BE COPIED, REPRODUCED OR USED IN WHOLE OR IN PART, AS THE BASIS FOR THE MANUFACTURE OR SALE OF ITEMS WITHOUT WRITTEN PERMISSION FROM SCHNEIDER ELECTRIC. THIS DRAWING IS BASED UPON LATEST AVAILABLE INFORMATION AND IS SUBJECT TO CHANGE WITHOUT NOTICE.

Schneider Electric

TITLE: Easy RACK 42U 600mm Wide x 1100mm Deep GENERAL ARRANGEMENT	DWG NO: ER6212		REV. 0
	DRAWN BY: JAYAPRAKASH	08-DEC-20	FIRST ANGLE PROJECTION
	ENGINEER: Job GU	08-DEC-20	
PROJECT: SUBMITTAL DRAWINGS / SHEET 1 OF 3	APPROVED BY: Job GU	08-DEC-20	

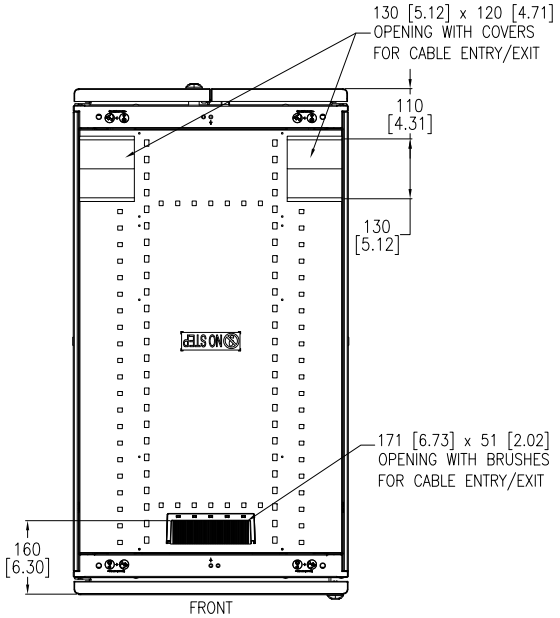

TOP VIEW

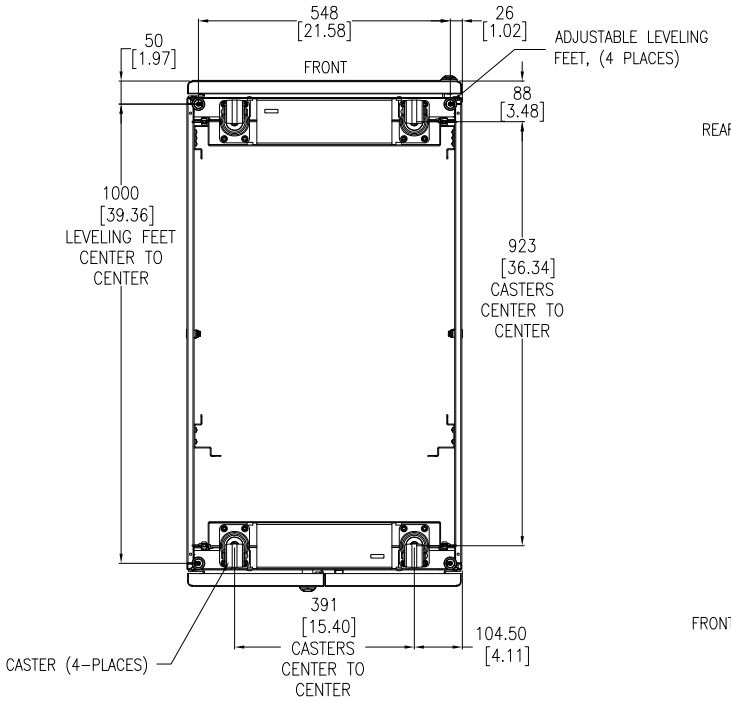

BOTTOM VIEW
(TOP COVER NOT SHOWN FOR CLARITY)

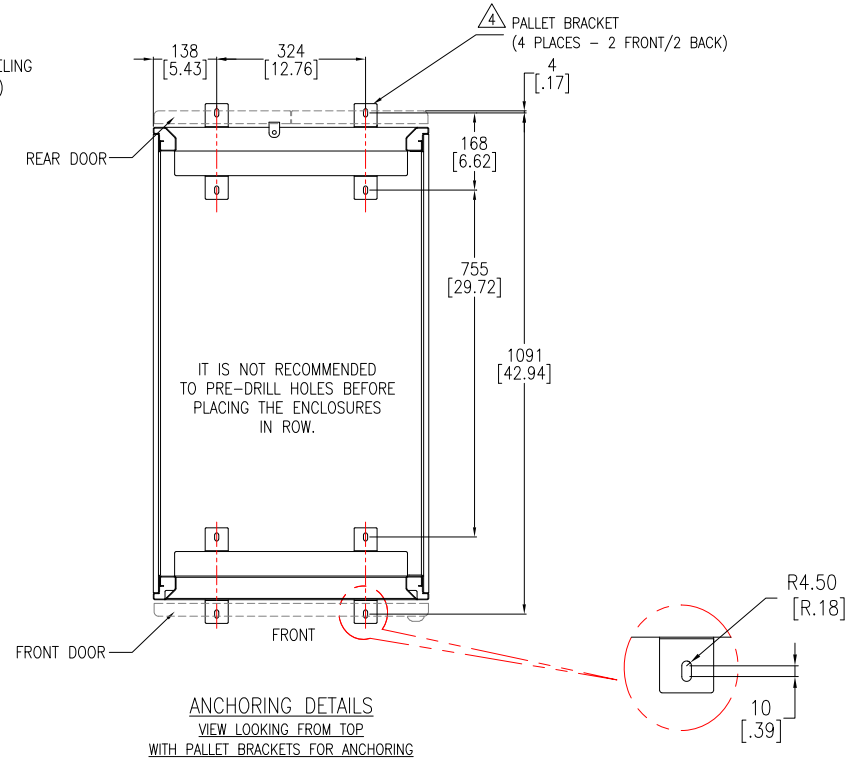

ANCHORING DETAILS
VIEW LOOKING FROM TOP
WITH PALLET BRACKETS FOR ANCHORING
(TOP COVER & SOME OTHER COMPONENTS ARE
NOT SHOW FOR CLARITY)

STABILIZING THE ENCLOSURE:
TO PREVENT THE ENCLOSURE FROM MOVING FROM ITS FINAL LOCATION
(IF NOT JOINED WITH ANOTHER COMPONENT, USE PALLET/ANCHORING BRACKET)
ATTACH THE PALLET/ANCHORING BRACKETS TO THE ENCLOSURE AS SHOWN.
USE CODE COMPLIANT FASTENERS TO SECURE THE ENCLOSURE TO THE FLOOR.

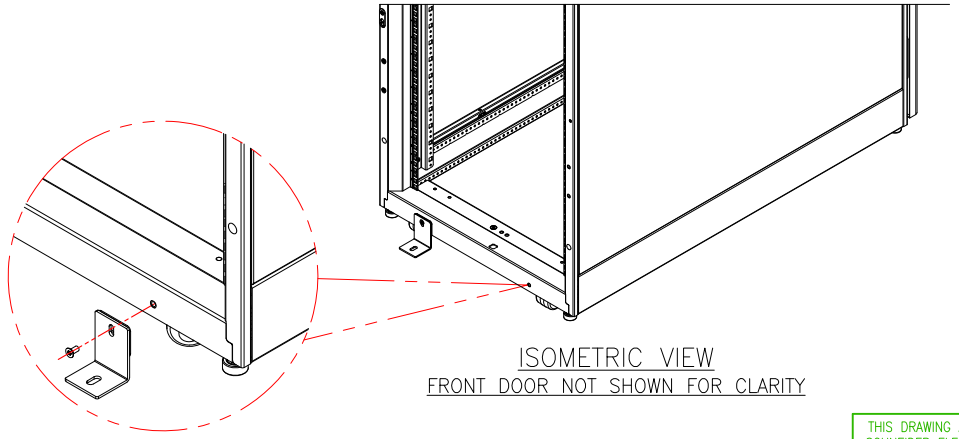

ISOMETRIC VIEW
FRONT DOOR NOT SHOWN FOR CLARITY

(4 PLACES – 2-FRONT/2-BACK)
ENLARGED VIEW

NOTES:
1. INSTALLATION SHALL COMPLY WITH ALL APPLICABLE NATIONAL, STATE AND LOCAL ELECTRICAL REGULATIONS.
2. REFER TO PRODUCT DOCUMENTATION FOR ADDITIONAL DETAILS PRIOR TO INSTALLATION AND SITE PREPARATION WORK.
3. ALL DIMENSIONS ARE IN MILLIMETERS [INCHES].
△ 4. PALLET/ANCHORING BRACKETS ARE PROVIDED WITH THE ENCLOSURE AND ARE SECURED TO THE ENCLOSURE AND PALLET FOR SHIPMENT. RETAIN THE PALLET BRACKETS FROM SHIPMENT. THESE BRACKETS ARE USED TO ANCHOR THE ENCLOSURE ONCE INSTALLED. PALLET/ANCHORING BRACKETS CAN BE INSTALLED EITHER INSIDE OR OUTSIDE THE NetShelter WITH TWO AT FRONT AND TWO IN BACK.

THIS DRAWING AND SPECIFICATIONS HEREIN ARE THE PROPERTY OF SCHNEIDER ELECTRIC AND SHALL NOT BE COPIED, REPRODUCED OR USED IN WHOLE OR IN PART, AS THE BASIS FOR THE MANUFACTURE OR SALE OF ITEMS WITHOUT WRITTEN PERMISSION FROM SCHNEIDER ELECTRIC. THIS DRAWING IS BASED UPON LATEST AVAILABLE INFORMATION AND IS SUBJECT TO CHANGE WITHOUT NOTICE.

Schneider Electric

TITLE: Easy RACK 42U 600mm Wide x 1100mm Deep TOP/BOTTOM & ANCHORING DETAILS	DWG NO: ER6212		REV. 0
	DRAWN BY: JAYAPRAKASH	08-DEC-20	FIRST ANGLE PROJECTION
	ENGINEER: Job GU	08-DEC-20	
PROJECT: SUBMITTAL DRAWINGS SHEET 2 OF 3	APPROVED BY: Job GU	08-DEC-20	

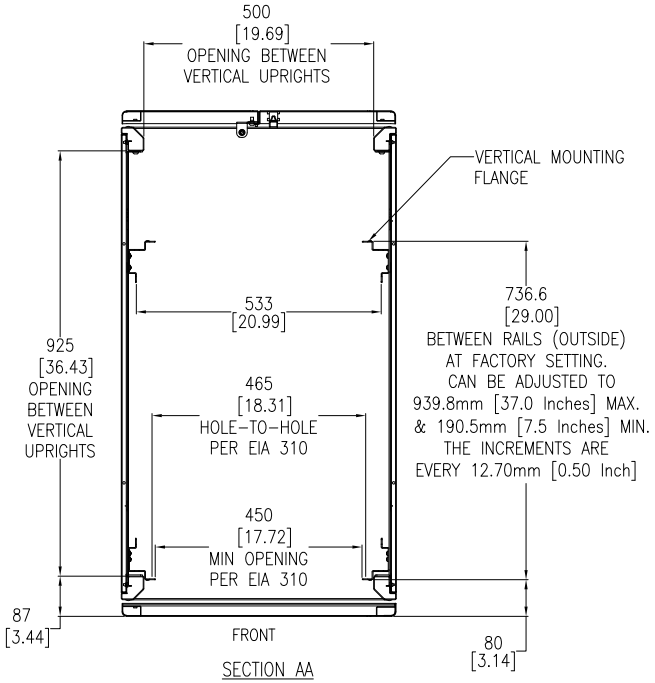

SECTION AA

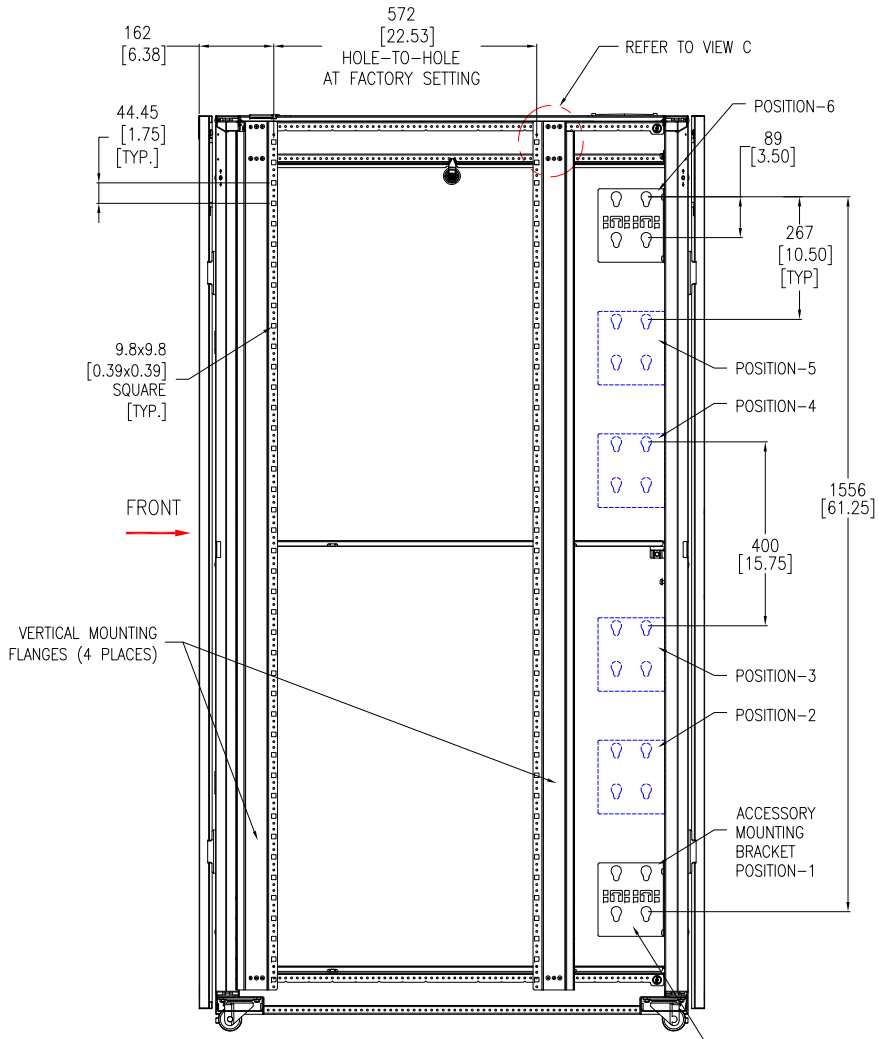

SECTION BB

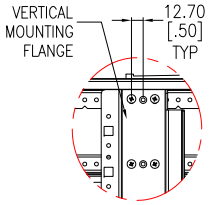

VIEW-C (ENLARGED)

NOTE:
THERE ARE SIX POSITIONS ON EACH SIDE OF THE ENCLOSURE
FOR INSTALLING ACCESSORY MOUNTING BRACKETS.
4 ACCESSORY MOUNTING BRACKETS ARE PROVIDED STANDARD
WITH THE ENCLOSURE, 2 ON THE RIGHT SIDE AND 2 ON THE LEFT SIDE
OF REAR OF THE UNIT LOCATED AT POSITIONS 6 & 1.
OTHER BRACKETS ARE AVAILABLE FOR PURCHASE AS SKU ER7PDUBRKT.
FULL ENCLOSURE HEIGHT ACCESSORIES. Eg. VERTICAL 0-U RACK PDUs
UTILIZE STANDARD ACCESSORY MOUNTING BRACKET POSITIONS 6 & 1 AND
HALF HEIGHT ACCESSORIES. E.g. VERTICAL CABLE ORGANIZERS UTILIZE
MOUNTING BRACKET POSITIONS 6 & 4 OR 3 & 1.

NOTES:
1. INSTALLATION SHALL COMPLY WITH ALL APPLICABLE NATIONAL, STATE AND LOCAL ELECTRICAL REGULATIONS.
2. REFER TO PRODUCT DOCUMENTATION FOR ADDITIONAL DETAILS PRIOR TO INSTALLATION AND SITE PREPARATION WORK.
3. ALL DIMENSIONS ARE IN MILLIMETERS [INCHES].

THIS DRAWING AND SPECIFICATIONS HEREIN ARE THE PROPERTY OF SCHNEIDER ELECTRIC AND SHALL NOT BE COPIED, REPRODUCED OR USED IN WHOLE OR IN PART, AS THE BASIS FOR THE MANUFACTURE OR SALE OF ITEMS WITHOUT WRITTEN PERMISSION FROM SCHNEIDER ELECTRIC. THIS DRAWING IS BASED UPON LATEST AVAILABLE INFORMATION AND IS SUBJECT TO CHANGE WITHOUT NOTICE.

Schneider Electric

TITLE: Easy RACK 42U 600mm Wide x 1100mm Deep SECTION VIEWS	DWG NO: ER6212		REV. 0
	DRAWN BY: JAYAPRAKASH	08-DEC-20	FIRST ANGLE PROJECTION
	ENGINEER: Job GU	08-DEC-20	
PROJECT: SUBMITTAL DRAWINGS	SHEET 3 OF 3	APPROVED BY: Job GU	08-DEC-20