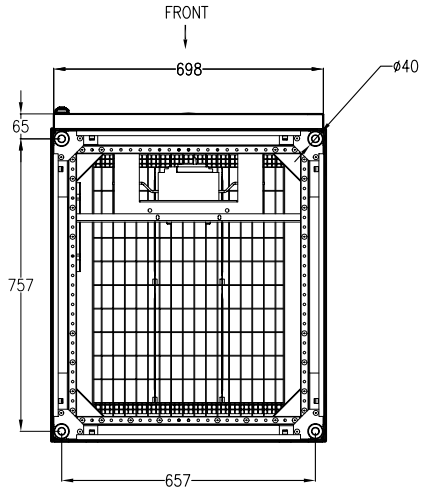

BOTTOM VIEW

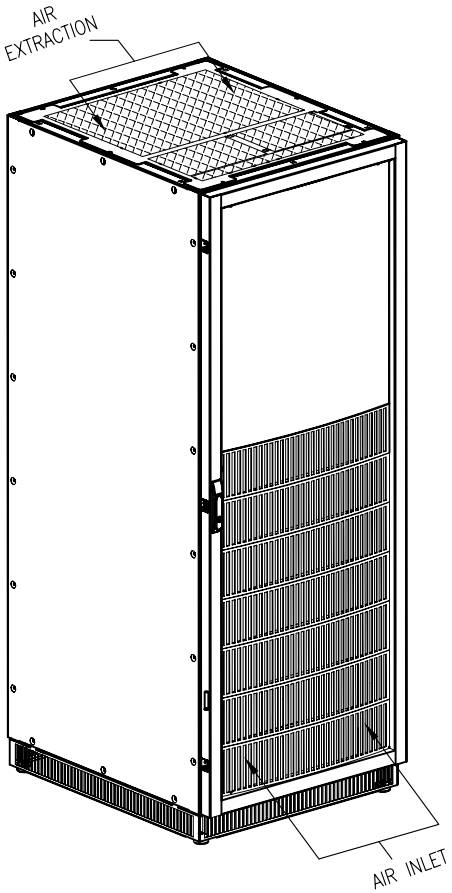

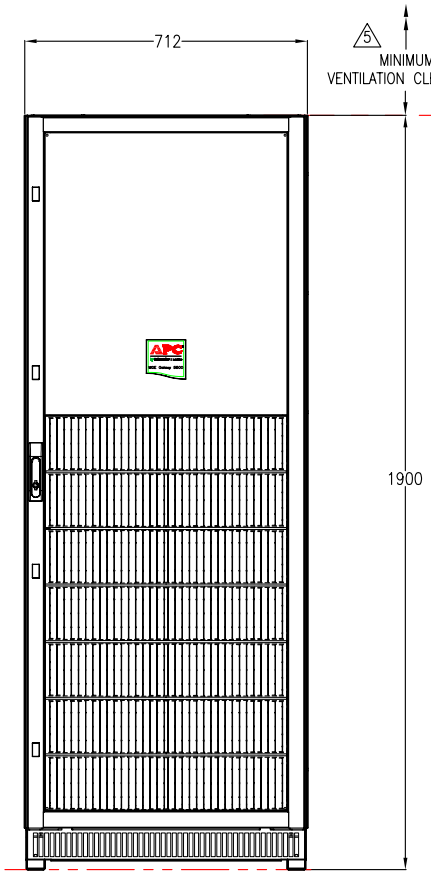

FRONT VIEW

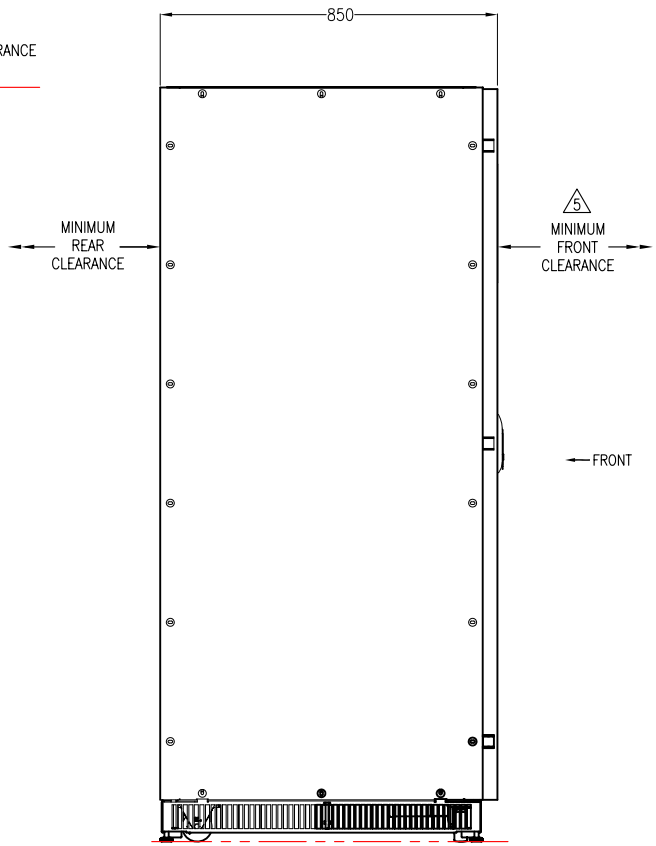

LEFT SIDE VIEW

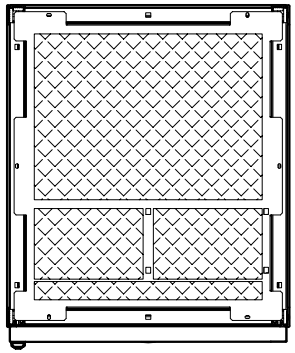

TOP VIEW

NOTES:

1. INSTALLATION SHALL COMPLY WITH ALL APPLICABLE NATIONAL, STATE AND LOCAL ELECTRICAL REGULATIONS.
2. PLEASE REFER TO PRODUCT MANUALS FOR ADDITIONAL DETAILS PRIOR TO INSTALLATION AND SITE PREPARATION WORK.
3. ALL DIMENSIONS ARE IN MILLIMETERS. UNLESS OTHERWISE SPECIFIED.
4. COLOR: CHARCOAL.
5. △ RECOMMENDED CLEARANCE IS SUBJECT TO NATIONAL AND LOCAL CODES
   800mm RECOMMENDED FRONT CLEARANCE.
   400mm RECOMMENDED TOP CLEARANCE FOR VENTILATION.
6. THE BATTERY MUST BE STORED IN A DRY AND WELL-AIRED LOCATION.
7. THE BATTERY CELLS CAN BE STORED AT A TEMPERATURE BETWEEN -20° C AND +45° C.
8. BATTERY STORAGE OR PROLONGED SHUTDOWN SHOULD NEVER EXCEED 3 MONTHS AT 20° C OR 2 MONTHS AT 30° C WITHOUT RECHARGING.
9. AFTER THE RECOMMENDED MAXIMUM STORAGE, THE BATTERY MUST BE CHARGED, REQUIRING PARTIAL START-UP OF THE EQUIPMENT.
10. BATTERY LIFE IS EXTENDED WHEN IT IS INSTALLED IN A ROOM WITH AN AMBIENT TEMPERATURE OF 15 TO 25° C. ABOVE 25° C, BATTERY LIFE REDUCED BY 50% FOR EVERY ADDITIONAL 10° C.
11. WEIGHT OF UNIT
    WITHOUT BATTERIES - 180kg.
    WITH BATTERIES (MAX) - 890kg.

THIS DRAWING AND SPECIFICATIONS HEREIN ARE THE PROPERTY OF SCHNEIDER ELECTRIC AND SHALL NOT BE COPIED, REPRODUCED OR USED IN WHOLE OR IN PART, AS THE BASIS FOR THE MANUFACTURE OR SALE OF ITEMS WITHOUT WRITTEN PERMISSION FROM SCHNEIDER ELECTRIC. THIS DRAWING IS BASED UPON LATEST AVAILABLE INFORMATION AND IS SUBJECT TO CHANGE WITHOUT NOTICE.

Schneider Electric

TITLE: MGE GALAXY 5500 BATTERY CUBICAL 712mm MAIN MECHANICAL & ISOMETRIC VIEW	DWG NO: G55TBATL7		REV. 0
	DRAWN: SHAHID ALI	25-JUN-12	FIRST ANGLE PROJECTION
	ENGINEER: Y NGUYEN	25-JUN-12	
PROJECT: SUBMITTALS DRAWINGS SHEET 1 OF 2	APPROVED: J CAMPBELL/C LARSEN	25-JUN-12	

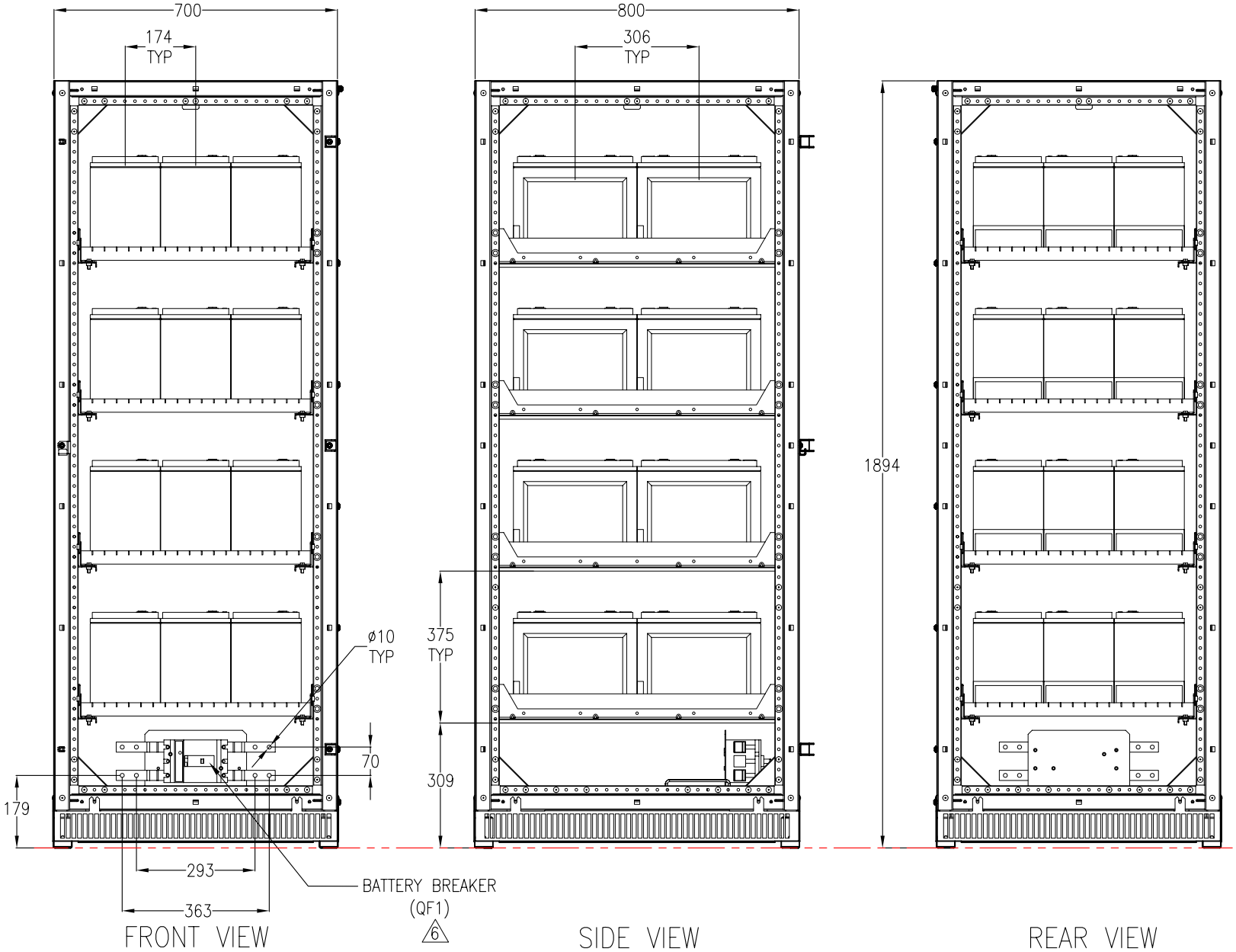

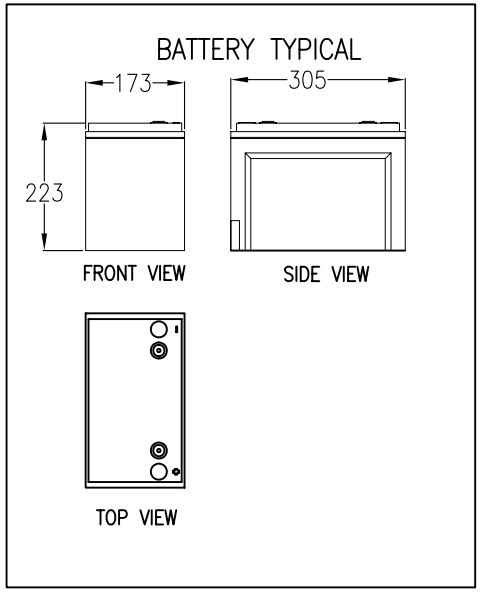

NOTES:

1. INSTALLATION SHALL COMPLY WITH ALL APPLICABLE NATIONAL AND LOCAL ELECTRICAL REGULATIONS.
2. PLEASE REFER TO PRODUCT MANUALS FOR ADDITIONAL DETAILS PRIOR TO INSTALLATION AND SITE PREPARATION WORK.
3. ALL DIMENSIONS ARE IN MILLIMETERS UNLESS OTHERWISE SPECIFIED.
4. SOME STRUCTURAL DETAILS HAVE BEEN OMITTED FOR THE PURPOSE OF CLARITY.
5. BATTERIES SHOWN ARE TYPICAL.
6. △ IF MORE THAN ONE BATTERY CABINET IS USED, THIS BREAKER WILL BE AVAILABLE IN THE FIRST CABINET ONLY.

THIS DRAWING AND SPECIFICATIONS HEREIN ARE THE PROPERTY OF SCHNEIDER ELECTRIC AND SHALL NOT BE COPIED, REPRODUCED OR USED IN WHOLE OR IN PART, AS THE BASIS FOR THE MANUFACTURE OR SALE OF ITEMS WITHOUT WRITTEN PERMISSION FROM SCHNEIDER ELECTRIC. THIS DRAWING IS BASED UPON LATEST AVAILABLE INFORMATION AND IS SUBJECT TO CHANGE WITHOUT NOTICE.

Schneider Electric

TITLE: MGE GALAXY 5500 BATTERY CUBICAL 712mm INTERNAL VIEW	DWG NO: G55TBATL7		REV. 0
	DRAWN: SHAHID ALI	25-JUN-12	FIRST ANGLE PROJECTION
	ENGINEER: Y NGUYEN	25-JUN-12	
PROJECT: SUBMITTALS DRAWINGS SHEET 2 OF 2	APPROVED: J CAMPBELL/C LARSEN	25-JUN-12	