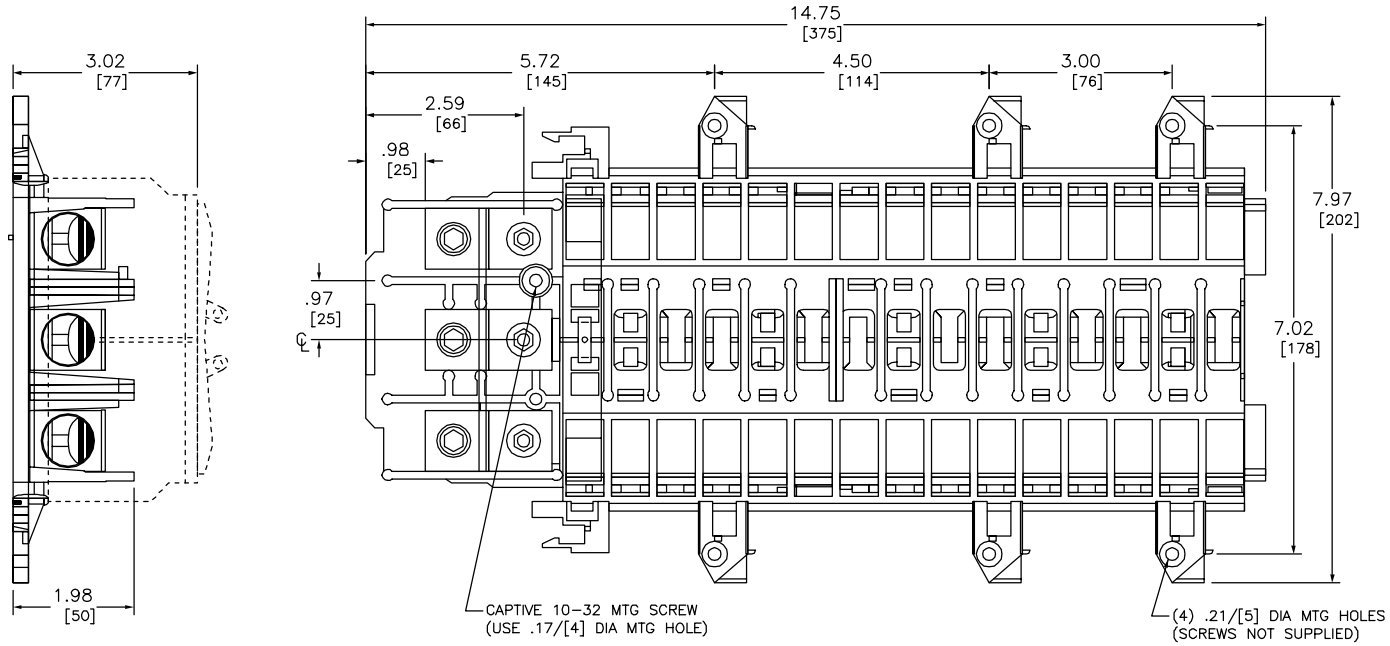

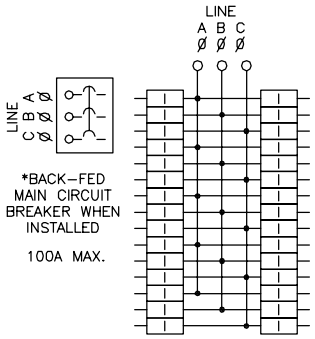

NOTES:
INCOMPLETE COMPONENT – THE FINAL ACCEPTANCE OF THIS COMPONENT IS DEPENDENT UPON ITS INSTALLATION AND USE IN COMPLETE EQUIPMENT SUBMITTED TO UNDERWRITERS LABORATORIES, INC. OR CANADIAN STANDARDS ASSOCIATION.
UL RECOGNIZED FILE: E6294; CSA PANELBOARD INTERIOR FILE: LL89066
THE SHORT CIRCUIT CURRENT RATING OF THIS COMPONENT IS 10,000 RMS. SYMMETRICAL AMPERES AT 240VAC MAX. OR EQUIVALENT TO THE LOWEST INTERRUPTING RATING OF ANY CIRCUIT BREAKER INSTALLED. ADDITIONAL OR REPLACEMENT CIRCUIT BREAKERS MUST BE EQUAL TO OR GREATER THAN THIS RATING.
SUITABLE FOR USE WITH 75° COPPER OR ALUMINUM MAIN CONDUCTORS. SEE BRANCH BREAKERS FOR BRANCH WIRE RATINGS.
USE ONLY SQUARE D TYPE QO, QOA AND QOC BRANCH CIRCUIT BREAKERS, COMPONENTS AND ACCESSORIES.
SEE MARKINGS ON INTERIOR FOR MAIN TERMINALS AND BRANCH NEUTRALS WIRE RANGE AND TORQUE DATA.
MAXIMUM CONTINUOUS LOADS ON BRANCH CIRCUIT NOT TO EXCEED 80% OF THE RATING OF THE CIRCUIT BREAKERS EMPLOYED IN OTHER THAN MOTOR CIRCUITS.
LES CHARGES CONTINUES MAXIMALES POUR LES DERIVATIONS NE DOIVENT PAS ETRE EUPERIEURES A 80 PERCENT DU COURANT NOMINAL DES DISJONCTEURES TUILISES POUR DES CIRCUITS AUTRES QUE DES CIRCUITS DE MOTEURS.
** FOR 240VAC 3PH–3W SYSTEM, ONLY BREAKERS RATED 240VAC ARE TO BE USED.
*** FOR 240/120VAC 3PH–4W (DELTA) SYSTEMS PHASES "A" AND "C" **MUST BE 120VAC TO NEUTRAL,** PHASE "B" MUST BE 208VAC TO NEUTRAL. BREAKER POLES CONNECTED TO PHASE "B" MUST BE RATED 240VAC. SINGLE POLE BREAKERS CAN ONLY BE CONNECTED TO PHA**SE "A" AND "C".**
* THE INSTALLATION OF A BACK–FED MAIN CIRCUIT BREAKER REQUIRES A RETENTION BRACKET. ORDER **AND INSTALL PK3MB.**

DUAL DIMENSIONS: INCHES / MILLIMETERS

CATALOG NUMBER	MAXIMUM SYSTEM VOLTAGE	MAINS AMPERE RATING	SPACES	MAXIMUM NUMBER OF SINGLE POLE CIRCUITS	MAIN TERMINAL SIZE AWG/KCMIL AL OR CU
QON330L200	240VAC	200	30	30	#4–250

OEM MOUNTING BASE
**240VAC 3PH–3W
***240/120VAC 3PH–4W
50–60 HERTZ

SQUARE D
Schneider Electric

DWG# NO. 1829

FEBRUARY 2005

40271–643–01