Product data sheet
Characteristics

ZB5FK1833
Head for illuminated selector switch, Harmony XB5, plastic, green handle, universal LED, 3 positions, right to center

Product availability: Non-Stock - Not normally stocked in distribution facility
Important message: A change in appearance may be noted on the product but does not affect its use in terms of function and safety. This makes it compatible with our Universal LED blocks

Price*: 51.30 USD

Main

Range of Product	Harmony XB5
Product or Component Type	Head for illuminated selector switch
Product Compatibility	Universal LED
Device short name	ZB5
Bezel material	Dark grey plastic
Mounting diameter	1.20 In (30.5 mm)
Head type	Built-in-flush
Sale per indivisible quantity	1
Shape of signaling unit head	Round
Type of operator	Right to centre spring return
Operator profile	Green standard handle
Operator position information	3 positions +/- 45°

Complementary

CAD overall width	1.46 In (37 mm)
CAD overall height	1.46 In (37 mm)
CAD overall depth	1.81 In (46 mm)
Net Weight	0.07 Lb(US) (0.03 kg)
Mechanical durability	500000 Cycles
Electrical composition code	M3 4 single front mounting integral LED M6 2 single front mounting integral LED and transformer M10 2 single front mounting integral LED MF1 2 single front mounting integral LED M4 4 single and double front mounting integral LED

The information provided in this documentation contains general descriptions and/or technical characteristics of the performance of the products contained herein.
This documentation is not intended as a substitute for and is not to be used for determining suitability or reliability of these products for specific user applications.
It is the duty of any such user or integrator to perform the appropriate and complete risk analysis, evaluation and testing of the products with respect to the relevant specific application or use thereof.
Neither Schneider Electric Industries SAS nor any of its affiliates or subsidiaries shall be responsible or liable for misuse of the information contained herein. *Prices are indicative

Environment

Protective treatment	TH
Ambient Air Temperature for Storage	-40…158 °F (-40…70 °C)
Ambient Air Temperature for Operation	-40…158 °F (-40…70 °C)
Overvoltage category	Class II IEC 60536
IP degree of protection	IP66 IEC 60529 IP67 IP69 IP69K
NEMA degree of protection	NEMA 13 NEMA 4X
Resistance to high pressure washer	1015.26 Psi (7000000 Pa) 131 °F (55 °C) 0.1 m
IK degree of protection	IK03 conforming to IEC 50102
Standards	EN/IEC 60947-5-1 EN/IEC 60947-1 CSA C22.2 No 14 JIS C8201-5-1 EN/IEC 60947-5-4 UL 508 EN/IEC 60947-5-5 JIS C8201-1
Product Certifications	BV[RETURN]LROS (Lloyds register of shipping)[RETURN]UL Listed[RETURN]D-NV[RETURN]CSA[RETURN]GL
Vibration resistance	5 gn 2…500 Hz)IEC 60068-2-6
Shock resistance	30 gn 18 ms) half sine wave acceleration IEC 60068-2-27 50 gn 11 ms) half sine wave acceleration IEC 60068-2-27

Ordering and shipping details

Category	US10CS222467
Discount Schedule	0CS2
GTIN	3606481339607
Returnability	No
Country of origin	FR

Packing Units

Unit Type of Package 1	PCE
Number of Units in Package 1	1
Package 1 Height	2.15 In (5.45 cm)
Package 1 Width	1.69 In (4.3 cm)
Package 1 Length	2.05 In (5.2 cm)
Package 1 Weight	0.78 Oz (22.0 g)

Offer Sustainability

Sustainable offer status	Green Premium product
California proposition 65	WARNING: This product can expose you to chemicals including: Di-isodecyl phthalate (DIDP), which is known to the State of California to cause birth defects or other reproductive harm. For more information go to www.P65Warnings.ca.gov
REACh Regulation	REACh Declaration
REACh free of SVHC	Yes
EU RoHS Directive	Pro-active compliance (Product out of EU RoHS legal scope) EU RoHS Declaration
Toxic heavy metal free	Yes
Mercury free	Yes
China RoHS Regulation	China RoHS Declaration
RoHS exemption information	Yes

Environmental Disclosure	Product Environmental Profile
Circularity Profile	End Of Life Information

ZB5FK1833

Dimensions

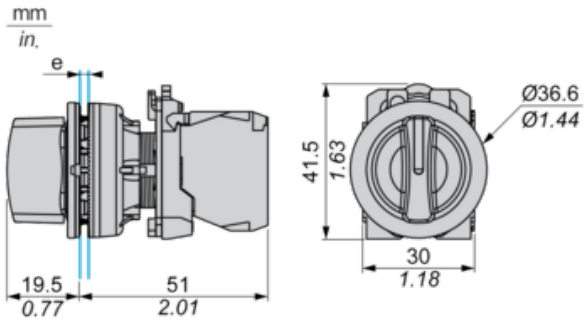

e: Clamping thickness: 1 to 6 mm / 0.04 to 0.24 in.

Panel Cut-out for Pushbuttons, Switches and Pilot Lights (Finished Holes, Ready for Installation)

Connection by Screw Clamp Terminals or Plug-in Connectors

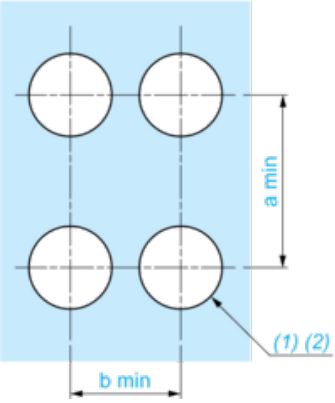

(1) Diameter on finished panel or support

(2) Ø30.75 mm recommended (Ø30.5 $_{0}^{+0.5}$) / Ø1.21 in. recommended (Ø1.20 in. $_{0}^{+0.0196}$)

Connections	a in mm	a in in.	b in mm	b in in.
By screw clamp terminals or plug-in connector	40	1.57	40	1.57
By Faston connectors	45	1.77	40	1.57

Electrical Composition Corresponding to Code M3

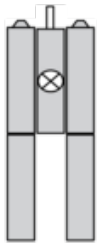

Electrical Composition Corresponding to Code M4

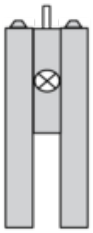

Electrical Composition Corresponding to Codes M6 and P2

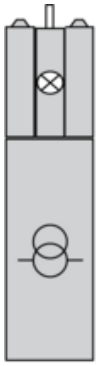

Electrical Composition Corresponding to Codes M5, M10, MF1, MR1 and MF2

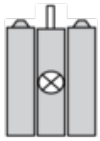

Legend

Single contact

Double contact

Light block

Possible location

Sequence of Contacts Fitted to 2-position Selector Switch Body

Position 315°

Push	Position	Top			
Bottom					
Location		Left	Right		
State		0	0		
Contacts	N/O		open	open	
N/C		closed	closed		

Position 45°

Push	Position	Top			
Bottom					
Location		Left	Right		
State		1	1		
Contacts	N/O		closed	closed	
N/C		open	open		

Product Life Status : Commercialised