Product data sheet
Characteristics

XCNT2739G11
limit switch XCNT - thermoplastic roller lever Ø50 mm - 2NC - slow - Pg11

Commercial status
End of Commercialisation : JAN 19, 2021

⚠ End of Commercialisation

Main

Range of product	Telemecanique Limit switches XC Standard
Series name	Standard format
Product or component type	Limit switch
Device short name	XCNT
Sensor design	Compact
Body type	Fixed
Head type	Rotary head
Material	Plastic
Body material	Plastic
Head material	Plastic
Fixing mode	By the body
Movement of operating head	Rotary
Type of operator	Spring return roller lever thermoplastic roller diameter 50 mm
Type of approach	Lateral approach, 2 directions
Cable entry	2 entries tapped for Pg 11 cable gland
Number of poles	2
Contacts type and composition	2 NC
Contact operation	Slow-break, simultaneous

Complementary

Switch actuation	By 30° cam
Electrical connection	Screw-clamp open terminals, clamping capacity: 1 x 0.34...2 x 1.5 mm²
Contacts insulation form	Zb
Positive opening	With
Positive opening minimum torque	0.15 N.M
Minimum torque for tripping	0.1 N.M
Maximum actuation speed	1.5 M/S
Contact code designation	A300, AC-15 (Ue = 240 V), Ie = 3 A, Ithe = 10 A conforming- to EN/IEC 60947-5-1 appendix A R300, DC-13 (Ue = 250 V), Ie = 0.1 A conforming to EN/IEC 60947-5-1 appendix A
[Ui] rated insulation voltage	300 V conforming to UL 508 500 V (pollution degree 3) conforming to IEC 60947-1 300 V conforming to CSA C22.2 No 14
[Uimp] rated impulse withstand voltage	6 KV conforming to IEC 60664 6 KV conforming to IEC 60947-1
Short-circuit protection	10 A cartridge fuse, type gG

The information provided in this documentation contains general descriptions and/or technical characteristics of the performance of the products contained herein.
This documentation is not intended as a substitute for and is not to be used for determining suitability or reliability of these products for specific user applications.
It is the duty of any such user or integrator to perform the appropriate and complete risk analysis, evaluation and testing of the products with respect to the relevant specific application or use thereof.
Neither Schneider Electric Industries SAS nor any of its affiliates or subsidiaries shall be responsible or liable for misuse of the information contained herein.

Mechanical durability	10000000 Cycles
Width	58.8 Mm
Height	120.1 Mm

Environment

Shock resistance	15 gn for 11 ms conforming to IEC 60068-2-27
Vibration resistance	15 gn (f= 10…500 Hz) conforming to IEC 60068-2-6
IP degree of protection	IP65 conforming to IEC 60529
IK degree of protection	IK04 conforming to EN 50102
Electrical shock protection class	Class II conforming to IEC 61140 Class II conforming to NF C 20-030
Ambient air temperature for operation	-25…70 °C
Ambient air temperature for storage	-40…70 °C
Protective treatment	TC
Product certifications	CCC[RETURN]UL[RETURN]CSA
Standards	EN/IEC 60947-5-1 CSA C22.2 No 14 UL 508 EN/IEC 60204-1

Packing Units

Unit Type of Package 1	PCE
Number of Units in Package 1	1

Contractual warranty

Warranty	18 months

XCNT2739G11

Dimensions

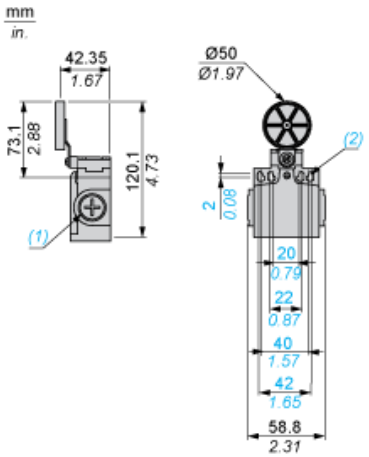

(1) 2 tapped entry for Pg 11 cable gland
(2) Ø: 4 elongated holes Ø 4.3 x 6.3

Mounting with Cable Entry

Position of Cable Gland

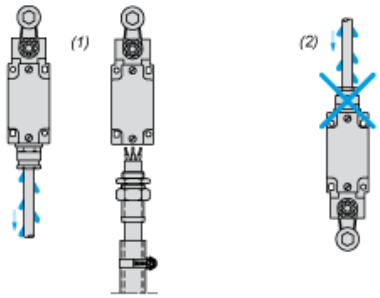

(1) Recommended
(2) To be avoided

Mounting with Rotary Heads and Levers

Type of Cam

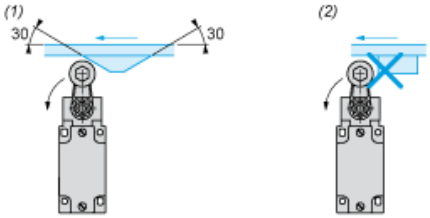

(1) Recommended
(2) To be avoided

XCNT2739G11

Wiring Diagram

2-pole NC + NC Simultaneous, Slow Break

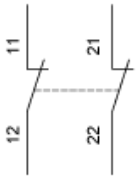

Characteristics of Actuation

Switch Actuation by 30° Cam

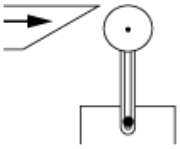

Functionnal Diagram

(P) Positive opening point
(1) NC contact with positive opening operation
(2) Closed
(3) Open

Product Life Status :	End of commercialisation