Product data sheet
Characteristics

XCMD3910L2
Limit switch, Limit switches XC Standard, XCMD, metal end plunger, 2NC+1 NO, snap, 2 m

Green Premium

Product availability: Non-Stock - Not normally stocked in distribution facility
Important message: We have updated the process to order Telemecanique Sensors products. For more information, please contact your Telemecanique Sensors representative at (US.salesorders@tesensors.com).You can find all product information on the Telemecanique Sensors website: https://tesensors.com/us/en

Commercial status
This Product is Obsolete : SEP 01, 2023

⚠ This Product is Obsolete

Main

Range of Product	Telemecanique Limit switches XC Standard
Series name	Standard format
Product or Component Type	Limit switch
Device short name	XCMD
Sensor design	Miniature
Body type	Fixed
Head type	Plunger head
Material	Metal
Body material	Zamak
Head material	Zamak
Fixing Mode	By the body
Movement of operating head	Linear
Type of operator	Spring return plunger metal
Type of approach	Vertical approach, 1 direction
Number of poles	3
Contacts type and composition	2 NC + 1 NO
Contact operation	Snap action

Complementary

Switch actuation	On end
Electrical connection	Removable cable connector
Cable length	6.56 Ft (2 m)
Cable composition	7 x 0.5 mm²
Wire insulation material	PvR
Contacts insulation form	Zb

The information provided in this documentation contains general descriptions and/or technical characteristics of the performance of the products contained herein.
This documentation is not intended as a substitute for and is not to be used for determining suitability or reliability of these products for specific user applications.
It is the duty of any such user or integrator to perform the appropriate and complete risk analysis, evaluation and testing of the products with respect to the relevant specific application or use thereof.
Neither Schneider Electric Industries SAS nor any of its affiliates or subsidiaries shall be responsible or liable for misuse of the information contained herein.

Positive opening	With
Positive opening minimum force	35 N
Minimum force for tripping	8.5 N
Minimum actuation speed	0.01 M/Min
Maximum actuation speed	1.64 Ft/S (0.5 m/s)
Contact code designation	R300, DC-13 (Ue = 250 V), Ie = 0.1 A EN/IEC 60947-5-1 appendix A C300, AC-15 (Ue = 240 V), Ie = 0.75 A EN/IEC 60947-5-1 appendix A
[Ui] rated insulation voltage	300 V 3)UL 508 400 V 3)IEC 60947-5-1 300 V 3)CSA C22.2 No 14
Maximum resistance across terminals	25 MOhm IEC 60255-7 category 3
[Uimp] rated impulse withstand voltage	4 KV IEC 60664 4 KV IEC 60947-1
Short-circuit protection	6 A cartridge fuse gG
Electrical durability	5000000 Cycles, DC-13, 120 V, 1 W 60 cyc/mn 0.5 IEC 60947-5-1 appendix C 5000000 Cycles, DC-13, 24 V, 3 W 60 cyc/mn 0.5 IEC 60947-5-1 appendix C 5000000 Cycles, DC-13, 48 V, 2 W 60 cyc/mn 0.5 IEC 60947-5-1 appendix C
Mechanical durability	10000000 Cycles
Width	1.18 In (30 mm)
Height	1.97 In (50 mm)
Depth	0.63 In (16 mm)
Net Weight	0.41 Lb(US) (0.185 kg)

Environment

Shock resistance	25 gn 18 ms IEC 60068-2-27
Vibration resistance	5 gn 10…500 Hz)IEC 60068-2-6
IP degree of protection	IP66 conforming to IEC 60529 IP67 conforming to IEC 60529 IP68 conforming to IEC 60529
IK degree of protection	IK06 conforming to EN 62262
Overvoltage category	Class I IEC 61140 Class I NF C 20-030
Ambient Air Temperature for Operation	-13…158 °F (-25…70 °C)
Ambient Air Temperature for Storage	-40…158 °F (-40…70 °C)
Protective treatment	TC
Product Certifications	UL[RETURN]CCC[RETURN]CSA
Standards	CSA C22.2 No 14 EN/IEC 60204-1 EN/IEC 60947-5-1 UL 508

Ordering and shipping details

Category	US1000T22413
Discount Schedule	000T
GTIN	3389119034722
Returnability	No
Country of origin	ID

Packing Units

Unit Type of Package 1	PCE
Number of Units in Package 1	1
Package 1 Height	0.79 In (2 cm)
Package 1 Width	4.72 In (12 cm)
Package 1 Length	4.72 In (12 cm)
Package 1 Weight	7.34 Oz (208 g)

Unit Type of Package 2	S03
Number of Units in Package 2	1
Package 2 Height	11.81 In (30 cm)
Package 2 Width	11.81 In (30 cm)
Package 2 Length	15.75 In (40 cm)
Package 2 Weight	32.49 Oz (921 g)

Offer Sustainability

Sustainable offer status	Green Premium product
California proposition 65	WARNING: This product can expose you to chemicals including: Diisononyl phthalate (DINP), which is known to the State of California to cause cancer, and Di-isodecyl phthalate (DIDP), which is known to the State of California to cause birth defects or other reproductive harm. For more information go to www.P65Warnings.ca.gov
REACh Regulation	REACh Declaration
EU RoHS Directive	Pro-active compliance (Product out of EU RoHS legal scope)
Mercury free	Yes
RoHS exemption information	Yes

Contractual warranty

Warranty	18 months

XCMD3910L2

Dimensions

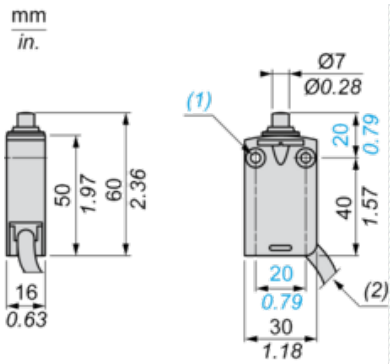

(1) 2 fixing holes Ø 4.2 mm, counterbored Ø 8 mm by 4 mm deep.

(2) External diameter of cable 7.5 mm.

Mounting

Sweep of Connecting Cable

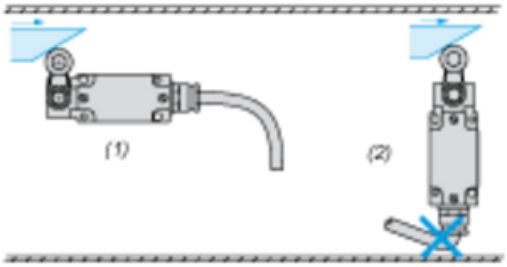

(1) Recommended

(2) To be avoided

Setting-up

Plunger or Multi-directional Heads

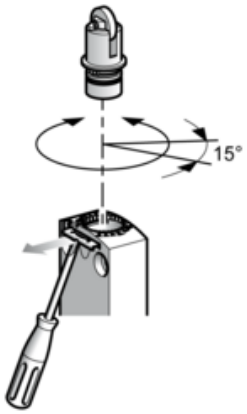

XCMD3910L2

Wiring Diagram

3-pole NC + NC + NO Snap Action

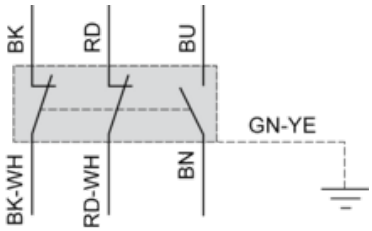

(BK) Black
(BK-WH) Black White
(RD) Red
(RD-WH) Red White
(BU) Blue
(BN) Brown
(GN-YE) Green Yellow

Characteristics of Actuation

Switch Actuation on End

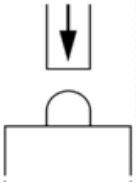

Functional Diagram

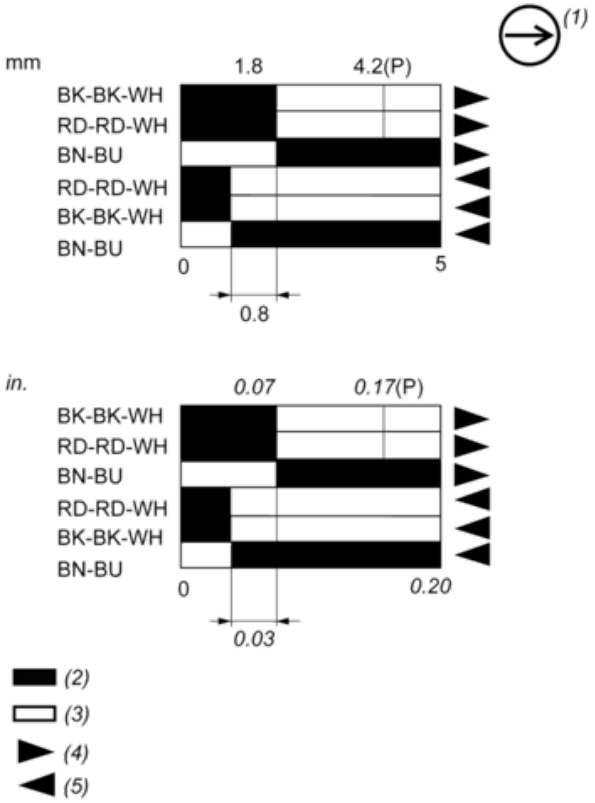

(P) Positive opening point
(1) NC contact with positive opening operation
(2) Closed
(3) Open
(4) Tripping
(5) Resetting
(BK) Black
(BK-WH) Black White
(RD) Red
(RD-WH) Red White
(BN) Brown

Product Life Status :	End of commercialisation