Product data sheet
Characteristics

PAS43E0350
portal axis PAS E - profile size 80x80mm - toothed belt - ball - stroke 350mm

Commercial status
This Product is Obsolete : SEP 19, 2022

⚠ This Product is Obsolete

Main

Range of Product	Lexium PAS E
Product or Component Type	Portal axis
Product Specific Application	For 1 direction
Load position	On carriage
Drive type	Toothed belt
Guide type	Ball

Complementary

Operating position	Horizontal
Permanent permissible load	55.1 Lb(US) (25 kg)
Distance per revolution	8.07 In (205 mm)
Maximum operating force	1100 N for Fx 4410 N for Fy 4410 N for Fz
Maximum actuation speed	6.6 Ft/S (2 m/s)
Maximum acceleration	49.2 Ft/S² (15 m/s²)
Maximum drive torque	35.4 Lbf.In (4 N.m)
Maximum torque value	<44.3 Lbf.In (5 N.m) for Mx <97.4 Lbf.In (11 N.m) for My <150.5 Lbf.In (17 N.m) for Mz
Operating travel	13.8 In (350 mm)
Product Weight	39.7 Lb(US) (18 kg) at 0 stroke with carriage and motor 4.6 Lb(US) (2.1 kg) of carriage 61.07 Lb(US) (27.7 kg) total
Repeat accuracy	+/- 0.05 mm
Outer dimension	80 x 80 mm
Mechanical service life	30000 km
Associated module	PLE80 planetary gearbox 5:1 supplied) BMH1002P06A2A servo motor supplied) LXM32.D18N4 servo drive not supplied)

Ordering and shipping details

GTIN	3606485237091

The information provided in this documentation contains general descriptions and/or technical characteristics of the performance of the products contained herein.
This documentation is not intended as a substitute for and is not to be used for determining suitability or reliability of these products for specific user applications.
It is the duty of any such user or integrator to perform the appropriate and complete risk analysis, evaluation and testing of the products with respect to the relevant specific application or use thereof.
Neither Schneider Electric Industries SAS nor any of its affiliates or subsidiaries shall be responsible or liable for misuse of the information contained herein.

Packing Units

Unit Type of Package 1	PCE
Number of Units in Package 1	1
Package 1 Height	10.4 In (26.5 cm)
Package 1 Width	19.2 In (48.8 cm)
Package 1 Length	38.7 In (98.4 cm)
Package 1 Weight	61.070 Lb(US) (27.701 kg)

Offer Sustainability

California proposition 65	"WARNING: This product can expose you to chemicals including: Lead and lead compounds, which is known to the State of California to cause cancer and birth defects or other reproductive harm. For more information go to www.P65Warnings.ca.gov"
REACh Regulation	REACh Declaration
REACh free of SVHC	Yes
EU RoHS Directive	Pro-active compliance (Product out of EU RoHS legal scope)
Mercury free	Yes
China RoHS Regulation	China RoHS Declaration
RoHS exemption information	Yes
WEEE	The product must be disposed on European Union markets following specific waste collection and never end up in rubbish bins.
PVC free	Yes

Contractual warranty

Warranty	18 months

PAS43E0350

Size Characteristics

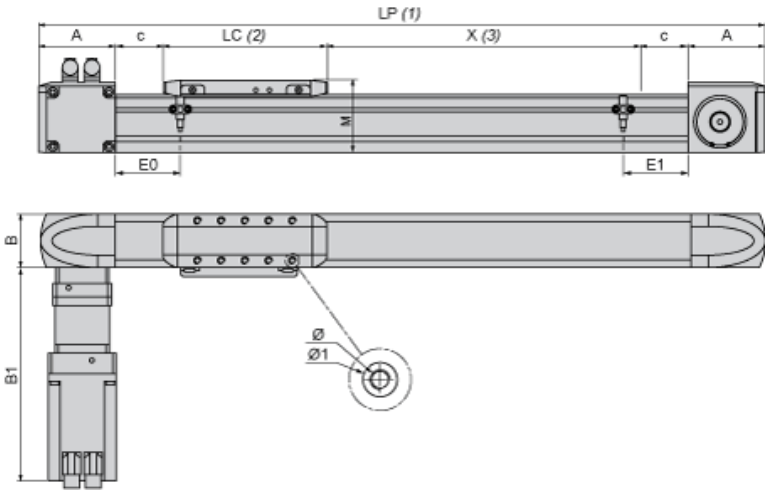

(1) LP : total length of axis
(2) LC : length of carriage
(3) X : Stroke, refer to product characteristics.

A	mm	110
in.	4.33	
B	mm	80
in.	3.15	
B1	mm	322
in.	12.68	
c	mm	25
in.	0.98	
E0	mm	62
in.	2.44	
E1	mm	62
in.	2.44	
LC	mm	244
in.	9.61	
LP	mm	= 270 + LC + X
in.	= 10.63 + LC + X	
M	mm	100
in.	3.94	
∅	mm	M6 X 14
in.	M6 X 0.55	
∅1	mm	10^{H7} X 2.1
in.	10^{H7} X 0.08	

Servo Motor Mounting

Standard servo motor mounting

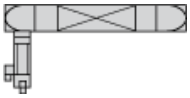

Servo motor mounted on the left

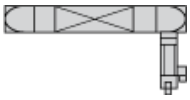

PAS43E0350

Axis Positioning Time as a Function of the Stroke

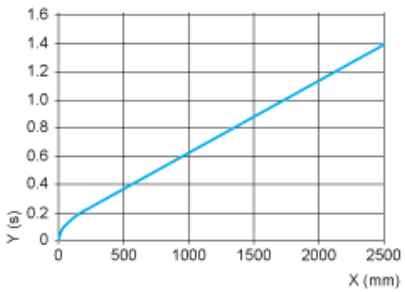

X : Stroke
Y : Positioning time

Forces and Torques Exerted on the Lexium PAS E Portal Axis

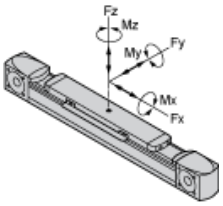

Product Life Status : End of commerc. - Block

PAS43E0350 is replaced by the following product range:

2919

Portal axes with movable carriage and fixed axis.

Substitution date: |