Product data sheet
Characteristics

LC1F330FE7
TeSys F contactor - 3P (3 NO) - AC-3 - <= 440 V 330 A - coil 115 V AC

Main

Range	TeSys
Range of product	TeSys F
Product or component type	Contactor
Device short name	LC1F
Contactor application	Resistive load Motor control
Utilisation category	AC-4 AC-1 AC-3
Poles description	3P
[Ue] rated operational voltage	<= 1000 V AC 50/60 Hz <= 460 V DC
[Uc] control circuit voltage	115 V AC 40...400 Hz
[Ie] rated operational current	400 A (at <40 °C) at <= 440 V AC AC-1 330 A (at <55 °C) at <= 440 V AC AC-3

Complementary

[Uimp] rated impulse withstand voltage	8 KV
[Ith] conventional free air thermal current	400 A (at 40 °C)
Rated breaking capacity	2640 A conforming to IEC 60947-4-1
[Icw] rated short-time withstand current	2650 A 40 °C - 10 s 1800 A 40 °C - 30 s 1300 A 40 °C - 1 min 900 A 40 °C - 3 min 750 A 40 °C - 10 min
Associated fuse rating	400 A aM at <= 440 V 500 A gG at <= 440 V
Average impedance	0.28 MOhm - Ith 400 A 50 Hz
[Ui] rated insulation voltage	1000 V conforming to IEC 60947-4-1 1500 V conforming to VDE 0110 group C
Power dissipation per pole	44 W AC-1 31 W AC-3
Overvoltage category	III
Pole contact composition	3 NO

The information provided in this documentation contains general descriptions and/or technical characteristics of the performance of the products contained herein.
This documentation is not intended as a substitute for and is not to be used for determining suitability or reliability of these products for specific user applications.
It is the duty of any such user or integrator to perform the appropriate and complete risk analysis, evaluation and testing of the products with respect to the relevant specific application or use thereof.
Neither Schneider Electric Industries SAS nor any of its affiliates or subsidiaries shall be responsible or liable for misuse of the information contained herein.

Motor power kW	160 KW at 380...400 V AC 50/60 Hz (AC-3) 180 KW at 415 V AC 50/60 Hz (AC-3) 200 KW at 440 V AC 50/60 Hz (AC-3) 200 KW at 500 V AC 50/60 Hz (AC-3) 220 KW at 660...690 V AC 50/60 Hz (AC-3) 160 KW at 1000 V AC 50/60 Hz (AC-3) 100 KW at 220...230 V AC 50/60 Hz (AC-3) 59 KW at 400 V AC 50/60 Hz (AC-4)
Control circuit voltage limits	Operational: 0.85...1.1 Uc 40...400 Hz (at 55 °C) Drop-out: 0.35...0.55 Uc 40...400 Hz (at 55 °C)
Mechanical durability	10 Mcycles
Inrush power in VA	650 VA, 40...400 Hz cos phi 0.9 (at 20 °C)
Hold-in power consumption in VA	10 VA, 40...400 Hz cos phi 0.9 (at 20 °C)
Maximum operating rate	2400 Cyc/H 55 °C
Operating time	40...65 ms closing 100...170 ms opening
Connections - terminals	Control circuit: screw clamp terminals 1 cable(s) 1…4 mm²flexible without cable end Control circuit: screw clamp terminals 2 cable(s) 1…4 mm²flexible without cable end Control circuit: screw clamp terminals 1 cable(s) 1…4 mm²flexible with cable end Control circuit: screw clamp terminals 2 cable(s) 1…2.5 mm²flexible with cable end Control circuit: screw clamp terminals 1 cable(s) 1…4 mm²solid without cable end Control circuit: screw clamp terminals 2 cable(s) 1…4 mm²solid without cable end Power circuit: lugs-ring terminals 1 cable(s) 240 mm² Power circuit: bar 2 cable(s) - busbar cross section: 30 x 5 mm Power circuit: bolted connection
Tightening torque	Control circuit: 1.2 N.m Power circuit: 35 N.m
Mounting support	Plate
Heat dissipation	8 W
Power range	55…100 KW at 200…240 V 3 phases 110…220 KW at 480…500 V 3 phases 110…220 KW at 380…440 V 3 phases
Motor starter type	Direct on-line contactor
Contactor coil voltage	115 V AC standard
Standards	EN 60947-4-1 JIS C8201-4-1 IEC 60947-1 IEC 60947-4-1 EN 60947-1
Product certifications	CB[RETURN]ABS[RETURN]UL[RETURN]LROS (Lloyds register of shipping)[RETURN]CSA[RETURN]DNV[RETURN]RMRoS[RETURN]RINA[RETURN]BV[RETURN]UKCA
Compatibility code	LC1F
Control circuit type	AC at 40...400 Hz

Environment

IP degree of protection	IP20 front face with shrouds conforming to IEC 60529 IP20 front face with shrouds conforming to VDE 0106
Protective treatment	TH
Ambient air temperature for operation	-5…55 °C
Ambient air temperature for storage	-60…80 °C
Permissible ambient air temperature around the device	-40…70 °C
Height	206 Mm
Width	213 Mm
Depth	219 Mm
Operating altitude	3000 m without derating
Net weight	8.6 Kg

Packing Units

Unit Type of Package 1	PCE
Number of Units in Package 1	1
Package 1 Height	24.5 Cm
Package 1 Width	23.5 Cm
Package 1 Length	29.0 Cm
Package 1 Weight	9.363 Kg
Unit Type of Package 2	P06
Number of Units in Package 2	10
Package 2 Height	77.0 Cm
Package 2 Width	80.0 Cm
Package 2 Length	60.0 Cm
Package 2 Weight	102.13 Kg

Offer Sustainability

Sustainable offer status	Green Premium product
REACh Regulation	REACh Declaration
EU RoHS Directive	Compliant with Exemptions
Mercury free	Yes
China RoHS Regulation	China RoHS Declaration
RoHS exemption information	Yes
Environmental Disclosure	Product Environmental Profile
Circularity Profile	End Of Life Information
WEEE	The product must be disposed on European Union markets following specific waste collection and never end up in rubbish bins

Contractual warranty

Warranty	18 months

LC1F330FE7

Dimensions and Drawings

LC1 F115 to F330

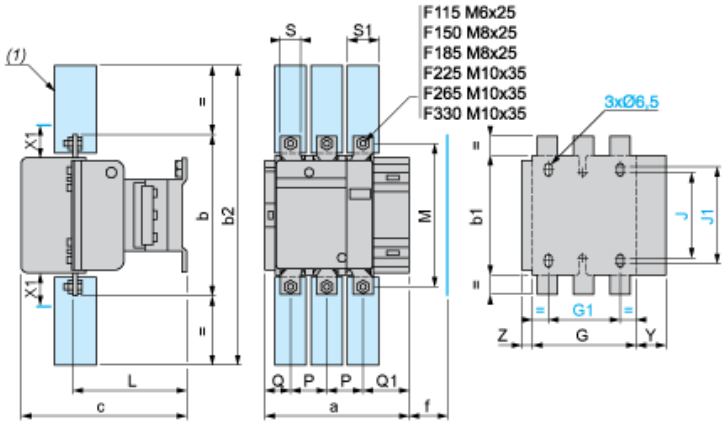

(1) Power terminal protection shroud

X1 (mm) = Minimum electrical clearance according to operating voltage and breaking capacity.

LC1	200...500 V	600...1000 V
F115, F150	10	15
F185	10	15
F225, F265	10	15
F330	10	15

LC1		a	b	b1	b2	c	f	G	G1	J	J1	L	M	P	Q	Q1	S	S1	Y	Z
F115	3P	163.5	162	137	265	171	131	106	80	106	120	107	147	37	29.5	60	20	26	44	13.5
4P	200.5	162	137	265	171	131	143	80	106	120	107	147	37	29.5	60	20	26	44	13.5	
F150	3P	163.5	170	137	301	171	131	106	80	106	120	107	150	40	26	57.5	20	34	44	13.5
4P	200.5	170	137	301	171	131	143	80	106	120	107	150	40	26	55.5	20	34	44	13.5	
F185	3P	168.5	174	137	305	181	130	111	80	106	120	113.5	154	40	29	59.5	20	34	44	13.5
4P	208.5	174	137	305	181	130	151	80	106	120	113.5	154	40	29	59.5	20	34	44	13.5	
F225	3P	168.5	197	137	364	181	130	111	80	106	120	113.5	172	48	21	51.5	25	44.5	44	13.5
4P	208.5	197	137	364	181	130	151	80	106	120	113.5	172	48	17	47.5	25	44.5	44	13.5	
F265	3P	201.5	203	145	375	213	147	142	96	106	120	141	178	48	39	66.5	25	44.5	38	21.5
4P	244.5	203	145	375	213	147	190	96	106	120	141	178	48	34	66.5	25	44.5	38	16.5	
F330	3P	213	206	145	375	219	147	154.5	96	106	120	145	181	48	43	74	25	44.5	38	20.5
4P	261	206	145	375	219	147	202.5	96	106	120	145	181	48	43	74	25	44.5	38	20.5	

TeSys F reversing contactors and changeover contactor pairs, vertically mounted

NOTE: For customer assembly, with mechanical interlock (MI) LA9 F, fixing recommended on AM1 EC uprights (please consult your Regional Sales Office). 2 x LC1 identical or different ratings (LC1 F115 to F630 and F800).

Assembly A

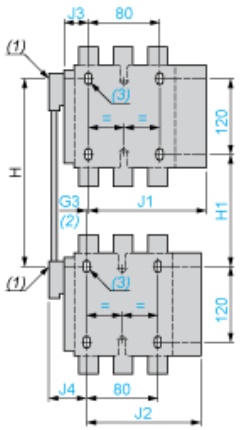

(1) Mechanical interlock shaft.
(2) For assembly of contactors of different ratings only.
(3) 4 x Ø6.5 for LC1 F115 to F225.

Assembly A[7] - Mechanical interlock reference

	G3 3P	G3 4P	H min.	H max.	H1 min.	H1 max.	J1 3P	J1 4P
LA9 FF4F	0	0	200	310	80	190	137	155.5
LA9 FG4F	3	4	210	300	90	180	139.5	159.5
LA9 FG4G	0	0	220	310	100	190	139.5	159.5

	J2 3P	J2 4P	J3 3P	J3 4P	J4 3P	J4 4P
LA9 FF4F	137	155.5	48.5	67	48.5	67
LA9 FG4F	137	155.5	53	73	54	69
LA9 FG4G	139.5	159.5	53	73	53	73

Assembly B

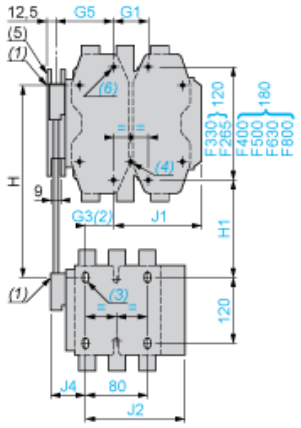

(4) 4 x Ø6.5 for LC1 F265.
(5) Mechanical interlock guide bracket.

Assembly B[7] - Mechanical interlock reference

	G1 3P	G1 4P	G3 3P	G3 4P	G5 3P	G5 4P	H min.	H max.
LA9 FH4F	96	96	21	27	60	83	240	380
LA9 FJ4F	80	80	45	26	83	83	250	380
LA9 FK4F	80	140	45	26	83	83	270	380
LA9 FL4F	180	240	35	17	74	74	310	380
LA9 FH4G	96	96	19	23	60	83	250	380
LA9 FJ4G	80	80	42	22	83	83	250	380
LA9 FK4G	80	140	42	22	83	83	270	380
LA9 FL4G	180	240	33	13	74	74	310	380

	H1 min.	H1 max.	J1 3P	J1 4P	J2 3P	J2 4P	J4 3P	J4 4P
LA9 FH4F	110	250	157.5	181.5	137	155.5	48.5	67
LA9 FJ4F	80	210	144.5	192.5	137	155.5	48.5	67

	H1 min.	H1 max.	J1 3P	J1 4P	J2 3P	J2 4P	J4 3P	J4 4P
LA9 FK4F	100	210	164.5	219.5	137	155.5	48.5	67
LA9 FL4F	140	210	248.5	328.5	137	155.5	48.5	67
LA9 FH4G	120	250	157.5	181.5	139.5	159.5	53	73
LA9 FJ4G	90	220	144.5	192.5	139.5	159.5	53	73
LA9 FK4G	110	220	164.5	219.5	139.5	159.5	53	73
LA9 FL4G	150	220	248.5	328.5	139.5	159.5	53	73

Assembly C

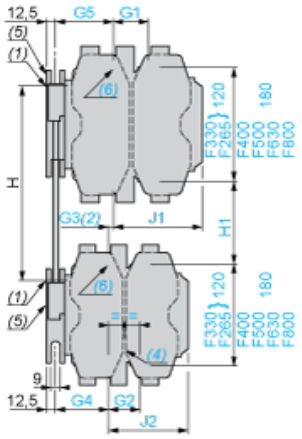

(6) 4 x Ø8.5 for LC1 F400, F500 or 4 x Ø10.5 for LC1 F630 and F800.

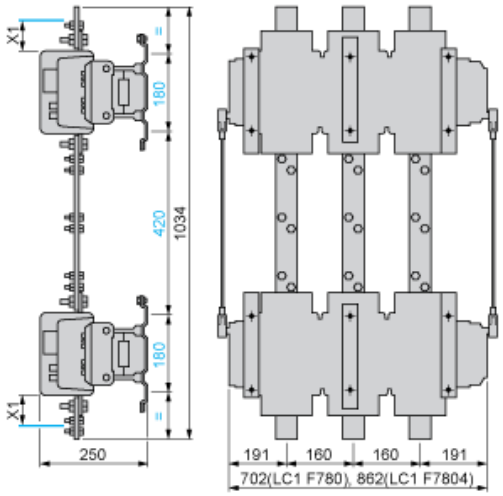

(7) Only 3P for F800.
(8) In this case, G4 is greater than G5.

Assembly C(7)

	G1 3P	G1 4P	G2 3P	G2 4P	G3 3P	G3 4P	G4 3P	G4 4P	G5 3P	G5 4P
LA9 FH4H	96	96	96	96	0	0	60	83	60	83
LA9 FJ4H	80	80	96	96	23	0	60	83	83	83
LA9 FK4H	80	140	96	96	23	0	60	83	83	83
LA9 FL4H	180	240	96	96	14	9(8)	60	83	74	74
LA9 FJ4J	80	80	80	80	0	0	83	83	83	83
LA9 FK4J	80	140	80	80	0	0	83	83	83	83
LA9 FL4J	180	240	80	80	9(8)	9(8)	83	83	74	74
LA9 FK4K	80	140	80	140	0	0	83	83	83	83
LA9 FL4K	180	240	80	140	9(8)	9(8)	83	83	74	74
LA9 FL4L	180	240	180	240	0	0	74	74	74	74

	H min.	H max.	H1 min.	H1 max.	J1 3P	J1 4P	J2 3P	J2 4P
LA9 FH4H	250	380	130	260	157.5	181.5	157.5	181.5

	H min.	H max.	H1 min.	H1 max.	J1 3P	J1 4P	J2 3P	J2 4P
LA9 FJ4H	260	380	110	230	144.5	192.5	157.5	181.5
LA9 FK4H	280	380	130	230	164.5	219.5	157.5	181.5
LA9 FL4H	330	380	170	220	248.5	328.5	157.5	181.5
LA9 FJ4J	260	380	60	200	144.5	192.5	144.5	192.5
LA9 FK4J	280	380	100	200	164.5	219.5	144.5	192.5
LA9 FL4J	325	380	140	195	248.5	329.5	144.5	192.5
LA9 FK4K	300	380	120	200	164.5	329.5	164.5	219.5
LA9 FL4K	345	380	160	195	248.5	328.5	164.5	219.5
LA9 FL4L	380	380	200	200	248.5	328.5	248.5	328.5

Connections and Schema

2, 3, and 4-pole Contactors

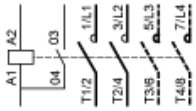

LC1 F115 to F630, F1250(coil LX1 F ∿)

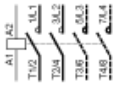

LC1 F115 to F630 , F1250 (coil LX4 F ⎓)

LC1 F115 to F265 (coil LX9 F ∿)

LC1 F800 (coil LX8 F ∿ / ⎓)

LC1F330FE7

Product Life Status :	End of commerc. announced

LC1F330FE7 may be replaced by any of the following products:

LC1G330EHEN

High power contactor, TeSys Giga, 3 pole (3NO), AC-3 <=440V 330A, standard version, 48…130V wide band AC/DC co

Qty 1

Substitution date: |

LC1G330EHEA

High power contactor, TeSys Giga, 3 pole (3NO), AC-3 <=440V 330A, advanced version, 48…130V wide band AC/DC c

Qty 1

Substitution date: |

LC1G330KUEN

High power contactor, TeSys Giga, 3 pole (3NO), AC-3 <=440V 330A, standard version, 100…250V wide band AC/DC c

Qty 1

Substitution date: |