Instruction

MI 019-125
May 2015

I/A Series® Mass Flowtubes
Model CFS25

Installation, Startup, Troubleshooting, and Maintenance

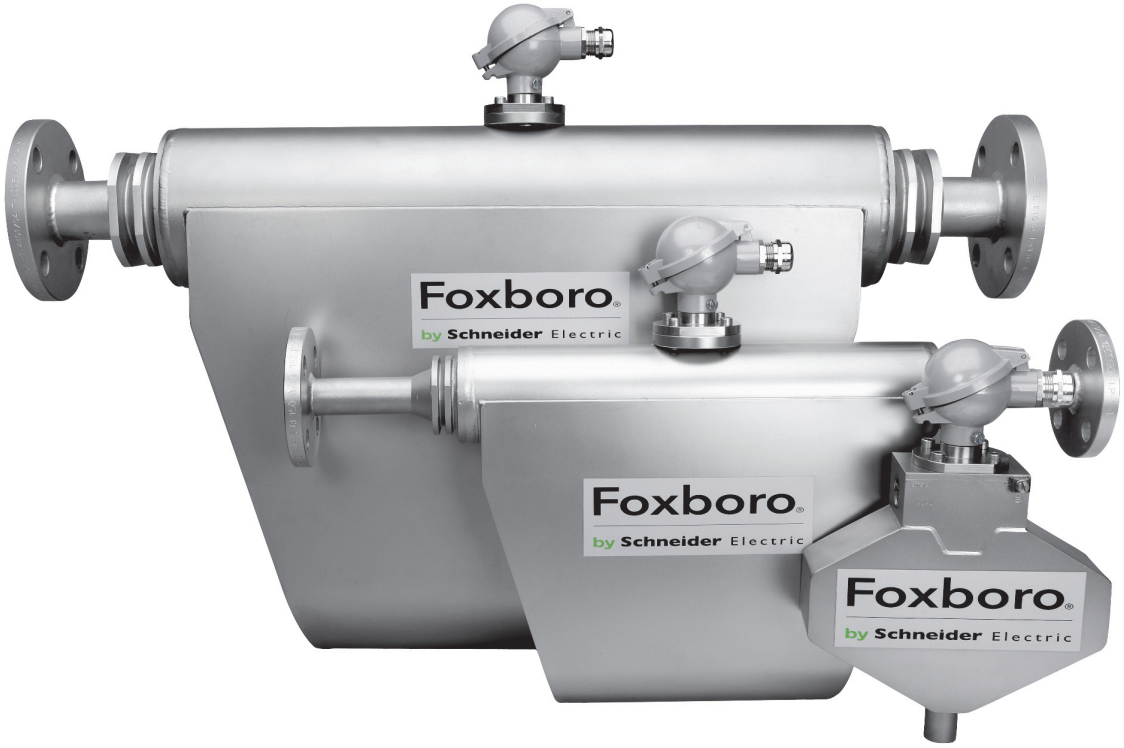

Foxboro®
by Schneider Electric

Contents

Figures

Tables

1. Introduction

General Description

The Model CFS25 Flowtube is a mass flowtube that channels fluid through two loops for flow measurement in general process applications.

- A dual-path flowtube splits the flow into two separate, *parallel*-connected loops.
- A single-path flowtube maintains the flow through two *serially*-connected tube loops positioned side-by-side. Fluid passes first through one loop and then through the second loop. This design is suitable for shear-sensitive fluids and applications that require positive cleaning.

Two flowtube loops inside the flow meter vibrate in opposite directions at their resonant frequency. Any mass flow passing through the tubes delays the vibration at the incoming side and accelerates the vibration at the outgoing side. This causes a brief delay between both ends of the tube. The measurement of this delay is used to calculate the mass flow through the tubes.

By measuring the resonant frequency of the tubes, the mass of the medium and - given a constant volume inside the tubes - the specific gravity of the medium can be calculated.

As both effects are temperature-dependent, the temperature is measured via a precise sensor for correcting the temperature effects of flow and density measurement.

As a consequence, a Coriolis mass flow meter directly measures the mass flow, density, and temperature of the medium. The volume flow can be calculated from the mass flow and density.

Figure 1. Flexions of Tubes with and without Flow

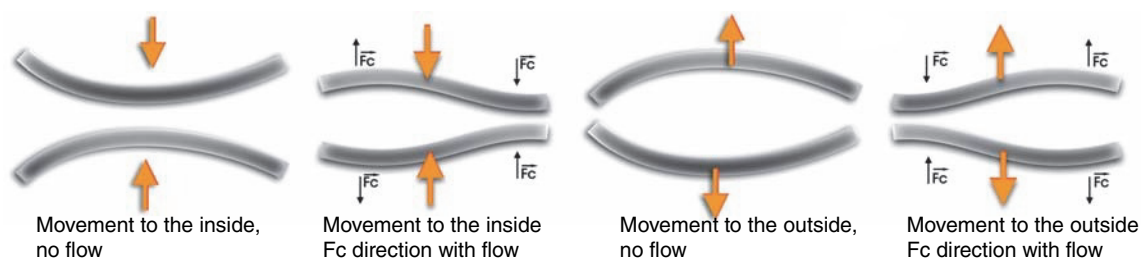

Reference Documents

This instruction covers the installation and maintenance of the CFS25 Mass Coriolis flowtubes. Refer to the list below for other supporting documents.

Table 1. Reference Documents

Document No.	Document Description
DP 019-186	CFS25 Coriolis Flowtube Dimensions
DP 019-376	Dimensional Print for Digital Coriolis Mass Flow Transmitter Model CFT51
MI 019-140	I/A Series® Digital Coriolis Mass Flow Transmitter With HART and MODBUS Communication Protocols Model CFT51
MI 019-141	I/A Series® Digital Coriolis Mass Flow Transmitter Model CFT51 Safety Connection Diagrams (FM, CSA)
MI 019-179	Flow Products Safety Information
PL 008-752	I/A Series® Mass Flow and Density Meters Model CFT51 Digital Coriolis Mass Flow Transmitter with HART or Modbus Communication Protocol

Standard Specifications

Mass Flow Rate Range

The mass flow rate range is dependent on the flowtube's nominal capacity. Nominal flow rate is defined as 1 bar pressure drop for water at 20°C.

Table 2. Mass Flow Rate Range

Model CFS25	Minimum		Maximum		Nominal	
	kg/h	lb/min	kg/h	lb/min	kg/h	lb/min
-0325	3	0.11	300	11	150	5.5
-0650	6	0.22	600	22	300	11
-1550	15	0.55	1,500	55	750	27.5
-3100	30	1.1	3,000	110	1,500	55
-5500	55	2.0	5,500	203	2,750	101.5
-7900	79	2.9	7,900	291	3,950	145.5
-028K	280	10	28,000	1,030	14,000	515
-065K	650	24	65,000	2,390	32,500	1,195

Process Liquid Density Range

For liquids, process fluid density ranges from 200 to 3000 kg/m^3 (12.5 to 187 lb/ft^3); or a specific gravity range of 0.2 to 3. Note that a specific gravity of 1 corresponds to a fluid density of 1000 kg/m^3 (62.4 lb/ft^3).

Approximate Mass

Flowtube mass is dependent on the flowtube's nominal capacity, materials, and end connections used.

Table 3. Approximate Mass with ANSI Flanges (a)

Model CFS25	Flange Size	ANSI B16.5 Pressure Class			
		150	300	600	900
-0325 or -0650, 316L ss	0.5 inch	8.0 kg (17.7 lb)	8.9 kg (19.7 lb)		12.6 kg (27.7 lb)
-1550 or -3100, 316L ss		11.7 kg (25.8 lb)	12.6 kg (27.8 lb)		16.2 kg (35.8 lb)
-5500, 316L ss	1 inch	6.7 kg (14.7 lb)	7.6 kg (16.7 lb)	8.5 kg (18.7 lb)	11.7 kg (25.7 lb)
-7900, 316L ss		6.4 kg (14.2 lb)	7.3 kg (16.2 lb)	8.3 kg (18.2 lb)	Not Available
-028K, 316L ss		10.3 kg (22.7 lb)	11.2 kg (24.7 lb)	12.1 kg (26.7 lb)	
-028K, Nickel alloy (b)		Contact Global Customer Support			
-065K, 316L ss	3 inch	36.5 kg (80.4 lb)	40.1 kg (88.4 lb)	42.8 kg (94.4 lb)	

a. Mass includes flowtube with Temperature Range option S (Standard), junction box, slip-on flanges, and related fittings (if applicable). See Model Code for other available end connections.

b. Equivalent to Hastelloy® C-22.

Flowtube Internal Fluid Volume

Flowtube internal fluid volume is dependent on the flowtube nominal capacity.

Table 4. Nominal Flowtube Internal Volume

Model CFS25	cm^3	in^3
-0325 -0650	5.0	0.3
-1550 -3100	33.3	2.0
-5500	22.3	1.4
-7900	36.8	2.2
-028K	141.7	8.6
-065K	688.1	42.0

Flowtube Coil Resistances

Table 5. Flowtube Nominal Coil Resistances at Room Temperature

Flowtube Model CFS25	Driver Resistance	Sensor Resistance	Pt1000 Resistance
-0325 -0650 -1550 -3100	55 Ω	55 Ω	> 900 Ω
-5500 -7900 -028K -065K	116 Ω	116 Ω	

Maximum Process Pressure

Table 6. Flowtube Process Pressure Rating (a)

Model CFS25	Maximum Working Pressure (MWP)	
	bar	psi
-0325	200	2,900
-0650	200	2,900
-1550	200	2,900
-3100	200	2,900
-5500	345	5,000
-7900	100	1,450
-028K	100	1,450
-065K	100	1,450

a. Pressure ratings are for flowtubes only. End connections may limit the pressure rating.

Operating Conditions

Influence	Reference Operating Conditions	Normal Operating Condition Limits	Transportation and Storage Limits
Process Temperature	Water at 23 ±8°C (73 ±13°F)	Per Temperature Range selection in Model Code	Not Applicable
Process Pressure	Water at 100 to 500 kPa (15 to 75 psi)	See Table 6	Not Applicable
Ambient Temperature (a) (b) (c)	23 ±2°C (73 ±3°F)	–40 and +70°C (–40 and +158°F)	–40 and +100°C (–40 and +212°F)
Relative Humidity	50 ±10%	5 and 100% (d)	0 and 100% Noncondensing

a. Where lagging or heat tracing of flowtube is involved, the case temperature may exceed these limits.
b. PVC insulated cable is suitable for ambient temperatures from –20 to +80°C (–4 to +176°F).
FEP insulated cable is suitable for ambient temperatures from –40 to +85°C (–40 to +185°F).
c. Refer to Table 7 for restrictions in ambient temperature with certain electrical certifications.
d. 100% relative humidity value includes condensation.

Vibration Stability

Vibration stability has been validated per IEC 61298-3 for up to 10 m/s^2 (1 *g*) at 5 to 500 Hz.

Product Safety Specifications

The flowtubes have been designed to meet the electrical safety description listed in this section. For detailed information or status of testing laboratory approvals/certifications, contact Global Customer Support.

Table 7. Electrical Safety Specification

Testing Laboratory, Type of Protection, and Area Classification	Application Conditions (a)	Electrical Safety Design Code
CSA/CSAus Intrinsically Safe Class I, Division 1/Zone 0, Groups C, D	Temperature Class T4 Ta = -40°C to +70°C Connected to CFT51 Electrical Safety Code CDA or CNA	CAA
ATEX Intrinsically Safe Ex ia/ic, Group IIB	Temperature Class T4 Ta = -40°C to +70°C Connected to CFT51 Electrical Safety Code ADA or ANA	AAA
IECEx Intrinsically Safe Ex ia/ic, Group IIB	Temperature Class T4 Ta = -40°C to +70°C Connected to CFT51 Electrical Safety Code EDA or ENA	EAA
No electrical certification		YYY

a. Process temperature range is -100°C to +70°C.

2. Installation

General Safety

All statements regarding safety of operation and technical data in this Instruction apply only when the unit is operated correctly in accordance with this Instruction.

The data for Ingress Protection apply only when all connectors are capped properly with a corresponding counterpart with the same or better IP rating. Cable glands must be populated with cables with the specified diameter and closed properly. The display cover must be closed.

During operation, all openings of the housing must be closed unless otherwise noted in this Instruction.

All connections to the load and to the supply must be made with shielded cables unless otherwise noted in this Instruction. This unit must be grounded.

As a protection against fire in the positive supply, a fuse with a current rating not higher than the current carrying capacity of the cable used is required.

Before installing the flow meter and transmitter, the user is responsible to ensure that all wetted parts are compatible with the fluid or gas to be measured.

The user must adhere to the instructions for installing electrical devices and corresponding instructions.

The devices described in this Instruction must be connected and operated only by authorized and qualified personnel.

Flowtube Identification

The flowtube data plate is located on the rear side of the flowtube body. The data plate includes the model code, agency markings, and values that are required for programming the transmitter.

Figure 2. Data Plate Location and Flowtube Identification

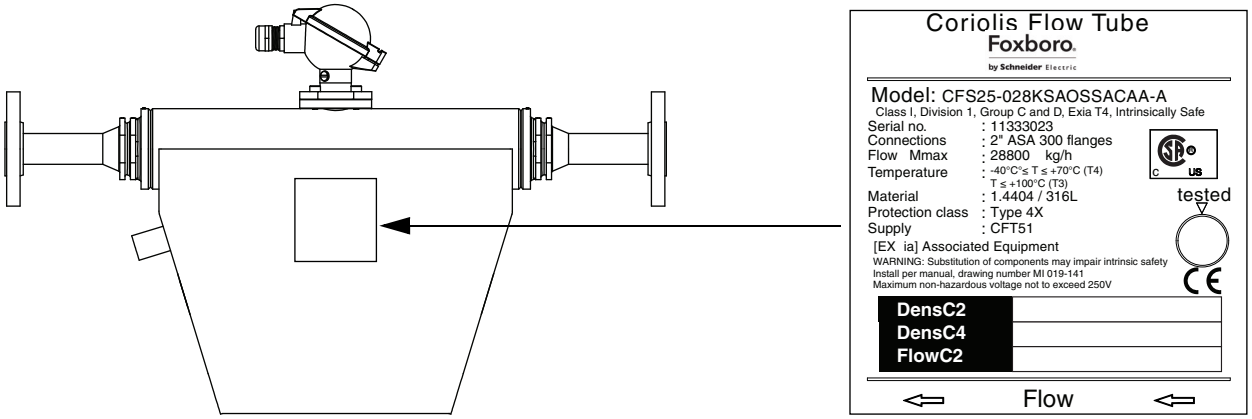

REAR OF FLOWTUBE BODY

REPRESENTATIVE DATA PLATE

NOTE

Before installing the flowtube, copy the following information from the flowtube data plate (see Figure 2): `Model`, `Serial No.`, `Flow Mmax`, `DensC2`, `DensC4`, and `FlowC2`. This information is required when programming the transmitter.

Moving the Flowtube

Care must be exercised when moving the flowtube to avoid personal injury and prevent damage to the flowtube, junction box, and cable. Refer to the following recommendations for proper handling and support of the flowtube.

- Before removing flowtube from shipping container, move the flowtube as close to the installation location as possible.
- Smaller flowtubes can be removed from the shipping container and installed between the upstream and downstream pipe connections by hand lifting and carrying.
- Larger flowtubes must be lifted and restrained on all sides to prevent rotation as the flowtube is lifted.

! CAUTION

Do **not** lift or support the flowtube by its junction box or cable.

Mounting Considerations

To ensure the highest degree of accuracy and repeatability, take care to install the flowtube in a stable process site and minimize the amount of vibration in the installation environment.

- To avoid potential vibration, connect the meter rigidly to a non-vibrating point. If this is not possible, install with vibration dampers.
- Smaller meters (CFS25-0325 through CFS25-3100) can be mounted with optional mounting threads on the back side.
- All other meters must be installed via holders connected to the external tubing, as close as possible to the flanges of the meter.
- If tubes vibrate, it may be necessary to decouple them with flexible hoses.
- Pumps that produce a strongly pulsating flow, such as piston pumps, should be decoupled hydraulically with longer pipes, flexible tubes, or other measures.

Figure 3. Flowtube Features

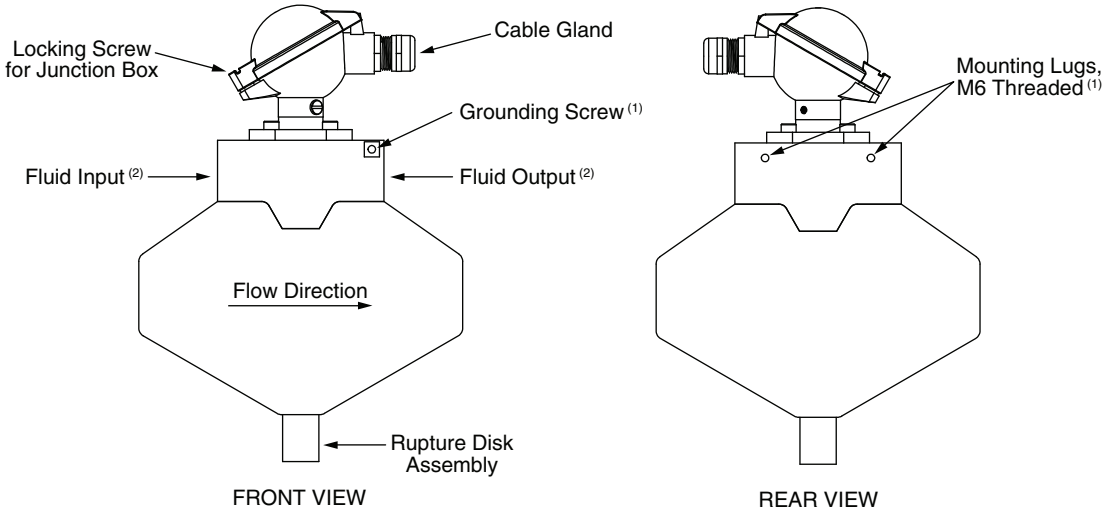

NOTES:
1. Available on -0325, -0650, -1550, and -3100 flowtubes only.
2. Fluid ports are fitted with end connections as ordered.

Other Considerations

- The flowtube and cable should be mounted no closer than 3 m (10 ft) from any motor, speed controller, large transformer, or power contactor.
- When required by the process application, the flowtube can be heat traced or insulated with a lightweight material.

DANGER

If the process fluid is a gas at ambient conditions, but is in the liquid state due to line pressure, the flowtube **must** be enclosed in a containment unit. In the event of a break in the flowtube, increasing pressure inside the flowtube case can cause the case to burst. Failure to comply with this warning could result in severe injury or death.

Mounting Procedure

The flowtube can be mounted horizontally or vertically.

- Mount the sensor so that it will remain full of the process fluid at all times.
- To maintain positive head pressure at the sensor, never mount the sensor at the highest point in the flow line.
- Orient the sensor so that the flow direction arrow points in the direction of flow (i.e., downstream).
- When mounted vertically, as in self-draining applications, the direction of flow must be upward to minimize the incidence of trapped air.

All of the following steps apply to both horizontal and vertical mounting. Refer to the sections that follow for information specific to horizontal or vertical installations.

1. Determine the face-to-face distance between the flowtube end connections. Refer to "Reference Documents" on page 10 for Dimensional Prints.
2. Fabricate the end connections to the pipe.
   - A filter is recommended on the smaller flowtubes to minimize problems with dirt particles introduced during installation.
3. Provide upstream and downstream flowline supports. Supports can extend from floor, ceiling, or wall, as convenient, but should not be firmly secured to the pipeline at this time. Refer to Figure 4 for recommended types of pipeline supports.

NOTE

Do not use supports on the sensor itself or on the housing.

   - "Rest" supports should not be used for tri-clamp connections.
   - Each support must contact the flowline as close to the junction of the pipe and flowtube enclosure as possible. For flowtubes with flanged end connections, the distance between each support and the junction must not exceed 38 cm (15 inches).
   - For tri-clamp end connections, and for flowtubes CFS25-5500 and greater, additional supports must be positioned between the flowtube enclosure and the junction of flowtube and pipeline.
   - When installing a tri-clamp flowtube in a vertical pipeline, ensure that the pipeline supports are also between the enclosure and end connection.
   - All supports must provide a minimum of 25 mm (1 in) of axial length of surface contact.
4. Move the flowtube into position between the flowline end connections. The arrow on the flowtube must point in the direction of flow.
5. Align the flowtube and flowline end connections, and secure the flowtube to the flowline. Refer to "End Connections" on page 23.
6. Firmly secure the supports.

Figure 4. Recommended Pipeline Supports

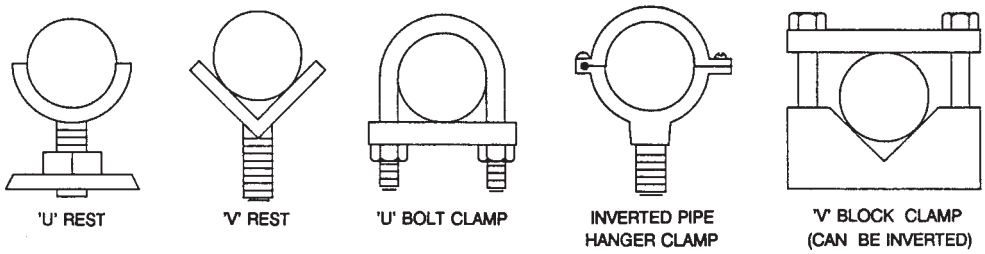

Horizontal Installation

Horizontal installation is recommended for all CFS25 flowtubes.

If the process fluid might contain solid particles, mount the meter as shown in Figure 5. In all other cases, including applications in which gas bubbles are expected, mount the meter as shown in Figure 6.

Secure the meter to a solid, non-vibrating surface that is as close to the meter as possible. With the CFS25-0325 through CFS25-3100, this can be done with the mounting threads.

If no non-vibrating surface is available, vibration dampers are recommended.

Self-Draining Applications

- For self-draining applications, diamond-shaped tubes (CFS25-0325 through CFS25-3100) should be installed as shown in Figure 5.
- For self-draining applications, flowtubes CFS-5500 to CFS-065K must be mounted vertically, and direction of flow must be upward to minimize the incidence of trapped air. Refer to "Vertical Installation" on page 20.

Figure 5. Flowtube Installation in a Horizontal Pipeline - Solid Particles in Process Fluid

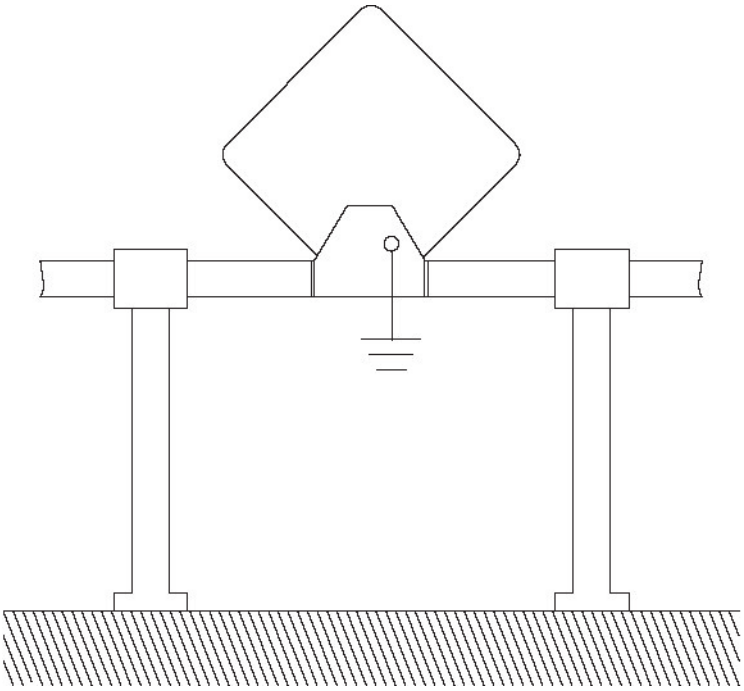

Figure 6. Flowtube Installation in a Horizontal Pipeline - No Solid Particles in Process Fluid

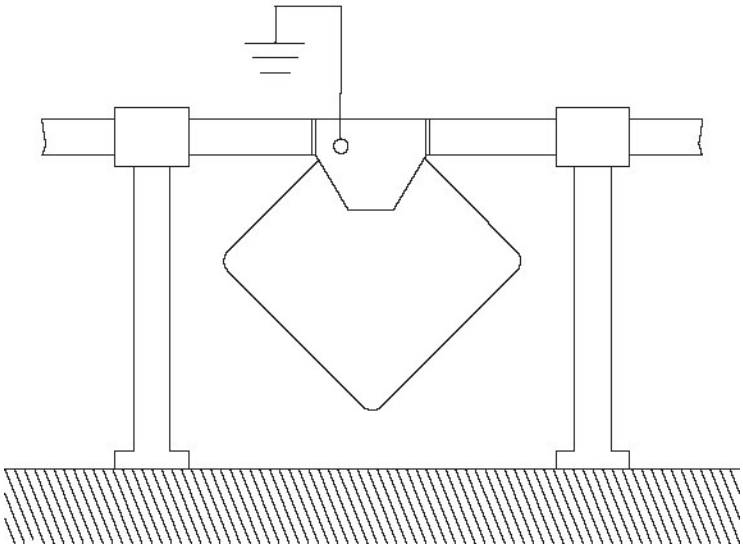

Vertical Installation

Flowtubes CFS25-0325 through CFS25-3100 can be mounted vertically only if gas bubbles or solid particles are **not** expected in the process fluid. Bubbles and particles can become trapped in the diamond-shaped tube geometry of these flowtubes.

Flowtubes CFS25-5500 and greater **can** be mounted vertically. This is the recommended orientation for these flowtubes if the process fluid might contain gas bubbles or solid particles.

NOTE

When vertical mounting is used, upward flow direction is recommended.

Mount the meter in an upstream position to prevent the meter from becoming empty during operation. See Figure 7.

Secure the meter to a solid, non-vibrating surface that is as close to the meter as possible.

If no non-vibrating surface is available, vibration dampers might be recommended.

Figure 7. Flowtube Installation in a Vertical Pipeline

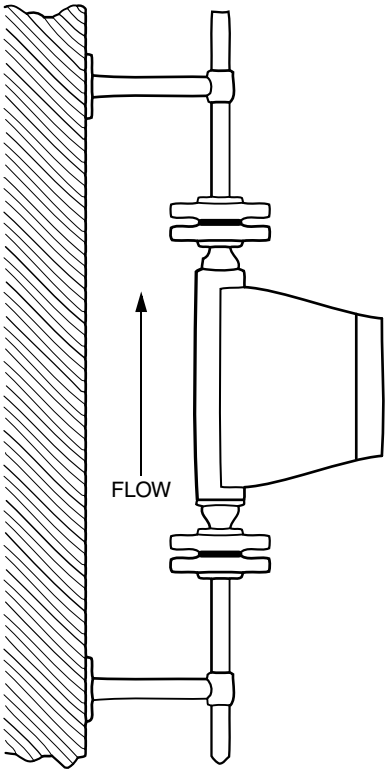

Installation in a Drop Line

Mounting in a drop line is feasible only if an orifice and closing valve are located below the meter. This is necessary to ensure that the meter does not become empty either during operation or after the valve is closed. See Figure 8.

In a drop line, the meter must not be mounted near the open end of the piping, as in that case the meter could run empty.

Figure 8. Flowtube Installation in a Drop Line

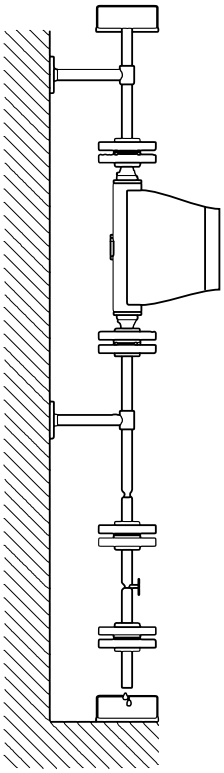

End Connections

Flanged End Connections

Refer to current pipe flange and fitting standards for proper gasket dimensions.

1. Insert the lower mounting bolts (2 for 4-hole flanges, or 4 for 8-hole flanges).
2. Position the gasket between the flanges.
3. Insert the remaining mounting bolts.
4. Add the washers and nuts to all bolts and hand tighten only.
5. Secure the meter by tightening the nuts in uniform steps, working from nut to opposite nut.
6. Tighten the hardware to secure the pipeline to the supports.

Figure 9. Flanged End Connection

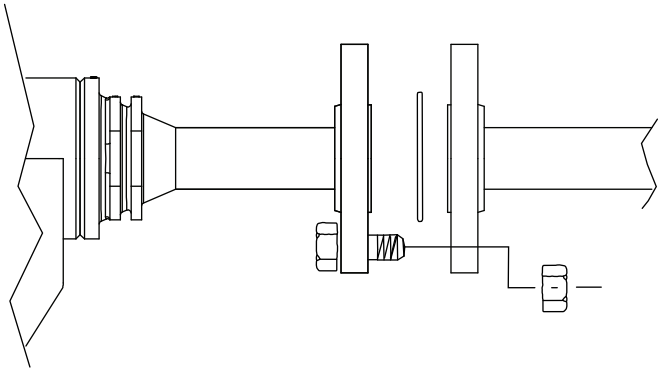

DIN Coupling End Connections

1. Insert the seal into the groove in each flowtube end connection.
2. Bring the pipeline end connection into full contact with the flowtube end connection and tighten the nut on the pipeline end connection securely.
3. Tighten the hardware to secure the flowtube and flowline to the supports.

Figure 10. DIN Coupling End Connection

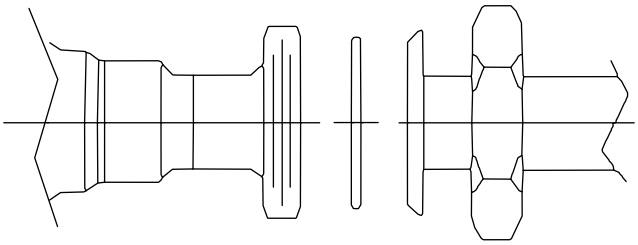

Threaded End Connections

1. Apply process compatible thread sealant to the threaded flowtube end connection.
2. Secure the threaded pipe adapter to the flowtube threaded end connection.
3. Secure the pipeline end of adapter to the pipeline.
4. Tighten the hardware to secure the flowline to the supports.

Tri-Clamp End Connection

1. Insert the seal into each flowtube end connection.
2. Make full face contact between the flowtube end connection and the pipeline end connection.
3. Position the clamp over the mating surfaces of the flowtube end connection and the pipeline end connection and press the clamp closed.
4. Tighten the hardware to secure the flowtube and pipeline to the supports.

Figure 11. Tri-Clamp End Connection

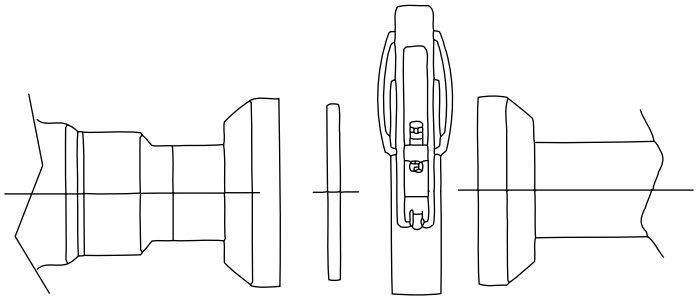

3. Wiring

The installation and wiring of the flowtube must conform to local code requirements. If the flowtube is classified intrinsically safe (refer to model code), it also must conform to national standards for installation of intrinsically safe equipment in potentially hazardous areas.

DANGER

If the flowtube is classified intrinsically safe, connect the ground (potential equalizing) terminals on the flowtube (refer to the Dimensional Prints listed in Table 1) and the transmitter (see MI 019-140 and MI 019-141) to the building signal ground reference point with a dedicated wire of 12 AWG or larger. The total resistance of the ground path must not exceed 1 Ω. Note that this is in addition to the transmitter ac power ground. **The intrinsic safety of the flowtube and interconnecting wiring is dependent on making this connection.**

Make sure that the unit is properly mounted, and the process input and output are connected, before making the electrical connections. The flow meter must be grounded.

The digital inputs and outputs are referred to GND and to the ground potential of the DC supply (= negative pole). The AC supply terminals are electrically isolated from all inputs and outputs.

The ground potential GND is connected to protective ground via a 1 kΩ.

For connecting the transmitter, shielded cables must be used. The shield should be connected to the case. If, in a large system, the shield must not present a DC connection for avoiding high ground loop currents, make the ground connection of the shield via a capacitor of e.g. 100nF.

Figure 12. Mass Flowmeter: CFS25 Flowtube Connected to a CFT51 Transmitter

Junction Box

An electrical junction box meeting NEMA 4X and IP65 requirements is mounted on each flowtube. It is fitted with a 1/2 NPT female cable entrance. Inside the junction box, a pair of five-position feedthrough type screw terminal blocks (spaced for intrinsic safety) are wired to the flowtube.

Signal cable is not supplied with the flowtube, but a PVC-insulated or FEP-insulated cable is available in specific lengths from 6 to 30 m (20 to 100 ft) with the CFT51 transmitter and can also be purchased separately. One end of the cable is prepared for direct connection to the transmitter.

- The PVC cable can be used for most applications within an ambient temperature range of -20 to +80°C (-4 to +176°F).
- The FEP cable is suitable for ambient temperatures from -40 to +85°C (-40 to +185°F).

! CAUTION

Do **not** route signal cable close to power cables or equipment that can produce a large magnetic field.

If conduit is to be used, install a watertight conduit connector and drip loop at the junction box to prevent collection of condensate. If conduit is not used, a watertight cable grip is required. Teflon thread sealant on the connector threads is recommended to reduce the risk of galvanic corrosion.

If rigid conduit is used, the length extending from the conduit fitting must not exceed 0.3 m (12 in). This conduit must **not** be subjected to additional mechanical loading or attachment. If additional protection is required, flexible armored sheathing is recommended.

Signal Cable Preparation

If conduit is to be used, run the unprepared end of the cable through the conduit from the transmitter.

1. Cut the flowtube end of the cable to length and strip back the jacket approximately 127 mm (4 in).
2. Separate the twisted-pair conductors from their wrappers, shields, and drain wires. The wire pairs should remain twisted for ease of identification.
3. Trim the shields, wrappers, and drain wires back to the jacket interface.
4. Strip the ends of the conductors 6 mm (1/4 in).

Flowtube Wiring

1. Open the junction box of the flowtube.
2. Feed the cable from the transmitter into the cable gland of the flowtube.
3. Connect the individual colored wires to the terminal block as shown in Table 8. Tighten the screws. No bare wire should be visible.

   The RTD attaches to the CFT51 transmitter with a four-wire connection. To connect the four wires to the flowtube junction box, twist one pair of wires together to connect to terminal 7 and twist the other pair together to connect to terminal 8.
4. Tighten the cable gland to seal it around the cable sheath.
5. Close the top cover of the junction box and fasten it with the locking screw to seal it from moisture.
6. Refer to MI 019-140 for CFT51 wiring instructions.

Table 8. Flowtube Junction Box Wiring Color Orientation

LEFT SIDE			RIGHT SIDE		
Signal	**Color (Pair)**	**Terminal**	**Terminal**	**Color (Pair)**	**Signal**
Protective ground		PE	PE	Protective ground	
RTD: Pt1000 +	Blue & Green	2 & 4	1 & 3	Black & Black	RTD: Pt1000 -
Sensor B +	Black	6	5	Red	Sensor B -
Sensor A +	Yellow	8	7	Black	Sensor A -
Driver +	Brown	10	9	Black	Driver -

Figure 13. Flowtube Junction Box

4. Startup

Sizing Your Flowtube and Determining Pressure Loss

In most cases a flowtube is specified with a particular process application in mind. However, to apply a flowtube to another application, its sizing and pressure loss must be considered. The best way to do this is to use the FlowExpertPro™ software program at www.FlowExpertPro.com.

Filling the Flowtube

Filling of the flowtube requires a period of continual flushing to remove all air from the flowtube. Proceed as follows:

1. Slowly fill the flowtube, avoiding hydraulic shock to flowmeter and associated piping.
2. Flush at highest possible flow rate within operating range for a minimum of five minutes. Flushing rate must be above 2 ft/s.

Zeroing

1. Close valves to ensure zero flow.
2. Allow 30 seconds minimum for flow to settle at zero.

The flowtube is now ready for zeroing with the CFT51 transmitter. For zeroing procedure from the CFT51 transmitter keypad or a HART Communicator, refer to MI 019-140.

If elapsed time between flushing and zeroing exceeds 10 minutes, the flowtube must be flushed again for five minutes and the zeroing procedure repeated.

NOTE

Flowtube must remain full with process fluid to maintain accurate, repeatable results. In applications where flowtube is frequently emptied or partially emptied and refilled, flowtube must be properly filled, avoiding hydraulic shock. **Rezeroing is not generally required.**

5. Troubleshooting

RTD Res Low or RTD Res High

The problem of RTD resistance being too low or too high can be caused by a wiring problem; either in the transmitter Resistance Temperature Detector (RTD) drive current circuits or the 2-wire IEC Pt 1000 RTD in the flowtube. Perform the following tests to locate the problem.

1. Disconnect flowtube connection terminations 1 through 4 at the transmitter. Using an ohmmeter, confirm that continuity (a short circuit) exists between the flowtube wires normally connected to terminals 1 and 3 and then 2 and 4.
2. Using an ohmmeter, confirm that approximately 1100Ω at 25°C (77°F) exists between the flowtube wires normally connected to terminals 1 (or 3) and 2 (or 4). The resistance is dependent on flowtube temperature at time of measurement. Nominal resistance is 1000Ω at 0°C (32°F). See Figure 14.
3. Place 1100Ω resistor across transmitter terminals 3 and 4. Voltage measured across the resistor should typically be between 396 and 484 mV (440 mV nominal). If voltage reading is not within this range, contact Global Customer Support. Transmitter replacement may be required.

NOTE

This is a diagnostic test only. Temperature measurement accuracy is not directly related to the absolute value of measured voltage.

Figure 14. Resistance between Flowtube Wires Connected to Transmitter Terminals 1, 2, 3, and 4

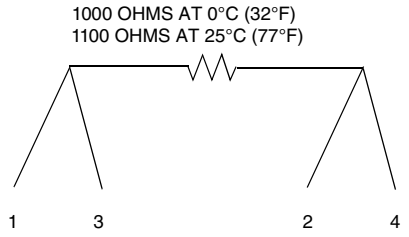

6. Maintenance

Cleaning the Flowtube

The flowtube must be cleaned at intervals dictated by the properties of the process fluid or industry requirements. Avoid hydraulic shocks (fluid hammer) while cleaning because such shocks could damage the flowtube.

WARNING

Be sure that power is disconnected from flowtube during the cleaning process.

If the flowtube is to be removed for cleaning, proceed as follows:

1. Open or close valves as required to isolate the flowtube from the process.
2. Drain the flowtube using appropriate venting procedures.

CAUTION

A significant amount of liquid is retained in a horizontally mounted flowtube and it can flow out of the flowtube when it is moved.

3. Disconnect the flowtube from the pipe. Handle with care to avoid damage to the flowtube.
4. Flush as required.

CAUTION

When cleaning a flowtube, be sure that the flow, pressure, and temperature ratings of flowtube are not exceeded.

5. Return the flowtube to operation.

Flowtube Repair

The flowtube is not field repairable. For troubleshooting and assistance, refer to "Troubleshooting" on page 31.

If problems arise, contact Global Customer Support. If the flowtube or transmitter issue cannot be solved via telephone interaction, the instrument must be returned to the factory for evaluation and repair.

Prior to shipping the instrument, a return authorization number must be issued. The service department representative can assist in providing this information. In addition, it is imperative that the internal structure of the flowtube be thoroughly cleaned and degreased prior to shipping. A letter (signed by a process engineer/manager) stating that cleaning was performed, as well as MSDS sheets stating the plant process fluid used, must accompany the returned flowtube.

ISSUE DATES

MAR 2015
MAY 2015

Vertical lines to the right of text or illustrations indicate areas changed at last issue date.

Invensys Systems, Inc.
10900 Equity Drive
Houston, TX 77041
United States of America
http://www.invensys.com

Global Customer Support
Inside U.S.: 1-866-746-6477
Outside U.S.: 1-508-549-2424
Website: http://support.ips.invensys.com

Invensys is now part of Schneider Electric.

0515