WIRING FOR ASCO® 185L SERIES POWER TRANSFER LOAD CENTER RATED 200 AMPERES, 240 VOLTS, 50-60 Hz, SINGLE PHASE/3 WIRE, GROUP 4 CONTROLS

CONTROL FEATURES

VOLTAGE AND FREQUENCY SENSING

A. VOLTAGE SENSING – PREFERRED SOURCE
DROPOUT SETTING ADJUSTABLE AT 198V, 187V, 176V, OR 154V. FACTORY SET AT 187V
PICKUP VOLTAGE ADJUSTABLE AT 209V OR 198V. FACTORY SET AT 198V
(IF DROPOUT IS SET AT 198V, PICKUP MUST BE SET AT 209V).
(REFER TO THE SERIES 185 OPERATOR'S MANUAL, PN 381333–319)

B. VOLTAGE SENSING – ALTERNATE SOURCE
NON–ADJUSTABLE DROPOUT SETTING: 165V
NON–ADJUSTABLE PICKUP SETTING: 198V

C. FREQUENCY SENSING – ALTERNATE SOURCE
NON–ADJUSTABLE DROPOUT SETTING:
51Hz (FREQUENCY SET AT 60Hz NOMINAL), 43Hz (FREQUENCY SET AT 50Hz NOMINAL)

NON–ADJUSTABLE PICKUP SETTING:
57Hz (FREQUENCY SET AT 60Hz NOMINAL), 48Hz (FREQUENCY SET AT 50Hz NOMINAL)

TIME DELAYS

(FOR ADDITIONAL INFORMATION REFER TO THE SERIES 185 OPERATOR'S MANUAL, PN 381333–319)

A. OVERRIDE MOMENTARY PREFERRED SOURCE OUTAGE DELAY – ACTIVATED WHEN THE PREFERRED SOURCE FAILS. DEACTIVATED WHEN THE PREFERRED SOURCE IS ACCEPTABLE. PROVIDES A SELECTABLE (1 OR 3 SECOND) DELAY ON ENGINE STARTING AND TRANSFER. FACTORY SET AT 3 SECONDS.

B. TRANSFER TO ALTERNATE SOURCE DELAY – PROVIDES A DELAY TO ALLOW STABILIZATION OF THE ALTERNATE SOURCE. ACTIVATED AFTER THE ALTERNATE SOURCE IS ACCEPTABLE, WHEN THE PREFERRED SOURCE FAILS OR WHEN A TEST IS INITIATED.
NON–ADJUSTABLE DELAY SETTING: 10 SECONDS (APPROXIMATE)

C. OVERRIDE MOMENTARY ALTERNATE SOURCE OUTAGE DELAY – ACTIVATED WHEN THE TRANSFER SWITCH IS IN THE ALTERNATE POSITION AND THE ALTERNATE SOURCE FAILS. DEACTIVATED WHEN THE ALTERNATE SOURCE IS ACCEPTABLE. RETRANSFER TO THE PREFERRED SOURCE WILL OCCUR WHEN THE DELAY EXPIRES IF THE PREFERRED SOURCE IS AVAILABLE. PROVIDES A SELECTABLE (0 OR 4 SECONDS) DELAY. FACTORY SET AT 4 SECONDS.

D. RETRANSFER TO PREFERRED SOURCE DELAY – ACTIVATED WHEN THE PREFERRED SOURCE IS ACCEPTABLE. DEACTIVATED WHEN THE PREFERRED SOURCE FAILS WITH NO RETRANSFER TO THE PREFERRED SOURCE. ALSO DEACTIVATED WHEN THE ALTERNATE SOURCE FAILS WHILE THE PREFERRED SOURCE IS ACCEPTABLE, RESULTING IN RETRANSFER TO THE PREFERRED SOURCE.
NON–ADJUSTABLE DELAY SETTING: 5 MINUTES (APPROXIMATE)

E. UNLOADED RUNNING (GENERATOR COOL DOWN) DELAY – ACTIVATED AFTER RETRANSFER TO THE PREFERRED SOURCE. PROVIDES A SELECTABLE (2 OR 5 MINUTES) DELAY BEFORE ENGINE SHUTDOWN. FACTORY SET AT 2 MINUTES.

ENGINE CONTROL CONTACTS

ONE FORM C CONTACT THAT CHANGES POSITION ON EXPIRATION OF THE MOMENTARY PREFERRED SOURCE OUTAGE DELAY AND RESET ON EXPIRATION OF THE UNLOADED RUNNING (GENERATOR COOL DOWN) DELAY. OUTPUT CONTACTS (NR RELAY) ARE RATED 5 AMPS RESISTIVE AT 30 VDC, 2 AMPS RESISTIVE AT 250 VAC.

OPERATOR INTERFACE INDICATORS & CONTROLS

A. TRANSFER SWITCH TEST – MOMENTARY PUSHBUTTON TO SIMULATE PREFERRED SOURCE FAILURE SEQUENCE OF OPERATION. PRESS AND HOLD FOR AT LEAST 15 SECONDS TO ALLOW TIME FOR THE GENERATOR SET TO START.

B. BYPASS TIME DELAY – MOMENTARY PUSHBUTTON TO BYPASS THE ENGINE EXERCISER OPERATION OR THE RETRANSFER TO NORMAL DELAY, DEPENDING ON WHICH FUNCTION IS ACTIVE.

C. SET ENGINE EXERCISER – MOMENTARY PUSHBUTTON TO ACTIVATE A SEVEN (7) DAY TIMER FOR AUTOMATIC, WEEKLY TESTING OF THE GENERATOR. SETTINGS ALLOW TESTING WITH OR WITHOUT LOAD TRANSFER. FACTORY SET TO OCCUR WITHOUT LOAD TRANSFER.
THE TIMER IS POWERED BY A 9 VOLT BATTERY WHEN THE PREFERRED AND ALTERNATE SOURCES ARE NOT AVAILABLE.
DEPRESSING THE MOMENTARY PUSHBUTTON FOR 5 SECONDS CAUSES THE EXERCISE TO OCCUR IMMEDIATELY AND AT THE SAME TIME OF WEEK THEREAFTER.
THE FEATURE IS ACTIVATED AS A SETTING ON THE CONTROLLER.
(REFER TO THE SERIES 185 OPERATOR'S MANUAL, PN 381333–319)

D. LOAD CONNECTED INDICATORS:
GREEN LED TO INDICATE WHEN THE LOAD IS CONNECTED TO THE PREFERRED SOURCE.
RED LED TO INDICATE WHEN THE LOAD IS CONNECTED TO THE ALTERNATE SOURCE.

E. SOURCE ACCEPATABILITY INDICATORS
GREEN LED TO INDICATE WHEN THE PREFERRED SOURCE IS ACCEPTABLE.
RED LED INDICATOR TO INDICATE WHEN THE ALTERNATE SOURCE IS ACCEPATABLE.

REMOTE CONTROL FEATURES

THE FOLLOWING CONTROL PANEL INPUTS PROVIDE REMOTE CONTROL FUNCTIONS FOR THE AUTOMATIC TRANSFER SWITCH. EACH CONTROL FUNCTION CAN BE IMPLEMENTED BY THE CUSTOMER PROVIDING THE FORM OF CONTROL CONTACT DESCRIBED.
EACH CONTROL CONTACT MUST BE SUITABLE FOR A 5 VDC LOW ENERGY CIRCUIT.
EACH CONTROL FEATURE IS ACTIVATED BY SETTING A DIP TYPE SELECTOR SWITCH ON THE CONTROL PANEL.
(REFER TO THE SERIES 185 OPERATOR'S MANUAL, PN 381333–319)

A. REMOTE TEST FEATURE – REQUIRES A CUSTOMER SUPPLIED, NORMALLY CLOSED CONTACT. OPENING OF THE CONTACT SIMULATES A FAILURE OF THE PREFERRED SOURCE. THE TRANSFER SWITCH WILL REMAIN CONNECTED TO THE ALTERNATE SOURCE UNDER ALL CONDITIONS OF THE GENERATOR WHILE THE CONTACT IS OPEN.

B. REMOTE TRANSFER TO ALTERNATE SOURCE FEATURE – REQUIRES A CUSTOMER SUPPLIED, NORMALLY CLOSED CONTACT. OPENING OF THE CONTACT CAUSES ENGINE STARTING AND TRANSFER TO THE ALTERNATE SOURCE. RECLOSURE OF THE CONTACT ACTIVATES THE RETRANSFER TO PREFERRED SOURCE DELAY FOLLOWED BY RETRANSFER TO THE PREFERRED SOURCE. IF THE ALTERNATE SOURCE FAILS WHILE THE TRANSFER SWITCH IS CONNECTED TO IT AND THE REMOTE CONTACT IS OPEN, THE TRANSFER SWITCH WILL RETRANSFER TO THE PREFERRED SOURCE.

C. BYPASS TRANSFER TIME DELAY FEATURE – REQUIRES A CUSTOMER SUPPLIED, REMOTE, NORMALLY CLOSED CONTACT. OPENING OF THE CONTACT BYPASSES THE RETRANSFER TO PREFERRED SOURCE DELAY IF ACTIVE.

GENERAL NOTES

1. SWITCH SHOWN DE–ENERGIZED AND CONNECTED TO PREFERRED SOURCE.
   DEVICE SYMBOLS AND DESIGNATIONS ARE IN ACCORDANCE WITH NEMA PUB. ICS 1–1983, PART 1–101A.
2. ALL WIRING IS #16 AWG, TINNED, STRANDED COPPER UNLESS OTHERWISE INDICATED.
3. ○ INDICATES CUSTOMER CONNECTION POINTS.
4. ● INDICATES FACTORY CONNECTION POINTS.
5. CONNECTION POINTS THAT HAVE BOTH CUSTOMER CONNECTIONS AND FACTORY CONNECTIONS ARE SHOWN OPEN AS CUSTOMER CONNECTION POINTS.
6. A SERIES 185 OPERATOR'S MANUAL (PN 381333–319) IS PROVIDED WITH THE TRANSFER SWITCH. REFER TO THIS PUBLICATION PRIOR TO INSTALLATION AND OPERATION.

OPTIONAL ACCESSORIES

ACC. 14A (1) AUXILIARY CONTACT CLOSED WHEN THE TRANSFER SWITCH IC CONNECTED TO THE PREFERRED SOURCE. FIELD INSTALLED KIT WHEN PROVIDED.

ACC. 14B (1) AUXILIARY CONTACT CLOSED WHEN THE TRANSFER SWITCH IS CONNECTED TO THE ALTERNATE SOURCE. FIELD INSTALLED KIT WHEN PROVIDED.

FIELD CONNECTIONS

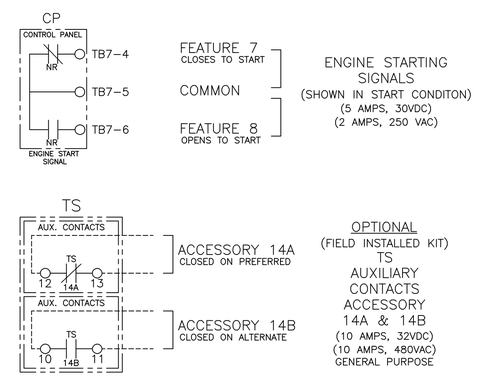

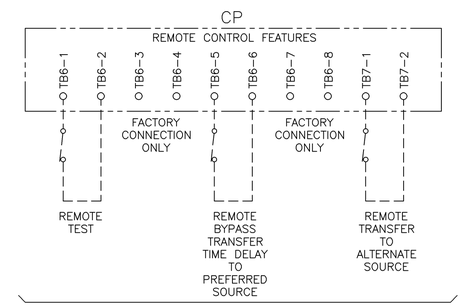

CUSTOMER SUPPLIED CONTACTS FOR FEATURES AS DESCRIBED IN STANDARD CONTROL FEATURES NOTES. CONTACT MUST BE SUITABLE FOR 5V DC LOW ENERGY CIRCUIT. ACTIVATED BY SETTING OF DIP SELECTOR SWITCHES ON CONTROL PANEL. (REFER TO OPERATOR'S MANUAL FOR REQUIRED SETTINGS.)

BASE CATALOG NUMBER					CATALOG NUMBER SUFFIXES			
TS FRAME	CATALOG TYPE	BRANCH CIRCUITS	PHASE POLES	AMPS	VOLT CODE	CONTROLLER	OPTIONAL ACCESSORY	ENCLOSURE CODE
D	185L	4 (42)	2	200	F	4	X BLANK FOR NONE	C M

EXPLANATION OF CATALOG NUMBER CODES

NEUTRAL TYPE		VOLTAGE CODES 1 PHASE (2 OR 3 WIRE) 50 OR 60 Hz		ENCLOSURE CODES		
CODE	DESCRIPTION	CODE	NOMINAL VOLTAGE	CODE	TYPE	DESCRIPTION
BLANK	SOLID	F	240	C	1	GENERAL PURPOSE, INDOOR
				M	3R	OUTDOOR, RAINPROOF, SLEET & ICE RESISTANT SECURE TYPE: FULL EXTERIOR DOOR WITH INTERNAL DEAD FRONT PANEL.

REV. TO SHEET	ECN NO.	BY	APP.	DATE
A	224029	DAJ	JPB	8/25/09
	SEE ECN			
—	222838	JPB	JPB	05/05/09
	ISSUE			

PROJECT NAME:

WIRING | DIAGRAM

SERIES 185L, 200A, 240/120V, SINGLE PHASE, 3 WIRE
D FRAME POWER TRANSFER LOAD CENTER, GROUP 4 CONTROLS

THIRD ANGLE PROJECTION

	BY	DATE
DRAWN BY	JPB	05/05/09
CHECKED		
PROJECT APPROVAL		
FINAL APPROVAL	JPB	05/05/09

MANUFACTURING TOLERANCES TO BE IN ACCORDANCE WITH ASCO PROCEDURE MP–I–003. FOR PLASTIC PARTS SEE MP–I–055

ASSEM. REF. NO.

PROPERTY OF ASCO POWER TECHNOLOGIES. USE PERMITTED FOR OUR WORK ONLY. ALL RIGHTS OF DESIGN OR INVENTION ARE RESERVED.

ASCO® ASCO POWER TECHNOLOGIES, L.P.
FLORHAM PARK, NEW JERSEY 07932 U.S.A.

COMPUTER GENERATED DRAWING

SCALE 1:1 | SIZE DS

DWG. NO. 844554–003

DRAWING REV. A | ECN NO. 224029 | SHEET 1 OF 3

TRANSFER SWITCH POWER POLES, OPERATOR, AND SENSING

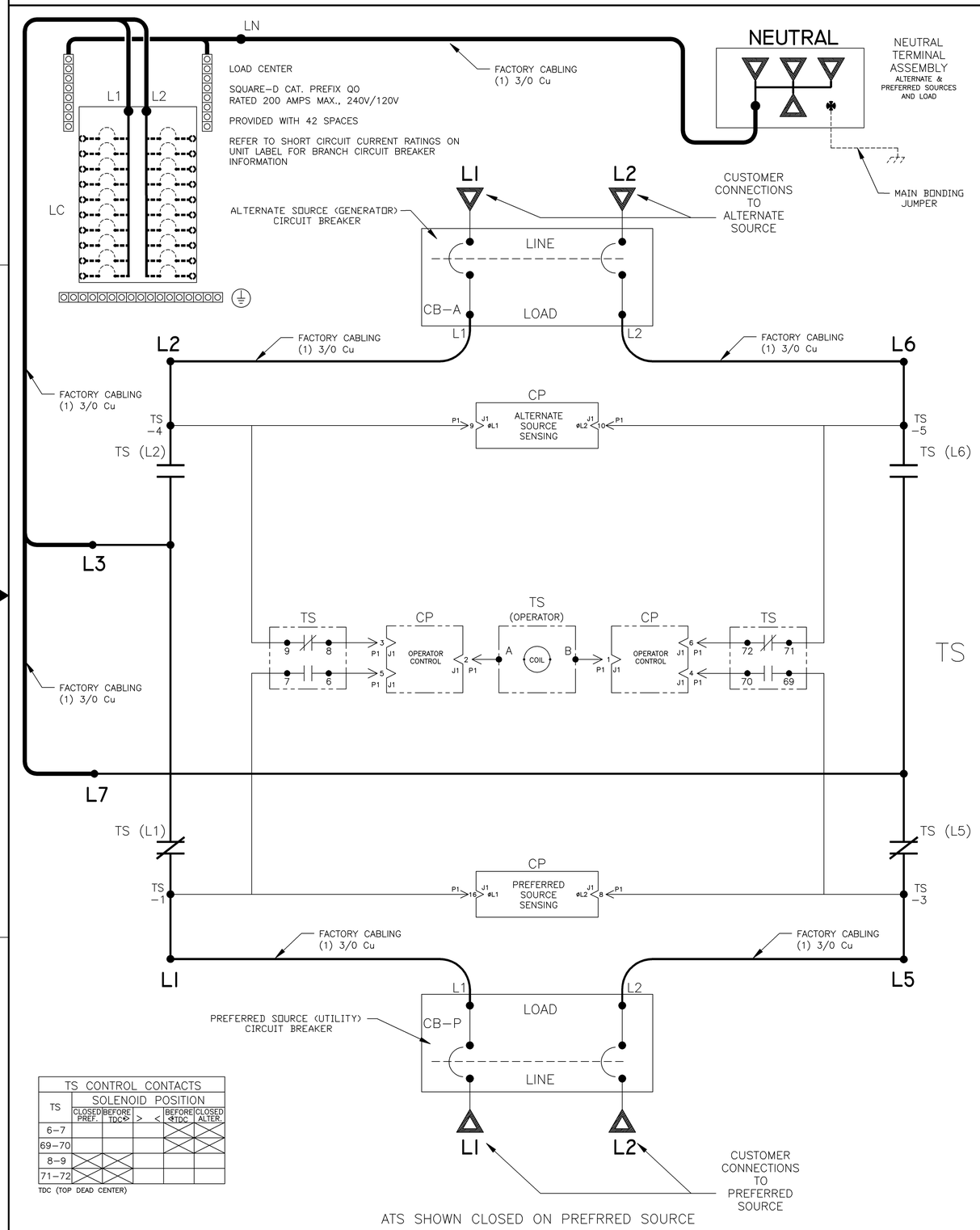

TS CONTROL CONTACTS					
TS	SOLENOID POSITION				
	CLOSED PREF.	BEFORE TDC*	>	<	BEFORE TDC*	CLOSED ALTER.
6–7				X	X
69–70				X	X
8–9	X	X			
71–72	X	X			

TDC (TOP DEAD CENTER)

ATS SHOWN CLOSED ON PREFRRED SOURCE

PHYSICAL DIAGRAM AND WIRING

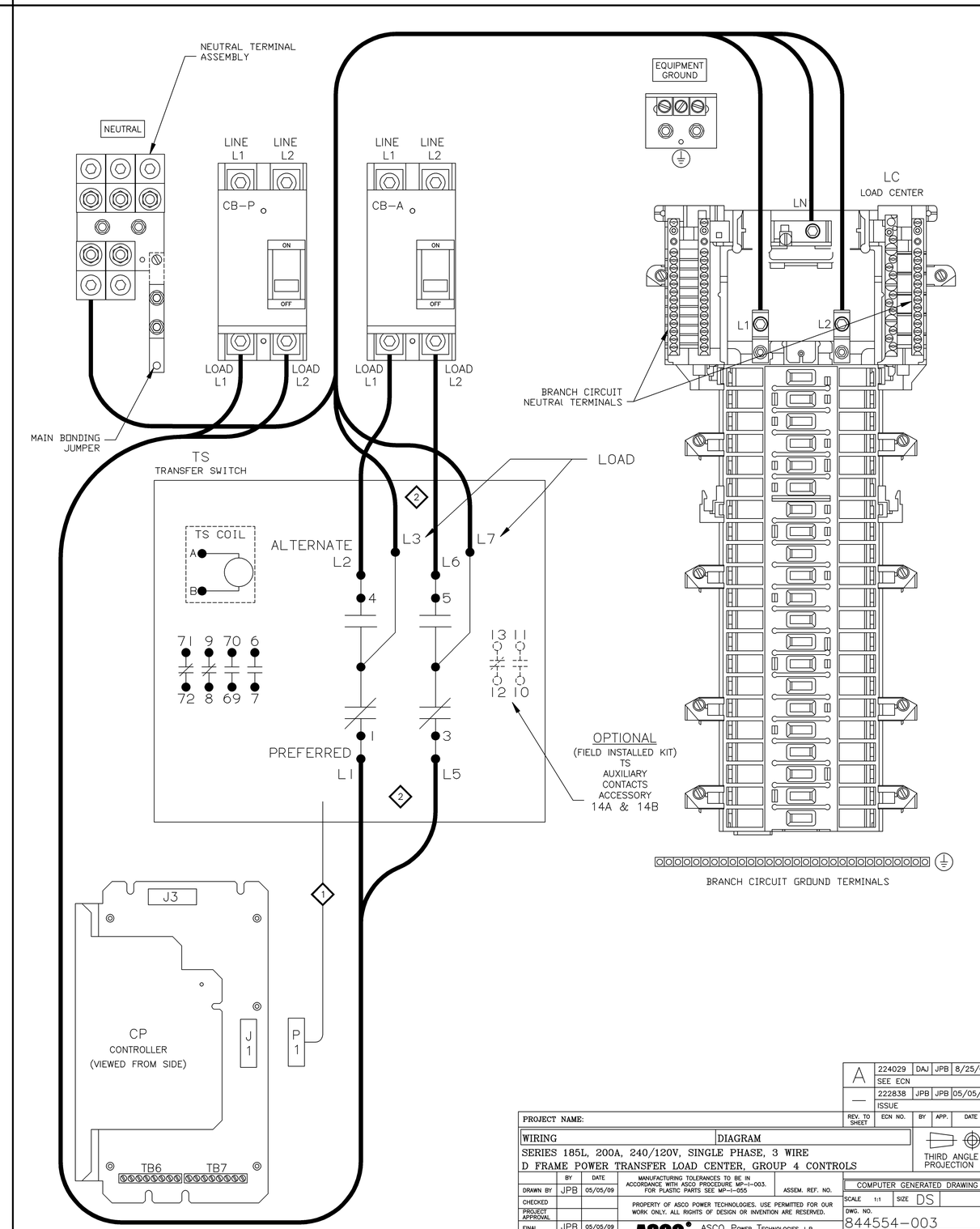

REV. TO SHEET	ECN NO.	BY	APP.	DATE
A	224029	DAJ	JPB	8/25/09
	SEE ECN			
—	222838	JPB	JPB	05/05/09
	ISSUE			

PROJECT NAME:

WIRING — DIAGRAM

SERIES 185L, 200A, 240/120V, SINGLE PHASE, 3 WIRE
D FRAME POWER TRANSFER LOAD CENTER, GROUP 4 CONTROLS

THIRD ANGLE PROJECTION

	BY	DATE
DRAWN BY	JPB	05/05/09
CHECKED		
PROJECT APPROVAL		
FINAL APPROVAL	JPB	05/05/09

MANUFACTURING TOLERANCES TO BE IN ACCORDANCE WITH ASCO PROCEDURE MP-1-003. FOR PLASTIC PARTS SEE MP-1-005

ASSEM. REF. NO.

PROPERTY OF ASCO POWER TECHNOLOGIES. USE PERMITTED FOR OUR WORK ONLY. ALL RIGHTS OF DESIGN OR INVENTION ARE RESERVED.

ASCO® ASCO POWER TECHNOLOGIES, L.P.
FLORHAM PARK, NEW JERSEY 07932 U.S.A.

COMPUTER GENERATED DRAWING

SCALE 1:1 | SIZE DS

DWG. NO. 844554-003

DRAWING REV. A | ECN NO. 224029 | SHEET 2 OF 3

WIRE RUN LISTING

1 ◄—HARNESS LOCATOR — BOX CHECKED IF HARNESS IS MODIFIED ☐

WIRE No.	702645-002 (P1,P2) MAIN TS	CLR	AWG
1	TS-8,P1-3		20
2	TS-8,P1-1		
3	TS-6,P1-5		
4	TS-3,P1-8		
5	TS-A,P1-2		
6	TS-5,P1-10		
7	TS-4,P1-9		
8	TS-1,P1-16		
9	TS-70,P1-4		
10	TS-72,P1-6		
11	TS-7,TS-1		
12	TS-69,TS-3		
13	TS-9,TS-4		
14	TS-71,TS-5		

2 ◄—HARNESS LOCATOR — BOX CHECKED IF HARNESS IS MODIFIED ☐

WIRE No.	ADDITIONAL WIRES	CLR	AWG
	CB-P-LOAD-L1,TS-L1		3/0
	CB-P-LOAD-L2,TS-L5		
	CB-A-LOAD-L1,TS-L2		
	CB-A-LOAD-L2,TS-L6		
	TS-L3,LC-L1		
	TS-L7,LC-L2		
	LC-LN,NEUT. ASSY.		

REV. TO SHEET	ECN NO.	BY	APP.	DATE
A	224029	DAJ	JPB	8/25/09
	SEE ECN			
—	222838	JPB	JPB	05/05/09
	ISSUE			

PROJECT NAME:

WIRING DIAGRAM

SERIES 185L, 200A, 240/120V, SINGLE PHASE, 3 WIRE
D FRAME POWER TRANSFER LOAD CENTER, GROUP 4 CONTROLS

THIRD ANGLE PROJECTION

	BY	DATE
DRAWN BY	JPB	05/05/09
CHECKED		
PROJECT APPROVAL		
FINAL APPROVAL	JPB	05/05/09

MANUFACTURING TOLERANCES TO BE IN ACCORDANCE WITH ASCO PROCEDURE MP-I-003. FOR PLASTIC PARTS SEE MP-I-055

ASSEM. REF. NO.

PROPERTY OF ASCO POWER TECHNOLOGIES. USE PERMITTED FOR OUR WORK ONLY. ALL RIGHTS OF DESIGN OR INVENTION ARE RESERVED.

ASCO® ASCO POWER TECHNOLOGIES, L.P.
FLORHAM PARK, NEW JERSEY 07932 U.S.A.

COMPUTER GENERATED DRAWING

SCALE 1:1 | SIZE DS

DWG. NO. 844554-003

DRAWING REV. A | ECN NO. 224029 | SHEET 3 OF 3