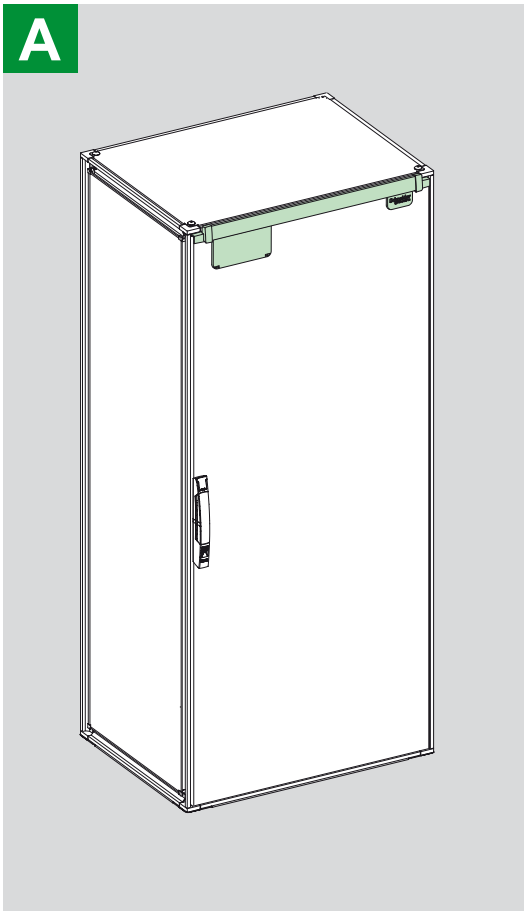

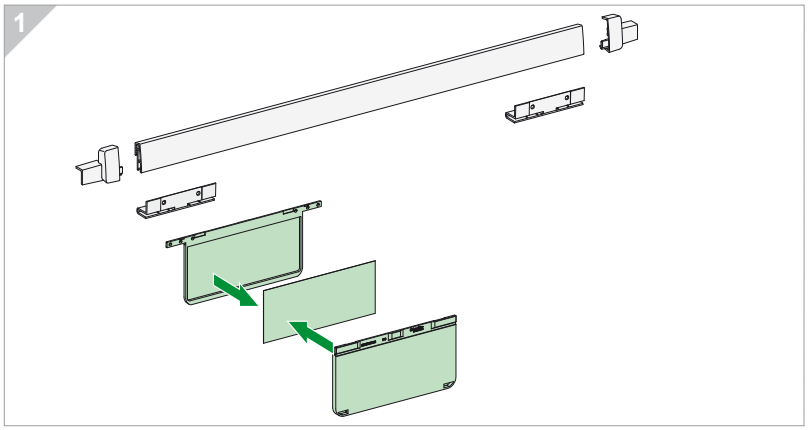

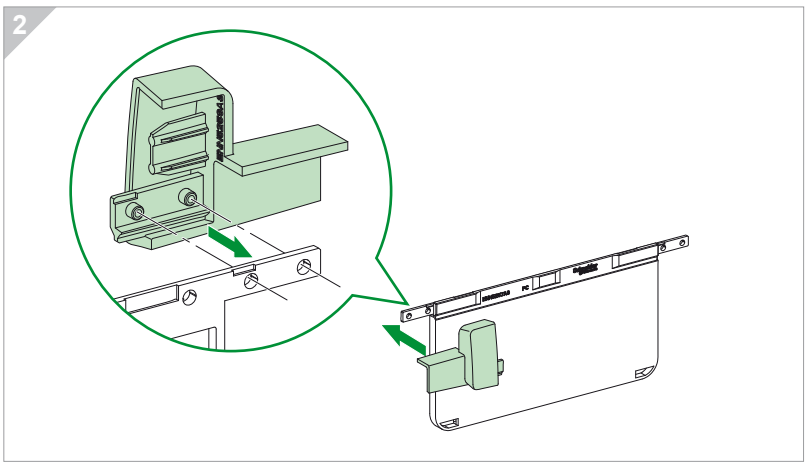

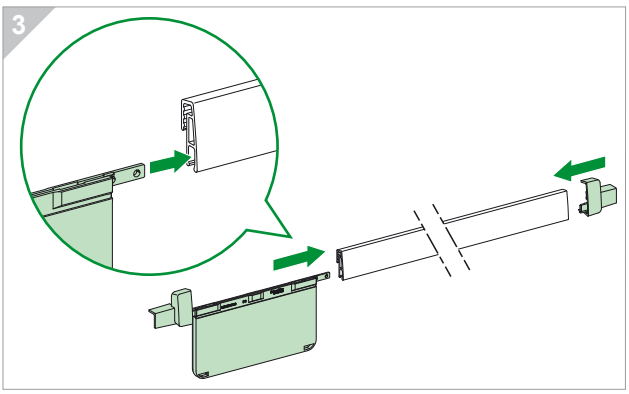

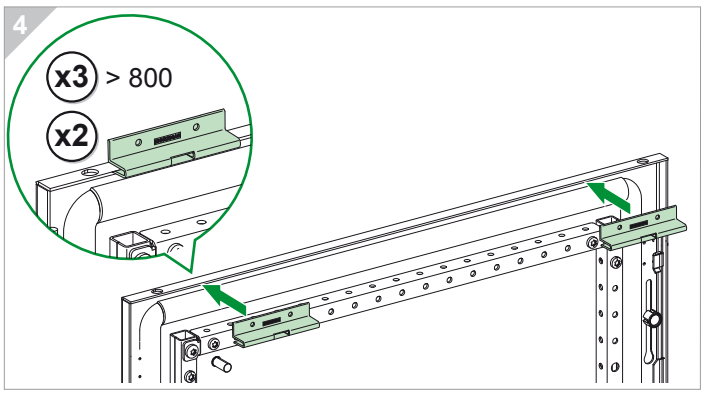

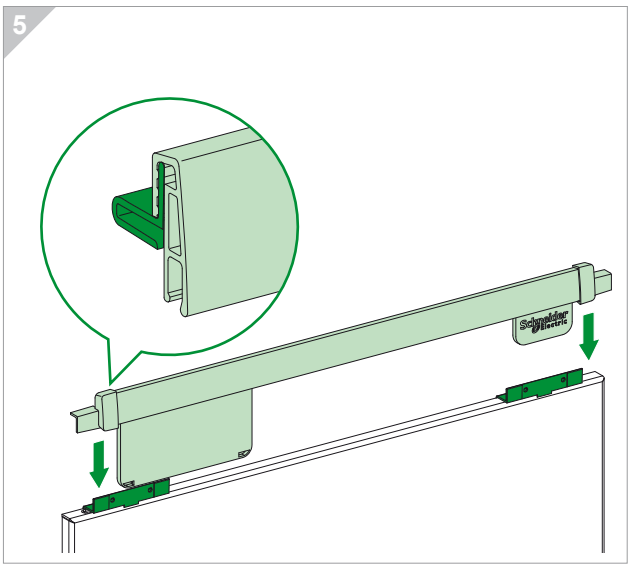

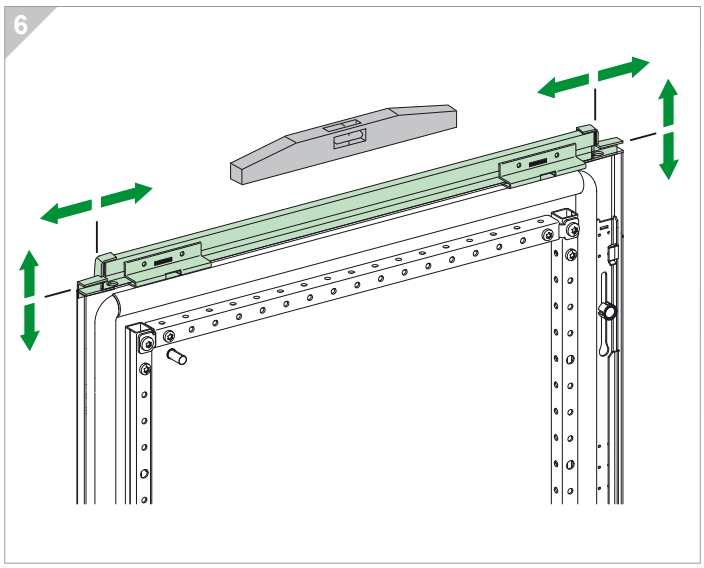

HRB4173201-00

Released for Manufacturing
Printed on 2016/06/08