Instruction

MI 020-607
August 2017

Models IAP10M, IGP10M, and IDP10M Pressure Transmitters with Modbus Communication

Installation, Operation, Maintenance, and Troubleshooting

Life Is On

Foxboro®
by Schneider Electric

Contents

Figures **9**

Tables **11**

Important Information **13**
Please Note 13

1. Introduction **15**
Overview 15
Before You Begin 15
Operation and Adjustments 16
Acceptable Use 16
Specifications 17
Communication Specifications 17
Functional Specifications 19
Span and Range Limits 19
Pressure Ratings 19
Miscellaneous Functional Specifications 20
Performance Specifications 20
Physical Specifications 21
Approvals and Certifications 22
Data Label Marking 22

2. Installation **23**
Transmitter Mounting 23
Process-Mounted Transmitter 23
Pipe- or Surface-Mounted Transmitter 25
Positioning the Transmitter Housing 26
Connections for Sensor Calibration 26
Optional Display Module 26
Adding the Optional Display 27
Rotating the Optional Display 27
Write Protect Jumper 28
Transmitter Field Wiring 28
Terminal Board Layout 29
Power Supply 30
Fusing 30

System Grounding....30
Analog Output....30
Current Output....31
Analog Output Data Format....32
Internal Analog Input....32
Serial Communication Port (COM1)....32
RS-232 Serial Communication Port....33
RS-485 Serial Communication Port....33
LAN Communication Port....35
LAN Wiring....35
Connecting Directly to a PC....36
Connecting to a Hub or Switch....36
Ethernet Wiring Recommendations....36

3. Operation....37
Operating Modes....37
Run Boot....37
Service Boot....37
Sensor Diagnostic Boot....37
Cold Boot....37
LAN LED....38
Status LED....39
Cold Boot Switch....39

4. Modbus Database....41
Modbus Communication Overview....41
Modbus Protocols....41
Modbus Function Codes....42
Modbus Station Addressing....42
Data Formats....42
Write Protecting the Modbus Database....42
Modbus Registers by Category....43
Process Variables....43
Primary Variable Value....43
Secondary Variable Value....43
Tertiary Variable Value....44
Process Variable Integer Register Mode....44
Primary Variable Units....44
Secondary Variable Units....44
Tertiary Variable Units....45
Transmitter and Sensor....45

Manufacturer's Code 45
Type Code 45
Software Revision Level 45
Sensor Software Version Level 45
Transmitter Manufacture Date 45
Transmitter Core Number 46
Sensor Hardware Version 46
Modbus Revision 46
Sensor Type 46
Tag Name (8 characters) 46
Description (16 characters) 46
Message (32 characters) 46
Communications 47
Baud Rate 47
Transmitter Address 47
Response Delay Time 47
COM1 Framing Errors 47
COM1 Parity Errors 47
COM1 Overrun Errors 47
COM1 Modbus Checksum Errors 48
COM1 Modbus Commands Received 48
COM1 Modbus Responses Sent 48
LAN Modbus Checksum Errors 48
LAN Modbus Commands Received 48
LAN Modbus Responses Sent 48
Sensor Framing Errors 48
Sensor Parity Errors 49
Sensor Overrun Errors 49
Sensor Checksum Errors 49
Sensor Commands Sent 49
Sensor Responses Received 49
PID Controller 49
Enable 49
Set Point 50
Gain 50
Reset Time 50
Rate Time 50
Deadband 50
Full Scale Limit 51
Zero Scale Limit 51
Cycle Time 51
Manual Output 51

PID Operating Mode 51
User Defined Process Value....52
Analog Output 52
Diagnostics....52
Diagnostic Bits - Operating Limits 52
Diagnostic Bits - Range Limits 53
Diagnostic Bits - Sensor and Hardware Protect....53
Modbus Register Database 54
Default Transmitter Parameters 66

5. Configuration....67
Overview....67
System Requirements 67
Installing the 4000 Series Modbus Configurator 67
Launching the 4000 Series Modbus Configurator 68
Getting Started....68
File Menu....69
Configuration Menu 69
Find Transmitter....69
Finding Transmitters on a LAN 70
Finding Transmitters on a Serial Port 70
View Readings....71
Identification Section....71
Process Measurements Section 72
Transmitter Status Section 72
Internal Measurements Section 72
Communication 73
Serial Tab....73
IP Tab....74
Protocol Tab 75
Friendly IP Tab....76
Sensor....78
DP Tab....78
SP Tab 79
RTD Tab 80
PID/Analog Tab 81
Display Tab 85
Clear List....85
Maintenance Menu 86
Calibration 86
Select Measurement to Calibrate Dialog 87

Select Calibration Type Dialog....88
Calibrate Dialog....91
Calibration Complete Dialog....94
End Calibration Dialog....95
Reset Sensor Function....96
Status/Information....97
Information Tab....98
Diagnostics Tab....99
Communication Status Tab....100
Options Menu....101
Communication Settings....101
Help Menu....102
User Manual....102
About....102

6. Maintenance....103
Venting and Draining (IDP10M)....103
Sensor Calibration....104
Before Attempting Calibration....104

7. Troubleshooting....105

8. Dimensions....107

Figures

1 Process-Mounted - Flange Mounting 24
2 Process-Mounting - 1/2 NPT Mounting 24
3 Mounting Transmitter to a Pipe or Surface - Flange Mounting 25
4 Mounting Transmitter to a Pipe or Surface - 1/2 NPT Mounting 25
5 Differential Pressure Calibration Connections 26
6 Optional Display and Write Protect Jumper 27
7 Write Protect Jumper Positions 28
8 Accessing Field Terminals 28
9 Terminal Board Layout 29
10 Input Power Wiring 30
11 Analog Output Wiring 31
12 COM1 RS-232 Wiring Example 33
13 COM1 RS-485 Wiring Example 34
14 Ethernet Wiring 35
15 RJ-45 Connection to PC 36
16 Connection to Hub or Switch 36
17 Configurator Main Window 68
18 Find Transmitter Dialog 69
19 Transmitter Status Dialog 71
20 Transmitter Communication Settings Dialog - Serial Tab 73
21 Transmitter Communication Settings Dialog - IP Tab 74
22 Transmitter Communication Settings Dialog - Protocol Tab 75
23 Transmitter Communication Settings Dialog - Friendly IP Tab 76
24 Add/Edit Friendly IP Table Item Dialog 77
25 Sensor Settings Dialog - DP Tab 78
26 Sensor Settings Dialog - SP Tab 79
27 Sensor Settings Dialog - RTD Tab 80
28 Sensor Settings Dialog - PID/Analog Tab 81
29 Analog Output Current vs Differential Pressure 82
30 Warning Dialog 84
31 Sensor Settings Dialog - Display Tab 85
32 Calibration Dialog 87
33 Select DP Calibration Type Dialog 88
34 Select SP Calibration Type Dialog 89
35 Select RTD Calibration Type Dialog 90
36 Calibrate DP Dialog 91
37 Calibrate SP Dialog 92
38 Zero RTD Dialog 92
39 Calibration Complete Dialog 94
40 End Calibration Dialog 95
41 Warning Dialog 96
42 Transmitter Status Dialog - Information Tab 98
43 Transmitter Status Dialog - Diagnostics Tab 99

44 Transmitter Status Dialog - Communication Status Tab 100
45 Communication Settings Dialog 101
46 About Configurator Dialog 102
47 Sensor Cavity Venting and Draining 103
48 IDP10M Dimensions 107
49 IAP10M and IGP10M Dimensions 108

Tables

1 General Specifications 17
2 Serial Communication Specifications 17
3 LAN Specifications 17
4 Visual Indicator Specifications 18
5 Power Supply Specifications 18
6 Analog Input Specifications 18
7 Analog Output Specifications 18
8 Span and Range Limits for IAP10M and IGP10M 19
9 Span and Range Limits for IDP10M 19
10 Overrange Pressure and Proof Pressure Ratings for IAP10M and IGP10M 19
11 Maximum Static and Proof Pressure Ratings for IDP10M 20
12 Miscellaneous Functional Specifications 20
13 Performance Specifications 20
14 Physical Specifications 21
15 Default Register Reset Values 38
16 Modbus Commands Supported by the Transmitter 42
17 Data Formats Used by Transmitter Modbus Registers 42
18 Control Type Selections 82
19 Reset Sensor Values 97
20 Analog Output 105
21 Communication 105

Important Information

Read these instructions carefully and look at the equipment to become familiar with the device before trying to install, operate, service, or maintain it. The following special messages may appear throughout this manual or on the equipment to warn of potential hazards or to call attention to information that clarifies or simplifies a procedure.

The addition of either symbol to a "Danger" or "Warning" safety label indicates that an electrical hazard exists which will result in personal injury if the instructions are not followed.

This is the safety alert symbol. It is used to alert you to potential personal injury hazards. Obey all safety messages that follow this symbol to avoid possible injury or death.

⚠ DANGER
DANGER indicates a hazardous situation which, if not avoided, **will result in** death or serious injury.

⚠ WARNING
WARNING indicates a hazardous situation which, if not avoided, **could result in** death or serious injury.

⚠ CAUTION
CAUTION indicates a hazardous situation which, if not avoided, **could result in** minor or moderate injury.

NOTICE
NOTICE is used to address practices not related to physical injury.

Please Note

Electrical equipment should be installed, operated, and maintained only by qualified personnel. No responsibility is assumed by Schneider Electric for any consequences arising out of the use of this material.

A qualified person is one who has skills and knowledge related to the construction, installation, and operation of electrical equipment and has received safety training to recognize and avoid the hazards involved.

1. Introduction

Overview

This instruction describes the installation, operation, maintenance, and troubleshooting of the following transmitter models:

- IAP10M Absolute Pressure Transmitter with 1/2" male NPT mounting
- IGP10M Gauge Pressure Transmitter with 1/2" male NPT mounting
- IDP10M Differential Pressure Transmitter with flange body mounting

These transmitters are configured using the 4000 Series Modbus Configurator software. The Configurator supports the configuration, monitoring, and calibration of these transmitters.

Download the 4000 Series Modbus Configurator from the Schneider Electric website, install it, and refer to Chapter 5, “Configuration” and the online help for further assistance.

Before You Begin

⚠ WARNING
EQUIPMENT OPERATION HAZARD
Verify that all installation and setup procedures have been completed.
Before operational tests are performed, remove all blocks or other temporary holding means used for shipment from all component devices.
Remove tools, meters, and debris from equipment.
Do not use this product on machinery lacking effective point-of-operation guarding.
Failure to follow these instructions can result in death or serious injury.

Follow all start-up tests recommended in the equipment documentation. Store all equipment documentation for future reference.

Test all software in both simulated and real environments.

Verify that the completed system is free from all short circuits and grounds, except those grounds installed according to local regulations (for example, according to the National Electrical Code in the US). If high-potential voltage testing is necessary, follow recommendations in equipment documentation to prevent accidental equipment damage.

Before energizing equipment:

- Remove tools, meters, and debris from equipment.
- Close the equipment enclosure door.
- Remove ground from incoming power lines.
- Perform all start-up tests recommended by the manufacturer.

Operation and Adjustments

The following precautions are from the NEMA Standards Publication ICS 7.1 1995 (English version prevails):

- Regardless of the care exercised in the design and manufacture of equipment or in the selection and ratings of components, there are hazards that can be encountered if such equipment is improperly operated.
- It is sometimes possible to misadjust the equipment and thus produce unsatisfactory or unsafe operation. Always use the manufacturer's instructions as a guide for functional adjustments. Personnel who have access to these adjustments should be familiar with the equipment manufacturer's instructions and the machinery used with the electrical equipment.
- Only those operational adjustments actually required by the operator should be accessible to the operator. Access to other controls should be restricted to prevent unauthorized changes in operating characteristics.

⚠ WARNING

UNINTENDED EQUIPMENT OPERATION

The application of this product requires expertise in the design and programming of control systems. Only persons with such expertise should be allowed to program, install, alter and apply this product.

Follow all local and national safety codes and standards.

Failure to follow these instructions can result in death or serious injury.

Acceptable Use

These transmitters are intended for use in monitoring and controlling non-critical equipment only. They are not intended for safety-critical applications.

⚠ WARNING

UNACCEPTABLE USE

Do not use this software as an integral part of a safety system. These devices are not safety products.

Failure to follow these instructions can result in death or serious injury.

⚠ CAUTION

EQUIPMENT OPERATION HAZARD

When devices are used for applications with technical safety requirements, the relevant instructions must be followed.

Use only Schneider Electric software or approved software with Schneider Electric hardware products.

Failure to follow these instructions can result in injury.

Specifications

Schneider Electric Systems USA, Inc. reserves the right to change product specifications. For more information, visit http://www.schneider-electric.com.

Table 1. General Specifications

I/O Terminations	2, 3 and 4 pole, removable terminal blocks 16 to 28 AWG 8A contacts
Relative Humidity	5% to 95%, non-condensing
Temperature	-40°C to 70°C (-40°F to 158°F)

Communication Specifications

Table 2. Serial Communication Specifications

Communication Port COM1	3-position removable terminal block Jumper selectable RS-232 or RS485
RS-232	TxD and RxD implemented RS-232 compatible serial port (CMOS) Functions when COM1 switch is in the right position
RS-485	2-wire half duplex 5100Ω bias resistors Functions when COM1 switch is in the left position
Baud Rates	1200, 2400, 4800, 9600, 19200, 38400
Parity	None
Word Length	8 bits
Stop Bits	1 bit
Transient Protection COM1	2.5kV surge withstand capability per ANSI/IEEE C37.90.1-1989
Isolation	Common ground return connected to negative side of Vin power input
Cable Length	RS-232 -maximum 3 m (10 ft) RS-485 -maximum 1200 m (4000 ft)
Protocols	Modbus RTU
Protocol Modes	Slave

Table 3. LAN Specifications

LAN Compatibility	IEEE 802.3
Termination	10 Base-T (twisted pair), 10M bits/second 4 position removable terminal block Functions when LAN switch is in right position
Network Protocols	IP, ARP, UDP, ICMP
Ethernet Protocols	Modbus UDP and Modbus RTU in UDP
Configuration	Remote over Ethernet
Max Server Connections	20

Table 4. Visual Indicator Specifications

Status LED	Functional status
LAN LED	LAN status

Table 5. Power Supply Specifications

DC Power Input	9V minimum 30V maximum
Power Requirements	60mW at 12V input - RS-232 communication, LAN not enabled, LEDs off 70mW at 12V input - RS-485 communication, LAN not enabled, LEDs off 250mW at 30V input - LAN enabled, LEDs on

Table 6. Analog Input Specifications

Power Input Voltage Monitor	10 bits resolution Accuracy ±1.0V 9-32.768V measurement range 0-32.768V scaling
Isolation	Common ground return connected to negative side of Vin power input

Table 7. Analog Output Specifications

Output Signal Range	0-20mA
Load Resistance Range	550 to 1400 Ω with 30 Vdc supply 250 to 1100 Ω with 24 Vdc supply 0 to 850 Ω with 19 Vdc supply 0 to 500 Ω with 12 Vdc supply 0 to 350 Ω with 9 Vdc supply
	The analog output sinks current. Maximum power dissipation is 384mW. Example: 20mA at 19.2V
Output Type	Single ended regulation on negative side, with positive side of load connected to a positive voltage
Isolation	Common ground return connected to negative side of Vin power input
Resolution	12 bits
Accuracy	Specified from 0.5-20mA ±0.15% of full scale at 25°C (77°F) ±0.25% of full scale over temperature range
Noise and Ripple	0.04% maximum, frequency 0 to 10 kHz
Transient Protection	Transient: 2.5kV surge withstand capability per ANSI/IEEE C37.90.1-1989
Response Time	Less than 10µs for 10% to 90% signal change

Functional Specifications

Span and Range Limits

Table 8. Span and Range Limits for IAP10M and IGP10M

Span Code	Span Limits		Range Limits	
	MPa	psi	MPa	psi
C	0.007 and 0.21	1 and 30	0 and 0.21	0 and 30
D	0.07 and 2.1	10 and 300	0 and 2.1	0 and 300
E	0.7 and 21	100 and 3000	0 and 21	0 and 3000
F (a)	14 tand 42	2000 and 6000	0 and 42	0 and 6000
G (a)	35 and 105	5000 and 15000	0 and 105	0 and 15000

a. Span Codes F and G apply to IGP10M only.

Table 9. Span and Range Limits for IDP10M

Span Code	Span Limits		Range Limits	
	Metric	English	Metric	English
A	0.12 and 7.5 kPa	0.5 and 30 inH_20	-7.5 and +7.5 kPa	-30 and +30 inH_20
B	0.87 and 50 kPa	3.5 and 200 inH_20	-50 and +50 kPa	-200 and +200 inH_20
C	7.00 and 210 kPa	28 and 840 inH_20	-210 and +210 kPa	-840 and +840 inH_20
D	0.07 and 2.1 MPa	10 and 300 psi	-0.21 and +2.1 kPa	-30 and +300 psi
E	0.70 and 21 MPa	100 and 3000 psi	-0.21 and +21 kPa	-30 and +3000 psi

Pressure Ratings

Table 10. Overrange Pressure and Proof Pressure Ratings for IAP10M and IGP10M (a)

Span Code	Maximum Overrange Pressure		Proof Pressure (b)	
	MPa	psi	MPa	psi
C	0.31	45	0.827	120
D	3.1	450	8.27	1200
E	31	4500	79.3	11500
F (c)	59	8400	152	22000
G (c)	137	19500	152	22000

a. Values listed are in absolute or gauge pressure units, as applicable. Maximum overrange pressure is the maximum pressure that can be applied without causing damage to the transmitter.

b. Proof pressure ratings meet ANSI/ISA Standard S82.03-1988. Unit can become nonfunctional after application of proof pressure.

c. Span Codes F and G apply to IGP10M only.

Table 11. Maximum Static and Proof Pressure Ratings for IDP10M

Static Pressure Rating			Proof Pressure Rating		
MPa	psi	bar	MPa	psi	bar
25	3626	250	100	14500	1000

Miscellaneous Functional Specifications

Table 12. Miscellaneous Functional Specifications

Measured and Transmitted Outputs	IAP10M: Absolute pressure IGP10M: Gauge pressure IDP10M: Differential pressure
Adjustable Damping	The transmitter response time is normally 1.0 s, or the electronically adjustable setting of 0.00 (none), 0.50, 1, 2, 4, 8, 16, or 32 seconds, whichever is greater, for a 90% recovery from an 80% input step as defined in ANSI/ISA S51.1
Suppressed Zero and Elevated Zero	Suppressed or elevated zero ranges acceptable as long as span and range limits are not exceeded
Minimum Allowable Pressure	With silicone fill fluid, full vacuum: up to 121°C (250 °F)

Performance Specifications

Zero-based calibrations; stainless steel sensor with silicone fluid; under Reference Operating Conditions unless otherwise specified; URL=Upper Range Limit; Span=Calibrated Span

— NOTE —

Calibrated Span is equal to URL on all transmitters, unless a special order is placed for special calibration over a smaller span.

Table 13. Performance Specifications

Accuracy Includes the effects of linearity, hysteresis, and repeatability.	**IAP10M and IGP10M** Accuracy for spans ≥ 10% URL: ±0.075% of Span Add ± 0.02% for Span Codes E, F, and G Accuracy for spans < 10% URL: ± [0.04 + 0.0035 (URL/Span)]% **IDP10M** Accuracy for spans ≥ 10% URL: ±0.05% of Span Add ±0.05% for Span Code A Add ±0.02% for Span Code E Accuracy for spans <10% URL: Span Code A: ±[(0.002) X (URL/Span) + 0.080]% of Span Span Code B: ±[(0.0032) X (URL/Span) + 0.018]% of Span Span Code C: ±[(0.0046) X (URL/Span) + 0.004]% of Span Span Code D: ±[(0.008) X (URL/Span) + 0.030]% of Span Span Code E: ±[(0.0036) X (URL/Span) + 0.034]% of Span
Stability	Long-term drift less than ±0.05% of URL per year over a 5-year period.
Power-Up Time	12 seconds maximum for transmitter to return the first valid measurement.
Vibration Effect	±0.2% of URL per “g” for vibrations in the range of 5 to 500 Hz; with double amplitudes of 6.3 mm (0.25 in) in the range of 5 to 15 Hz, or accelerations of 3 “g” in the range of 15 to 500 Hz, whichever is smaller
Supply Voltage Effect	Output changes less than 0.005% of span for each 1V change within the specified supply voltage requirements.

Table 13. Performance Specifications

Position Effect	Transmitter can be mounted in any position. Any zero effect caused by mounting position can be removed by re-zeroing. There is no span effect.
Ambient Temperature Effect Total effect for a 28°C (55°F) change within Normal Operating Condition limits for pressure measurements.	**IAP10M and IGP10M** Span Code C: ±(0.08% URL + 0.1% Span) Span Code D: ±(0.08% URL + 0.1% Span) Span Code E: ±(0.08% URL + 0.1% Span) Span Code F: ±(0.08% URL + 0.1% Span) Span Code G: ±(0.08% URL + 0.1% Span) **IDP10M** Span Code A: ±(0.18% URL + 0.025% Span) Span Code B: ±(0.03% URL + 0.060% Span) Span Code C: ±(0.03% URL + 0.060% Span) Span Code D: ±(0.03% URL + 0.060% Span) Span Code E: ±(0.03% URL + 0.060% Span)
Switching and Indirect Lightning Transients	The transmitter can withstand a transient surge up 2000V common mode, or 1000V normal mode, without permanent damage. Output shift is < 1.0%.

Physical Specifications

Table 14. Physical Specifications

Process Cover Material (Process Wetted)	316 ss
Process Cover and Process Connection Gaskets	Glass filled PTFE (Chemloy)
Process Cover Bolts and Nuts	Bolts: ASTM A193, Grade B7 high strength alloy steel Nuts: ASTM A194, Grade 2H high strength alloy steel
Sensor Material (Process Wetted)	316 L ss
Sensor Fill Fluid	Silicone oil
Environmental Protection	Transmitter is dust tight and weather proof per IEC IP66, and provides the environmental and corrosion resistant protection of NEMA Type 4X
Electronics Housing and Housing Covers	Housing has two compartments to separate the electronics from the field connections. The housing and covers are made from low copper, die-cast aluminum alloy with an epoxy finish. Buna-N o-ring seals are used to seal the threaded housing covers, housing neck, and terminal block.
Electrical Connections	Field wiring enters through 1/2" NPT threaded entrances on either side of the electronics housing. Wires terminate in removable terminal blocks for ease of installation and calibration.
Mounting Position	The transmitter can be mounted in any orientation.
Approximate Mass	3.5 kg (7.8 lb) **without** LCD indicator 3.7 kg (8.2 lb) **with** LCD indicator

Approvals and Certifications

Safety	cCSAus Certified Explosionproof Class I, Division 1, Groups B, C and D Hazardous Locations Class I, Division 2, Groups A, B, C and D Hazardous Locations Temperature code T5 at maximum ambient, 70°C Provides non-incendive field circuits for RTD
Emissions (EMC)	FCC Part 15, Subpart B, Class A Verification EN 61000-6-4 Part 6-4: Generic Standards - Emission Standard for Industrial Environments
Immunity (EMC)	EN 61000-6-2 Part 6-2: Generic Standards - Immunity For Industrial Environments

Data Label Marking

The data label includes markings as shown below.

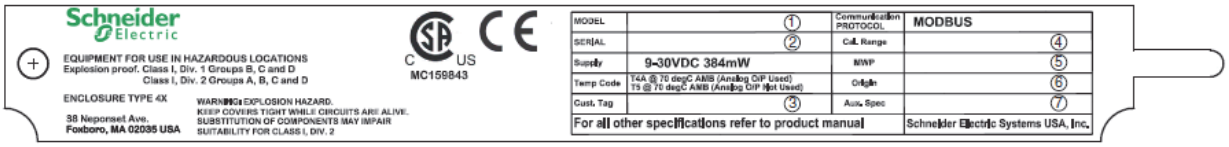

FOR MODELS WITH MWP GREATER THAN 3000 PSI

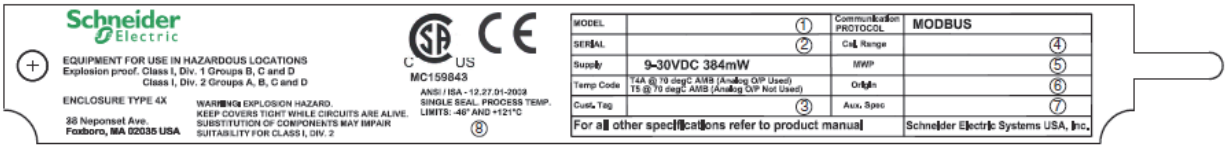

FOR MODELS WITH MWP LESS THAN OR EQUAL TO 3000 PSI

1. MODEL CODE
2. SERIAL NUMBER
3. CUSTOMER TAG INFO.
4. CALIBRATION RANGE PER SALES ORDER
5. MAXIMUM WORKING PRESSURE
6. ORIGIN (DATE: YEAR WEEK) EXAMPLE 2A1704
7. AUX SPEC CODE PER SALES ORDER.
8. MARK AS SHOWN FOR MODELS WITH MWP LESS THAN OR EQUAL TO 3000 PSI.

2. Installation

Transmitter Mounting

Transmitters can be supported by the process piping as shown in Figure 1 and Figure 2, or mounted to a vertical or horizontal pipe or surface using a mounting bracket as shown in Figure 3 and Figure 4.

Mount the transmitter so that any moisture condensing or draining into the field wiring compartment can exit through one of the two threaded conduit connections.

- Use a suitable thread sealant on pipe connections.

NOTICE
POTENTIAL EQUIPMENT DAMAGE To avoid damage to the sensor, do not use any impact devices, such as an impact wrench or stamping device, on the transmitter. **Failure to follow these instructions can result in equipment damage.**

Process-Mounted Transmitter

A transmitter can be mounted to and supported by the process piping as shown in Figure 1 and Figure 2.

Figure 1. Process-Mounted - Flange Mounting

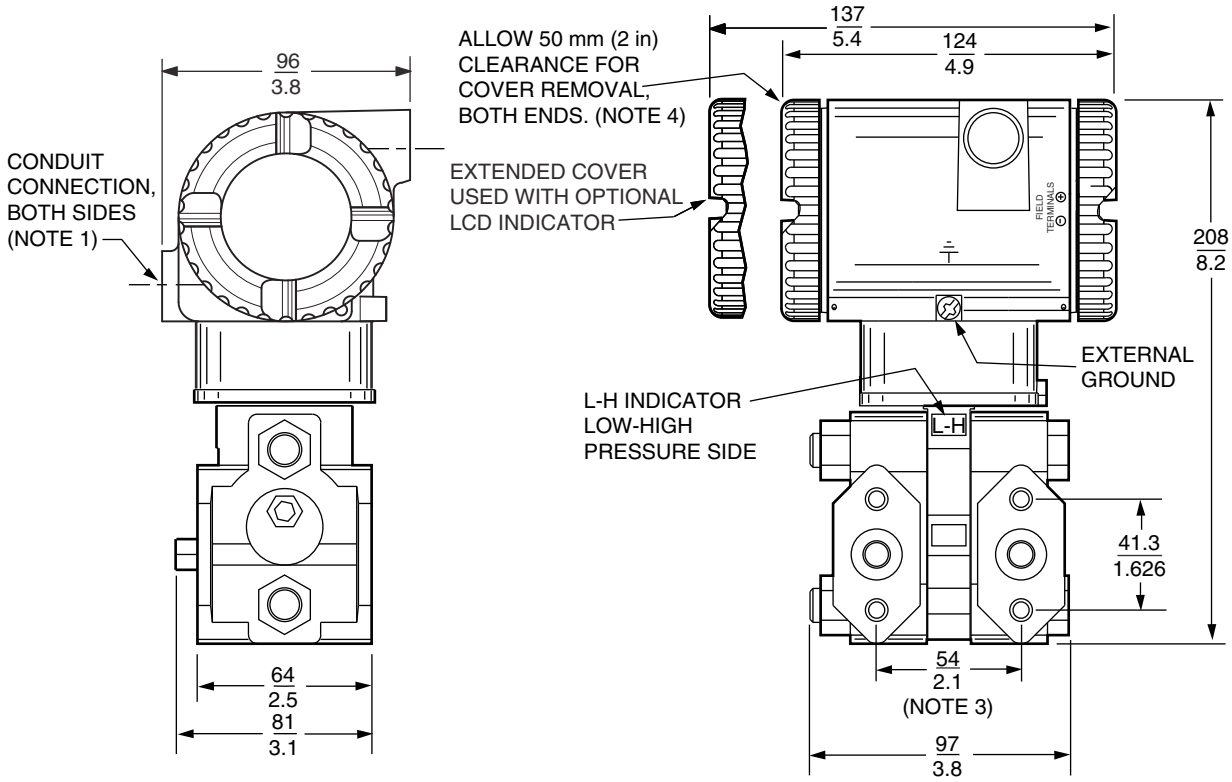

NOTES:
1. CONDUIT CONNECTION 1/2 NPT, BOTH SIDES: PLUG UNUSED CONNECTION WITH METAL PLUG (SUPPLIED).
2. TRANSMITTER MAY BE MOUNTED DIRECTLY ON A MANIFOLD, OR CONNECTIONS MADE DIRECTLY TO PROCESS COVER USING 1/4 NPT INTERNAL THREAD IN PROCESS COVER.
3. CENTER-TO-CENTER DISTANCE BETWEEN HIGH AND LOW PRESSURE CONNECTIONS.
4. TOPWORKS CAN BE ROTATED TO ANY POSITION WITHIN ONE TURN COUNTERCLOCKWISE OF THE FULLY TIGHTENED POSITION.

Figure 2. Process-Mounting - 1/2 NPT Mounting

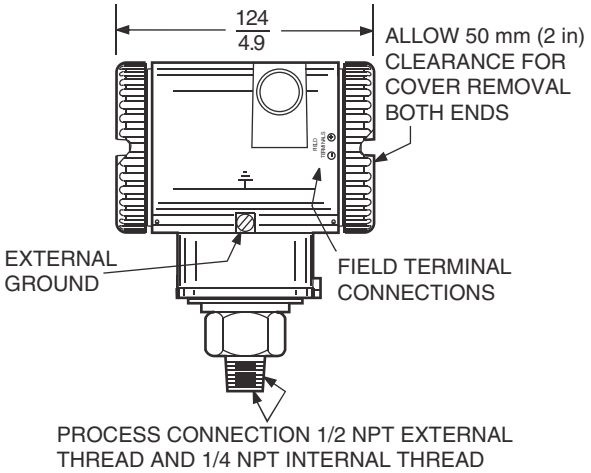

Pipe- or Surface-Mounted Transmitter

To mount a transmitter to a pipe or surface, use a mounting bracket. Referring to Figure 3 and Figure 4, secure the mounting bracket to the transmitter using lock washers and screws. Mount the transmitter with mounting bracket to a vertical or horizontal pipe. To mount to a horizontal pipe, turn the U-bolt 90° from the position shown in Figure 4. The mounting bracket can also be used for wall mounting by securing the bracket to a wall using U-bolt mounting holes.

Figure 3. Mounting Transmitter to a Pipe or Surface - Flange Mounting

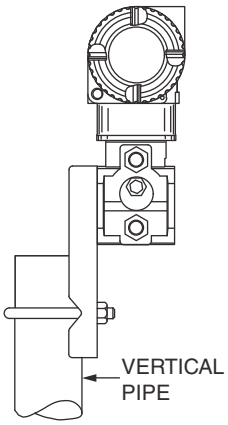

Figure 4. Mounting Transmitter to a Pipe or Surface - 1/2 NPT Mounting

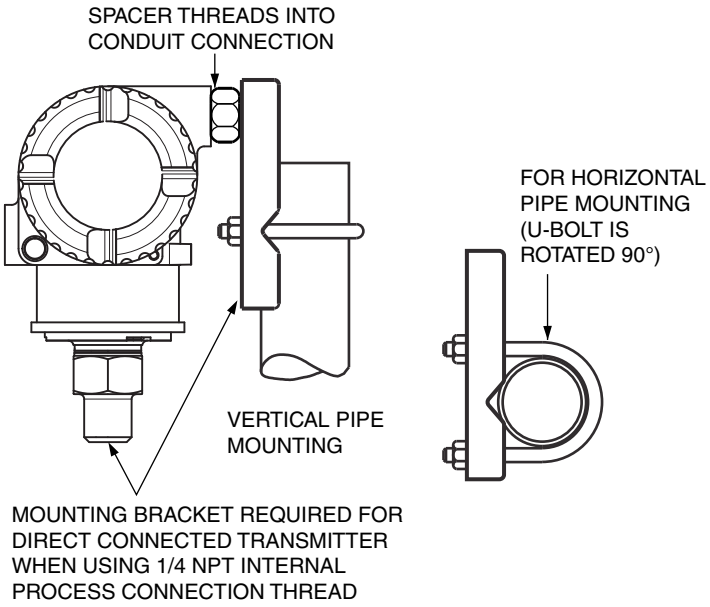

Positioning the Transmitter Housing

The transmitter housing (topworks) can be rotated up to one full turn counterclockwise when viewed from above for optimum access to adjustments, display, or conduit connections.

- Do not rotate the housing more than one turn from the "as received" position. If there is doubt about the housing rotational position, turn fully clockwise and then back off no more than one full turn.
- The small setscrew on the housing keeps the housing from being rotated too far. This is NOT a locking screw. Damage to the housing can occur if this setscrew is removed or tampered with.

Connections for Sensor Calibration

When performing a differential pressure calibration, the bypass valve is closed.

Figure 5. Differential Pressure Calibration Connections

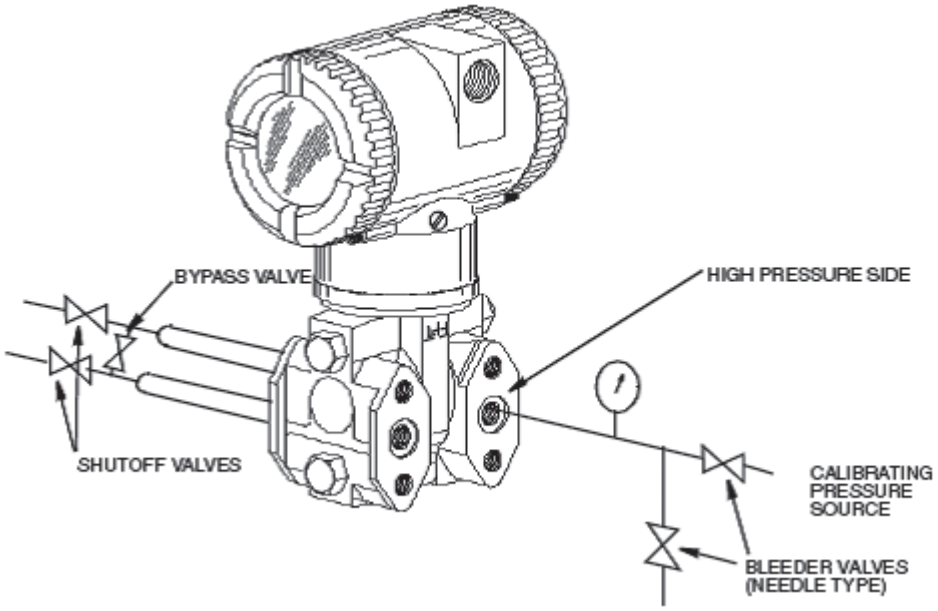

Optional Display Module

The optional display module provides local display of meter run data. The display can be configured using the 4000 Series Modbus Configurator or by Modbus register mapping. The data to display and the interval between the displayed items is user-defined.

Download the configurator from the Schneider Electric website. When installed on your PC, it is found in the Windows > Programs > Schneider Electric > 4000 program group.

Refer to Chapter 5, "Configuration" for additional assistance in configuring your transmitter display. Chapter 4, "Modbus Database" contains information on configuring the display module using Modbus registers.

Adding the Optional Display

To add the optional display, refer to Figure 6 and proceed as follows:

1. Turn off the transmitter power source.
2. Remove the electronics compartment cover by rotating it counterclockwise. Screw in the cover lock if applicable.
3. Plug the display into the receptacle at the top of the electronics assembly.
4. Seat the o-ring in its groove in the display housing. Then insert the display into the electronics compartment by grasping the two tabs on the display and rotating it approximately 10° in a clockwise direction.
5. Install the new, windowed cover onto the housing by rotating it clockwise until the o-ring contacts the housing; then continue to hand-tighten it as much as possible (at least 1/4 turn). If cover locks are present, align the serration in the cover with the lock, and unscrew the lock until it extends into the cover serration.
6. Turn on the transmitter power source.

Figure 6. Optional Display and Write Protect Jumper

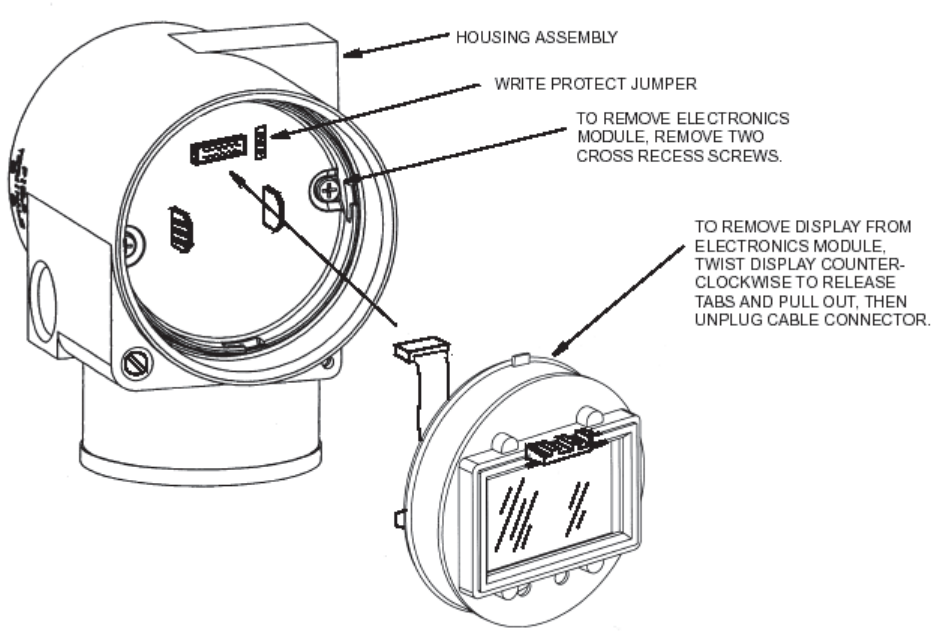

Rotating the Optional Display

The optional display can be rotated within the housing to any of four positions at 90° increments.

1. Grasp the two tabs on the display and rotate it about 10° in a counterclockwise direction.
2. Pull out the display.
3. Fully seat the o-ring in its groove in the display housing.
4. Turn the display to the desired position.
5. Reinsert the display in the electronics module, aligning the tabs on the sides of the assembly, and twist it in the clockwise direction.

Write Protect Jumper

The write protect jumper is located to the right of the display connector as shown in Figure 6. The jumper connects two of the three pins on the write protect header.

- Connecting the top two pins with the jumper disables the write protection.
- Connecting the bottom two pins with the jumper enables the write protection.

See Chapter 4, "Modbus Database" for details.

Figure 7. Write Protect Jumper Positions

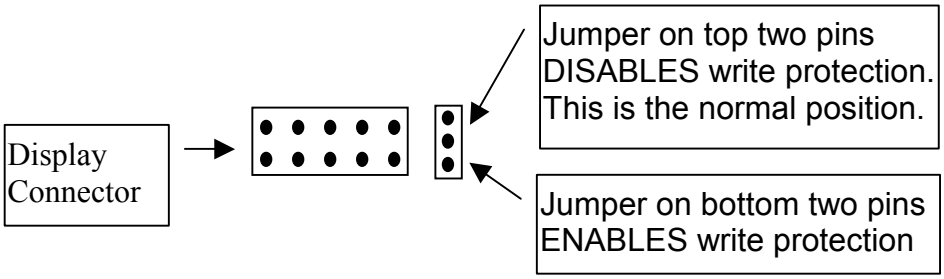

Transmitter Field Wiring

The installation and wiring of an IAP10M, IGP10M, or IDP10M transmitter must conform to local code requirements.

NOTE

In North America, a seal is not required when installed with rigid conduit per requirements of the applicable electrical code. When using instrument cable approved for the hazardous location, a seal must be made with an approved cable gland or conduit seal per the requirements of the applicable electrical code.

For access to the field terminals, thread the cover lock (if present) into the housing to clear the threaded cover and remove the cover from the field terminals compartment as shown in Figure 8. The embossed letters **FIELD TERMINALS** identify the compartment.

Figure 8. Accessing Field Terminals

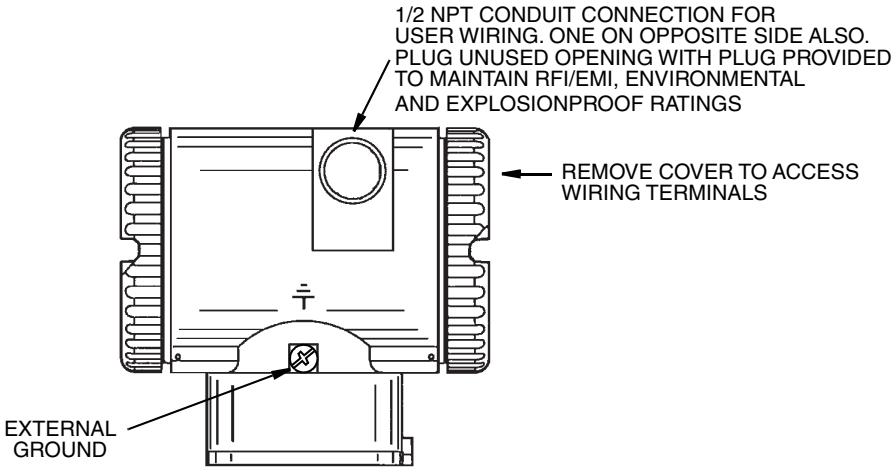

The transmitter uses screw termination style connectors for termination of field wiring. These connectors accommodate solid or stranded wires from 16 to 28 AWG. The connectors are removable for field service and replacement purposes. Leave enough slack in the field wiring for the connector to be removed.

The use of transient/surge protection is recommended in installations prone to high levels of electrical transients and surges.

⚠ DANGER

HAZARD OF ELECTRIC SHOCK, EXPLOSION, OR ARC FLASH

Remove power before servicing the unit.

Failure to follow these instructions will result in death or serious injury.

The threaded end cap with the terminal board wiring diagram must be installed on the housing end that has the terminal board. This is a Class 1, Division 2 Hazardous Locations requirement.

Terminal Board Layout

The transmitter has terminal connections for input power, serial, analog output, and Ethernet connections. See Figure 9. The spare fuse is indicated with an asterisk.

Figure 9. Terminal Board Layout

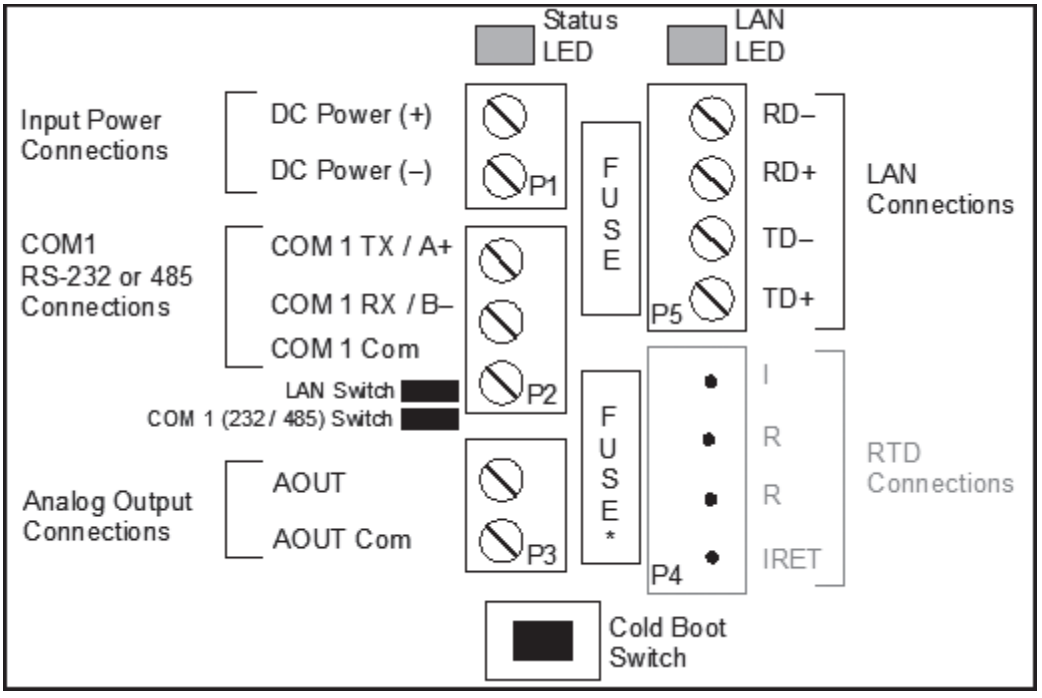

Power Supply

The transmitter is powered from a 9 to 30Vdc input power source.

Input power is applied to the +PWR and -PWR terminals on connector P1.

Refer to Chapter 1, "Introduction" for the minimum and maximum operating voltages and input power requirements.

When the input voltage is below the minimum recommended voltage, the transmitter turns off.

Figure 10. Input Power Wiring

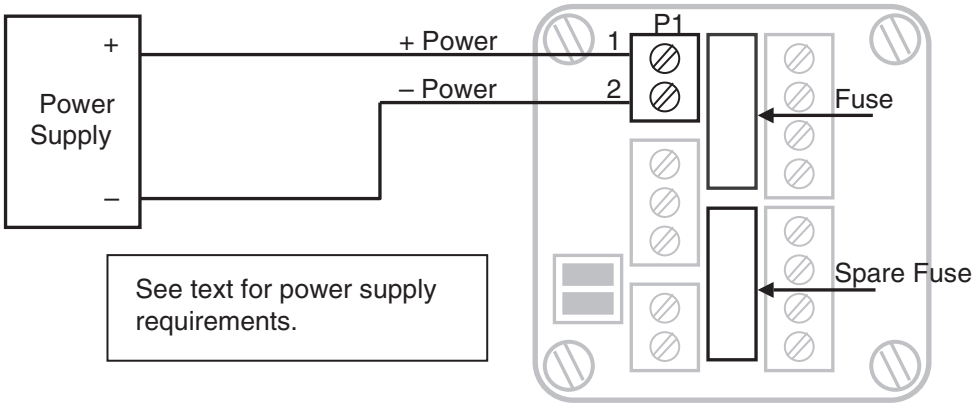

Fusing

The transmitter power supply inputs are fused on the terminal board. The fuse is located between connectors P1 and P5. Remove these connectors to have access to the fuse. The replacement fuse is a Littelfuse R452.500. Littelfuse R452.500 is available from Schneider Electric in a kit comprising 10 fuses; part number of the fuse kit is TBUM297308.

A spare fuse is located between P3 and P4.

System Grounding

The transmitter circuitry is electrically isolated from the housing for voltages up to 550Vac. Terminal board connections labeled COM on connectors P2, P3, and P5 are tied together and connected to -PWR on the input power terminal block P1. The serial communication ports, analog output, and input power share the same electrical common.

Analog Output

The transmitter has a single 0-20mA current sinking analog output. The analog output is either associated with the built-in PID controller, or can be used as a general purpose analog output. The analog output accepts standard signed 16-bit integer output values. Valid values are -8192 to 32767, which represent 0 to 20mA output. A value of 0 represents 4mA.

When a sinking analog output is wired to an external device, the operating characteristics of the analog output are considered. As shown in Figure 11, the LOAD does not connect to ground at any point. The LOAD must be able to float above ground in order for the analog output to function. The analog output must be connected to a differential input device.

For example, in Figure 11, points A and B are each at a positive voltage based on the sinking current output, the LOAD resistance, and the power supply voltage.

For a sinking current of 0 mA, a LOAD resistance of 250 ohms, and a power supply voltage of 24Vdc, the voltage at both points A and B is 24Vdc.

For a sinking current of 20 mA, a LOAD resistance of 250 ohms and a power supply voltage of 24Vdc the voltage at point A is 24Vdc and the voltage at point B is 24Vdc minus 5Vdc (20 mA x 250 ohms) or 19Vdc.

The LOAD cannot be connected to ground in any wiring configuration for the analog output.

Figure 11. Analog Output Wiring

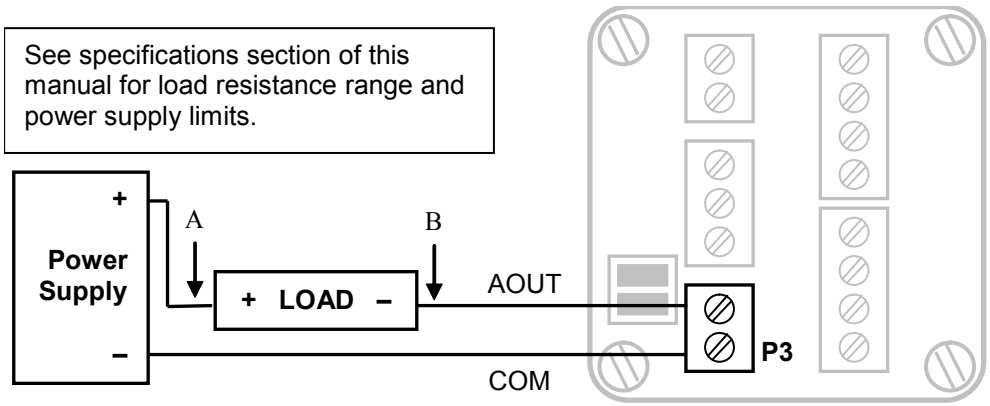

When the PID control is operating, the analog output is the output of the PID controller. The value of the output is scaled so that a value of 0 means that the PID controller output is at the zero-scale limit. A value of 32767 means that the PID controller output is at the full-scale limit.

When the PID controller is not operating, the analog output can be controlled by writing an appropriate value to Modbus register 40468. Valid values are -8192 to 32767, which correspond to 0 to 20mA output. A value of 0 corresponds to 4mA.

Configure the PID controller by using Modbus registers (see Chapter 4, “Modbus Database”), or by using the 4000 Series Modbus Configurator software (see Chapter 5, “Configuration”).

Current Output

The analog output is a sinking output that is not ground referenced. The load connects between connector P3 terminal 1 and a positive power supply as shown in Figure 11. Refer to Chapter 1, “Introduction” for power supply limits and load resistance ranges.

Analog Output Data Format

The analog output has a 12-bit, unipolar, digital to analog converter. The table below shows the output current for several D/A values. Positive data outputs current in the range of 4 to 20mA. Negative data outputs current below 4mA. The resolution of the analog output is approximately 5µA.

D/A Value	Current
-8192	0 mA
0	4.000 mA
11	4.005 mA
8192	8.000 mA
16384	12.000 mA
24576	16.000 mA
32767	19.995 mA

Internal Analog Input

The transmitter provides one analog input point. The input monitors the supply voltage.

The analog input returns standard signed 16-bit integer values. Valid values are 0 to 32767, corresponding to 0 to 32.767 volts. The input value is scaled to represent the voltage in millivolts.

The internal analog input is mapped to Modbus register 40397.

Serial Communication Port (COM1)

The transmitter is equipped with a single serial communication port for interface to a PC running the 4000 Series Modbus Configurator software. The serial communication port supports RS-232 serial communication and 2-wire RS-485 serial communication.

- The user serial port on the transmitter controller is designated COM1. Connections to COM1 are made using a removable three-position terminal block labeled P2.
- The serial port is configured as Modbus RTU protocol, 8 data bits, no parity and 1 stop bit. The baud rates supported are 1200, 2400, 4800, 9600, 19200, and 38400. The default value is 9600.
- Modbus addresses from 1 to 255 in standard Modbus mode, and 1 to 65534 in extended address mode are supported.
- See Chapter 4, “Modbus Database” for information on using Modbus registers to configure the serial port.
- Refer to Chapter 5, “Configuration” for information on using the 4000 Series Modbus Configurator software to configure the serial port.

RS-232 Serial Communication Port

COM1 is capable of RS-232 operation. Select RS-232 operation by sliding the COM1 switch to the RS-232 (right) position on the terminal board. RS-232 operation uses RxD, TxD, and COM signals. Refer to Figure 12 for connector wiring descriptions.

- The low power transmitters used in COM1 generate 0 to 5V levels. This is less than the RS-232 specification, but is still compatible with all RS-232 receivers. Limit cables to a maximum of 3m (10 ft).
- Use shielded cable to isolate the signals from electromagnetic noise and to comply with FCC and CE regulatory requirements. The shield is connected to ground at one end only.

Figure 12. COM1 RS-232 Wiring Example

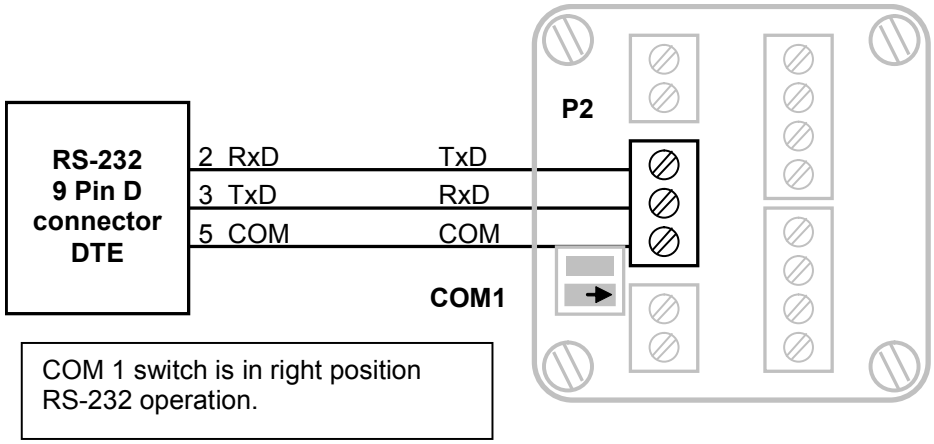

RS-485 Serial Communication Port

COM1 is also capable of 2-wire RS-485 operation. Select RS-485 operation by sliding the COM1 switch to the RS-485 (left) position on the terminal board. RS-485 operation uses A+ and B- signals. Refer to Figure 13 for connector wiring descriptions.

RS-485 uses balanced differential signals. Proper RS-485 operation requires that devices communicating on the signal pair be referenced to the same point. In the transmitter, the devices connected to the power input and I/O establish this reference point. The negative side of the incoming power (-PWR on P1-1) normally establishes the reference point.

The RS-485 serial communication ports transmit and receive differential voltages to other RS-485 devices on a network. The RS-485 specification allows a maximum of 32 devices connected on a single RS-485 network. The specification for RS-485 recommends that the cable length should not exceed a maximum of 1200m (4000 ft). Termination resistors are required when using long cable lengths and high baud rates. Refer to “RS-485 Termination Resistors” for information on termination resistors.

The signal grounds of the RS-485 devices in the network are not connected together, but instead are referenced to their respective incoming electrical grounds. The grounds of the RS-485 devices on the network must be within several volts of each other.

Use shielded cable to isolate the signals from electromagnetic noise and to comply with FCC and CE regulatory requirement. The shield is connected to ground at one end only.

Figure 13. COM1 RS-485 Wiring Example

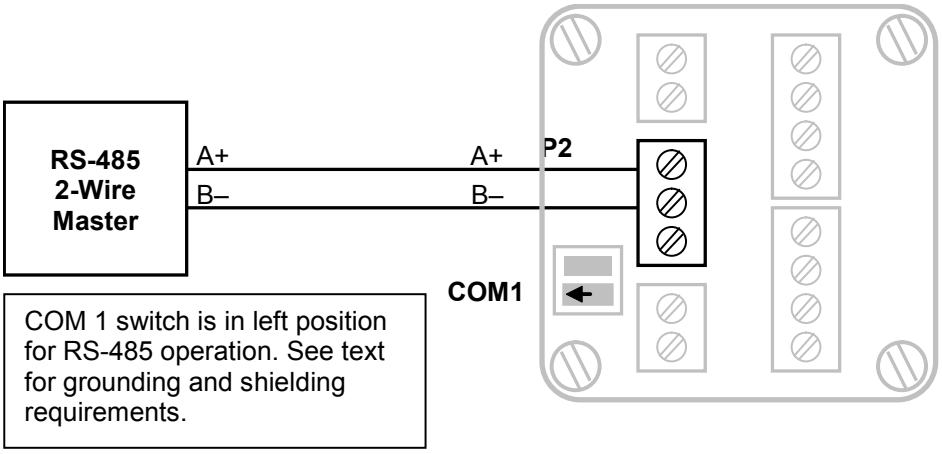

RS-485 Bias Resistors

The RS-485 receiver inputs on the transmitter are such that received data is driven to a valid state (space) when there are no active drivers on the network. The value of these bias resistors is 5100 ohms from ground to the B- input, and 5100 ohms from +5V to the A+ input.

RS-485 Termination Resistors

Termination resistors are required in long networks operating at the highest baud rates. Shorter networks in high electromagnetic noise environments may also benefit from terminations. Networks as long 300m (1000 ft) operating at 9600 baud will function without termination resistors. Terminations should be considered if the baud rate is higher and the network is longer.

When termination resistors are required, they are installed on the first and last station on the RS-485 wire pair. The other stations should not have termination resistors.

RS-485 networks are generally terminated with 120 ohm resistors on each end. The required 120 ohm resistor is supplied and installed by the user. When using termination resistors, it is necessary to increase the line biasing by adding lower value bias resistors in order to generate at least 0.2V across RS-485 line. The suggested value of the bias resistors is 470 ohms. Install one bias resistor from the RS-485 line B- to COM. Install the second bias resistor from the RS-485 line A+ to +5V. +5V is not available on the transmitter, but may be available on another device on the RS-485 network.

LAN Communication Port

The transmitter has a LAN port for communicating on a local area network. The LAN port provides an interface to a PC running the 4000 Series Modbus Configurator software.

Configure the LAN port using the 4000 Series Modbus Configurator. See Chapter 5, "Configuration" for details. Parameters that are configured include:

- The IP address, subnet mask, and gateway address.
- The UDP protocol to use, Modbus/UDP or Modbus RTU in UDP, and the listening port number.
- The Modbus address for the LAN port.
- The Friendly IP List for secure access to the transmitter.

LAN Wiring

The transmitter is wired directly to standard RJ-45 Category 5 cables using the four pin terminal labeled P5. These cables consist of four twisted pairs. Only the green and orange pairs are used. There is no standard for which color is used for the RD pair or the TD pair. The transmitter TD pair to the host RD pair and the transmitter RD pair to the host TD pair when connecting to PCs and hubs.

The LAN switch is set to the **right** position when the LAN port is used. The LAN switch must be in the **right** position when power is applied to the transmitter for the LAN port to work.

Connection to switches that are MDI/MDIX Auto crossover compatible, such as the Schneider Electric Model 5910 Ethernet Switch, allow wiring to either of the data pairs as shown in Figure 14. Ethernet switches are available from Schneider Electric as part numbers TBUX297288 and TBUS297289.

Figure 14. Ethernet Wiring

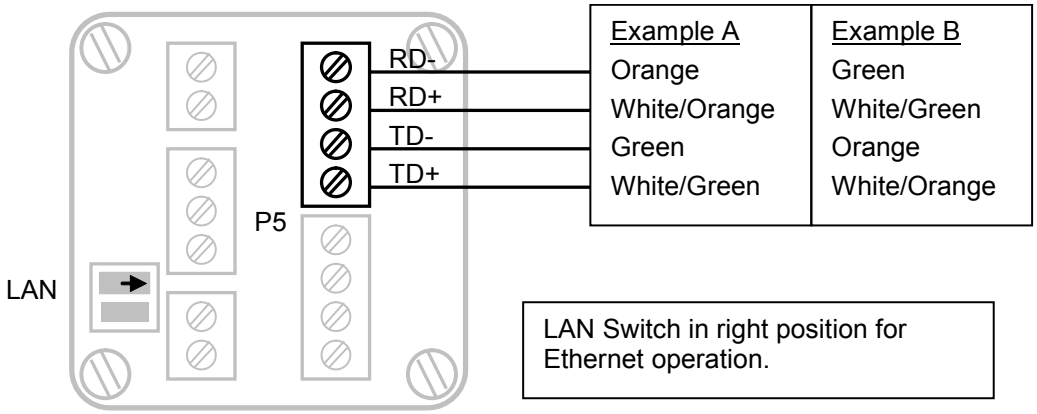

Connecting Directly to a PC

When connecting the transmitter directly to a PC, the transmitter TD wire pair connects to the PC RD pair. The transmitter RD wire pair connects to the PC TD pair. Observe the polarity. The white/stripped wires are (+), while the solid wires are (-). Refer to Figure 15.

Figure 15. RJ-45 Connection to PC

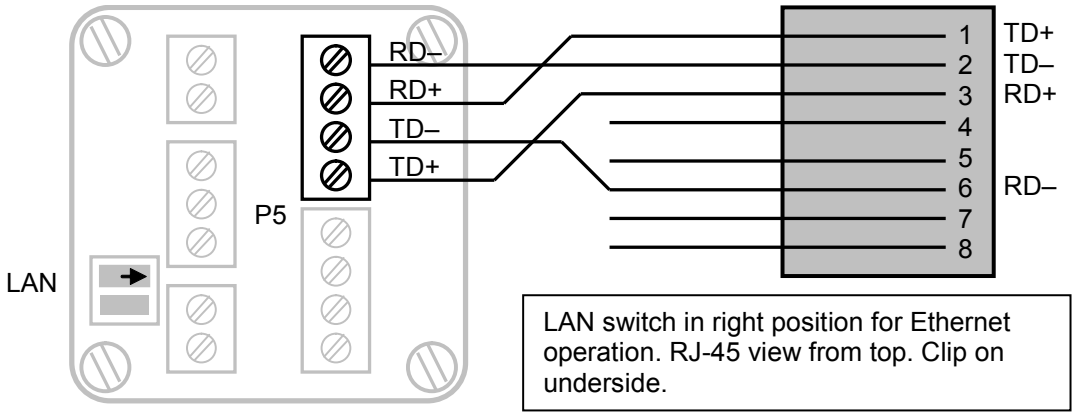

Connecting to a Hub or Switch

When connecting the transmitter to a hub, the transmitter TD wire pair connects to the hub or switch RD pair. The transmitter RD wire pair connects to the hub or switch TD pair. Observe the polarity. The white/stripped wires are (+), while the solid wires are (-). Refer to Figure 16.

Figure 16. Connection to Hub or Switch

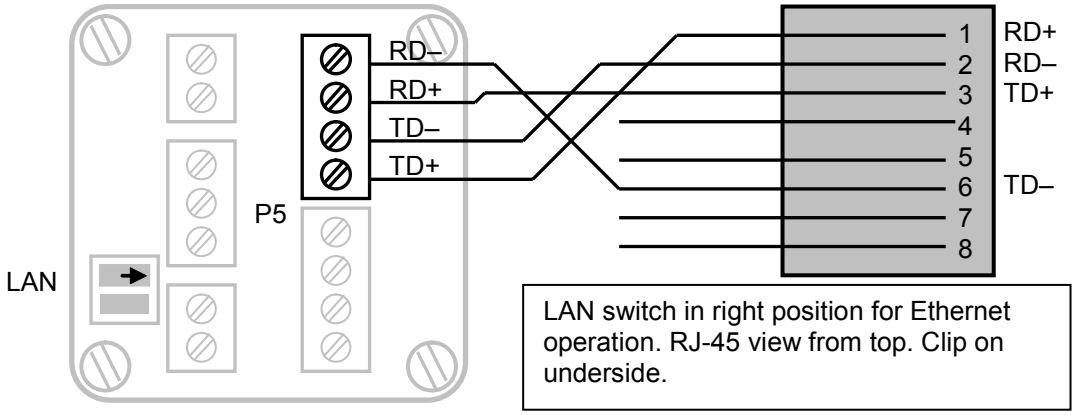

Ethernet Wiring Recommendations

- 10BaseT has a maximum length of 100 m (350 feet). Wiring practices and electrical noise and interference may limit the practical distance to less than this.
- No more than 1/2" of the Ethernet cable should be untwisted, or it will be susceptible to crosstalk.
- Ethernet cables are generally not shielded. Shielded “industrial Ethernet” cable, such as Data Tuff® from Belden, is available for use in noisy environments.
- Pairs are used together. Do not use wires that are not paired.

3. Operation

Operating Modes

The transmitter can start up in Run, Service, Sensor or Cold Boot mode.

Run Boot

A Run Boot occurs if the Cold Boot switch is not pressed at reset. A run boot installs the Modbus driver on COM1. User-defined settings are read from EEPROM and used.

Service Boot

A Service Boot occurs when the Cold Boot switch is pressed at reset and remains pressed for between 3 and 15 seconds. The Status LED lights steadily after 3 seconds to indicate that Service Boot mode is selected.

A Service Boot installs the Modbus driver on COM1 and the sensor driver on COM2. Default communication settings are used. The COM2 serial port operates at 4800 baud, no parity, 8 data bits, and one stop bit.

Sensor Diagnostic Boot

A Sensor Diagnostic Boot occurs when the Cold Boot switch is pressed at reset and remains pressed for between 15 and 30 seconds. The Status LED blinks rapidly after 15 seconds to indicate that the Sensor Diagnostic Boot mode is selected.

A Sensor Diagnostic Boot allows direct communication with the sensor electronics. The COM1 serial port operates at 4800 baud, no parity, 8 data bits, and one stop bit.

No other transmitter features are available. This mode is provided to allow use of sensor applications and tools that communicate directly with the sensor electronics.

Status LED bit 2 indicates that the transmitter is in the Sensor Diagnostic mode. The other status bits are off. The Status LED will blink short-short-long while the transmitter is in the Sensor Diagnostic mode.

The Sensor Diagnostic Boot remains in effect until the transmitter is reset.

Cold Boot

A cold boot occurs when the Cold Boot switch is pressed at reset and remains pressed for more than 30 seconds. The Status LED blinks slowly after 30 seconds to indicate that the cold boot mode is selected.

A cold boot initializes the transmitter to its default state:

- COM1 serial port operates at 9600 baud, no parity, 8 data bits, 1 stop bit, and uses the Modbus/RTU protocol.
- COM2 serial port operates at 4800 baud, no parity, 8 data bits, and one stop bit.
- Station number is set to station 99 using standard addressing mode.
- IP address is set to 0.0.0.0, with a subnet mask of 255.255.255.0, and a gateway of 0.0.0.0.
- UDP protocol is set to Modbus/UDP and is set to use port 502.
- The friendly IP list is disabled and cleared.

The table below shows the registers that are reset and their default values.

Table 15. Default Register Reset Values

Primary Register	Alternate Register	Type	Value	Parameter
40015	None	Integer	8	Baud Rate (9600 baud)
40016	None	Integer	1	Station Number
40032 - 40035	30032 - 30035	ASCII	0	Tag Name (8 chars)
40036 - 40043	30036 - 30043	ASCII	0	Description (16 chars)
40044 - 40059	30044 - 30059	ASCII	0	Message (32 chars)
40126	None	Integer	4000	Display Scan Interval
40128	None	Integer	0	Display Control
40131	30131	Integer	0	Response Delay Time
40315	None	Integer	0	Display Valid Time
40398	None	Integer	0	Analog Output
40451	None	Integer	0	PID Controller Enable
40452 - 40453	None	Floating point	0.0	Set Point
40454 - 40455	None	Floating point	0.0	Gain
40456 - 40457	None	Floating point	0.0	Reset Time
40458 - 40459	None	Floating point	0.0	Rate Time
40460 - 40461	None	Floating point	0.0	Deadband
40462 - 40463	None	Floating point	32767.0	Full Scale Limit
40464 - 40465	None	Floating point	0.0	Zero Scale Limit
40466 - 40467	None	Floating point	1.0	Cycle Time
40468	None	Integer	0	Manual Output
40470	None	Integer	0	PID Operating Mode
40471 - 40472	None	Floating point	0.0	User Defined Process Value

A Cold Boot does not reset the measurement parameters. See register 40205 in Chapter 4, “Modbus Database” for information on resetting measurement parameters.

LAN LED

The LAN LED is on when power is applied to the transmitter and there is activity on the LAN. The LAN LED is powered down after five minutes. Press the Cold Boot switch to restart the timer.

Status LED

The Status LED is on when power is applied to the transmitter. The Status LED is used to indicate the boot mode of the transmitter when the Cold Boot switch is pressed. The Status LED is powered down after five minutes. Press the Cold Boot switch to restart the timer.

Cold Boot Switch

The Cold Boot switch is used to start the transmitter in one of four boot modes: Run, Service, Sensor Diagnostic, and Cold Boot.

4. Modbus Database

This chapter describes Modbus protocols used to communicate with the transmitter, and the parameters that are assigned to Modbus registers.

The Modbus registers are listed and described in two sections. First, “Modbus Registers by Category” lists some of the Modbus registers in groups of related items, such as “Process Variables” or “Transmitter and Sensor.” This is followed by “Modbus Register Database”, which is a complete sequential listing of the registers.

Modbus Communication Overview

The implementation of Modbus on these transmitters is based on the document PI-MBUS-300 Rev B, *Gould Modbus Protocol Reference Guide*, from modbus.org.

Modbus Protocols

- **Modbus RTU** is a serial protocol that can be used in point to point or multidrop serial networks.
- **Modbus/UDP** communication mode is an extension of serial Modbus that defines how Modbus messages are encoded within and transported over UDP/IP-based networks. The **Modbus/UDP** protocol uses a custom Modbus protocol layer on top of the UDP protocol.

  Its request and response messages are prefixed by six bytes. These six bytes consist of three fields: transaction ID field, protocol ID field, and length field. The encapsulated Modbus message has exactly the same layout and meaning, from the function code to the end of the data portion, as other Modbus messages.

  The Modbus CRC-16 and LRC check fields are not used in **Modbus/UDP**. Instead, the UDP/IP and link layer (e.g., Ethernet) checksum mechanisms are used to verify accurate delivery of the packet.
- **Modbus RTU in UDP** message format is similar to that of the **Modbus RTU** protocol, but **Modbus RTU in UDP** protocol communicates with a controller through the Internet. The **Modbus RTU in UDP** message format does not include a six-byte header prefix, as in the **Modbus/UDP** mode, but does include the Modbus CRC-16 and LRC check fields. The Modbus RTU in UDP message format supports the **Modbus RTU** message format.

Modbus Function Codes

Table 16. Modbus Commands Supported by the Transmitter

Function Code	Description	Comments
03	Read Holding Registers	Reads the contents of a register in the 4xxxx register address range (Holding Registers).
04	Read Input Registers	Reads the contents of a register in the 3xxxx register address range (Input Registers).
06	Preset Single Holding Register	Writes data to a single register in the 4xxxx register address range.
16	Preset Multiple Registers	Writes data to several holding registers in a contiguous block of 4xxxx register addresses.

Modbus Station Addressing

These transmitters support standard or extended Modbus addressing:

- Standard addressing allows 255 stations and is compatible with standard Modbus devices.
- Extended addressing allows 65534 stations, with stations 1 to 254 compatible with standard Modbus devices.

Data Formats

Table 17. Data Formats Used by Transmitter Modbus Registers

<table>
<tr><th>Data Type</th><th>Registers Required</th><th>Description</th></tr>
<tr><td>Integer</td><td>1</td><td>Unsigned integer in the range 0 to 65535.</td></tr>
<tr><td>Float</td><td>2</td><td>Floating-point numbers are in the IEEE 754 format. Numbers are made up of one sign bit (S), eight exponent bits (E), and 23 mantissa bits (M). A number consists of 4 bytes as shown below:
<table>
<tr><th>Byte A</th><th>Byte B</th><th>Byte C</th><th>Byte D</th></tr>
<tr><td>SEEE EEEE</td><td>EMMM MMMM</td><td>MMMM MMMM</td><td>MMMM MMMM</td></tr>
</table>
Floating-point values are stored in two consecutive registers. Both registers must be read or written in the same Modbus command.</td></tr>
<tr><td>ASCII</td><td>1</td><td>Two characters are stored in each register. Valid values are any ASCII character. The first character is in the low order byte, the second in the high order byte. The string is terminated with a NULL (= 0) character if it is less than 8 characters. Set the first register to 0 to indicate a NULL (empty) string.</td></tr>
</table>

Write Protecting the Modbus Database

The transmitter can be write protected by installing the write-protect jumper. See Figure 6 for the location of the write protection jumper.

- When the write-protect jumper is installed, registers 40001 to 40499 are read-only.
- When the write-protect jumper is not installed, the read/write ability is as described in the “Modbus Register Database” section.

Modbus Registers by Category

This section describes some of the transmitter parameters that are assigned to Modbus registers. The registers are divided into categories for ease of reference. See the "Modbus Register Database" section for a complete listing of transmitter Modbus registers.

The registers may be read-only or read and write. The Read/Write column in the tables indicates the register type:

- Read Only indicates that the register is read-only.
- Read/Write indicates the register can be read or written to.

Process Variables

Primary Variable Value

Register(s) 40401 - 40402 (30401 - 30402) Read Only

These registers hold the primary variable as a floating-point number in the specified floating-point format.

- Static pressure for IAP10M or IGP10M
- Differential pressure for IDP10M

Register(s) 40116 Read Only

This register holds the primary variable as an integer number. The diagnostic bits indicate the validity of this register. The data in this register is equivalent to register 40401 and 40402 rounded to the nearest integer.

- Static pressure for IAP10M and IGP10M
- Differential pressure for IDP10M

Secondary Variable Value

Register(s) 40403 - 40404 (30403 - 30404) Read Only

These registers hold the secondary variable as a floating-point number in the specified floating-point format. The diagnostic bits indicate the validity of this register.

- None for IAP10M, IGP10M, and IDP10M

Register(s) 40117 Read Only

This register holds the secondary variable as an integer number. The diagnostic bits indicate the validity of this register. The data in this register is equivalent to register 40403 and 40404 rounded to the nearest integer.

- None for IAP10M, IGP10M, and IDP10M

Tertiary Variable Value

Register(s) 40405 - 40406 (30405 - 30406) Read Only

These registers hold the tertiary variable as a floating-point number in the specified floating-point format.

- None for IAP10M, IGP10M, and IDP10M

Register(s) 40118 Read Only

This register holds the tertiary variable as an integer number. The diagnostic bits indicate the validity of this register. The data in this register is equivalent to register 40405 and 40406 rounded to the nearest integer.

- None for IAP10M, IGP10M, and IDP10M

Process Variable Integer Register Mode

Register(s) 40119 Read / Write

This register controls if negative values are allowed in registers 40116 to 40118. Valid values are 0 and 1. The default value is 0.

0 = allow negative numbers

1 = assign zero if the value is less than zero

Primary Variable Units

Register(s) 40060 (30060) Read/Write

This register holds a value representing the engineering units for the primary variable. The primary variable is differential pressure for the IDP10M. The primary variable is static pressure for the IAP10M and IGP10M. The units cannot be changed unless the transmitter is in offline mode. Refer to register 40206 for the transmitter mode state.

2 = Pa
3 = kPa
4 = MPa
5 = psi
6 = inches of water at 68F
7 = ftH2O
8 = atm
9 = bar
10 = kg/cm2
11 = g/cm2
12 = cmHg
13 = mmHg
14 = torr
15 = not applicable
16 = cmH2O
17 = mmH2O
18 = inHg
19 = mbar
30 = dy/cm2

Secondary Variable Units

Register(s) 40061 (30061) Read/Write

This register is not implemented.

Tertiary Variable Units

Register(s) 40062 (30062) Read/Write

This register is not implemented.

Transmitter and Sensor

Manufacturer's Code

Register(s) 40001 (30001) Read Only

This register holds a constant value of 4000. This indicates that the transmitter is manufactured by Schneider Electric Systems USA, Inc.

Type Code

Register(s) 40002 (30002) Read Only

This register holds a value, type code, which indicates the model of the transmitter.

Software Revision Level

Register(s) 40003 (30003) Read Only

This register holds the revision number of the transmitter firmware.

Sensor Software Version Level

Register(s) 40004 (30004) Read Only

This register holds the version number of the sensor firmware. This is read from the sensor. It uses the format: MAJOR_VERSION * 100 + MINOR_VERSION. For example, “1.19” would be viewed as “119” in register 40004.

Transmitter Manufacture Date

Register(s) 40007 (30007) Read Only

Register 40007 holds the manufacture date as bits in the format YYYYYYYMMMMDDDDD.

- YYYYYYY is the number of years since 1986. Add this number to 1986 to obtain the year of manufacture.
- MMMM is the month of manufacture.
- DDDDD is the day of manufacture

Transmitter Core Number

Register(s) 40008 (30008) Read Only

Register 40008 holds the core number. This is a number set when the sensor core is manufactured.

Sensor Hardware Version

Register(s) 40009 (30009) Read Only

This register holds the version number of the sensor hardware. This is read from the sensor.

Modbus Revision

Register(s) 40010 (30010) Read Only

This register holds the Modbus mapping and protocol revision. It is fixed at 1.

Sensor Type

Register(s) 40011 (30011) Read/Write

This register is not implemented.

Tag Name (8 characters)

Register(s) 40032 - 40035 (30032 - 30035) Read/Write

These registers hold the transmitter tag name. The tag name can be up to 8 characters. Two characters are stored in each register. Valid values are any ASCII character.

Description (16 characters)

Register(s) 40036 - 40043 (30036 - 30043) Read/Write

These registers hold the transmitter description. The description can be up to 16 characters. Two characters are stored in each register. Valid values are any ASCII character.

Message (32 characters)

Register(s) 40044 - 40059 (30044 - 30059) Read/Write

These registers hold the transmitter message. The message can be up to 32 characters. Two characters are stored in each register. Valid values are any ASCII character.

Communications

Baud Rate

Register(s) 40015 Read/Write

This register holds the transmitter serial port baud rate. When this register changes, it updates the serial port settings.

5 = 1200
6 = 2400
7 = 4800
8 = 9600 (default)
9 = 19200
10 = 38400

Transmitter Address

Register(s) 40016 Read/Write

This register holds the transmitter Modbus address for the serial port and LAN port.

Response Delay Time

Register(s) 40131 (30131) Read/Write

This register sets serial port response delay. The register specifies the delay from the normal response time. Valid values are 0 to 65535 milliseconds. The default value is 0 milliseconds.

COM1 Framing Errors

Register(s) 40145 (30145) Read Only

This register holds the number of framing errors on COM1. This register is cleared when the controller is reset.

COM1 Parity Errors

Register(s) 40146 (30146) Read Only

This register holds the number of parity errors on COM1. This register is cleared when the controller is reset.

COM1 Overrun Errors

Register(s) 40147 (30147) Read Only

This register holds the number of character-overrun errors on COM1. This register is cleared when the controller is reset.

COM1 Modbus Checksum Errors

Register(s) 40148 (30148) Read Only

This register holds the number of Modbus checksum errors on COM1. This register is cleared when the controller is reset.

COM1 Modbus Commands Received

Register(s) 40149 (30149) Read Only

This register holds the number of Modbus commands received on COM1. This register is cleared when the controller is reset.

COM1 Modbus Responses Sent

Register(s) 40150 (30150) Read Only

This register holds the number of Modbus responses sent on COM1. This register is cleared when the controller is reset.

LAN Modbus Checksum Errors

Register(s) 40154 (30154) Read Only

This register holds the number of Modbus checksum errors on the LAN connection. This register is cleared when the controller is reset.

LAN Modbus Commands Received

Register(s) 40155 (30155) Read Only

This register holds the number of Modbus commands received on the LAN connection. This register is cleared when the controller is reset.

LAN Modbus Responses Sent

Register(s) 40156 (30156) Read Only

This register holds the number of Modbus responses sent on the LAN connection. This register is cleared when the controller is reset.

Sensor Framing Errors

Register(s) 40157 (30157) Read Only

This register holds the number of framing errors on sensor communication with the sensor electronics. This register is cleared when the controller is reset.

Sensor Parity Errors

Register(s) 40158 (30158) Read Only

This register holds the number of parity errors on sensor communication with the sensor electronics. This register is cleared when the controller is reset.

Sensor Overrun Errors

Register(s) 40159 (30159) Read Only

This register holds the number of character-overrun errors on sensor communication with the sensor electronics. This register is cleared when the controller is reset.

Sensor Checksum Errors

Register(s) 40160 (30160) Read Only

This register holds the number of checksum errors on sensor communication with the sensor electronics. This register is cleared when the controller is reset.

Sensor Commands Sent

Register(s) 40161 (30161) Read Only

This register holds the number of sensor commands sent to the sensor electronics. This register is cleared when the controller is reset.

Sensor Responses Received

Register(s) 40162 (30162) Read Only

This register holds the number of sensor responses received from the sensor electronics. This register is cleared when the controller is reset.

PID Controller

Enable

Register(s) 40451 Read/Write

This register is used to determine which variable is used as the process value for PID control.

0 = PID Control is disabled
1 = Primary variable is used as process value
2 = Secondary variable is used as process value
3 = Tertiary variable is used as process value
4 = Registers 40471 - 40472 are used as the process value

Set Point

Register(s) 40452 - 40453 Read/Write

These registers hold the current set point for the PID control as a floating-point number in the specified floating-point format.

The setpoint is a floating-point value representing the desired value of the process value.

Gain

Register(s) 40454 - 40455 Read/Write

These registers hold the current gain setting for the PID control as a floating-point number in the specified floating-point format.

The proportional gain works as follows: A positive value of gain configures a forward-acting PID controller and a negative value of gain configures a reverse acting controller.

Reset Time

Register(s) 40456 - 40457 Read/Write

These registers hold the current reset time setting for the PID control as a floating-point number in the specified floating-point format.

The reset time, in seconds, controls the reset gain (or magnitude of integral action) in a PI or PID controller. Valid range is any value greater than 0.

Rate Time

Register(s) 40458 - 40459 Read/Write

These registers hold the current rate time setting for the PID control as a floating-point number in the specified floating-point format.

The rate time, in seconds, controls the rate gain (or magnitude of derivative action) in a PD or PID controller. Valid range is any value greater than 0.

Deadband

Register(s) 40460 - 40461 Read/Write

These registers hold the current deadband setting for the PID control as a floating-point number in the specified floating-point format

The setpoint deadband is used by the PID algorithm to determine if the process requires control outputs. If the absolute value of the error is less than the deadband, then the PID function skips execution of the control algorithm. This permits faster execution when the error is within a certain acceptable range or deadband. Valid range is any value greater than 0.

Full Scale Limit

Register(s) 40462 - 40463 Read/Write

These registers hold the current full-scale limit setting for the PID control as a floating-point number in the specified floating-point format.

The full scale limit setting is used in limiting the maximum output value of the PID control. If the PID algorithm calculates an output quantity that is greater than the value stored in full scale limit, the output quantity is set equal to the value stored in full scale limit. The full scale limit setting should always be greater than the zero scale limit setting. Valid values are between -8192 and 32767.

Zero Scale Limit

Register(s) 40464- 40465 Read/Write

These registers hold the current zero scale limit setting for the PID control as a floating-point number in the specified floating-point format.

The zero scale limit setting is used in limiting the minimum output value of the PID control. If the PID algorithm calculates an output quantity that is less than the value stored in zero scale limit, the output quantity is set equal to the value stored in zero scale limit. The zero scale limit setting should be less than the full scale limit setting. Valid values are between -8192 and 32767.

Cycle Time

Register(s) 40466 - 40467 Read/Write

These registers hold the current cycle time setting for the PID control as a floating-point number in the specified floating-point format.

The cycle time is the floating-point value of the PID algorithm execution period measured in seconds. Any value greater than or equal to 0.25 seconds (250 ms) can be specified.

Manual Output

Register(s) 40468 Read/Write

This register holds the current manual output setting for the PID control as an integer number.

The manual mode output is the value that the output is set to when the PID control is in manual mode. Valid values are between -8192 and 32767.

PID Operating Mode

Register(s) 40470 Read/Write

This register holds the current PID operating mode.

0 = Automatic PID control
1 = Manual PID control

User Defined Process Value

Register(s) 40471 - 40472 Read/Write

This register holds the process value that is used for PID calculations if register 40451 is set to use the User Defined Value.

Analog Output

Register(s) 40398 Read/Write

This register holds the value that is presently output on the analog output. This register is updated automatically if the PID control is operating. The analog output is a 4 to 20 mA output. Values from -8192 to 32767 are represented by an output of 0 to 20mA.

- ((Modbus Register 40398 + 8192) / 40959) * 20.00 = 0 to 20mA output

The analog output is read-only when the PID controller is operational. The default value is 0. The output is set to the default value at reset. When the PID block is enabled the analog output register becomes read-only.

Diagnostics

Diagnostic Bits - Operating Limits

Register(s) 40407 (30119 and 30407) Read Only

This register holds a bit-mapped value. The individual bits correspond to these conditions.

Bit 15 = Calibration flag (see register 40206)
Bit 14 = The Process Variables may not be valid
Bit 13 = Input(s) out of range or operating limits
Bit 12 = Primary signal above Upper Range Limit (URL) +10%
Bit 11 = Primary signal above Upper Range Limit (URL)
Bit 10 = Primary signal above Upper Operating Limit (URV)
Bit 09 = Primary signal below Lower Operating Limit (LRV)
Bit 08 = Primary signal below Lower Range Limit (LRL)
Bit 07 = Primary signal below Lower Range Limit (LRL) - 10%
Bit 06 = Secondary signal above Upper Range Limit (URL) + 10%
Bit 05 = Secondary signal above Upper Range Limit (URL)
Bit 04 = Secondary signal above Upper Operating Limit (URV)
Bit 03 = Secondary signal below Lower Operating Limit (LRV)
Bit 02 = Secondary signal below Lower Range Limit (LRL)
Bit 01 = Secondary signal below Lower Range Limit (LRL) - 10%
Bit 00 = N/A

Diagnostic Bits - Range Limits

Register(s) 40408 (30120 and 30408) Read Only

This register holds a bit-mapped value. The individual bits correspond to these conditions.

Bit 15 = N/A
Bit 14 = Tertiary signal above Upper Range Limit (URL) + 10%
Bit 13 = Tertiary signal above Upper Range Limit (URL)
Bit 12 = Tertiary signal above Upper Operating Limit (URV)
Bit 11 = Tertiary signal below Lower Operating Limit (LRV)
Bit 10 = Tertiary signal below Lower Range Limit (LRL)
Bit 09 = Tertiary signal below Lower Range Limit (LRL) - 10%
Bit 08 = N/A
Bit 07 = Primary variable is bad
Bit 06 = Secondary variable is bad
Bit 05 = Tertiary variable is bad
Bit 04 to 01 = Reserved
Bit 00 = Off-Line Flag (see register 40206)

Diagnostic Bits - Sensor and Hardware Protect

Register(s) 40409 (30121 and 30409) Read Only

This register holds a bit-mapped value. The individual bits correspond to these conditions.

Bit 15 = Sensor module is not updating
Bit 14 = Reserved
Bit 13 = Sensor microprocessor is not responding
Bit 12 to 09 = Reserved
Bit 08 = RTD Offset is outside normal range(1)
Bit 07 to 02 = Reserved
Bit 01 = Hardware write protect status
Bit 00 = Reserved

1. Check the RTD for physical damage if this bit is enabled. Compare RTD results with a known good RTD, and check the resistance between the RTD and case.

Modbus Register Database

The table in this section describes transmitter parameters that are assigned to Modbus registers. The registers are listed in numeric order.

The registers may be defined as read-only, or as read-and-write registers. The **Read/Write** column of the table indicates the register type:

- **Read** indicates that the register is read only.
- **Read/Write** indicates that the register can be read or written to.

The **Type** column describes the format of the Modbus register:

- **Integer** is an unsigned integer in the range 0 to 65535.
- **Float** is a floating-point number in the IEEE 754 format. Numbers are made up of one sign bit (S), eight exponent bits (E), and twenty-three mantissa bits (M). A number consists of four bytes:

Byte A	Byte B	Byte C	Byte D
SEEE EEEE	EMMM MMMM	MMMM MMMM	MMMM MMMM

  Floating-point values are stored in two consecutive registers. Both registers must be read or written in the same Modbus command.

- **ASCII** is two characters that are stored in each register. Valid values are any ASCII character. The first character is in the low order byte; the second is in the high order byte.

  The string is terminated with a NULL (= 0) character if it has fewer than eight characters. Set the first register to 0 to indicate a NULL (empty) string.

Primary Register	Alternate Register	Type	Read/ Write	Parameter
40001	30001	Integer	Read	Manufacturer's Code This register holds a constant value of 4000. This indicates that the transmitter is manufactured by Schneider Electric Systems USA, Inc..
40002	30002	Integer	Read	Type Code This register holds a value, type code, which indicates the model of the transmitter. Code Model 40120 IAP10M or IGP10M 40121 IAP10M or IGP10M 40122 IAP10M or IGP10M 40123 IAP10M or IGP10M 40320 IDP10M 40321 IDP10M
40003	30003	Integer	Read	Software Revision Level This register holds the revision number of the transmitter firmware.
40004	30004	Integer	Read	Sensor Software Version Level This register holds the version number of the sensor firmware. This is read from the sensor. It uses the format: MAJOR_VERSION * 100 + MINOR_VERSION For example: “1.19” would be viewed as “119”.
40005 - 40006	None	N/A	N/A	Reserved

Primary Register	Alternate Register	Type	Read/ Write	Parameter
40007	30007	Integer	Read	Transmitter Manufacture Date Register 40007 holds the manufacture date as bits in the format: YYYYYYY MMMM DDDDD ▸ YYYYYYY is the number of years since 1986. Add this number to 1986 to obtain the year of manufacture. ▸ MMMM is the month of manufacture. ▸ DDDDD is the day of manufacture.
40008	30008	Integer	Read	Transmitter Core Number This is a number set when the sensor core is manufactured.
40009	30009	Integer	Read	Sensor Hardware Version This register holds the version number of the sensor hardware. This is read from the sensor.
40010	30010	Integer	Read	Modbus Revision This register holds the Modbus mapping and protocol revision. It is fixed at 1.
40011	30011	Integer	Read	Sensor Type This register identifies whether the Static Pressure measures gauge or absolute pressure. Registers 40011 and 30011 have different meanings. For register 40011: 0 = absolute pressure 1 = gauge pressure For register 30011: 0 = gauge pressure 1 = absolute pressure
40012 - 40014	None	N/A	N/A	Reserved
40015	None	Integer	Read/ Write	Baud rate This register holds the serial port baud rate for the transmitter. When this register changes, it updates the serial port settings. 5 = 1200 6 = 2400 7 = 4800 8 = 9600 (default) 9 = 19200 10 = 38400
40016	None	Integer	Read/ Write	Transmitter Address This register holds the transmitter Modbus address for the serial port and LAN port.
40018 - 40031	None	N/A	N/A	Reserved
40032 - 40035	30032 - 30035	ASCII	Read/ Write	Tag Name (8 characters) These registers hold the transmitter tag name. The tag name can be up to eight characters. Two characters are stored in each register. Valid values are any ASCII character.
40036 - 40043	30036 - 30043	ASCII	Read/ Write	Description (16 characters) These registers hold the transmitter description. The description can be up to 16 characters. Two characters are stored in each register. Valid values are any ASCII character.
40044 - 40059	30044 - 30059	ASCII	Read/ Write	Message (32 characters) These registers hold the transmitter message. The message can be up to 32 characters. Two characters are stored in each register. Valid values are any ASCII character.

Primary Register	Alternate Register	Type	Read/ Write	Parameter
40060	30060	Integer	Read/ Write	Primary Variable Units This register holds a value representing the engineering units for the primary variable. The primary variable is differential pressure for the IDP10M. The primary variable is static pressure for the IAP10M and IGP10M. The units cannot be changed unless the transmitter is in offline mode. See register 40206 for the transmitter mode state. 2 = Pa 3 = kPa 4 = MPa 5 = psi 6 = inches of water at 68 F 7 = ftH2O 8 = atm 9 = bar 10 = kg/cm2 11 = g/cm2 12 = cmHg 13 = mmHg 14 = torr 15 = not applicable 16 = cmH2O 17 = mmH2O 18 = inHg 19 = mbar 30 = dy/cm2
40061 - 40062	30061 - 30062	N/A	N/A	N/A
40063 - 40115	None	N/A	N/A	Reserved
40116	None	Integer	Read	Primary Variable Integer Value This register holds the primary variable as an integer number. The diagnostic bits indicate the validity of this register.
40117 - 40118	None	N/A	N/A	N/A
40119	None	Integer	Read/ Write	Process Variable Integer Register Mode This register controls if negative values are allowed in registers 40116 to 40118. Valid values are 0 and 1. The default value is 0. 0 = Allow negative numbers 1 = Assign zero if the value is less than zero
40120 - 40125	None	N/A	N/A	Reserved
40126	None	N/A	N/A	N/A
40127	None	N/A	N/A	Reserved
40128	None	N/A	N/A	N/A
40129 - 40130	None	N/A	N/A	Reserved
40131	30131	Integer	Read/ Write	Response Delay Time This register sets the serial port response delay. The register specifies the delay from the normal response time. Valid values are 0 to 65535 milliseconds. The default value is 0.

Primary Register	Alternate Register	Type	Read/ Write	Parameter
40132	None	Integer	Read/ Write	Floating Point Format The floating-point format is fixed. This register specifies the byte order of floating-point registers. Refer to page 54 for a description of floating-point format. The only valid value is 0. The register returns 0 when read. 0 = A B C D (default) 1 = C D A B (not available) 2 = D C B A (not available) 3 = B A D C (not available)
40133 - 40144	None	N/A	N/A	Reserved
40145	30145	Integer	Read	Com1 Framing Errors This register holds the number of framing errors on com1. This register is cleared when the controller is reset.
40146	30146	Integer	Read	Com1 Parity Errors This register holds the number of parity errors on com1. This register is cleared when the controller is reset.
40147	30147	Integer	Read	Com1 Overrun Errors This register holds the number of character-overrun errors on com1. This register is cleared when the controller is reset.
40148	30148	Integer	Read	Com1 Modbus Checksum Errors This register holds the number of Modbus checksum errors on com1. This register is cleared when the controller is reset.
40149	30149	Integer	Read	Com1 Modbus Commands Received This register holds the number of Modbus commands received on com1. This register is cleared when the controller is reset.
40150	30150	Integer	Read	Com1 Modbus Responses Sent This register holds the number of Modbus responses sent on com1. This register is cleared when the controller is reset.
40151 - 40153	None	N/A	N/A	Reserved
40154	30154	Integer	Read	LAN Modbus Checksum Errors This register holds the number of Modbus checksum errors on the LAN connection. This register is cleared when the controller is reset.
40155	30155	Integer	Read	LAN Modbus Commands Received This register holds the number of Modbus commands received on the LAN connection. This register is cleared when the controller is reset.
40156	30156	Integer	Read	LAN Modbus Responses Sent This register holds the number of Modbus responses sent on the LAN connection. This register is cleared when the controller is reset.
40157	30157	Integer	Read	Sensor Framing Errors This register holds the number of framing errors on Sensor communication with the sensor electronics. This register is cleared when the controller is reset.
40158	30158	Integer	Read	Sensor Parity Errors This register holds the number of parity errors on Sensor communication with the sensor electronics. This register is cleared when the controller is reset.

Primary Register	Alternate Register	Type	Read/ Write	Parameter
40159	30159	Integer	Read	Sensor Overrun Errors This register holds the number of character-overrun errors on Sensor communication with the sensor electronics. This register is cleared when the controller is reset.
40160	30160	Integer	Read	Sensor Checksum Errors This register holds the number of checksum errors on Sensor communication with the sensor electronics. This register is cleared when the controller is reset.
40161	30161	Integer	Read	Sensor Commands Sent This register holds the number of Sensor commands sent to the sensor electronics. This register is cleared when the controller is reset.
40162	30162	Integer	Read	Sensor Responses Received This register holds the number of Sensor responses received from the sensor electronics. This register is cleared when the controller is reset.
40164 - 40203	None	N/A	N/A	Reserved
40204	30204	Integer	Read	Scaled Integer Method Scaled integers are not supported. The only valid value is 0. The register returns 0 when read.
40205	None	Integer	Read/ Write	Reset to Default Parameters Writing to this register resets the transmitter to default parameters. See the “Default Transmitter Parameters” section for default values. The transmitter calibration is reset to full scale with an offset of zero. Re-zero the transmitter after this action and verify the readings. You may need to re-span the device. A sequence of three numbers is written to the register to cause a reset. This prevents accidental modification of the register from resetting the parameters. Use the following procedure to reset the parameters: 1. Write the value 493 to the register. 2. Write the value 27254 to the register. 3. Write the value 6003 to the register. To abort the procedure, write any value other than the next value in the sequence. This register is set to 0 on every power cycle.

Primary Register	Alternate Register	Type	Read/ Write	Parameter
40206	None	Integer	Read/ Write	Sensor Operating Mode This register controls the operating mode of the transmitter: online mode, offline mode, or calibrate mode. Process values are updated only in the online mode. Place the system in a safe state before switching to offline or calibrate mode. This register must be set to offline mode before changing engineering units or re-ranging the transmitter. This register must be set to calibration mode before changing the span or the zero. This register must be in either offline mode or calibrate mode before changing the damping values. Changes are not applied until the unit is placed online. 0 = Online mode (default) 63 = Offline mode 255 = Calibrate mode The display indicates OFFLINE when the transmitter is in the offline or calibrate mode. The display operates normally in the online mode. When the transmitter is in offline mode, the only valid mode change is to online mode. This register is cleared when the power is lost to the transmitter. The transmitter starts in online mode. If power is lost while in either calibration or offline mode, the transmitter may report incorrect measurement values. Should this occur, put the transmitter in offline mode and write a valid DP Damping value. Then return the transmitter to online mode to complete the recovery. When the transmitter is placed online, it may take up to 10 seconds to refresh the readings. The transmitter does not respond to Modbus commands until the readings are refreshed.
40207 - 40315	None	N/A	N/A	N/A
40316	None	Integer	Read/ Write	Lockout Register This register can be used to prevent writing to other database registers. When a non-zero value is entered in this register, the other registers (except the Analog Output and PID Controller registers) become read-only. When a value of 0 is entered in this register, registers revert to their normal read/write status. There is also a hardware write protect jumper. Refer to the “Write Protect Jumper” section for details. This register is set to 0 (disabled) at power-up.
40317 - 40392	None	N/A	N/A	Reserved
40393 - 40394	30393 - 30394	Float	Read	Sensor Temperature Sensor temperature in degrees C.
40395 - 40396	30395 - 30396	N/A	N/A	N/A
40397	30397	Integer	Read	Input Voltage This register holds the input voltage in mV.

Primary Register	Alternate Register	Type	Read/ Write	Parameter
40398	None	Integer	Read/ Write	Analog Output This register holds the value that is presently output on the analog output. This register is updated automatically if the PID control is operating. The analog output is a 4 to 20 mA output. Values from -8192 to 32767 are represented by an output of 0 to 20mA. The analog output is read-only when the PID controller is operational. The default value is 0. The output is set to the default value at reset. When the PID block is enabled, the analog output register becomes read-only.
40399 - 40400	None	Float	Read/ Write	Atmospheric Pressure These registers hold the user-specified atmospheric pressure. This value is used when the sensor type is set to gauge in register 40011. This value is ignored if the sensor type is set to absolute. The value in this register is in the same units as the static pressure. The transmitter must be in offline mode to change this register. No change is made if the transmitter mode is not correct. The transmitter must be returned to online mode after the atmospheric pressure reference is changed.
40401 - 40402	30401 - 30402	Float	Read	Primary Variable Value These registers hold the primary variable. The diagnostic bits indicate the validity of this register.
40403 - 40404	30403 - 30404	Float	Read	Secondary Variable Value These registers hold the secondary variable. The diagnostic bits indicate the validity of this register.
40405 - 40406	30405 - 30406	Float	Read	Tertiary Variable Value These registers hold the tertiary variable. The diagnostic bits indicate the validity of this register.
40407	30119, 30407	Integer	Read	Diagnostic Bits This register holds a bit-mapped value. The individual bits correspond to these conditions: Bit 15 = Calibration flag (see register 40206) Bit 14 = The process values may not be valid; if this is the only bit set, contact Global Customer Support Bit 13 = Primary Variables are outside specification Bit 12 = DP signal above URL +10% Bit 11 = DP signal above URL Bit 10 = DP signal above Upper Operating Limit Bit 9 = DP signal below Lower Operating Limit Bit 8 = DP signal below LRL Bit 7 = DP signal below LRL - 10% Bit 6 = SP signal above URL +10% Bit 5 = SP signal above URL Bit 4 = SP signal above Upper Operating Limit Bit 3 = SP signal below Lower Operating Limit Bit 2 = SP signal below LRL Bit 1 = SP signal below LRL - 0% Bit 0 = N/A

Primary Register	Alternate Register	Type	Read/ Write	Parameter
40408	30120, 30408	Integer	Read	Diagnostic Bits This register holds a bit-mapped value. The individual bits correspond to these conditions: Bit 15 = N/A Bit 14 = Tertiary signal above URL + 10% Bit 13 = Tertiary signal above URL Bit 12 = Tertiary signal above Upper Operating Limit Bit 11 = Tertiary signal below Lower Operating Limit Bit 10 = Tertiary signal below LRL Bit 09 = Tertiary signal below LRL - 10% Bit 08 = N/A Bit 07 = Primary variable is bad Bit 06 = Secondary variable is bad Bit 05 = Tertiary variable is bad Bit 04 to 01 = Reserved Bit 00 = Offline Flag (see register 40206)
40409	30121, 30409	Integer	Read	Diagnostic Bits This register holds a bit-mapped value. The individual bits correspond to these conditions: Bit 15 = Sensor module is not updating Bit 14 = Reserved Bit 13 = Sensor microprocessor is not responding Bit 12 to 09 = Reserved Bit 08 = RTD Offset is outside normal range. Check the RTD for physical damage if this bit is enabled. Compare RTD results with a known good RTD, and check the resistance between the RTD and case. Bit 07 to 02 = Reserved Bit 01 = Hardware write protect status Bit 00 = Reserved
40410 - 40412	30122 - 30124, 30410 - 30412	N/A	N/A	Reserved
40413 - 40414	30413 - 30414	Float	Read	Primary Variable Upper Range Limit These registers hold the primary variable Upper Range Limit (URL).
40415 - 40416	30415 - 30416	Float	Read	Primary Variable Lower Range Limit These registers hold the primary variable Lower Range Limit (LRL).
40417 - 40418	30417 - 30418	Float	Read/ Write	Primary Variable Upper Operating Limit These registers hold the primary variable upper operating limit. The transmitter must be in the offline mode to change this register. No change is made if the transmitter mode is not correct. The primary variable upper operating limit may be set as high as 1.5 times the primary variable upper range limit, provided that the difference between the primary variable UOL and primary variable LOL is no larger than the difference between the primary variable URL and primary variable LRL. The difference between the primary variable UOL and primary variable LOL must also be larger than 1% of the primary variable URL.

Primary Register	Alternate Register	Type	Read/ Write	Parameter
40419 - 40420	30419 - 30420	Float	Read/ Write	Primary Variable Lower Operating Limit These registers hold the primary variable lower operating limit. The transmitter must be in the offline mode to change this register. No change is made if the transmitter mode is not correct. The primary variable lower operating limit may be set lower than the primary variable lower range limit. The primary variable lower operating limit may be set as low as 1.5 times the primary variable lower range limit, provided that the difference between the primary variable UOL and primary variable LOL is no larger than the difference between the primary variable URL and primary variable LRL. The difference between the primary variable UOL and primary variable LOL must also be larger than 1% of the primary variable URL.
40421 - 40422	30421 - 30422	Float	Read	Secondary Variable Upper Range Limit These registers hold the secondary variable Upper Range Limit (URL).
40423 - 40424	30423 - 30424	Float	Read	Secondary Variable Lower Range Limit These registers hold the secondary variable Lower Range Limit (LRL).
40425 - 40426	30425 - 30426	Float	Read/ Write	Secondary Variable Upper Operating Limit These registers hold the secondary variable upper operating limit. The transmitter must be in the offline mode to change this register. No change is made if the transmitter mode is not correct. The secondary variable upper operating limit may be set as high as 1.25 times the secondary variable upper range limit. The difference between the secondary variable UOL and secondary variable LOL must also be larger than 1% of the secondary variable URL.
40427 - 40428	30427 - 30428	Float	Read/ Write	Secondary Variable Lower Operating Limit These registers hold the secondary variable lower operating limit. The transmitter must be in the offline mode to change this register. No change is made if the transmitter mode is not correct. The secondary variable lower operating limit must be greater than or equal to 0 if absolute pressure is selected, or -1 times the atmospheric reference if gauge pressure is selected. The difference between the secondary variable UOL and the secondary variable LOL must also be larger than 0.5% of the secondary variable URL.
40429 - 40430	30429 - 30430	Float	Read	Tertiary Value Upper Range Limit These registers hold the tertiary value upper range limit (URL).
40431 - 40432	30431 - 30432	Float	Read	Tertiary Value Lower Range Limit These registers hold the tertiary value lower range limit (LRL).

Primary Register	Alternate Register	Type	Read/ Write	Parameter
40433 - 40434	30433 - 30434	Float	Read/ Write	Tertiary Value Upper Operating Limit These registers hold the tertiary value upper operating limit. The transmitter must be in the offline mode to change this register. No change is made if the transmitter mode is not correct. The tertiary variable upper operating limit may be set as high as 1.25 times the tertiary variable upper range limit, provided that the difference between the tertiary variable UOL and tertiary variable LOL is no larger than the difference between the tertiary variable URL and tertiary variable LRL. The difference between the tertiary variable UOL and tertiary variable LOL must also be larger than 0.5% of the tertiary variable URL.
40435 - 40436	30435 - 30436	Float	Read/ Write	Tertiary Value Lower Operating Limit These registers hold the tertiary value lower operating limit. The transmitter must be in the offline mode to change this register. No change is made if the transmitter mode is not correct. The tertiary variable lower operating limit may be set lower than the tertiary variable lower range limit. The tertiary variable lower operating limit may be set as low as absolute zero (-273.15°C, -459.67°F, 0 K, or 0°R), provided that the difference between the tertiary variable UOL and tertiary variable LOL is no larger than the difference between the tertiary variable URL and tertiary variable LRL. The difference between the tertiary variable UOL and tertiary variable LOL must also be larger than 0.5% of the tertiary variable URL.
40437 - 40438	30437 - 30438	Float	Read/ Write	Primary Variable Zero Calibration These registers are used to change the primary variable zero. The transmitter must be in the calibrate mode to change this register. No change is made if the transmitter mode is not correct. The primary variable zero must be within 0.5 times the primary variable URL of the default reading.
40439 - 40440	30439 - 30440	Float	Read/ Write	Primary Variable Span Calibration These registers are used to change the primary variable span. The transmitter must be in the calibrate mode to change this register. No change is made if the transmitter mode is not correct. The transmitter must be returned to online mode when the change is complete. The primary variable span divided by the transmitter span limit must result in a value of between 0.5 and 2.0.
40441 - 40442	30441 - 30442	Float	Read/ Write	Primary Variable Damping These registers hold the primary variable damping. The transmitter must be in the offline or calibrate mode to change this register. No change is made if the transmitter mode is not correct. Valid values are 0.0 (damping off), 0.5, 1.0, 2.0, 4.0, 8.0, 16.0, and 32.0 seconds. The default value is 0. The transmitter must be returned to online mode when the change is complete.
40443 - 40444	30443 - 30444	Float	Read/ Write	Secondary Variable Zero Calibration These registers are used to change the secondary variable zero. The transmitter must be in the calibrate mode to change this register. No change is made if the transmitter mode is not correct. The transmitter must be returned to online mode when the change is complete. The secondary variable zero must be within 0.5 times the secondary variable URL of the default reading.

Primary Register	Alternate Register	Type	Read/ Write	Parameter
40445 - 40446	30445 - 30446	Float	Read/ Write	Secondary Variable Span Calibration These registers are used to change the secondary variable span. The transmitter must be in the calibrate mode to change this register. No change is made if the transmitter mode is not correct. The transmitter must be returned to online mode when the change is complete. The secondary variable span divided by the transmitter span limit must result in a value of between 0.5 and 2.0. In order to change the span, at least 5% of the rated pressure must be applied, otherwise the calibration is rejected.
40447 - 40448	30447 - 30448	Float	Read/ Write	Secondary Variable Damping These registers hold the SP damping. The transmitter must be in the offline or calibrate mode to change this register. No change is made if the transmitter mode is not correct. Valid values are 0.0 (damping off), 0.5, 1.0, 2.0, 4.0, 8.0, 16.0, and 32.0 seconds. The default value is 0. The transmitter must be returned to online mode when the change is complete.
40449 - 40450	30449 - 30450	Float	Read/ Write	Tertiary Variable Zero Calibration These registers are used to change the tertiary variable zero. The transmitter must be in the calibrate mode to change this register. No change is made if the transmitter mode is not correct. The transmitter must be returned to online mode when the change is complete. The tertiary variable offset may be adjusted from the default value by up to 1% of the tertiary URL.
40451	None	Integer	Read/ Write	PID Controller Enable This register is used to determine which variable is used as the process value for PID control. 0 = PID Control is disabled 1 = Use primary variable as process value 2 = N/A 3 = N/A 4 = Use registers 40471 - 40472 as the process value
40452 - 40453	None	Float	Read/ Write	Set Point These registers hold the current set point for the PID control. The setpoint represents the desired value of the process value.
40454 - 40455	None	Float	Read/ Write	Gain These registers hold the current gain setting for the PID control. The proportional gain works as follows: A positive value of gain configures a forward-acting PID controller; a negative value of gain configures a reverse-acting controller.
40456 - 40457	None	Float	Read/ Write	Reset Time These registers hold the current reset time setting for the PID control. The reset time, in seconds, controls the reset gain (or magnitude of integral action) in a PI or PID controller. Valid range is any value greater than 0.
40458 - 40459	None	Float	Read/ Write	Rate Time These registers hold the current rate time setting for the PID control. The rate time, in seconds, controls the rate gain (or magnitude of derivative action) in a PD or PID controller. Valid range is any value greater than 0.

Primary Register	Alternate Register	Type	Read/ Write	Parameter
40460 - 40461	None	Float	Read/ Write	Deadband These registers hold the current deadband setting for the PID control. The PID algorithm uses the setpoint deadband to determine if the process requires control outputs. If the absolute value of the error is less than the deadband, then the PID function skips execution of the control algorithm. This permits faster execution when the error is within a certain acceptable range or deadband. Valid range is any value greater than 0.
40462 - 40463	None	Float	Read/ Write	Full Scale Limit These registers hold the current full-scale limit setting for the PID control. The full scale limit setting is used to limit the maximum output value of the PID control. If the PID algorithm calculates an output quantity that is greater than the value stored in full scale limit, the output quantity is set equal to the value stored in full scale limit. The full scale limit setting should always be greater than the zero scale limit setting. Valid values are between -8192 and 32767.
40464- 40465	None	Float	Read/ Write	Zero Scale Limit These registers hold the current zero scale limit setting for the PID control. The zero scale limit setting is used to limit the minimum output value of the PID control. If the PID algorithm calculates an output quantity that is less than the value stored in zero scale limit, the output quantity is set equal to the value stored in zero scale limit. The zero scale limit setting should be less than the full scale limit setting. Valid values are between -8192 and 32767.
40466 - 40467	None	Float	Read/ Write	Cycle Time These registers hold the current cycle time setting for the PID control. The cycle time is the value of the PID algorithm execution period measured in seconds. Any value greater than or equal to 0.25 seconds (250 ms) may be specified.
40468	None	Integer	Read/ Write	Manual Output These registers hold the current manual output setting for the PID control. The manual mode output is the value that the output is set to when the PID control is in manual mode. Valid values are between -8192 and 32767.
40470	None	Integer	Read/ Write	PID Operating Mode This register holds the current PID operating mode. 0 = Automatic PID control 1 = Manual PID control
40471 - 40472	None	Float	Read/ Write	User Defined Process Value This register holds the process value that is used for PID calculations if register 40451 is set to use the User Defined Value.
40473 - 40500	None	N/A	N/A	Reserved

Default Transmitter Parameters

A transmitter is reset to default values when the correct sequence is written to register 40205. The following table shows the registers that are reset, and their default values.

Primary Register	Alternate Register	Type	Value	Parameter
40060	30060	Integer	psi (5)	Primary Variable Units
40061	30061	Integer	psia (5)	N/A
40062	30062	Integer	degrees C (20)	N/A
40407	30407, 30119	Integer	current conditions	Diagnostic Bits
40408	30408, 30120	Integer	current conditions	Diagnostic Bits
40409	30409, 30121	Integer	current conditions	Diagnostic Bits
40410	30410, 30122	Integer	0	Diagnostic Bits
40411	30411, 30123	Integer	0	Diagnostic Bits
40412	30412, 30124	Integer	0	Diagnostic Bits
40417 - 40418	30417 - 30418	Float	factory maximum sensor limit	Primary Variable Upper Operating Limit
40419 - 40420	30419 - 30420	Float	factory default operating limit	Primary Variable Lower Operating Limit
40425 - 40426	30425 - 30426	Float	factory maximum sensor limit	N/A
40427 - 40428	30427 - 30428	Float	factory default operating limit	N/A
40433 - 40434	30433 - 30434	Float	factory maximum sensor limit	N/A
40435 - 40436	30435 - 30436	Float	factory minimum sensor limit	N/A
40437 - 40438	30437 - 30438	Float	0.0	Primary Variable Zero Calibration
40439 - 40440	30439 - 30440	Float	factory maximum sensor limit	Primary Variable Span Calibration (factory default)
40441 - 40442	30441 - 30442	Float	0.0	Primary Variable Damping
40443 - 40444	30443 - 30444	Float	0.0	N/A
40445 - 40446	30445 - 30446	Float	factory maximum sensor limit	N/A
40447 - 40448	30447 - 30448	Float	0.0	N/A
40449 - 40450	30449 - 30450	Float	0.0	N/A

5. Configuration

Overview

The 4000 Series Modbus Configurator software allows you to:

- Find compatible transmitters connected in your system.
- Configure transmitter communication parameters.
- Configure transmitter sensor parameters.
- Calibrate sensors.
- View diagnostic information.

System Requirements

The minimum system configuration for the configurator is:

- Microsoft Windows XP, Windows Vista, or Windows 7 operating system.
- RS232 serial port for connection with serial transmitters.
- Ethernet LAN port for connection with Ethernet transmitters.

Installing the 4000 Series Modbus Configurator

The 4000 Series Modbus Configurator installation software is downloaded from the Schneider Electric website. Follow the Installation Wizard instructions to install the configurator on your PC.

Launching the 4000 Series Modbus Configurator

Launch the application by selecting **Start > All Programs > Schneider Electric > 4000 Series Configurator > 4000 Series Configurator**.

The Configurator main window opens.

Figure 17. Configurator Main Window

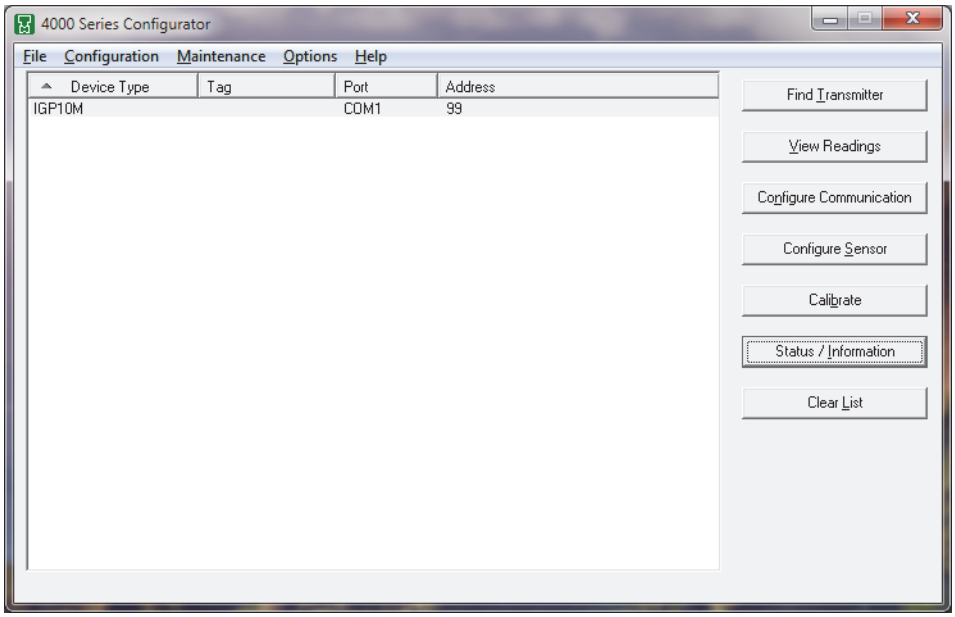

Getting Started

The list of transmitters is empty when the program starts. To quickly find and configure a transmitter, take the following steps:

1. Connect the transmitter to either the serial port of the PC or to the LAN.
2. Click **Find Transmitter** and search for the transmitter. If a transmitter is found, the list is populated.
3. Select the transmitter you want from the list.
4. Click **Configure Communication** to set the communication parameters of the transmitter.
5. Click **Configure Sensor** to set the measurement parameters of the transmitter.

The transmitter is ready for use.

File Menu

The File menu contains the Exit command, which closes the program. The Configurator does not save or print files.

Configuration Menu

The Configuration menu contains commands for editing the configuration of the transmitters.

Find Transmitter

The Find Transmitter command finds compatible transmitters connected to a serial port or a LAN port.

The Find Transmitter command finds the following transmitters:

- IAP10M
- IDP10M
- IGP10M

The serial port used on the transmitter must be configured for 8 data bits, no parity, 1 stop bit, and Modbus RTU protocol.

When this command is selected, the Find Transmitter dialog is opened.

Figure 18. Find Transmitter Dialog

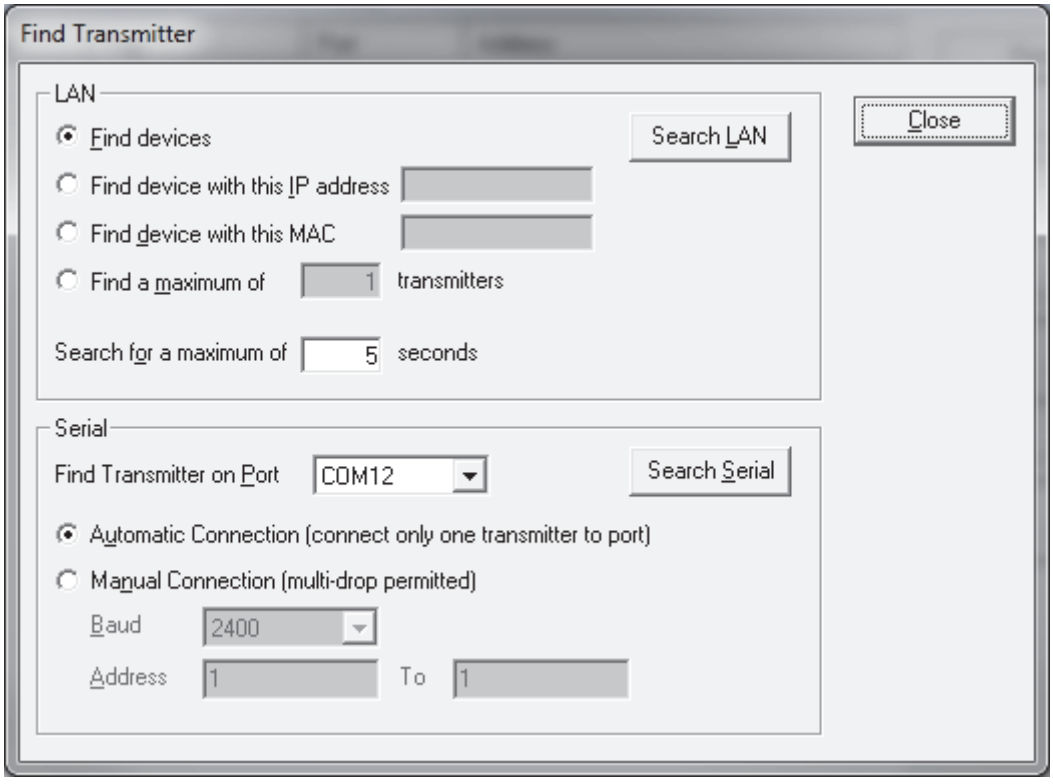

The **Close** button closes the dialog.

Finding Transmitters on a LAN

The LAN section of the Find Transmitter dialog is used to find transmitters connected on a LAN.

The **Find devices** option button selects a search for compatible transmitters on the LAN.

The **Find device with this IP address** option button selects a search for a transmitter with a specified IP address. Enter the IP address of the transmitter to find. Valid entries are any IP address in the format nnn.nnn.nnn.nnn.

The **Find device with this MAC** option button selects a search for a transmitter with a specified Ethernet MAC (Media Access Control) address. The MAC entry is a string of 6 octets; in hexadecimal format mm-mm-mm-mm-mm-mm. Valid entries are any Ethernet MAC address.

The **Find a maximum of** [**number**] **transmitters** option button selects a search for a specified number of transmitters. The search ends when the specified number of transmitters have been found or the maximum time expires. Valid values are 1 to 1000. The default value is 1.

The **Search for a maximum of** [**number**] **seconds** edit-box specifies the maximum length of the search. The valid range is 1 to 120 seconds. The default time is 5 seconds.

Click **Search LAN** to start the search. The dialog is closed and the results are displayed in the transmitter list. If no transmitters are found, a message displays and the dialog remains open.

The search works by sending a UDP broadcast to UDP port 49154. The broadcast message is sent to every device on the local subnet. A firewall may block the message.

Finding Transmitters on a Serial Port

The Serial section of the Find Transmitter dialog is used to find one, or more, transmitters connected on a Serial port.

The **Find Transmitter on Port** list box selects the serial port to search. Valid value is any serial port installed on the PC.

Select **Automatic Connection** (**connect only one transmitter to port**) to automatically connect with a transmitter. This option works if there is only one transmitter connected to the serial port. It does not work if there is more than one transmitter.

Select **Manual Connection** (**multi-drop permitted**) to specify the serial port baud rate and address for the transmitters to search for.

- The **Baud** list box specifies the baud rate. Valid values are 300, 600, 1200, 2400, 4800, 9600, 19200 and 38400, 57600, and 115200, depending on the controller. The default value is 9600.
- The **Address** boxes specify the Modbus address of the transmitters. An address range is entered in the address windows. For example, the range would be **1 To 1** for a single transmitter. For multiple transmitters, the range might be entered as **5 To 12**. Valid values are 1 to 255. The default value is 99.

Click **Search Serial** to start the search. The dialog is closed and the results are displayed in the transmitter list. If no transmitters are found, a message displays and the dialog remains open.

View Readings

The View Readings selection from the Configuration menu shows current sensor and configuration readings from the transmitter.

Values are updated continuously by reading from the transmitter. Dashes are shown in place of the readings if communication is lost.

The dialog does not open if the transmitter type is unknown. A message box displays. Contact technical support or your local representative for assistance if this occurs.

Figure 19. Transmitter Status Dialog

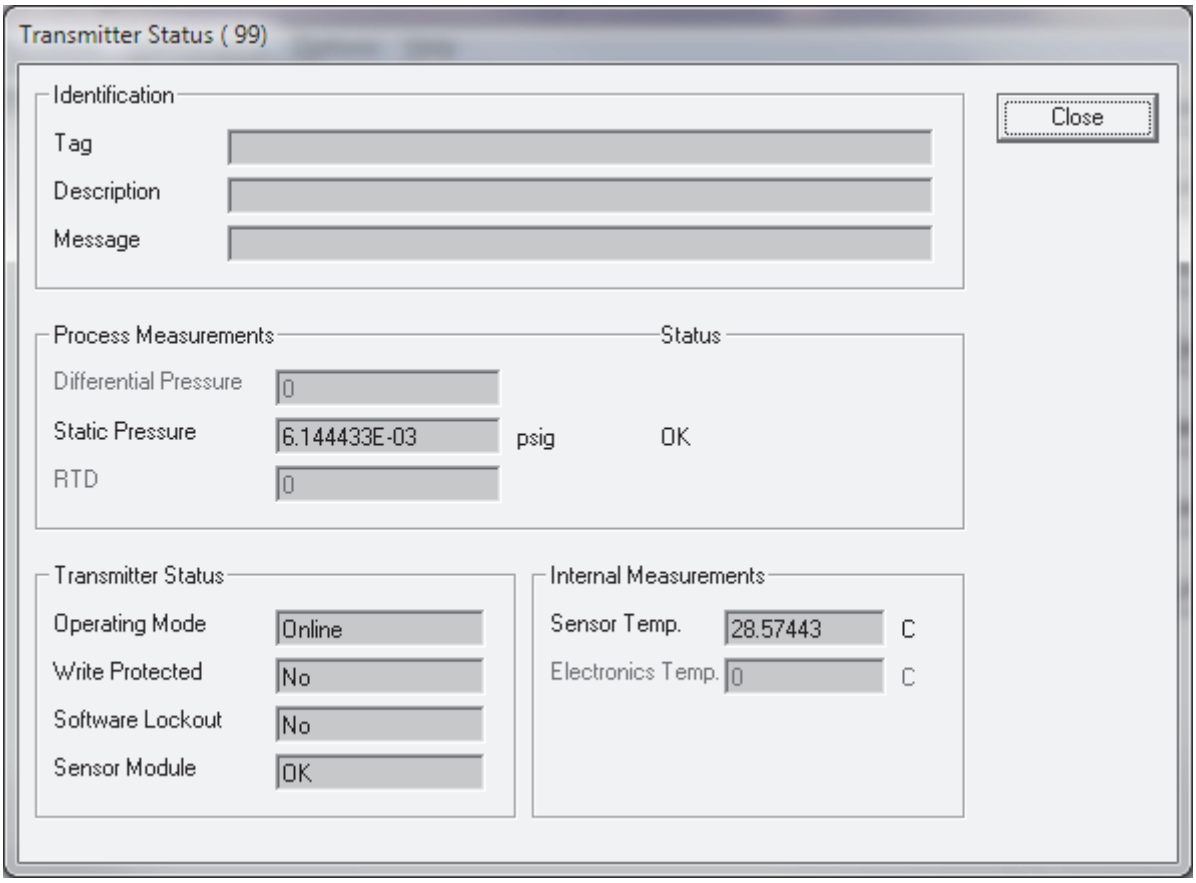

Identification Section

This section displays user entered configuration information and transmitter type.

Tag shows the user-entered tag for the transmitter.

Description shows the user-entered description for the transmitter.

Transmitter Type shows the transmitter model.

Process Measurements Section

This section displays the current sensor status and process readings.

Differential Pressure shows the differential pressure, units, and status. This control is disabled if the transmitter does not have a DP sensor.

Static Pressure shows the static pressure, units, and status. This control is disabled if the transmitter does not have a SP sensor.

RTD shows the RTD temperature, units, and status if the transmitter has an RTD sensor.

The operational status of each sensor displays under the **Status** heading. If any diagnostic flags are reported for the sensor, the message "Sensor diagnostics reported" displays. For more information on sensor diagnostics, see the Status/Information command under the Maintenance menu.

Transmitter Status Section

This section displays the overall operation, read/write, and sensor mode of the transmitter.

Operating Mode indicates if the transmitter is in online, offline, or offline calibration mode.

Write Protected indicates if the write protect jumper is installed.

Software Lockout indicates if the transmitter configuration is locked by another application.

Sensor Module indicates if the sensor hardware is working. It shows "OK" if the hardware is working correctly, or "Abnormal" if the hardware is not working correctly.

Internal Measurements Section

This section displays transmitter measurements not accessible by a user program. The information in this dialog is for diagnostic purposes only.

Sensor Temp shows the temperature of the sensor in degrees C.

Electronics Temp is disabled.

Communication

The Communication command opens the Transmitter Communication Settings dialog for the connected device.

The Transmitter Communication Settings dialog has four tabs to configure the communication settings of the transmitter. Click the tab to display the group of settings.

The communication settings are read from the transmitter when the dialog is opened. If the transmitter has not been configured, default settings are used.

Click **OK** to write the communication settings to the transmitter. If the settings are not correct, a message displays. If the settings are correct, a communication progress status box appears.

Wait for the communication to complete, or click **Cancel** to cancel communication.

Serial Tab

The Serial tab configures the transmitter serial port.

Figure 20. Transmitter Communication Settings Dialog - Serial Tab

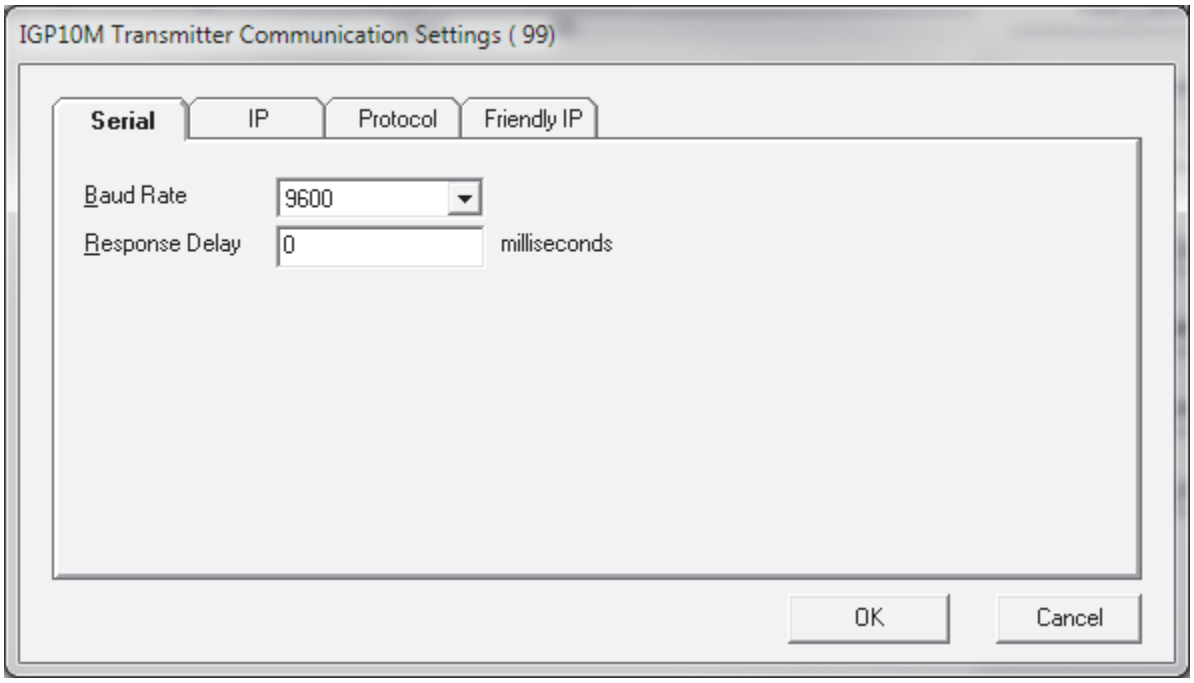

Baud Rate specifies the serial port baud rate. Valid values are 300, 600, 1200, 2400, 4800, 9600, 19200, 38400, 57600 and 115200, depending on the controller. The default value is 9600.

Response Delay specifies the serial port response delay. The transmitter waits for the specified time before transmitting a response on the serial port. Valid values are 0 to 65535 milliseconds. The default value is 0 milliseconds.

IP Tab

The IP tab configures the IP (Internet Protocol) settings for the LAN port.

Figure 21. Transmitter Communication Settings Dialog - IP Tab

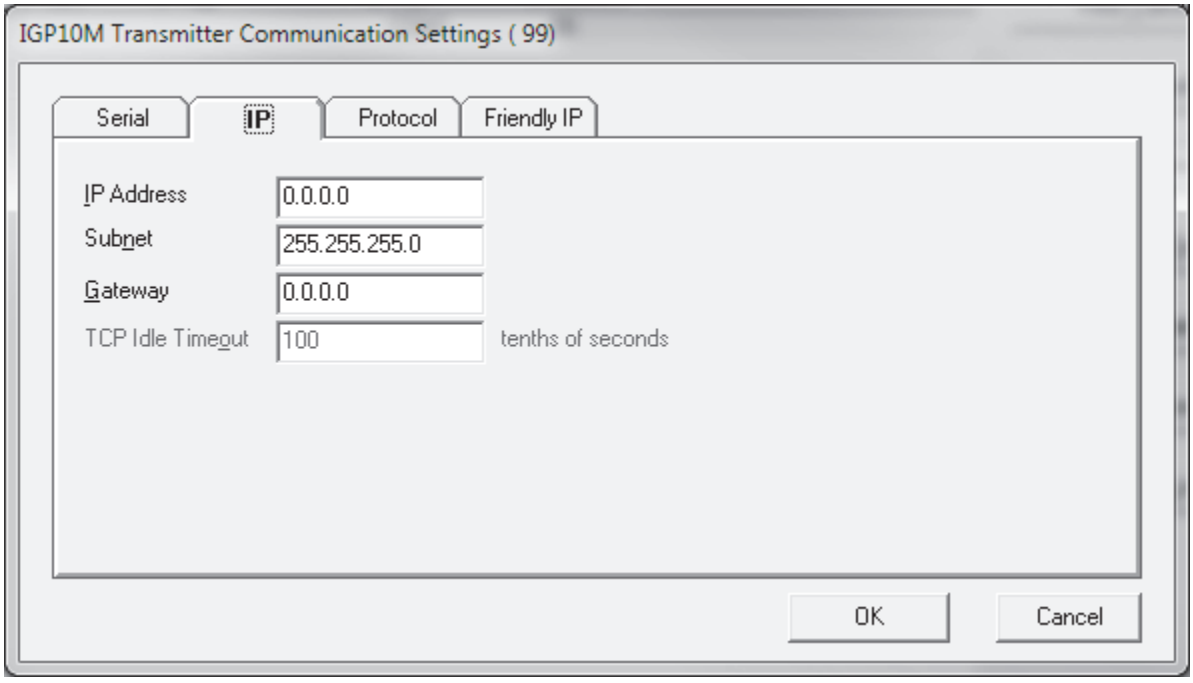

IP Address is the IP address of the transmitter. Valid values are any valid IP address, or 0.0.0.0 if you do not want to use the LAN port. Contact your system administrator for a suitable value for your LAN. The default value is 0.0.0.0 (disabled).

Subnet is the subnet mask for of the transmitter. Contact your system administrator for a suitable value for your LAN. The default value is 255.255.255.0.

Gateway is the IP address of the gateway. Valid values are any valid IP address. Contact your system administrator for a suitable value for your LAN. The default value is 0.0.0.0, which indicates that no gateway is used.

TCP Idle Timeout is disabled.

Protocol Tab

The Protocol tab configures the protocol settings for the Serial and LAN port.

Figure 22. Transmitter Communication Settings Dialog - Protocol Tab

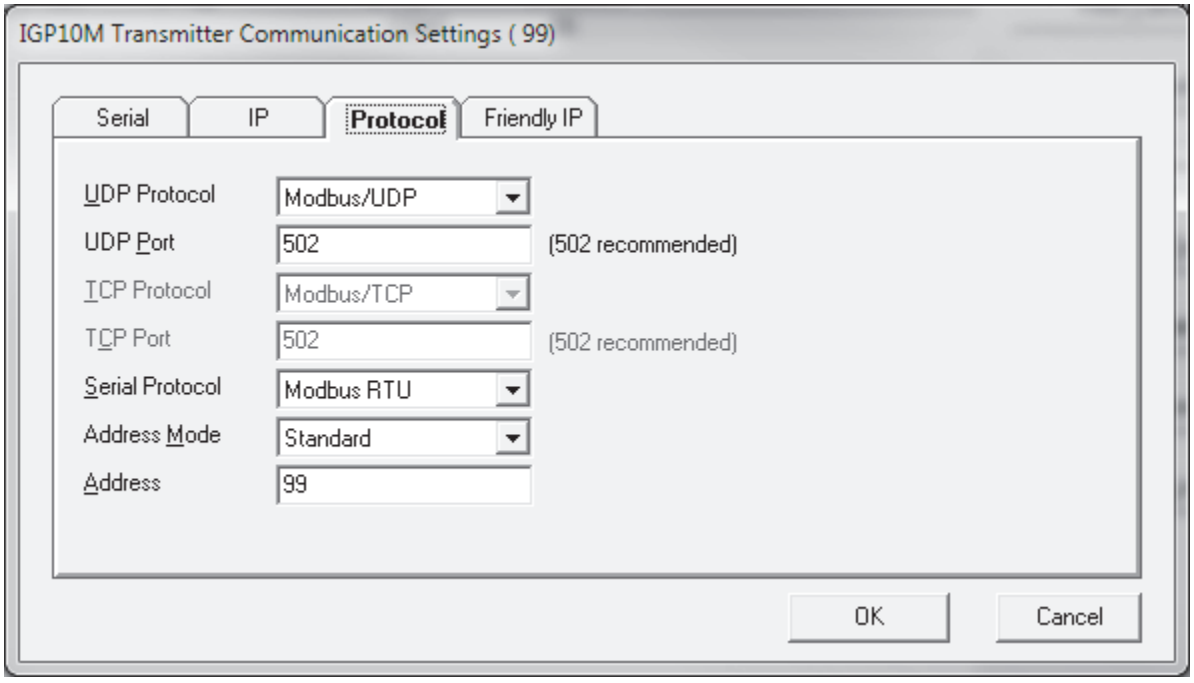

A transmitter supports up to five simultaneous serial or UDP protocol connections.

Address Mode specifies Modbus addressing. Standard addressing allows 255 stations and is compatible with standard Modbus devices. Extended addressing allows 65534 stations, with stations 1 to 254 compatible with standard Modbus devices. Valid values are Standard and Extended. The default is Standard.

Address specifies the Modbus address for the serial port and LAN connections. Valid values depend on the **Address Mode**. The default value is 1.

- Valid values for standard addressing are 1 to 255.
- Valid values for extended addressing are 1 to 65534.

Serial Protocol specifies the serial port communication protocol. Valid values are Modbus RTU. The default is Modbus RTU.

UDP Protocol selects the protocol to be used in UDP communication. Valid values are Modbus/UDP and Modbus RTU in UDP. If None is selected, the LAN port does not process Modbus/UDP or Modbus RTU in UDP messages. The default selection is Modbus/UDP. This control is disabled if the transmitter does not support Ethernet connections.

The **UDP Port** window specifies the listening port number for UDP in the transmitter. Valid values are 0 to 65535; however, port 49154 cannot be used for UDP protocols because is used in the configuration of the transmitter. The defaults are 502 for Modbus/UDP protocol, and 49152 for Modbus RTU in UDP. This is a recommendation only. Consult your network administrator to obtain a port. This control is disabled if the transmitter does not support Ethernet connections.

TCP Protocol and **TCP Port** are disabled.

Friendly IP Tab

The Friendly IP tab configures the IP addresses that the transmitter accepts. Messages from other IP addresses are ignored.

This tab is disabled if the transmitter does not support Ethernet connections.

There are two columns displayed in the main window table, **Begin IP Address** and **End IP Address**. These two entries define a block of one or more sequential IP addresses.

Figure 23. Transmitter Communication Settings Dialog - Friendly IP Tab

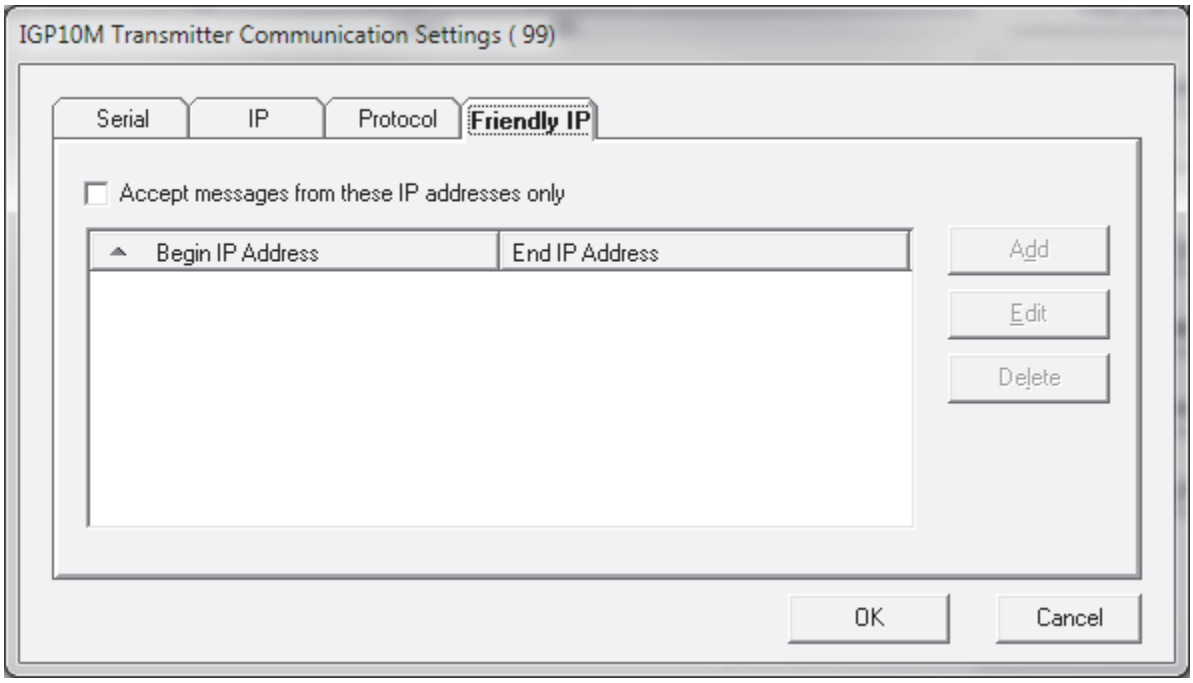

The **Accept messages from these IP addresses only** checkbox enables or disables use of the Friendly IP table. Select the checkbox to enable the table, and clear the checkbox to disable the table.

When the table is enabled, the transmitter accepts communication or configuration messages only from IP addresses that are included in the table.

- If the checkbox is cleared, the **Add**, **Edit**, and **Delete** buttons are disabled.
- If the checkbox is selected and there are no entries in the table, the **Add** button is enabled and the **Edit** and **Delete** buttons are disabled.
- If the checkbox is cleared and there are entries in the table, the **Add**, **Edit**, and **Delete** buttons are enabled.
- If no item in the table is selected, the **Edit** and **Delete** buttons are disabled.

Click **Add** to add IP addresses to the table. It opens the Add/Edit Friendly IP Table Item dialog.

Click **Edit** to edit the selected entry. It opens the Add/Edit Friendly IP Table Item dialog.

Click **Delete** to delete the selected entry from the table.

Figure 24. Add/Edit Friendly IP Table Item Dialog

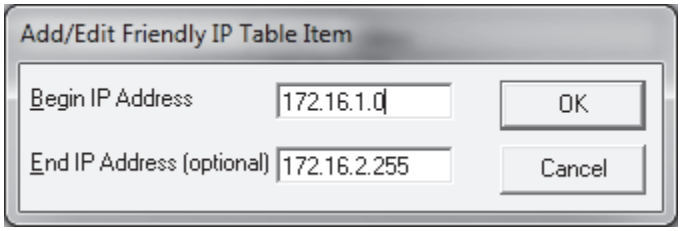

The **Begin IP Address** box specifies the begin address for the entry. The IP address has the format nnn.nnn.nnn.nnn. The default address is 0.0.0.0. The value of **Begin IP Address** must be equal or less than the value of **End IP Address**.

The **End IP Address** box specifies the end address for the entry. The IP address has the format nnn.nnn.nnn.nnn. The default address is 0.0.0.0.

Sensor

The Sensor command opens the Sensor Settings dialog. The dialog has five tabs to configure the sensor settings of the transmitter. Click the tab to display the group of settings.

The sensor settings are read from the transmitter when the dialog is opened. If the transmitter has not been configured then default settings are used.

Click **OK** to write the sensor settings to the transmitter. If the settings are not correct, a message displays. If the settings are correct, a communication progress status box appears.

Wait for the communication to complete. Click **Cancel** to cancel communication.

DP Tab

The DP (differential pressure) tab configures differential pressure sensor. This tab is available for the IDP10M transmitter only.

Figure 25. Sensor Settings Dialog - DP Tab

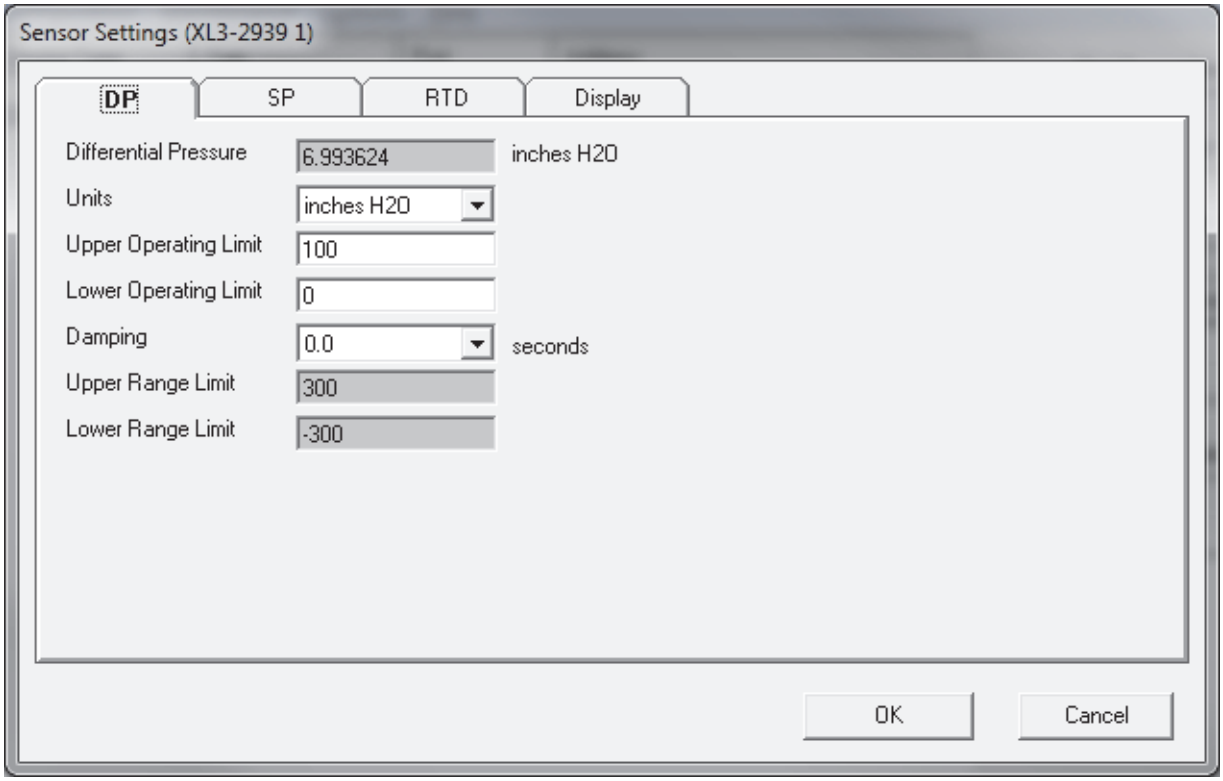

The **Differential Pressure** box displays the current DP. This value is updated continuously by reading from the transmitter. Dashes are shown in place of the reading if communication is not working.

The **Units** drop-down menu selects the measurement units for differential pressure. Valid values are Pa, kPa, MPa, psi, inH2O at 68F, ftH2O at 68F, atm, bar, kg/cm2, g/cm2, cmHg, mmHg, torr, cmH2O at 20C, mmH2O at 20C, inHg, and mbar.

Upper Operating Limit is the maximum value for the sensor. It must be less than the **Upper Range Limit**.

Lower Operating Limit is the minimum value for the sensor. It must be greater than the **Lower Range Limit**.

Upper Range Limit is the factory-set maximum for the sensor. The value is read from the transmitter and displayed here. It cannot be changed.

Lower Range Limit is the factory-set minimum for the sensor. The value is read from the transmitter and displayed here. It cannot be changed.

Damping selects the damping time for the measured value. Valid values are 0.0 (damping off), 0.5, 1.0, 2.0, 4.0, 8.0, 16.0, and 32.0 seconds. The default value is 0 (damping off).

SP Tab

The SP (static pressure) tab configures a static pressure sensor. This tab is available only for the following transmitters:

- IAP10M (primary variable)
- IGP10M (primary variable)

Figure 26. Sensor Settings Dialog - SP Tab

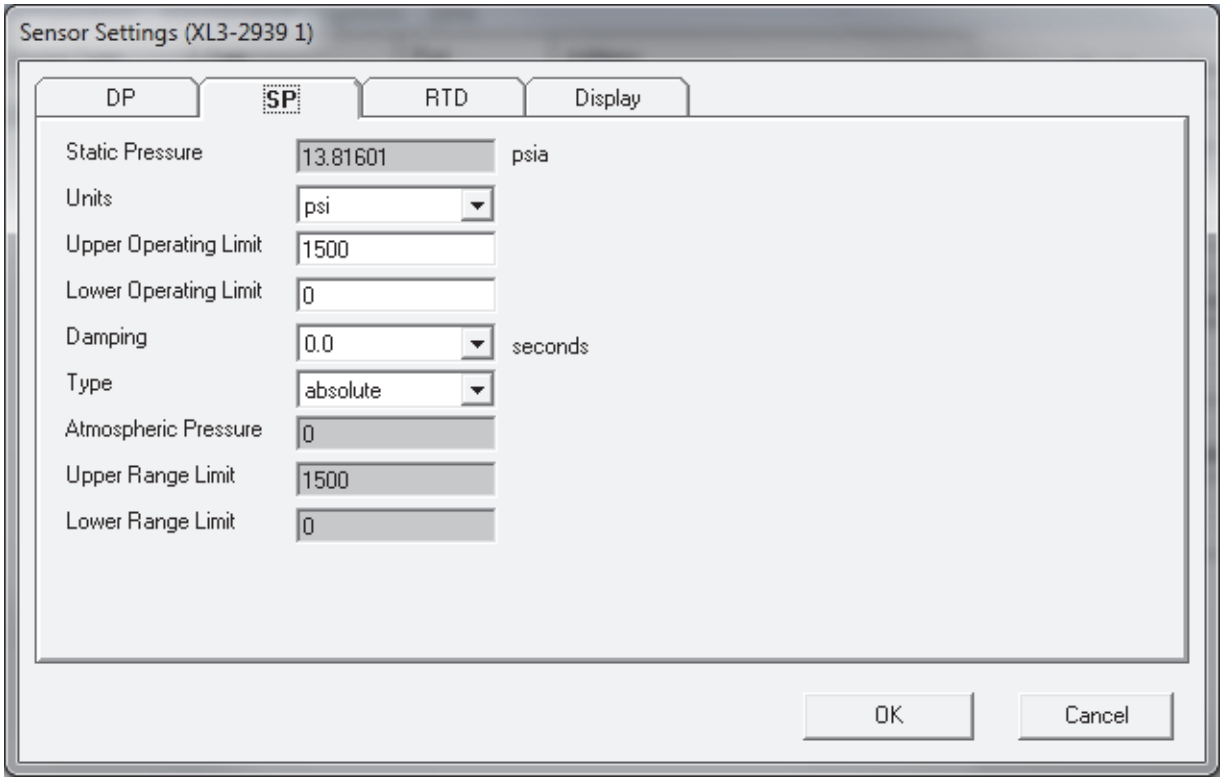

The **Static Pressure** box displays the current SP. This value is updated continuously by reading from the transmitter. Dashes are shown in place of the reading if communication is not working.

The **Units** drop-down menu selects the measurement units for static pressure. Valid values are Pa, kPa, MPa, psi, inH2O at 68F, ftH2O at 68F, atm, bar, kg/cm2, g/cm2, cmHg, mmHg, torr, cmH2O at 20C, mmH2O at 20C, inHg, mbar, and dynes/cm2.

Upper Operating Limit is the maximum value for the sensor. It must be less than the **Upper Range Limit**.

Lower Operating Limit is the minimum value for the sensor. It must be greater than the **Lower Range Limit**.

Upper Range Limit is the factory-set maximum for the sensor. The value is read from the transmitter and displayed here. It cannot be changed.

Lower Range Limit is the factory-set minimum for the sensor. The value is read from the transmitter and displayed here. It cannot be changed.

Damping selects the damping time for the measured value. Valid values are 0.0 (damping off), 0.5, 1.0, 2.0, 4.0, 8.0, 16.0, and 32.0 seconds. The default value is 0 (damping off).

Type displays the factory set static pressure sensor type for the IAP10M and IGP10M transmitters. Valid values are gauge and absolute.

Atmospheric Pressure is not used.

RTD Tab

The RTD (temperature) tab configures the temperature sensor if the transmitter has an RTD sensor.

Figure 27. Sensor Settings Dialog - RTD Tab

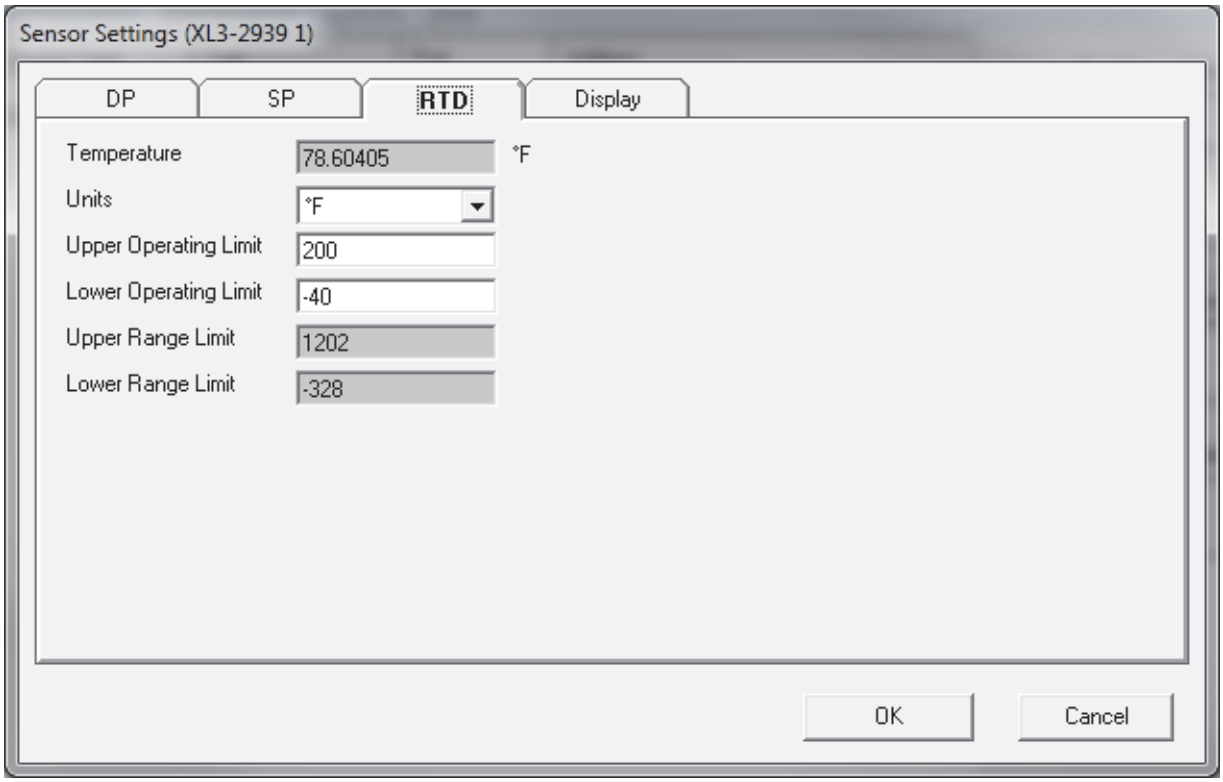

The **Temperature** box displays the current temperature. This value is updated continuously by reading from the transmitter. Dashes are shown in place of the reading if communication is not working.

PID/Analog Tab

The PID/Analog tab configures a PID controller or tracking of one of the process variables, on the analog output.

The PID controller or tracking algorithm drives the analog output when enabled. When disabled, the user can drive the analog output.

Figure 28. Sensor Settings Dialog - PID/Analog Tab

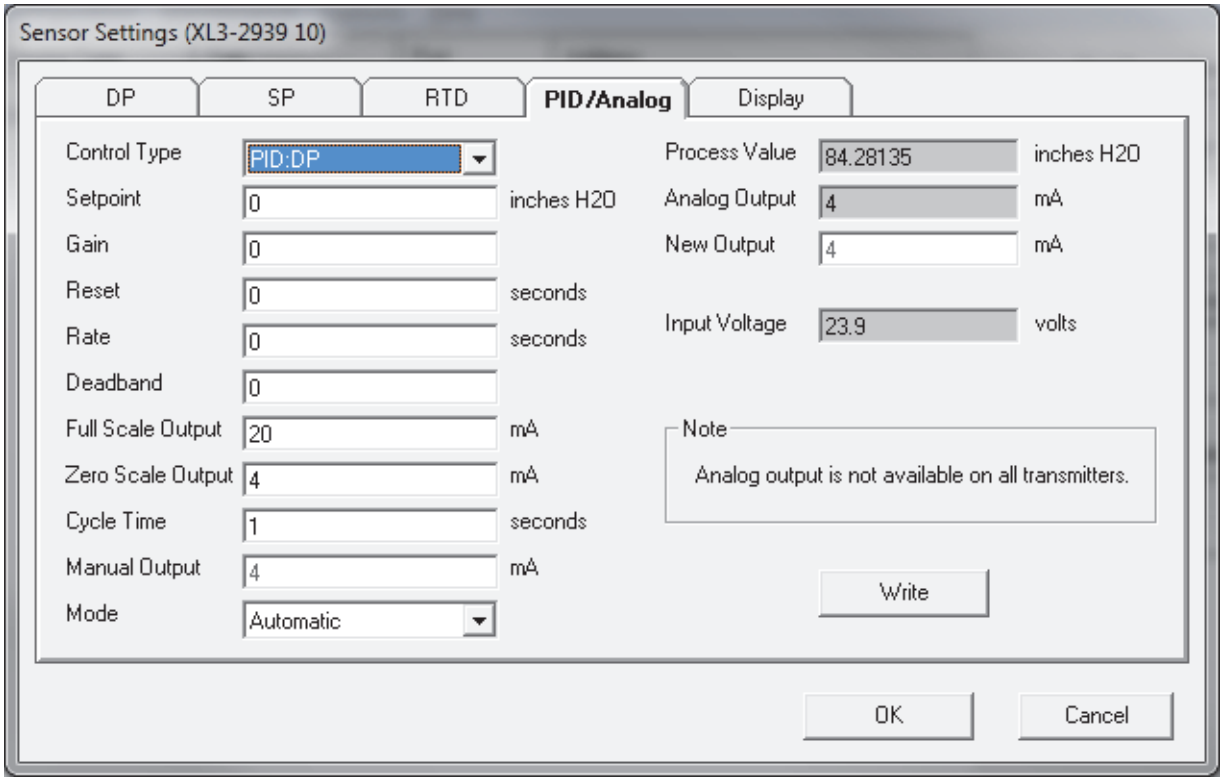

Control Type selects the source of the process variable. Valid values are based on the transmitter type:

- Disabled - controller is not active. Output can be driven manually.
- PID: DP - PID controller enabled, sensor DP is used as process value
- PID: SP - PID controller enabled, sensor SP is used as process value
- PID: RTD - PID controller enabled, sensor RTD is used as process value
- PID: Register - PID controller enabled, registers 40471 - 40472 are used as the process value

These selections are used to configure a conventional PID controller on the analog output, with the process variable set to DP, SP, or RTD. In this scenario, the user defines a set point and the PID controller attempts to drive the analog output towards the set point.

However, you may want the analog output to simply track or follow either of the above process variables. In such a scenario, an increasing analog output current corresponds to an increasing process variable: For instance, assume DP is calibrated from 0-100 psi. The analog output can be configured to proportionally track changes in DP using a simple linear relationship:

```
Change in Analog Output = Gain (Change in DP)
```

Figure 29. Analog Output Current vs Differential Pressure

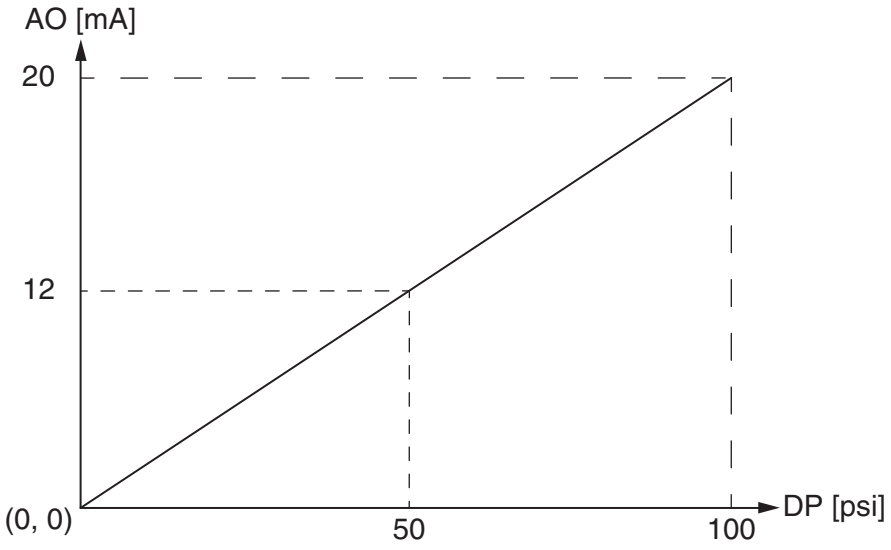

The gain is determined automatically based on the operation limit configured for the process variable, in this case 100 psi, and the analog output current range (4-20mA or 0-20mA).

To track the process value, select one of these options:

- Track: DP - Analog tracking enabled, sensor DP is used as the process value.
- Track: SP - Analog tracking enabled, sensor SP is used as the process value.
- Track: RTD - Analog tracking enabled, sensor RTD is used as the process value.

Table 18 shows the possible selections under the Control Type box for configuring PID or tracking the analog output of each transmitter.

Table 18. Control Type Selections

IAP10M IGP10M	IDP10M
Disabled	Disabled
PID: DP	PID: DP
PID: SP	Unused (Secondary)
PID: RTD	Unused (Tertiary)
PID: Register	PID: Register
Track: DP	Analog: DP
Track: SP	Unused (Secondary)
Track: RTD	Unused (Tertiary)

Setpoint specifies the PID controller setpoint. Valid values are any floating-point number. This control is disabled if Controller Type equals Disabled or Track.

Gain specifies the PID controller gain. Valid values are any floating-point number. This control is disabled if Controller Type equals Disabled or Track.

Reset specifies the PID controller reset time in seconds. Valid values are any positive floating-point number. A value of 0 disables the reset. This control is disabled if Controller Type equals Disabled or Track.

Rate specifies the PID controller rate time in seconds. Valid values are any positive floating-point number. A value of 0 disables the reset. This control is disabled if Controller Type equals Disabled or Track.

Deadband specifies the PID controller deadband. An input change within the deadband does not cause a change in the output. Valid values are any positive floating-point number. This control is disabled if Controller Type equals Disabled or Track.

Full Scale Output specifies the maximum value of the PID controller output in mA. Valid values are 0 to 20. This control is disabled if Controller Type equals Disabled.

Zero Scale Output specifies the minimum value of the PID controller output in mA. Valid values are 0 to 20. This control is disabled if Controller Type equals Disabled.

Cycle Time specifies the cycle time in seconds. Valid values are any value greater than or equal to 0.25 seconds. This control is disabled if Controller Type equals Disabled or Track.

Manual Output specifies the value of the output, in mA, when the controller is in the manual mode. Valid values are 0 to 20. This control is disabled if Controller Type equals Disabled or Track, or if Mode equals Automatic.

Mode specifies the operating mode. Valid values are manual and automatic. This control is disabled if Controller Type equals Disabled. This control is disabled if Controller Type equals Disabled or Track.

Process Value displays the process value selected by the Process Value Source. This value is updated continuously by reading from the transmitter. Dashes are shown in place of the reading if communication is not working.

Analog Output displays the value of the analog output in mA. This is the value that is controlled by the PID controller. This value is updated continuously by reading from the transmitter. Dashes are shown in place of the reading if communication is not working.

New Output specifies the value of the analog output in mA. The control is enabled if the Process Value Source is disabled. It is disabled if the PID controller or analog tracking is active. Valid values are 0 to 20. The default value is 4.

Input Voltage displays the input voltage measured by the sensor. This value is for information only and is not related to the PID controller. This value is updated continuously by reading from the transmitter. Dashes are shown in place of the reading if communication is lost.

The **Write** button writes the PID/Analog settings to the transmitter. This allows you to tune the PID loop or control the analog output without closing the dialog. If the settings are valid, a warning dialog displays.

Figure 30. Warning Dialog

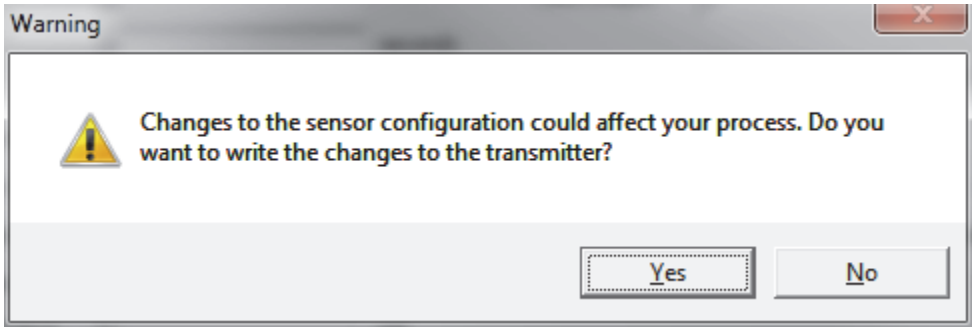

⚠ WARNING

UNINTENDED EQUIPMENT OPERATION

Evaluate the operational state of the equipment controlled by the analog output before and after writing the sensor configuration. Avoid settings that could result in improper operation of the equipment.

Failure to follow these instructions can result in death, serious injury, or equipment damage.

If you select **No**, the operation is canceled and the Sensor dialog remains open. If you select **Yes**, the PID/Analog settings are written to the transmitter.

The message displays only the first time you click **Write**, and is not displayed again until the dialog is closed.

Display Tab

The Display tab configures the local display on the transmitter.

Figure 31. Sensor Settings Dialog - Display Tab

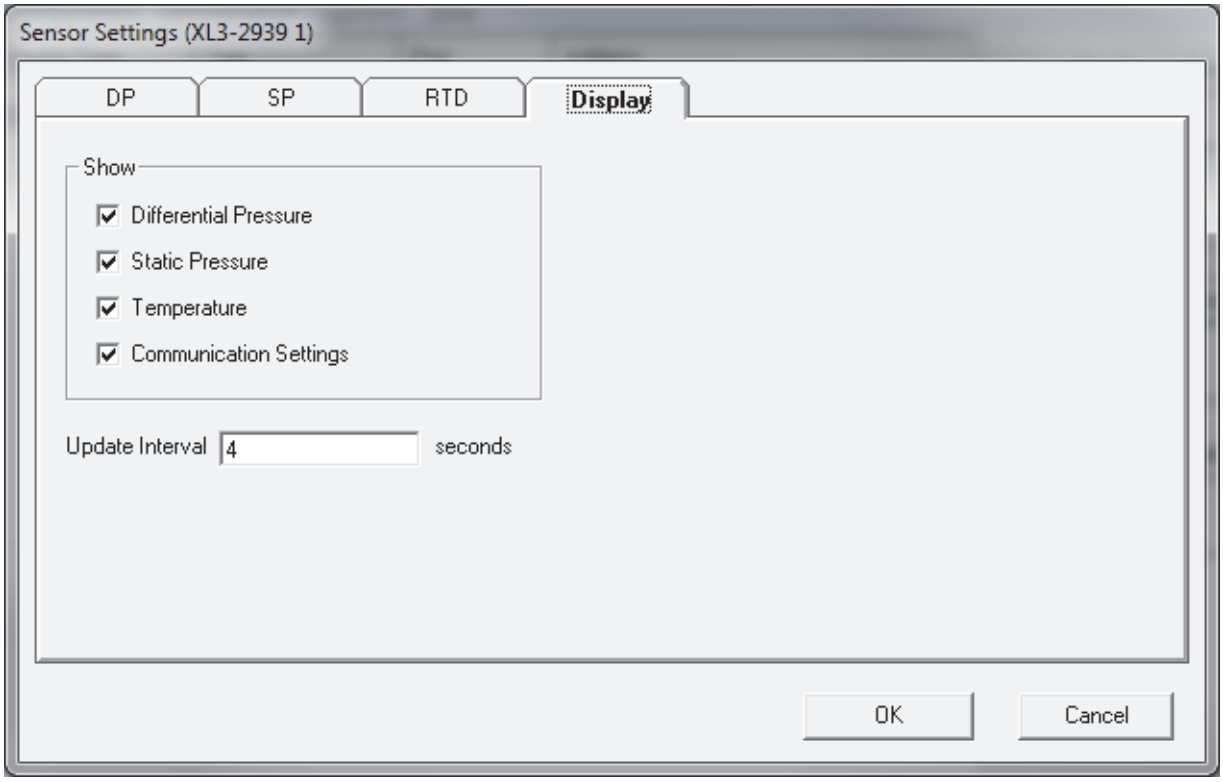

Up to four readings can be shown on the local display.

- Select **Differential Pressure** to show the differential pressure.
- Select **Static Pressure** to show the static pressure.
- Select **Temperature** to show the temperature.
- Select **Communication Settings** to show the serial port baud rate and address.

Update Interval is the length of time that each reading remains on the display. Valid values are 2 to 60 seconds. The default value is 4 seconds.

Clear List

The Clear List command removes all transmitters from the list displayed in the main window. This is useful if you have disconnected transmitters from your network after configuring them.

Maintenance Menu

The Maintenance menu contains commands for maintaining and operating the transmitters.

Calibration

The Calibration command starts the calibration wizard that guides you through the calibration process. The transmitter is put into calibration mode when the calibration dialog is opened.

Calibration requires the transmitter be disconnected from the process. Process measurements are not available during this time. Ensure the process is in a safe state before starting calibration or disconnecting the transmitter.

⚠ WARNING
PROCESS MEASUREMENTS UNAVAILABLE Process measurements may be unavailable during calibration. Ensure the process is in a safe state before executing the calibration command. **Failure to follow these instructions can result in death, serious injury, or equipment damage.**

Calibration modifies the values returned by the transmitter. Verify the device calibration before placing the transmitter back into service.

⚠ WARNING
MODIFIED READINGS Verify the device calibration before placing the transmitter back into service. **Failure to follow these instructions can result in death, serious injury, or equipment damage.**

Select Measurement to Calibrate Dialog

This dialog selects the measurement to be calibrated.

Figure 32. Calibration Dialog

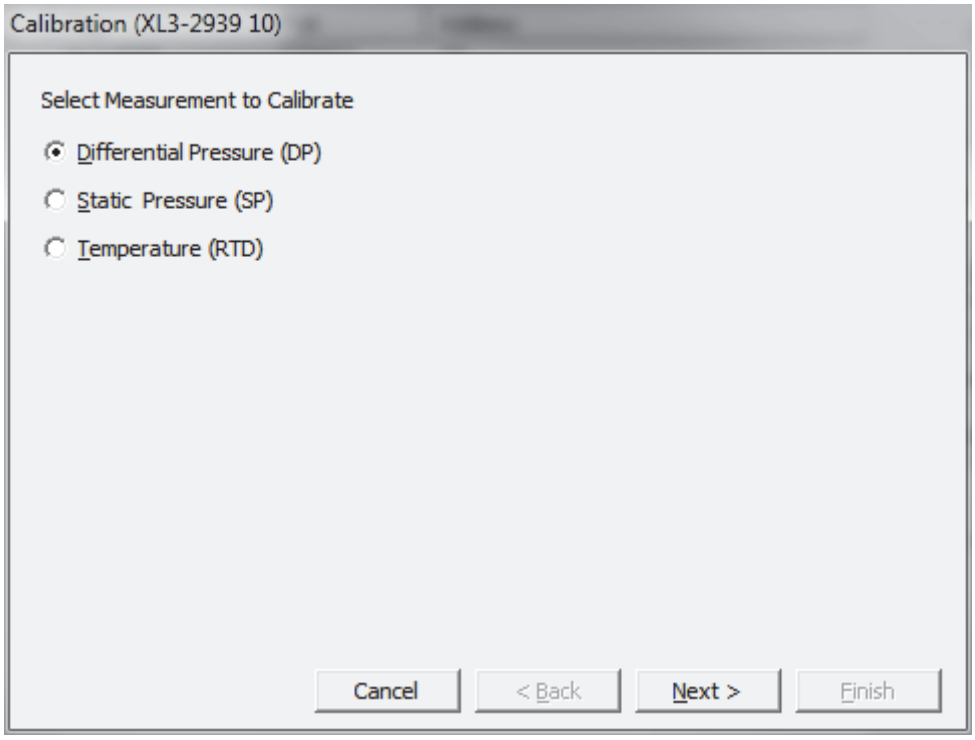

One measurement is calibrated at a time. Select the measurement to calibrate. The transmitter is put into calibration mode when the calibration dialog is opened.

The **Differential Pressure** (**DP**) option button selects the DP calibration. This control is enabled for the IDP10M transmitter. It is disabled otherwise.

The **Static Pressure** (**SP**) option button selects the SP calibration. This control is enabled for the IAP10M and IGP10M transmitters. It is disabled otherwise.

The **Temperature** (**RTD**) option button selects the RTD calibration. This control is disabled.

Click **Next** to start the selected calibration.

Click **Cancel** to stop the calibration and close the calibration dialog.

- A message box asks, "Do you want to abort calibration?" Click **Yes** to cancel calibration. Click **No** to return to the dialog.
- If calibration is canceled, the transmitter is taken out of calibration mode and put into online mode.

Select Calibration Type Dialog

This dialog selects how the measurement is calibrated. There are different dialogs for differential pressure, static pressure, and temperature.

Figure 33. Select DP Calibration Type Dialog

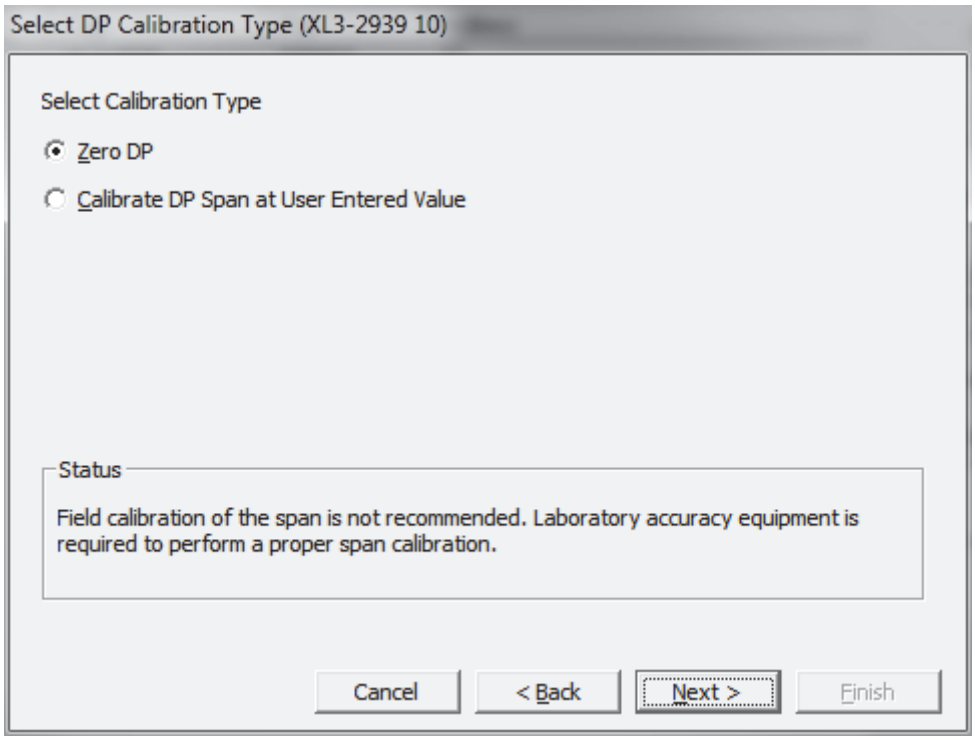

Use **Zero DP** to zero the differential pressure measurement.

Use **Calibrate DP Span at User Entered Value** to calibrate the differential pressure span at a point of your choice. Field calibration of the span is not recommended. Laboratory accuracy equipment is required to perform a proper span calibration.

The **Back** button returns to the Select Measurement to Calibrate step.

The **Next** button moves to the Calibrate step.

The **Cancel** button cancels the calibration and closes the dialog.

- A message box asks, "Do you want to abort calibration?" Click **Yes** to cancel calibration. Click **No** to return to the dialog.
- If calibration is canceled, the transmitter is taken out of calibration mode and put into online mode.

Figure 34. Select SP Calibration Type Dialog

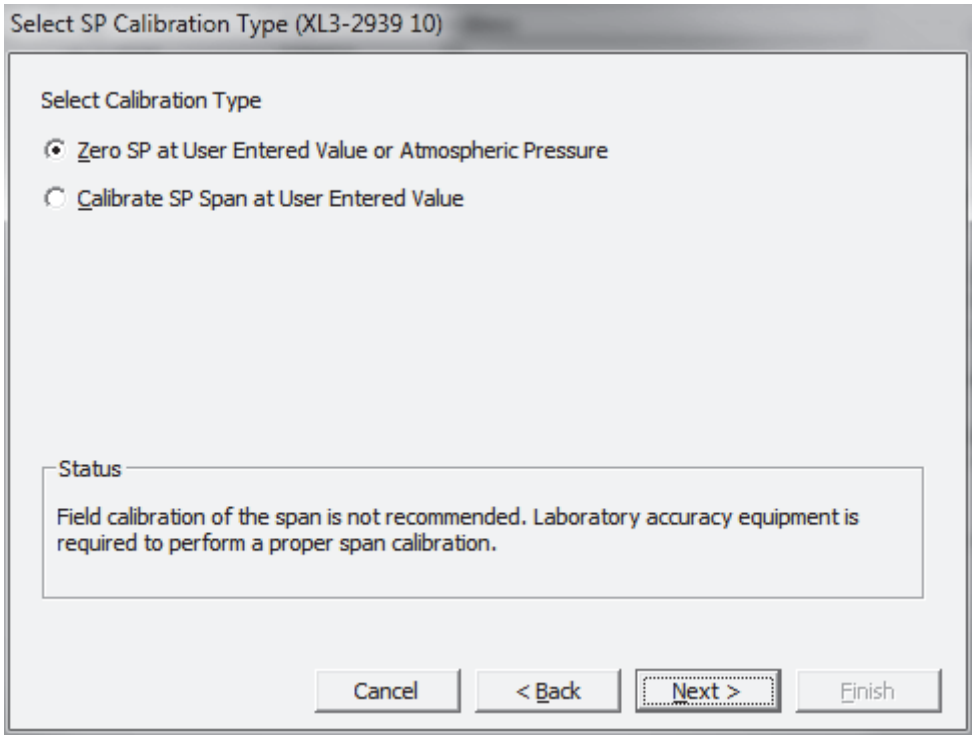

Use **Zero SP at User Entered Value or Atmospheric Pressure** to zero the static pressure measurement at a point of your choice.

Use **Calibrate SP Span at User Entered Value** to calibrate the static pressure span at a point of your choice. Field calibration of the span is not recommended. Laboratory accuracy equipment is required to perform a proper span calibration.

The **Back** button returns to the Select Measurement to Calibrate step.

The **Next** button moves to the Calibrate step.

The **Cancel** button cancels the calibration and closes the dialog.

- A message box asks, "Do you want to abort calibration?" Click **Yes** to cancel calibration. Click **No** to return to the dialog.
- If calibration is canceled, the transmitter is taken out of calibration mode and put into online mode.

Figure 35. Select RTD Calibration Type Dialog

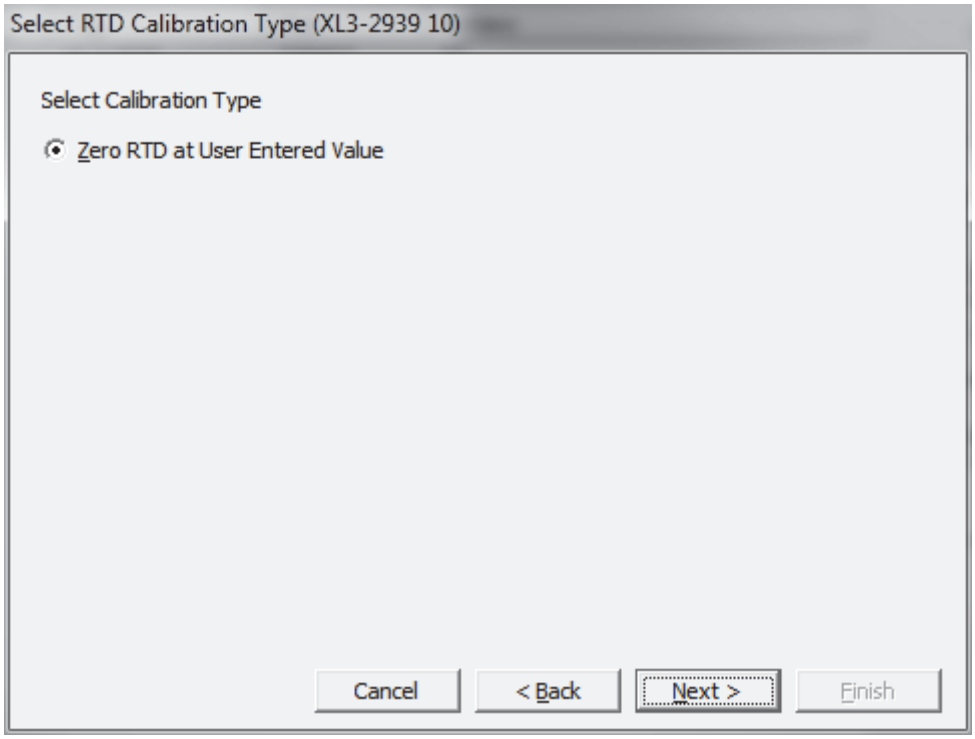

The Calibrate RTD function is disabled.

Calibrate Dialog

This dialog calibrates the measurement. There are different dialogs for each differential pressure, static pressure, and temperature calibration function.

Figure 36. Calibrate DP Dialog

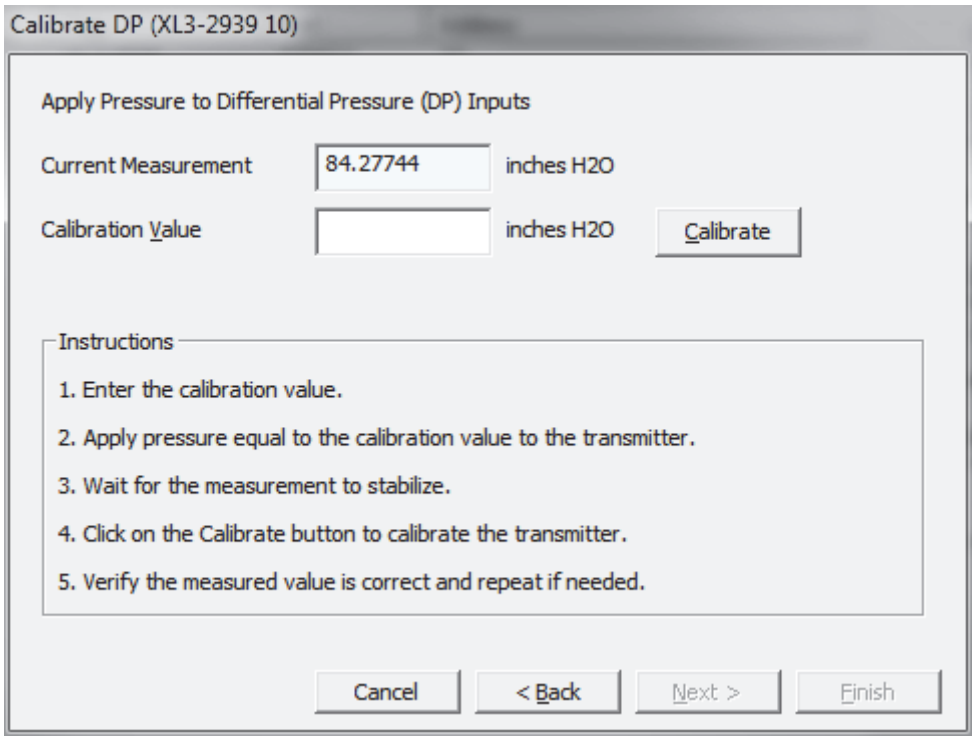

Figure 37. Calibrate SP Dialog

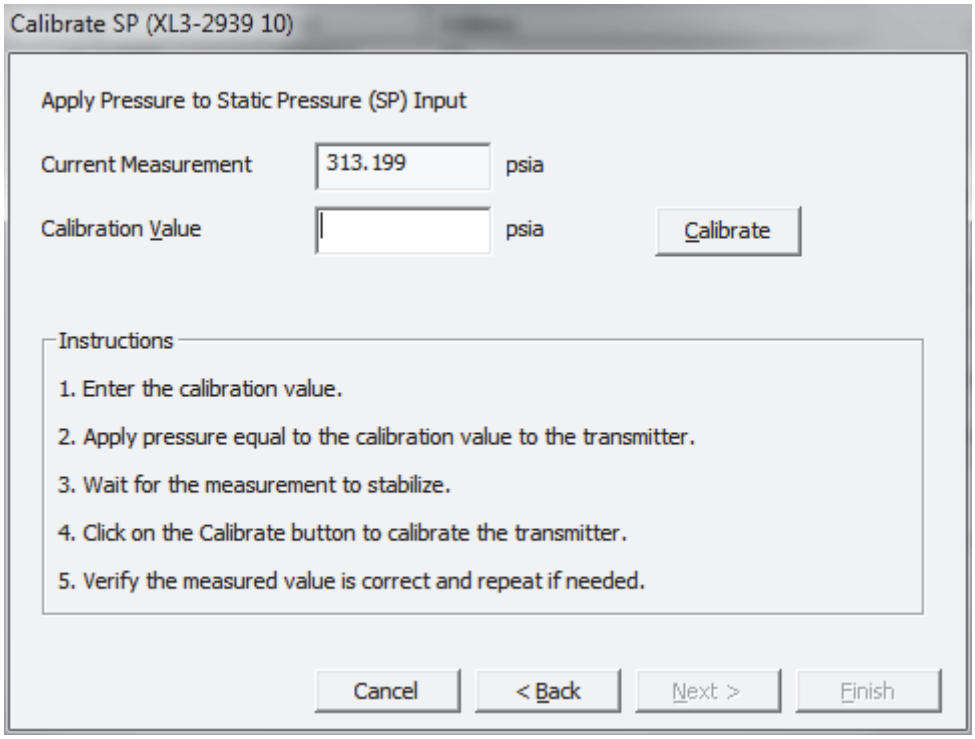

Figure 38. Zero RTD Dialog

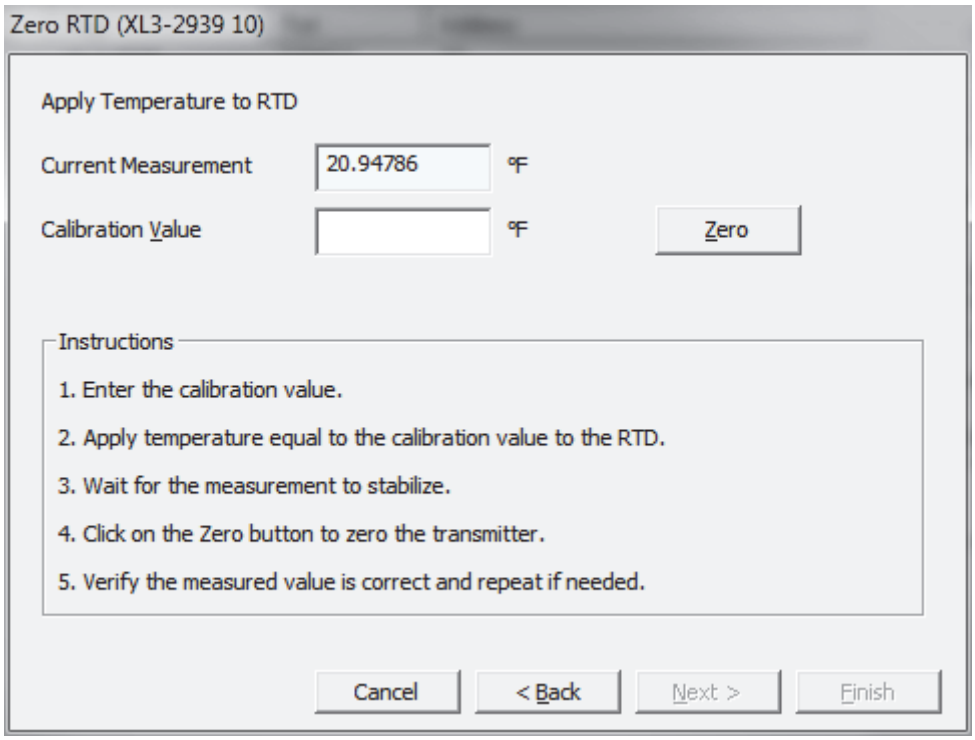

— NOTE

The Calibrate RTD function is disabled.

The **Current Measurement** shows the current measured value from the transmitter. This value is updated continuously.

The **Calibration Value** is the point at which the transmitter is calibrated. Apply this value to the transmitter. The initial calibration value is set according to the selection made on the previous dialog. It can be changed at any time. Valid values depend on the range of the measurement (upper range limit and lower range limit).

Depending on the operation being performed, either a **Calibrate** button or a **Zero** button is shown.

- The **Calibrate** button calibrates the transmitter. Apply an input equal to the calibration value to the transmitter. Wait for the measurement to stabilize. Click **Calibrate** to calibrate the transmitter. Verify that the measured value is correct, and repeat if needed.
- The **Zero** button zeroes the transmitter. Apply an input equal to the calibration value to the transmitter. Wait for the measurement to stabilize. Click **Zero** to zero the transmitter. Verify that the measured value is correct, and repeat if needed.

The **Back** button returns to the Select Calibration Type step.

The **Next** button moves to the Calibration Complete step. This button is disabled until **Calibrate** has been clicked once. The **Next** button is enabled if the **Back** button on the Calibration Complete dialog was used to return to this dialog.

The **Cancel** button cancels the calibration and closes the dialog.

- A message box asks, “Do you want to abort calibration?” Click **Yes** to cancel calibration. Click **No** to return to the dialog.
- If calibration is canceled, the transmitter is taken out of calibration mode and put into online mode.

Calibration Complete Dialog

Calibration of the measurement is now complete. You can now calibrate another measurement, or end calibration.

Figure 39. Calibration Complete Dialog

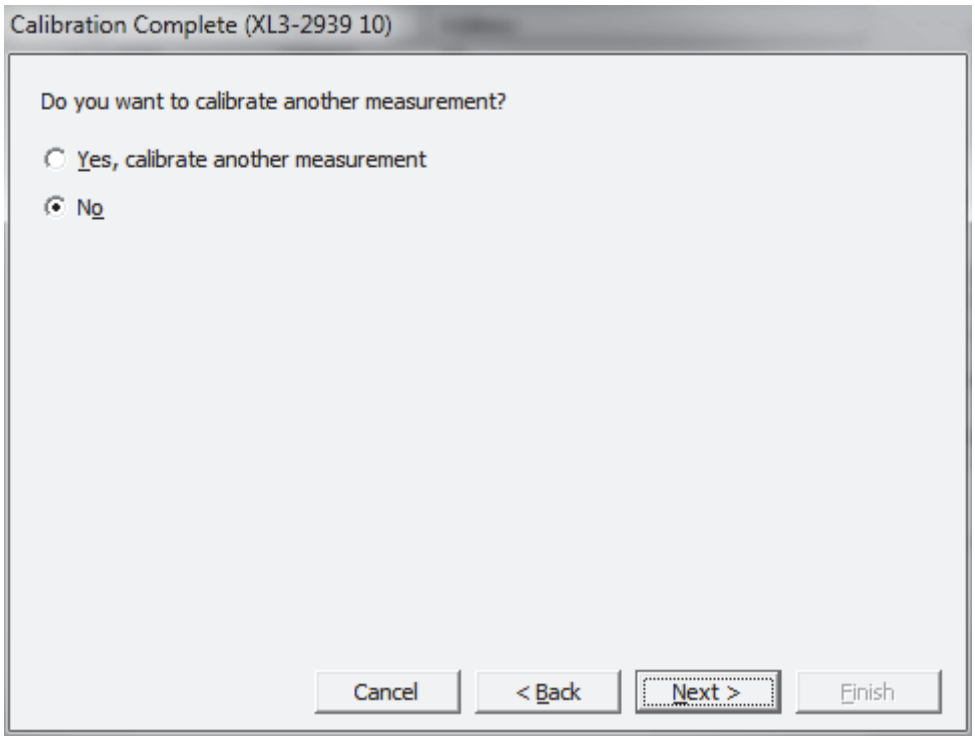

Select **Yes, calibrate another measurement** to calibrate another measurement.

Select **No** if you are finished.

The **Back** button returns to the Calibrate step.

The **Next** button moves to the Select Measurement to Calibrate step if you clicked **Yes**. It moves to the End Calibration step if you selected **No**.

The **Cancel** button cancels the calibration and closes the dialog.

- A message box asks, "Do you want to abort calibration?" Click **Yes** to cancel calibration. Click **No** to return to the dialog.
- If calibration is canceled, the transmitter is taken out of calibration mode and put into online mode.

End Calibration Dialog

The End Calibration dialog completes the calibration. The transmitter is returned to the online mode and is ready for use.

Figure 40. End Calibration Dialog

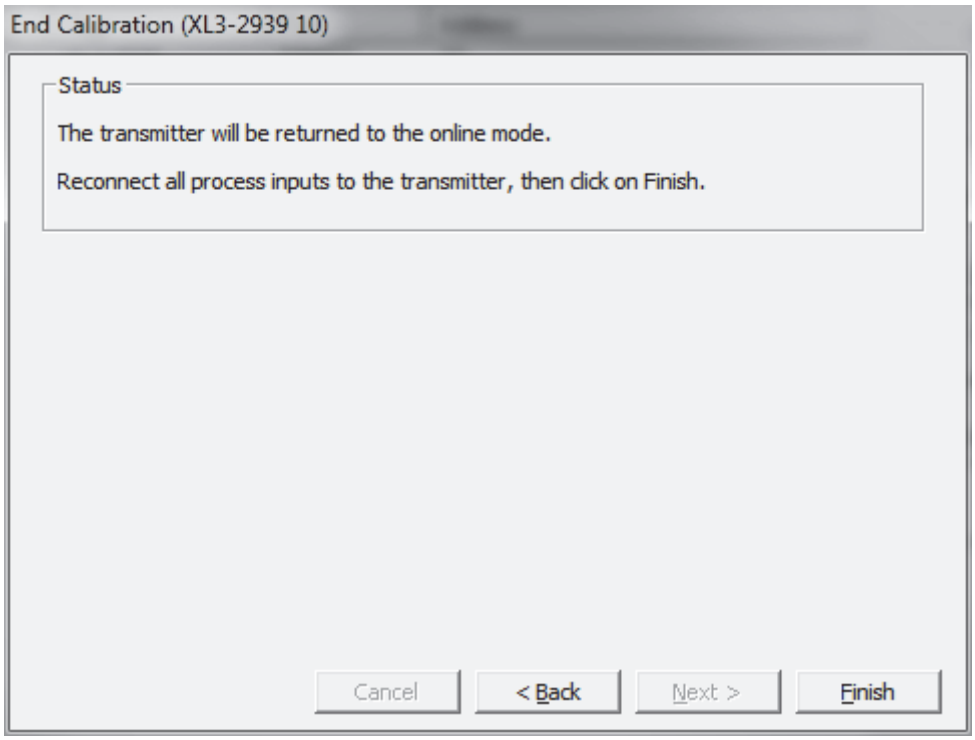

The **Back** button returns to the Calibration Complete step.

The **Finish** button ends the calibration and closes the dialog. The transmitter is taken out of calibration mode and put into online mode.

Reset Sensor Function

The Reset Sensor command resets the sensor calibration, operating limits, and units to factory default values. It does not reset the communication parameters or PID/Analog parameters.

Executing this command can change the values of readings. Changes in units may result in large changes in readings. Ensure that the process is in a safe state before executing the command.

Re-zero all inputs after executing this command. Inaccurate readings can result if inputs are not re-zeroed.

For a brief period after a sensor reset, the sensor readings are not valid.

⚠ WARNING
MODIFIED, INACCURATE OR INVALID READINGS The Reset Sensor command resets the sensor calibration, operating limits, and units. This can affect your process. Ensure that the process is in a safe state before executing the command. Re-zero all inputs after executing this command. **Failure to follow these instructions can result in death, serious injury or equipment damage.**

The Reset Sensor command displays a warning dialog.

Figure 41. Warning Dialog

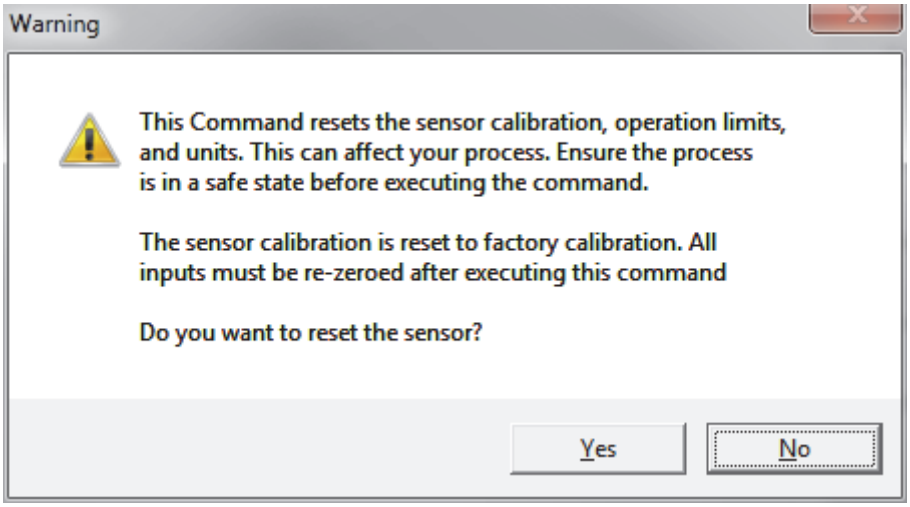

If you click **No**, the command is canceled. If you click **Yes**, the sensor calibration, operating limits, and units are reset. The default is **No**.

Table 19 shows the parameters that are reset and their values. Some parameters are not used by some transmitters.

Table 19. Reset Sensor Values

Parameter	Value after Reset
Differential Pressure Units	Psi
Differential Pressure Damping	0.0
Differential Pressure Lower Operating Limit	0.0
Differential Pressure Upper Operating Limit	factory maximum sensor limit
Differential Pressure Zero Calibration	0.0
Differential Pressure Span Calibration	factory calibration
Static Pressure Units	Psi
Static Pressure Type	not applicable
Static Pressure Damping	0.0
Static Pressure Lower Operating Limit	0.0
Static Pressure Upper Operating Limit	factory maximum sensor limit
Static Pressure Zero Calibration	0.0
Static Pressure Span Calibration	factory calibration
RTD Units	degrees C
RTD Lower Operating Limit	factory minimum sensor limit
RTD Upper Operating Limit	factory maximum sensor limit
RTD Zero Calibration	0.0
Diagnostic Bits	current conditions

The Reset Sensor function is not available if the transmitter type is unknown. A message box displays. Contact Global Customer Support for assistance.

Status/Information

The Status/Information command opens the Transmitter Status dialog. The dialog has three tabs to display status information and configure the tag name and description of the transmitter. Click the tabs to display the groups of settings.

The status and configuration are read from the transmitter when the dialog is opened. If the transmitter has not been configured then default settings are used.

Click **OK** to write the information settings to the transmitter. If the settings are not correct, a message displays. If the settings are correct, a communication progress status box appears.

Wait for the communication to complete. Click **Cancel** to cancel communication.

Information Tab

The Information tab displays information about the sensor and lets you configure the transmitter tag, description, and message.

Figure 42. Transmitter Status Dialog - Information Tab

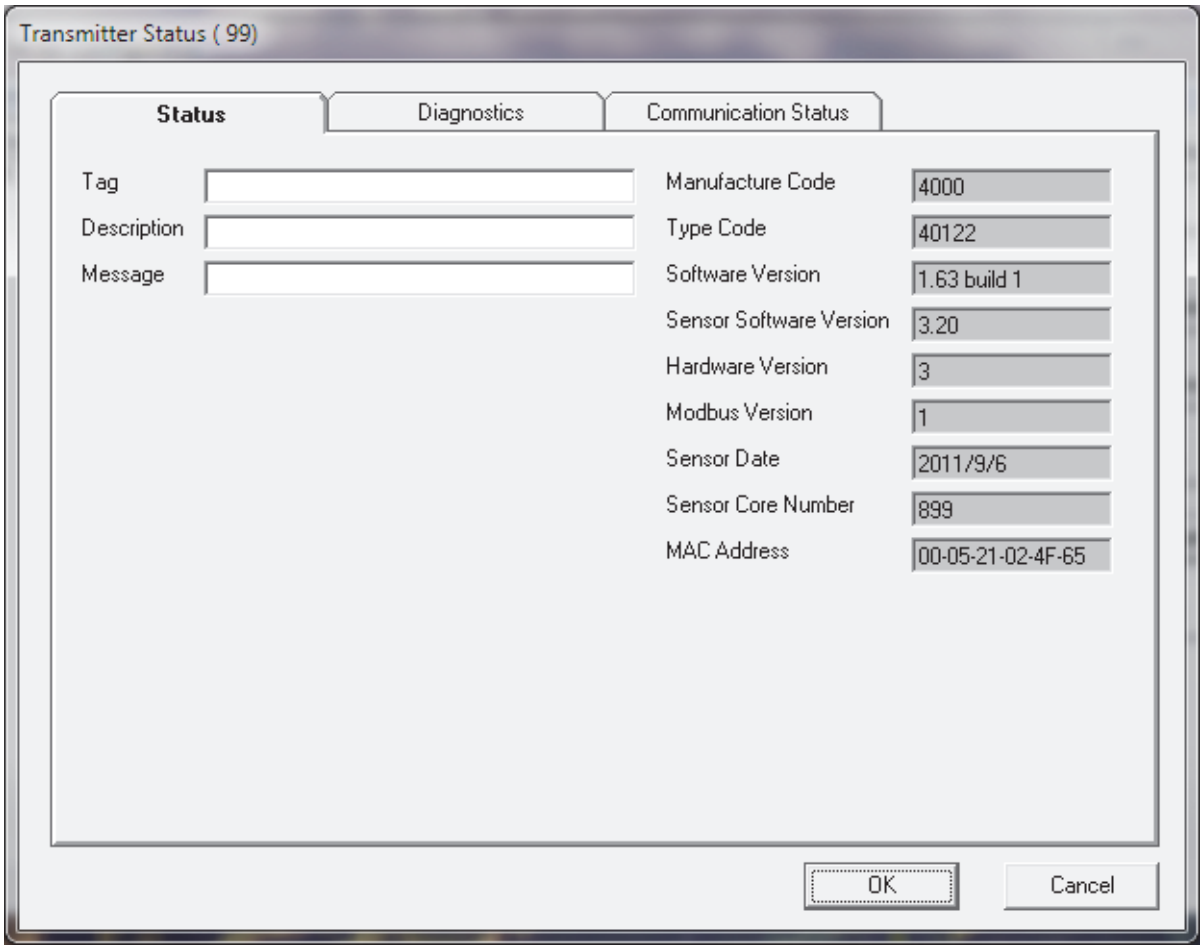

Tag is the user-entered tag for the transmitter. The tag is eight characters long. Valid values are any ASCII character. The default value is blank.

Description is the user-entered description for the transmitter. The description is 16 characters long. Valid values are any ASCII character. The default value is blank.

Message is the user-entered message for the transmitter. The message is 32 characters long. Valid values are any ASCII character. The default value is blank.

Manufacturer Code identifies the manufacturer.

- 4000 = SCADA & Telemetry or Foxboro manufactured

Type Code identifies the type of the transmitter.

- 4012x = 4012 AP/GP or IAP10M/IGP10M models
- 4032x = 4032 DP or IDP10M models

Software Version identifies the transmitter firmware version.

Sensor Software Version identifies the sensor firmware version.

Hardware Version identifies the hardware version.

Modbus Version identifies the Modbus protocol firmware version.

Sensor Date is the manufacture date of the sensor electronics.

Sensor Core Number identifies the sensor.

MAC Address is the Ethernet MAC address of the transmitter.

Diagnostics Tab

The Diagnostics tab displays the sensor diagnostic messages. Conditions are displayed if the corresponding diagnostic bit indicates an abnormal condition. Normal conditions are not shown.

The values are updated continuously by reading from the transmitter.

Figure 43. Transmitter Status Dialog - Diagnostics Tab

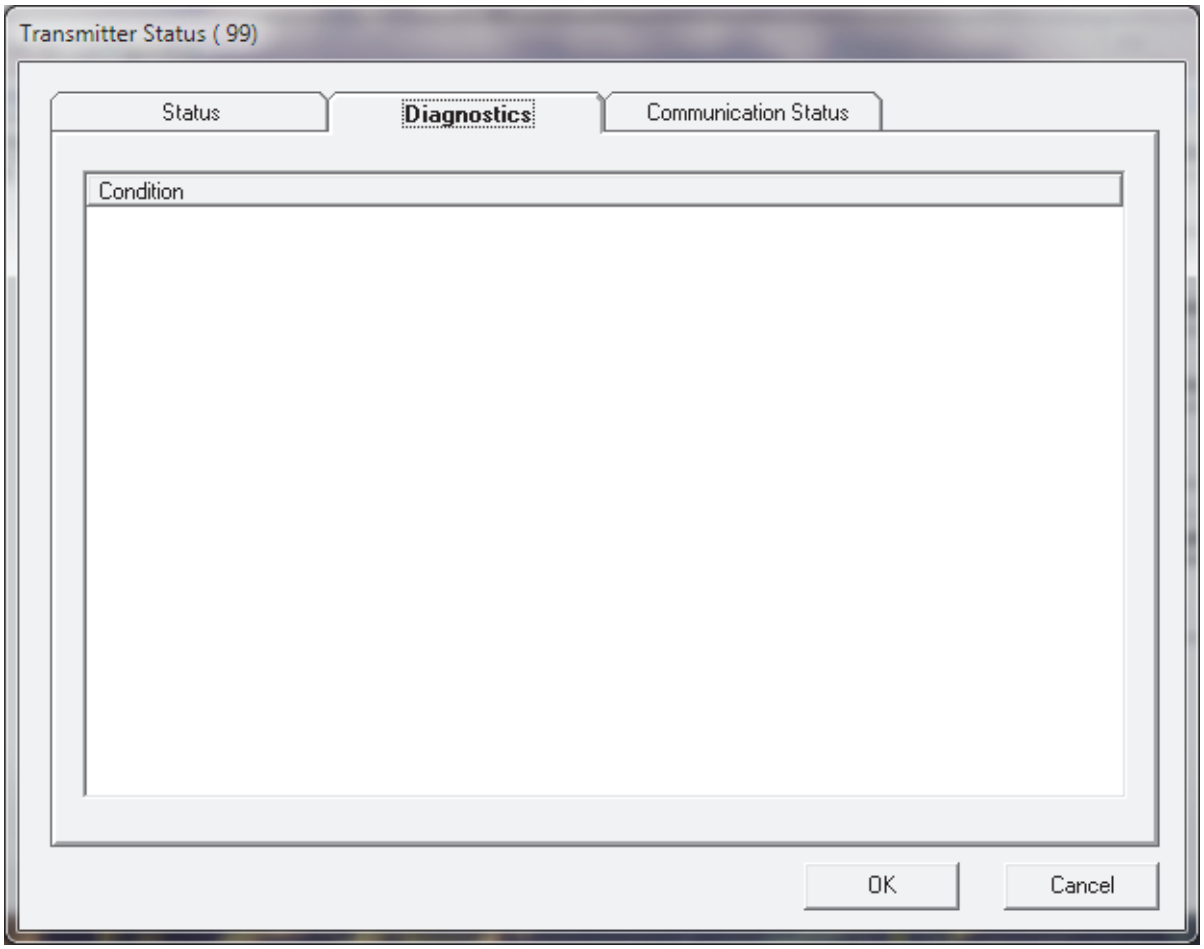

Communication Status Tab

The Communication Status tab displays communication statistics for the transmitter. Statistics are available for the COM1 serial port, the LAN port, and the internal sensor communication. The values are updated continuously by reading from the transmitter.

During transmitter configuration, a small number of errors for the communication ports are normal.

Figure 44. Transmitter Status Dialog - Communication Status Tab

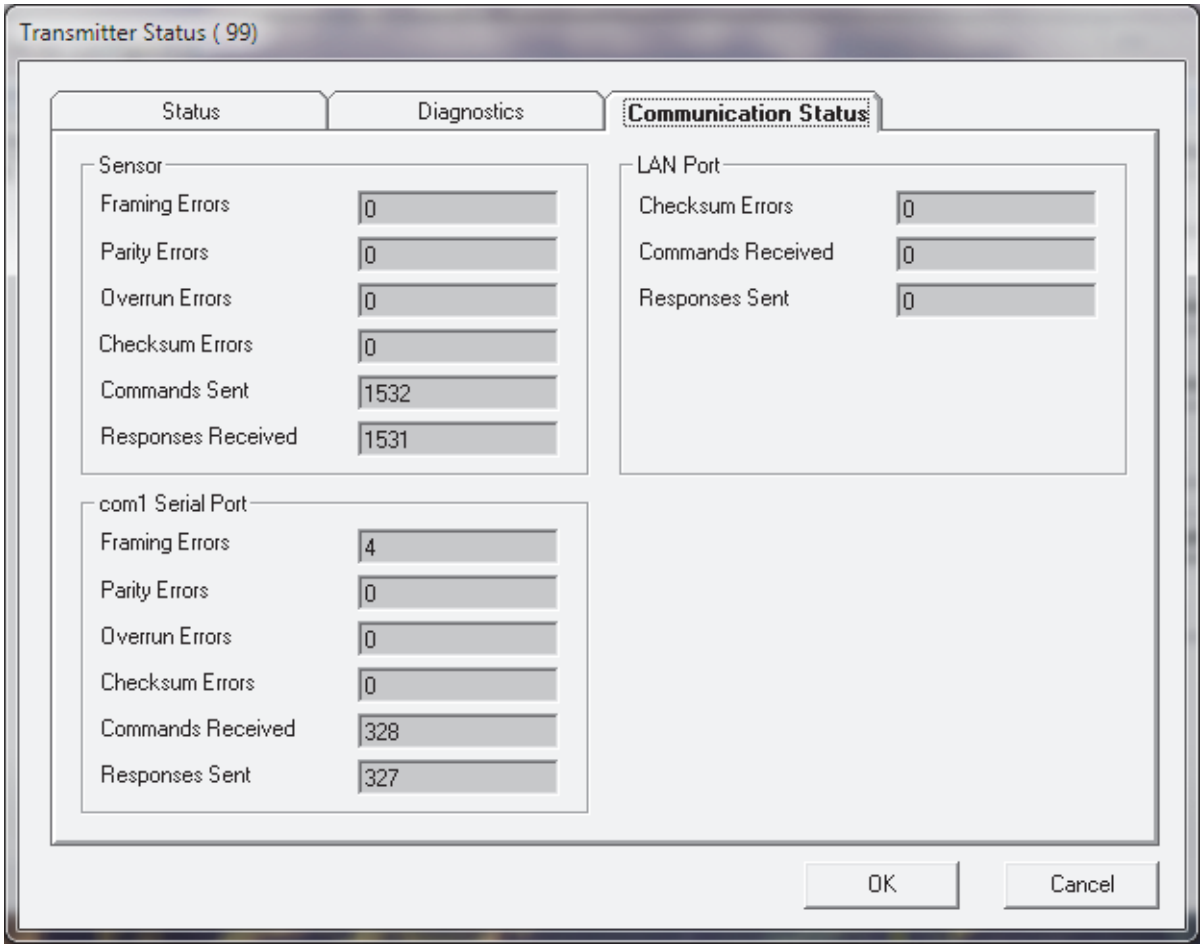

Framing Errors is the number of serial character framing errors. Framing errors indicate garbled communication or mismatched serial communication parameters.

Parity Errors is the number of serial parity errors. Parity errors indicate garbled communication.

Overrun Errors is the number of serial character overrun errors. Overrun errors indicate garbled communication.

Checksum Errors is the number of Modbus checksum errors. Checksum errors indicate garbled communication.

Commands Received is the number of Modbus commands received.

Responses Sent is the number of Modbus responses sent. Normally this is roughly equal to the number of commands received.

Commands Sent is the number of commands sent to the sensor.

Responses Received is the number of responses received from the sensor. Normally this is roughly equal to the number of commands sent. A difference that is changing indicates communication problems with the sensor.

Options Menu

The Options menu contains commands for editing the communication settings.

Communication Settings

The Communication Settings dialog edits the communication settings for the configurator.

Figure 45. Communication Settings Dialog

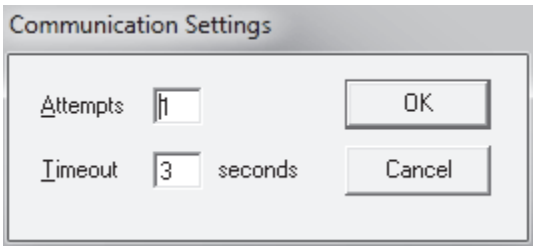

Attempts is the number of times a message is sent before a communication loss occurs. Valid values are 1 to 50. The default value is 3.

Timeout is the length of time to wait for a response before making another attempt or reporting a communication loss. Valid values are 1 to 60 seconds. The default value is 3 seconds.

Help Menu

The Help menu provides information about the configurator.

User Manual

The User Manual command opens the user manual.

The User Manual is an Adobe Acrobat PDF document. Adobe Acrobat Reader must be installed on the system to read the user manual.

About

The About command displays information about the program.

Figure 46. About Configurator Dialog

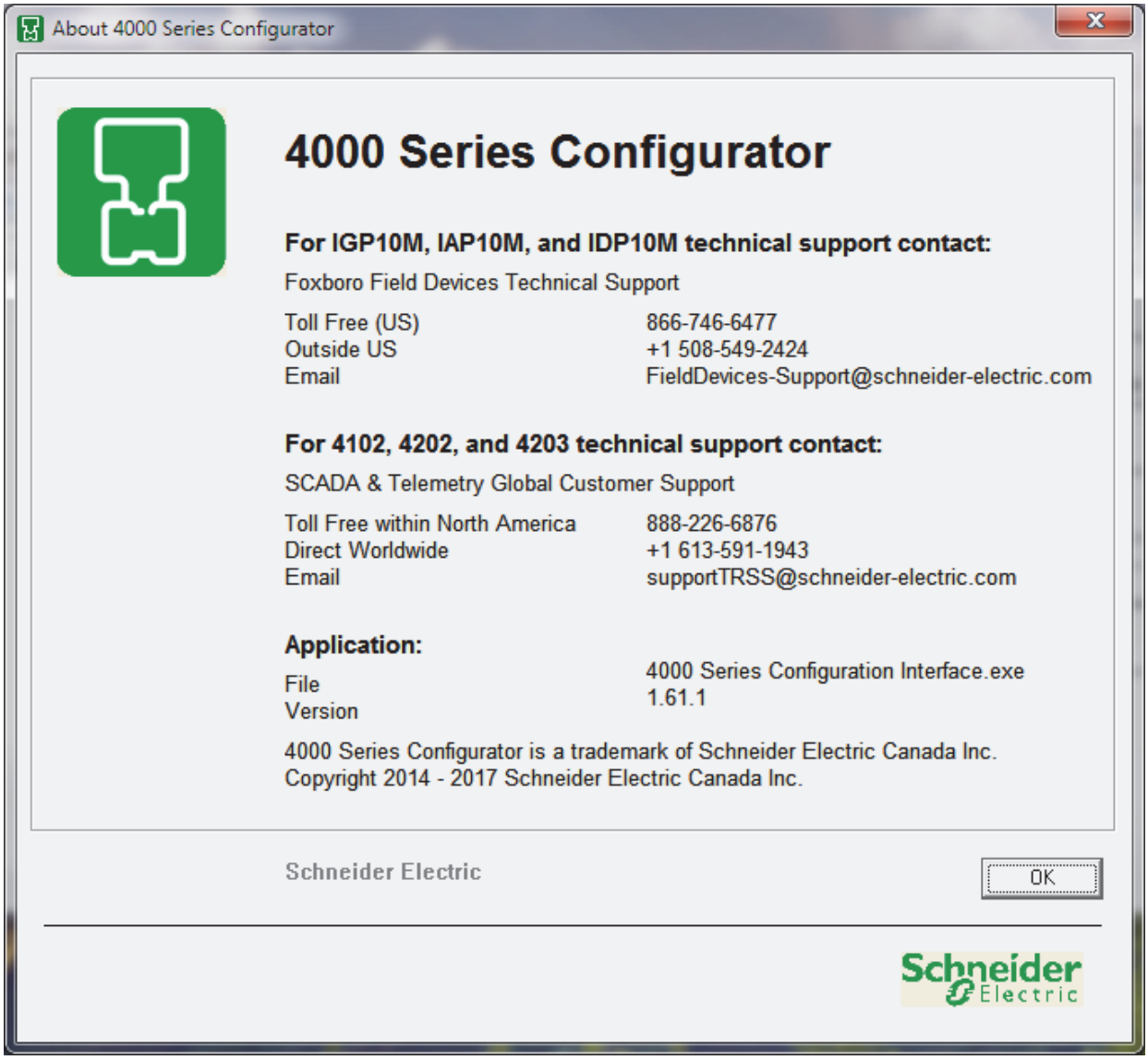

6. Maintenance

The analog input and output circuitry are calibrated at the factory and do not require periodic calibration. Calibration may be necessary if the module has been repaired.

If the transmitter is not functioning correctly, contact Global Customer Support for information on returning the transmitter for repair.

⚠ DANGER

HAZARD OF ELECTRIC SHOCK, EXPLOSION, OR ARC FLASH

Do not connect or disconnect any field wiring unless the power is off or the area is known to be non-hazardous.

Failure to follow these instructions will result in death or serious injury.

Venting and Draining (IDP10M)

The IDP10M transmitter provides sensor cavity draining without the need for side drain connections, regardless of whether the transmitter is mounted vertically or horizontally. Sensor cavity venting is provided by mounting horizontally.

Figure 47. Sensor Cavity Venting and Draining

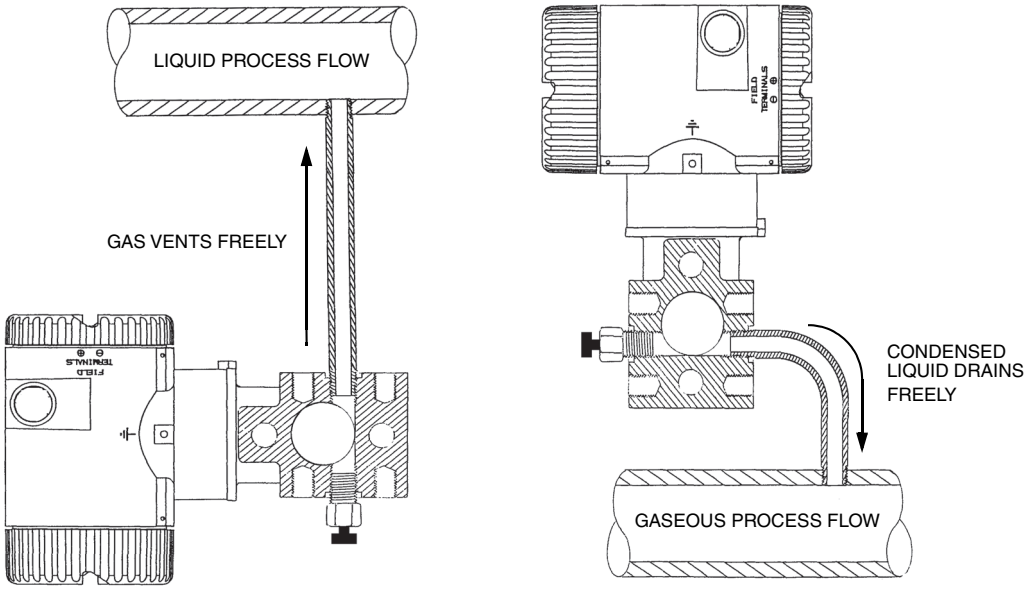

Sensor Calibration

Calibration requirements are determined by local regulatory agency and/or corporate policies. These requirements vary, and it is important to understand the calibration requirements for your installation.

Before Attempting Calibration

Field calibration is not recommended unless the calibration equipment is at least two times more accurate than the sensor itself (±0.05% of span, and ±0.15°C for temperature).

If you feel that calibration is required, but do not have access to equipment with the necessary accuracy, please return the unit to Schneider Electric Systems USA, Inc. or send it to a calibration lab.

See “Connections for Sensor Calibration” on page 26 for details on how to connect to the sensor for the calibration process.

7. Troubleshooting

Table 20. Analog Output

Condition	Action
Outputs are 0mA	Check the power supply.
	Check the wiring. The transmitter analog output is a sinking type and is not ground referenced.
The full-scale output is less than 20mA	Ensure that the load resistance and power supply are within specification.

Table 21. Communication

Condition	Action
LAN port does not work	Set the LAN switch to the right position for Ethernet operation before power is applied to the transmitter.
LAN communication does not work	Ensure that the wiring is correct for direct connection, or connection through a hub, switch or router.
	Ensure that the subnet and gateway settings are correct.
Serial port does not work	Set the COM1 switch to the right position for RS-232 operation. Set the COM1 switch to the left position for RS-485 operation and follow grounding and shielding instructions.

8. Dimensions

NOTE

1. Conduit connections are 1/2 NPT on both sides. Plug the unused connection with the metal plug supplied.
2. IDP10M process connections are made directly to the process cover using 1/4 NPT internal thread in the process cover.
3. Topworks can be rotated to any position within one turn counterclockwise of the fully tightened position.
4. Do not use the 1/4 NPT internal thread to direct-connect the IAP10M/IGP10M transmitter.

Figure 48. IDP10M Dimensions

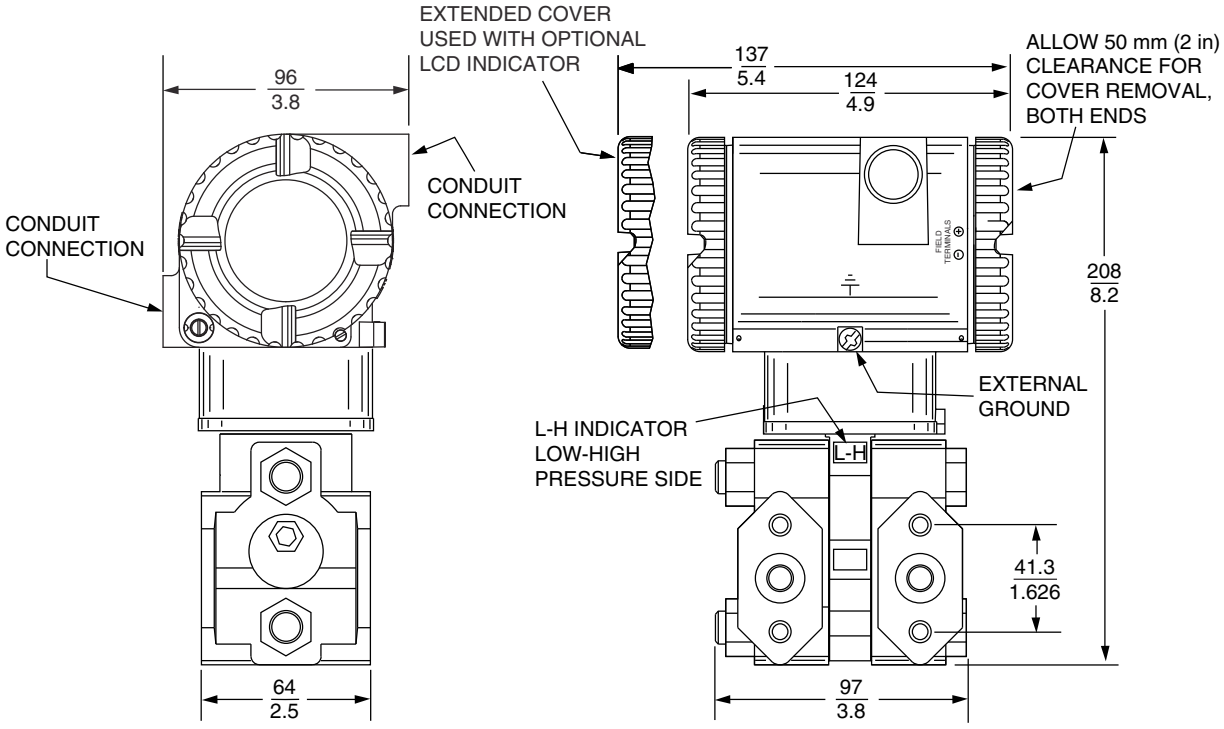

Figure 49. IAP10M and IGP10M Dimensions

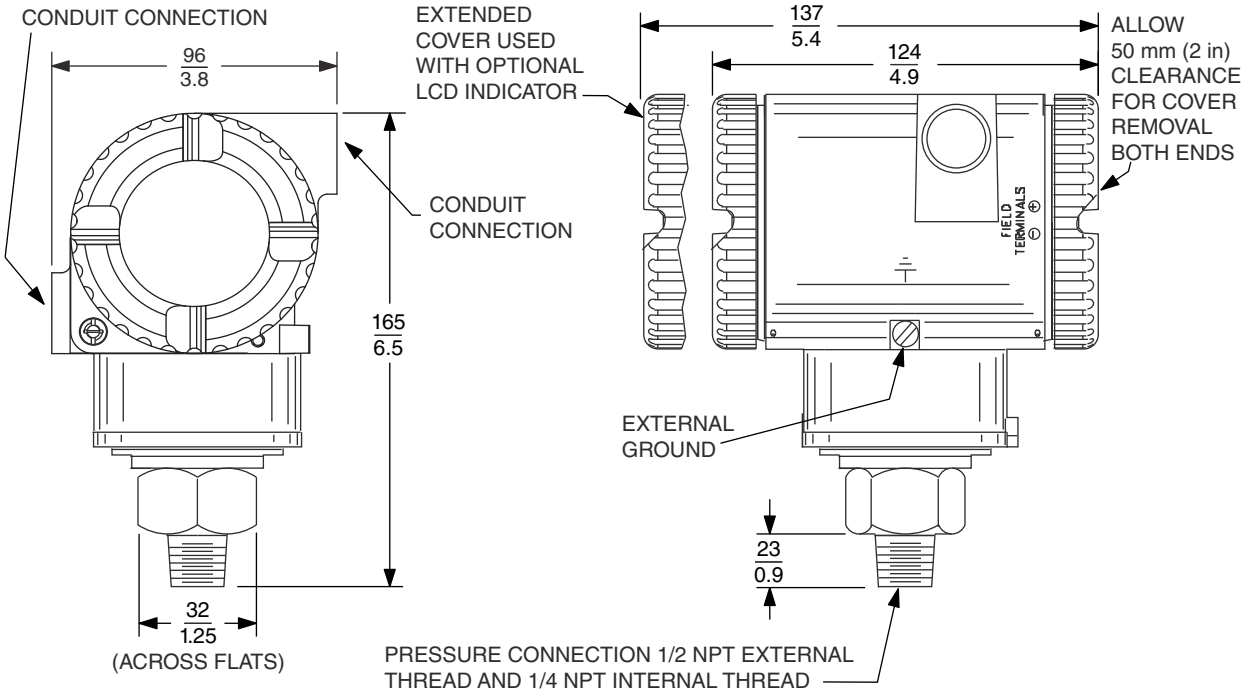

ISSUE DATES

AUG 2017

Vertical lines to the right of text or illustrations indicate areas changed at last issue date.

Schneider Electric Systems USA, Inc.
38 Neponset Avenue
Foxboro, MA 02035
United States of America
http://www.schneider-electric.com

Global Customer Support
Inside U.S.: 1-866-746-6477
Outside U.S.: 1-508-549-2424
https://pasupport.schneider-electric.com

Copyright 2017 Schneider Electric Systems USA, Inc. All rights reserved.

Schneider Electric, Foxboro, TeleBUS, and Modbus are trademarks of Schneider Electric Systems USA, Inc., its subsidiaries, and affiliates. All other trademarks are the property of their respective owners.

Life Is On

Foxboro®

by Schneider Electric