Low Voltage
Secondary Side

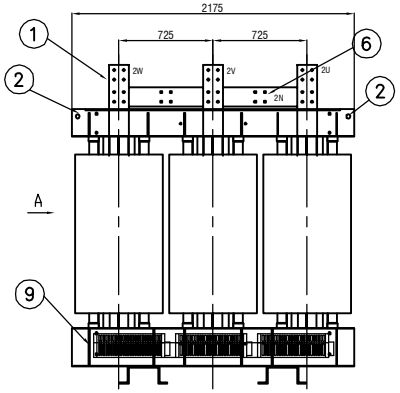

Item 10 Detail

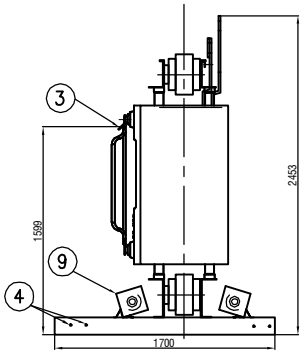

View A

High Voltage
Primary Side

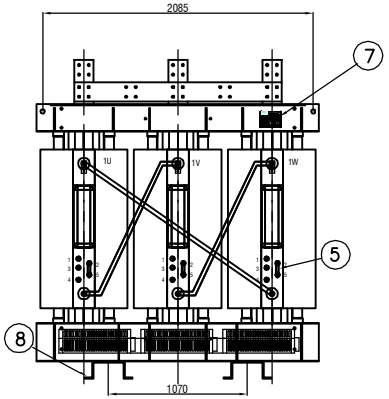

Rear View

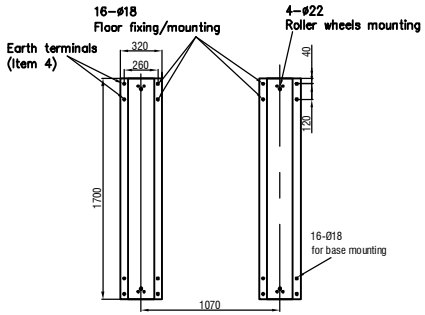

Transformer & Enclosure Assembly
Mounting Base

Winding Diagrams

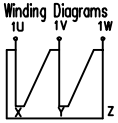

Primary Winding Connection

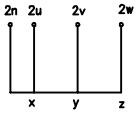

Secondary Winding Connection

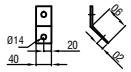

Cu thickness: 4mm
Primary connection terminal
Item 3 Detail

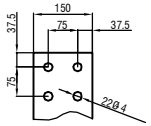

Copper thickness: 15mm
Secondary connection terminal
Item 1 Detail

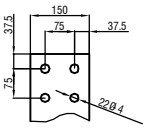

Copper thickness: 15mm
Secondary connection neuter terminal
Item 8 Detail

TRANSFORMER ELECTRICAL DATA	
Rated power kVA	3000
Temporary overload power at AF kVA	4200
Rated primary voltage kV	22
Rated primary insulation level kV	24
Tapping ranges on HV side(off load)	(+2 ~ −2)x2.5%
HV Applied voltage to industrial frequency kV	50
Impulse B.I.L. kV	125
Rated secondary voltage V	415
LV Applied voltage to industrial frequency kV	3
Rated frequency HZ	50
Rated impedance voltage at 75℃ %	7
No-load current %	1.08
No-load losses W	5400
Load losses at 75℃ W	21500
Vector group	Dyn11

TRANSFORMER MECHANICAL DATA	
Primary Winding	Aluminium
Secondary Winding	Aluminium
Cooling method (AN/AF)	AN/AF
Acoustic power LwA at 1m dB	71.5
Rated winding temperature rise K	100
Thermal class	F
Environmental behaviour	E2, C2, F1
Transformer weight (winding & core) kg	6020

TRANSFORMER ACCESSORIES	
Type of temperature control (230Vac)	BWDK3208
Temperature sensors	PT100

Notes:
[1] Quantity : According to the contract
[2] If cooling method AN . The fans and parameters of AF would not provided.

LEGEND	
Item	Material Description
1	Secondary connection busbar
2	Lifting holes
3	Primary connection terminal
4	Earthing terminals ø14
5	HV tapping
6	Neutral connection bar
7	Transformer name plate
8	Transformer mounting base
9	Fans

REV	DESCRIPTION	DESIGNER SIGN./DATE	VERIFIED SIGN./DATE	APPROVED SIGN./DATE
0	ISSUED FOR APPROVAL	David 07.10.2018	FS Meng 07.10.2018	GHL 07.11.2018

CO-ORDINATE SYSTEM: | HEIGHT DATUM: | SCALE: NOT TO SCALE

This document and any information or descriptive matter set out in are confidential and copyright property and must not be disclosed, loaned, copied or used for any purpose whatsoever without prior written permission from Schneider Electric.

Schneider Electric
EcoStruxure
Innovation At Every Level

DRAWN	David	07.10.2018
DESIGNED	David	07.10.2018
DRG CHECK	MFS	07.10.2018
DESIGN CHECK	MFS	07.10.2018
APPROVED	GHL	07.11.2018

TRIHAL TRANSFORMER
MEDIUM VOLTAGE SUBSTATIONS
22kV/415V TRANSFORMER 3000kVA
GENERAL ARRANGEMENT & ELECTRICAL

FILE No. | SHEET: 1 OF 5 | A1
STATUS: ISSUED FOR APPROVAL
DRG No. F300111101 | 0 | SALES ORDER No.

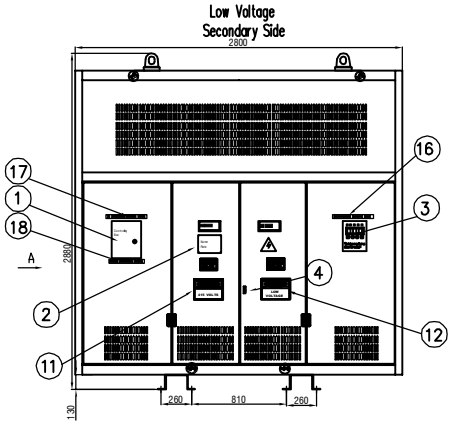

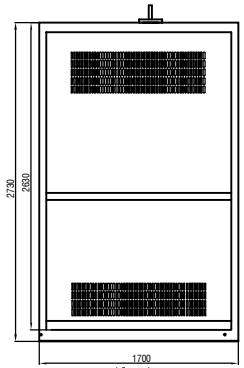

View A

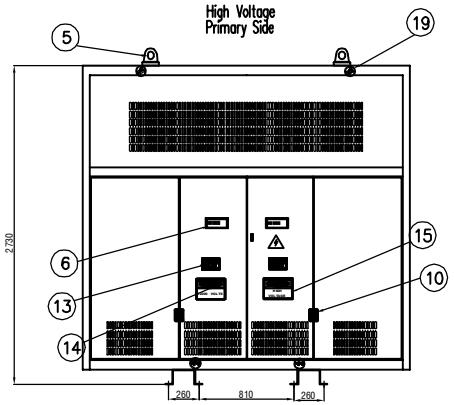

Rear View

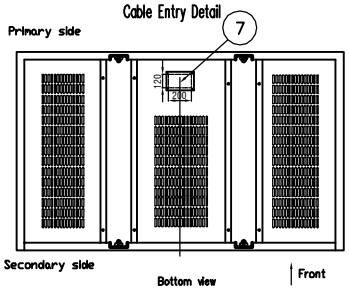

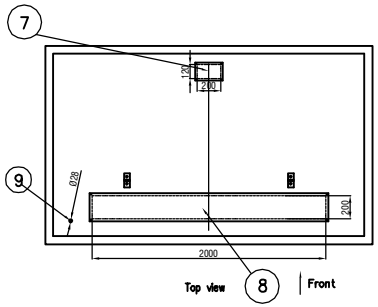

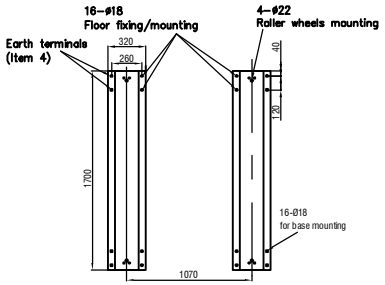

Transformer & Enclosure Assembly
Mounting Base

LEGEND	
Item	Material Description
1	Controlling box
2	Transformer nameplate
3	Temperature controlling unit (TCU)
4	Door lock
5	Lifting points (ears)
6	Viewing windows
7	HV gland plate (4mm aluminum plate)
8	LV gland plate (4mm aluminum plate)
9	Auxiliary LV entry for external control wiring
10	Hinged doors

LEGEND	
11	Danger-secondary voltage label/sign
12	Danger-secondary voltage label/sign
13	Danger-keep out label/sign
14	Danger-primary voltage label/sign
15	Danger-primary voltage label/sign
16	Device label
17	Auxiliary equipment label
18	Auxiliary warning label
19	Lift point sticker
20	
21	

ENCLOSURE MECHANICAL DATA	
Item	Material Description
1	Protection level: IP31
2	Color: RAL7032
3	Enclosure weight: 660kg

Notes:
[1] Top lifting points (ears) for lifting/removing the enclosure only.
Do not use the top lifting points if enclosure is still fixed to the transformer mounting base frame.
[2] Bottom lifting points for lifting the transformer and enclosure as one completed unit.
Fork-lift recommended, refer transformer and enclosure weight to determine the lifting requirement.
[3] Quantity : According to the contract

REV	DESCRIPTION	DESIGNER SIGN. DATE	VERIFIED SIGN. DATE	APPROVED SIGN. DATE
0	ISSUED FOR APPROVAL	David 07.10.2018	MFS 07.10.2018	GHL 07.11.2018

CO-ORDINATE SYSTEM: HEIGHT DATUM: SCALE: NOT TO SCALE

This document and any information or descriptive matter set out in are confidential and copyright property and must not be disclosed, loaned, copied or used for any purpose whatsoever without prior written permission from Schneider Electric.

Schneider Electric
EcoStruxure
Innovation At Every Level

DRAWN	David	07.10.2018
DESIGNED	David	07.10.2018
DRG CHECK	MFS	07.10.2018
DESIGN CHECK	MFS	07.10.2018
APPROVED	GHL	07.11.2018

TRIHAL TRANSFORMER
MEDIUM VOLTAGE SUBSTATIONS
22kV/415V TRANSFORMER 3000kVA
GENERAL ARRANGEMENT & ELECTRICAL

FILE No. SHEET: 2 OF 5 A4
STATUS: ISSUED FOR APPROVAL
DRG No. F300111101 0 SALES ORDER No.

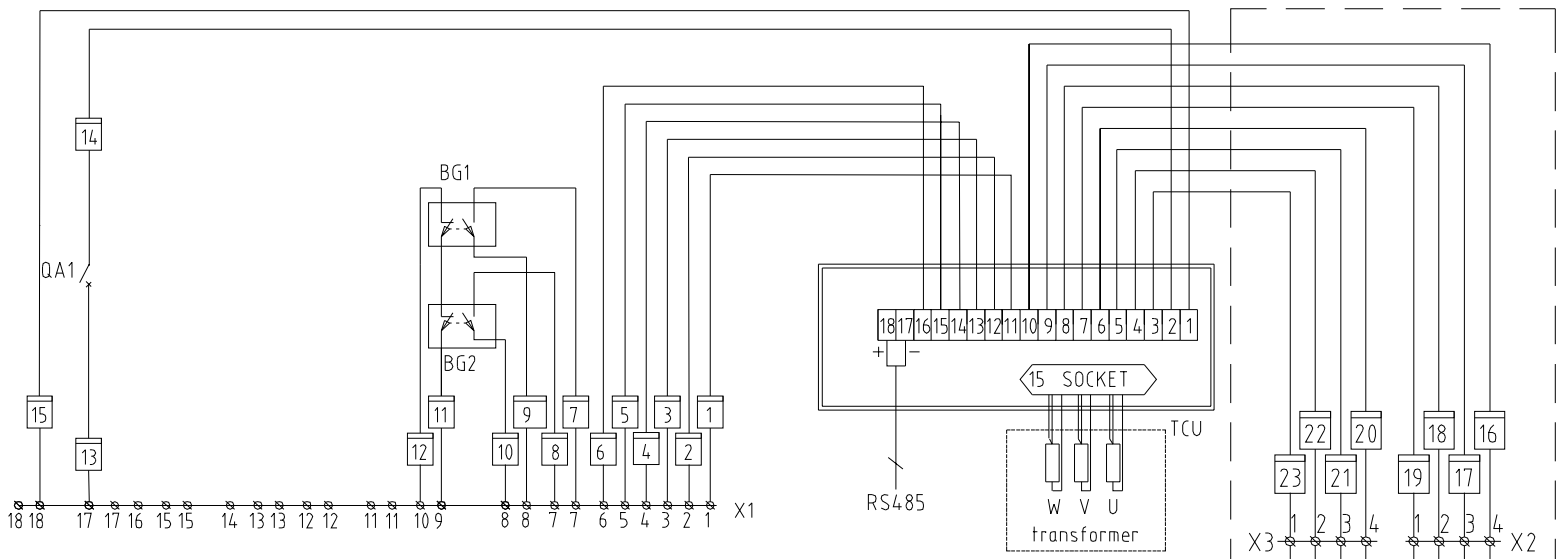

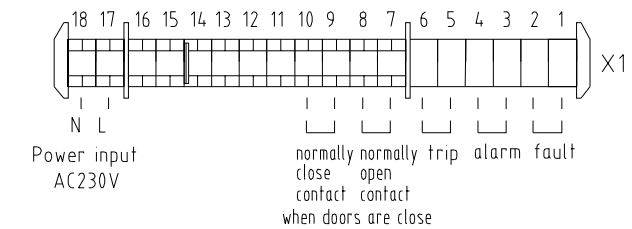

Note:1.TCU terminal 17.18 is optional, and it is not provided when RS232/RS485 communication signals are not required.

2.If cooling method AN . The fans would not be included in the diagram.

LEGEND

SYMBOL	CODE	DESCRIPTION	SYMBOL	CODE	DESCRIPTION
	BG	limit switch			End bracket
		normally close contact			terminal UK 3 N
		normally open contact			terminal UDK 3
	QA	MCB			wire label
	GQ	fan			jumper
		sensor PT100/PTC		TCU	temperature controller
		node			Seperating plate TS
		partition plate ATP			

REV	DESCRIPTION	DESIGNER SIGN./DATE	VERIFIED SIGN./DATE	APPROVED SIGN./DATE
0	ISSUED FOR APPROVAL	David 07.10.2018	MFS 07.10.2018	GHL 07.11.2018

CO-ORDINATE SYSTEM: | HEIGHT DATUM: | SCALE: NOT TO SCALE

This document and any information or descriptive matter set out in are confidential and copyright property and must not be disclosed, loaned, copied or used for any purpose whatsoever without prior written permission from Schneider Electric.

Schneider Electric
EcoStruxure Innovation At Every Level

DRAWN	David	07.10.2018
DESIGNED	David	07.10.2018
DRG CHECK	MFS	07.10.2018
DESIGN CHECK	MFS	07.10.2018
APPROVED	GHL	07.11.2018

TRIHAL TRANSFORMER
MEDIUM VOLTAGE SUBSTATIONS
22kV/415V TRANSFORMER 3000kVA
GENERAL ARRANGEMENT & ELECTRICAL

FILE No. | SHEET: 3 OF 5 | A1
STATUS: ISSUED FOR APPROVAL
DRG No. F300111101 | 0 | SALES ORDER No.

Schneider Electric

Schneider (Suzhou)Transformers Co., Ltd.

Trihal

Dry-type Cast Resin Transformer

Applicable standard: IEC60076-11:2004 | Degree of protection: IP31

Number of phases: 3 | Rated frequency: 50 Hz | Temp. rise: 100 K | Indoor

Short-circuit impedance: % | Connection symbol: Dyn11 | Type of cooling: AN/AF

Insulation level: LI 125 AC 50 /LI / AC 3 kV | Insulation system temperature: F

Tapping position

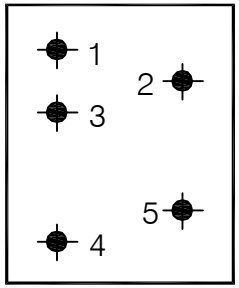

High voltage		Low voltage
connect	voltage	
1-2	23100 V	415 V
2-3	22550 V	
2-5	22000 V	
3-4	21450 V	
4-5	20900 V	

	Rated power	HV current	LV current
AN	3000 kVA	78.7 A	4173.6 A
	Overload power	HV current	LV current
AF	4200 kVA	110 A	5843 A

Fire behavior class: F1
Climate class: C2
Environment class: E2

Mass without enclosure: 6020 kg | Total mass: 6680 kg | Serial number:

Order number: | Order date: | Date of manufacture:

Comply with AS2374.1.2

Note : If cooling method AN . The parameters of AF would not provided.

REV	DESCRIPTION	DESIGNER SIGN./DATE	VERIFIED SIGN./DATE	APPROVED SIGN./DATE
0	ISSUED FOR APPROVAL	David 07.10.2018	MFS 07.10.2018	GHL 07.11.2018

CO-ORDINATE SYSTEM: | HEIGHT DATUM: | SCALE: NOT TO SCALE

This document and any information or descriptive matter set out in are confidential and copyright property and must not be disclosed, loaned, copied or used for any purpose whatsoever without prior written permission from Schneider Electric.

Schneider Electric — EcoStruxure Innovation At Every Level

DRAWN	David	07.10.2018
DESIGNED	David	07.10.2018
DRG CHECK	MFS	07.10.2018
DESIGN CHECK	MFS	07.10.2018
APPROVED	GHL	07.11.2018

TRIHAL TRANSFORMER
MEDIUM VOLTAGE SUBSTATIONS
22kV/415V TRANSFORMER 3000kVA
GENERAL ARRANGEMENT & ELECTRICAL

FILE No. | SHEET: 4 OF 5 | A1
STATUS: ISSUED FOR APPROVAL
DRG No. F300111101 | 0 | SALES ORDER No.

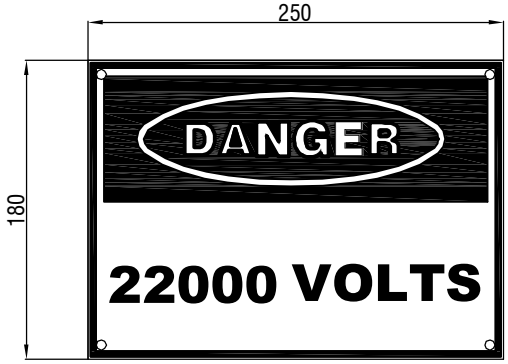

QTY X 1

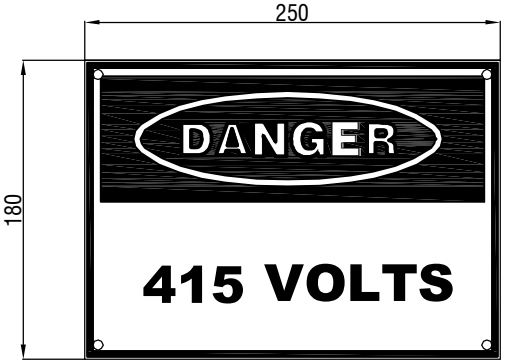

QTY X 1

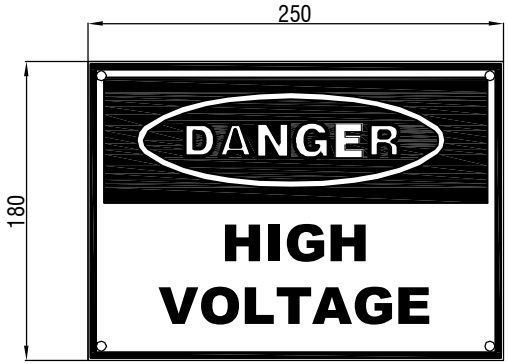

QTY X 1

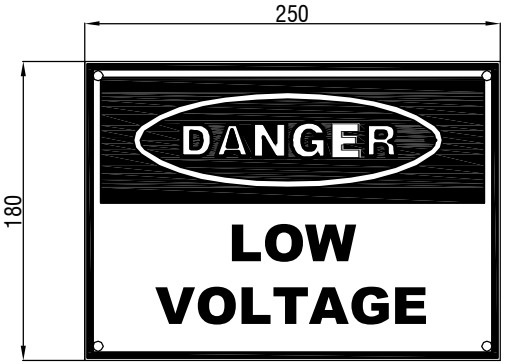

QTY X 1

QTY X 4

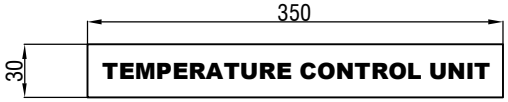

PLATE 15: DEVICE LABEL
(BLACK TEXT – WITH STAINLESS STEEL)
QTY X 1

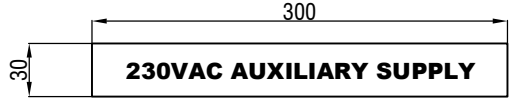

PLATE 17: AUXILIARY WARNING LABEL
(BLACK TEXT – WITH STAINLESS STEEL)
QTY X 1

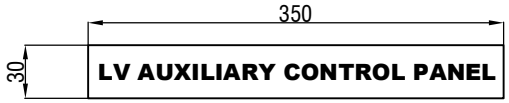

PLATE 16: AUXILIARY EQUIPMENT LABEL
(BLACK TEXT – WITH STAINLESS STEEL)
QTY X 1

REV	DESCRIPTION	DESIGNER SIGN./DATE	VERIFIED SIGN./DATE	APPROVED SIGN./DATE
0	ISSUED FOR APPROVAL	David 07.10.2018	MFS 07.10.2018	GHL 07.11.2018

CO-ORDINATE SYSTEM: | HEIGHT DATUM: | SCALE: NOT TO SCALE

This document and any information or descriptive matter set out in are confidential and copyright property and must not be disclosed, loaned, copied or used for any purpose whatsoever without prior written permission from Schneider Electric.

Schneider Electric
EcoStruxure Innovation At Every Level

DRAWN	David	07.10.2018
DESIGNED	David	07.10.2018
DRG CHECK	MFS	07.10.2018
DESIGN CHECK	MFS	07.10.2018
APPROVED	GHL	07.11.2018

TRIHAL TRANSFORMER
MEDIUM VOLTAGE SUBSTATIONS
22kV/415V TRANSFORMER 3000kVA
GENERAL ARRANGEMENT & ELECTRICAL

FILE No. | SHEET: 5 OF 5 | A1
STATUS: ISSUED FOR APPROVAL
DRG No. F300111101 | 0 | SALES ORDER No.