Medium Voltage Distribution

Vacuum circuit-breaker

Type VA, VAA, VAH, VXA, VXB, VXC

Selection List

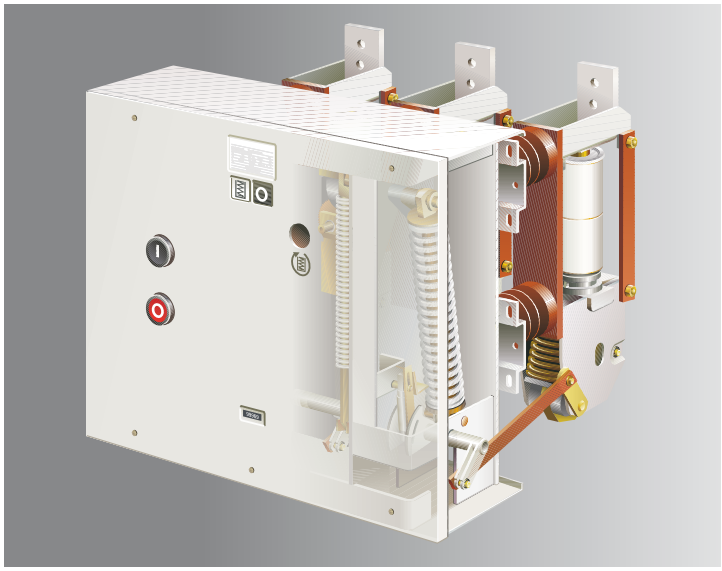

Schneider Electric

Delivery conditions
The General Conditions of Delivery as amended shall apply.

Illustrations
The illustrations are not bin-

Table of contents

Introduction

VXA vacuum circuit-breaker Rated voltage 17.5 kV
Rated short-circuit breaking current 31.5 kA

VAA vacuum circuit-breakers Rated voltage 12 kV
Rated short-circuit breaking current 25 kA

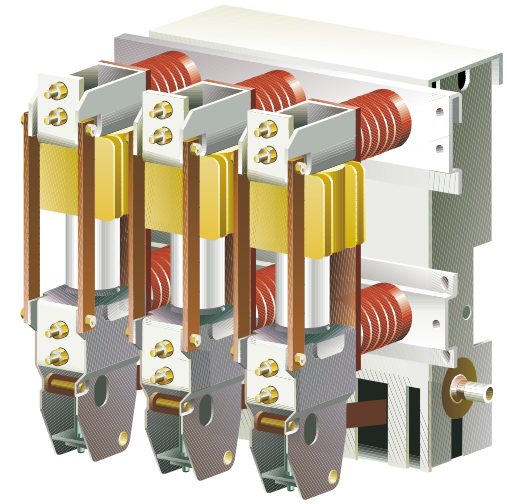

VA vacuum circuit-breakers Rated voltage 12 kV
Rated short-circuit breaking current 50 kA

General Description

VA and VAA vacuum circuitbreakers are front-mounted switches for application in medium-voltage indoor switchgear. They can be fixed installations in switchgear or can be mounted on a switchgear truck, a drawing-unit truck or a drawing unit. In railway applications, vacuum circuitbreakers VXA or VXB (single-/ two-pole units respectively) are used. VXC circuit-breakers which are designed for an especially high number of mechanical and electrical switching operations are suitable to operate electric melting furnaces. Vacuum circuit-breakers are capable of performing all switching operations and tasks encountered in industrial plants and distribution networks or in railway applications, especially for operation of:

short-circuit currents

underground and overhead

lines

motors

transformers

generators

capacitors

Essential Features

- High number of mechanical and electrical switching operations
- No critical current range
- Long service life
- High switching capacity reserve
- Minimum maintenance

Mechanical design

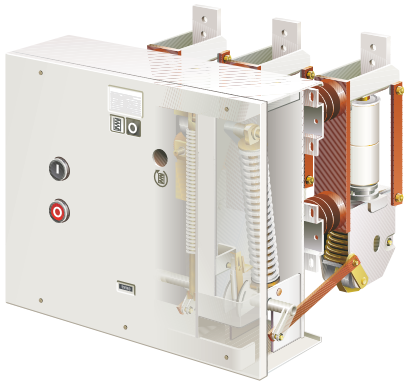

VA 12 kV - View: Operating and drive side

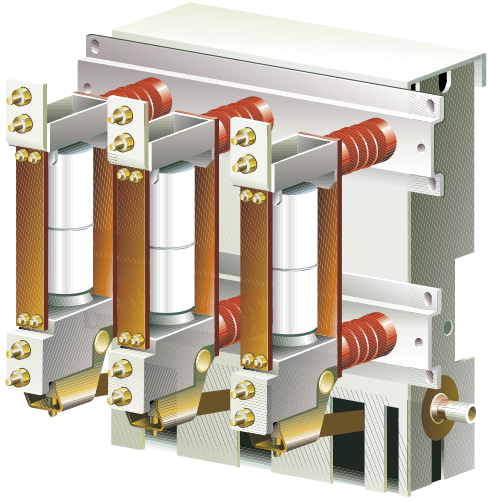

VA 12 kV - View: Pole sections with vacuum interrupter chambers

Application

Vacuum circuit-breakers are designed as front switches. The three-pole VA and VAA vacuum circuit-breakers master all switching cases occurring in medium-voltage systems. The VXA and VXB vacuum types satisfy specific circuit-breaker requirements. VXA vacuum circuit-breakers are single-pole, VXB types feature two poles, both types being mainly suited for railway applications. Threepole vacuum circuit-breakers VXC are used for extremely high operating frequencies, as are required e.g. for furnaces. Vacuum circuit-breakers can be fixed installations in switchgear or can be mounted on a drawing unit, a drawing-unit truck or a switchgear truck.

Design and method of operation

Each of the switch poles with 1 interrupter chamber per phase is fastened to a common base frame with 2 cast-resin post insulators. All drive components, auxiliary and release devices are located in the base frame which is designed as a closed housing. Vacuum circuit- breakers can be equipped with control switches, auxiliary releases, secondary releases and undervoltage releases, as required.
Vacuum circuit-breakers are equipped with a snap-action mechanism with manually or electrically operated spring charging motor and can be equipped at choice with a reclosing facility (auto-reclosure).
Power transmission between the energy-storing device and the switch poles which is required for switching ON and OFF is effected by means of an operating rod made of highquality glass-fibre reinforced insulating material which is largely free of constraints while the vacuum circuit-breaker is ON.

Mechanical design (contd.)

Pole Section

The pole section is of extremely robust design. The solid support provides for a suspension free of external forces for the interrupter chamber. Due to this statically closed support system, the axial forces produced on closing and opening only act on the contact system, whereas the vacuum interrupter chamber remains free of constraints. The power transmission acts from the contact spring onto the moving contact via a lever system with pendulum rod to make sure the closing and opening forces are applied in precisely axial direction.

Drive Mechanism

The drive mechanism has been designed as a making/breaking spring mechanism. The closing spring of the making storedenergy mechanism is charged either via an electric motor installed in the drive housing or by hand using an insertable crank. If the electric motor‘s power supply fails, the spring can still be charged at any time via the crank. The opening spring is charged during the closing operation (ON). Once closing is concluded, the closing spring - now discharged - can be charged again by the spring-charging motor automatically or by hand. In this state, the drive mechanism is ready to perform the operating sequence O–t’–CO. The chargedclosing spring can eitherbe released by hand, by actuation of the ON pushbutton, or by a shunt closingrelease installed in the drive box. The opening procedure is initiated by actuation of the OFF pushbutton or via a shunt opening release, an undervoltage release or a secondary release.

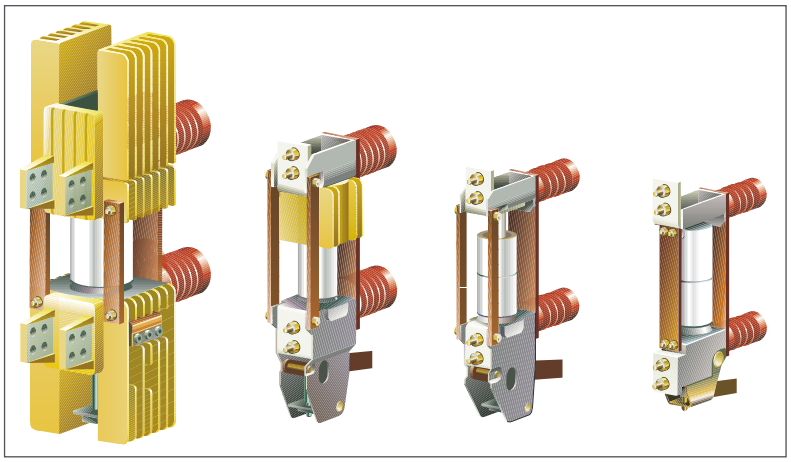

VA pole section

Optional equipment

Releases

Auxiliary release

(Shunt releases)
The coil of the auxiliary release is supplied with exciter voltage from an auxiliary supply source via a release contact. Pulsing can be initiated by hand, via control switches, overcurrent releases or undervoltage releases. If AC voltage is supplied, a rectifier located in the switch housing is installed upstream of the coil. As the coil is designed for short-term excitation only, the exciter circuit is routed via an auxiliary switch contact controlled by the circuit- breaker shaft, thus - once released - interrupting the current circuit.

Secondary release

(Transformer-operated release) Secondary releases are used for automatic release of switching devices in case of short-circuits and overcurrent. Once the protector has reacted, the release is excited by the transformer current, thus causing the switch to be tripped. These releases are supplied for transformer secondary currents of 0.5 A and 5 A.

Undervoltage release

Undervoltage releases are suppliedby the auxiliary sourcepermanently. Whenever the auxiliary current is interrupted or its voltage drops essentially, the switching device is tripped straight away. If the undervoltage release is supplied by a voltage transformer located downstream of the switch, a holding device can be installed which prevents the switch from being released, when it is not yet closed completely.

Control Switches

Auxiliary switch

Auxiliary switches are always actuated directly by the switch shaft via an intermediate linkage, their position always corresponding to that of the main contacts. The circuitbreakers are equipped with an auxiliary switch with 12 contact elements on principle; 8 contact elements have been assigned to the internal switching operation (see circuit diagrams).
For additional current circuits, up to 8 contact elements can be arranged additionally. Moreover, the switching device can be equipped with a mechanically time-delayed contact element (1-pole pulse contact, T 50 ≥ ms).

Push switches

The push switches are snapaction switches mounted to the drive mechanism. Unlike auxiliary switches, push switches are not necessarily dependent on the switching device‘s position, but are actuated e.g. via cams or via various elements attached to the switch. The control switches are wired to the terminal strip; on request, a plug-andsocket connection (with connector and connector base) is also available.

Chassis Frames

Chassis frames for circuitbreakers are manufactured of folded sheet metal or sectional steel, and are equipped with castors. Binding dimension drawings are available on request.

Surge Arresters

Surge arresters must be used to protect the high-voltage motor circuits against overvoltage.
The following data are required to determine the surge arrester:
motor rated voltage
max. ambient temperature transformer neutral point earth fault duration

Vacuum circuit-breaker
with reclosing facility (auto-reclosure)

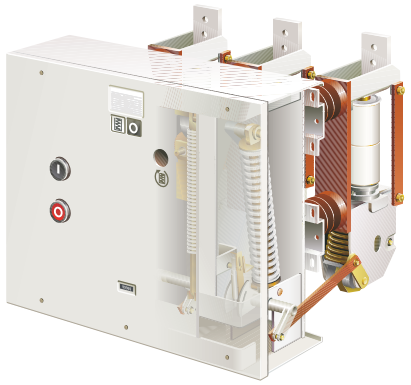

All vacuum circuit-breakers can be supplied with reclosing facility (KU).

Method of operation

If a short-circuit occurs, an overcurrent relay issues a pulse to the shunt opening release, after expiry of the preset instantaneous zone, switching the circuit-breaker OFF.
Once the preset dead time has expired, an ON command is issued to the shunt closing release via a NO contact of the auto-reclosing relay.
If the short-circuit is still present, another OFF command is issued by the overcurrent relay, and the circuit-breaker is switched off for good. The auto-reclosing relay does not issue another ON command.
The vacuum circuit-breaker‘s economic efficiency is based on its excellent maintenance characteristics. The interrupter chamber need not normally be replaced during the switching device‘s service life. The admissible numbers of switching operations at different breaking currents are indicated in the diagrams.
The high value of the service life is considered in comparisons of economic efficiency with other switch principles, especially in applications requiring high operating frequencies. In other cases, maintenance of the drive mechanism and the expense required to this effect for electric isolation decisively affect availability and maintenance costs. The requirement of having a single inspection of the drive mechanism after 10,000 operating cycles or 20 years of operation means that maintenance expense is reduced to a minimum.
The VXC vacuum circuit-breakers can be used for extremely high numbers of operating cycles, e.g. as furnace-type switches.
After 25,000 switching operations, the drive mechanism should be checked and the vacuum interrupter chambers replaced at the same time. The mechanical service life of the VXC vacuum circuit-breaker is 75,000 operating cycles.

Rated operating sequences

Rated operating sequence	Designation	Specifications	Remarks
0–3 min – CO – 3 min – CO	without reclosing facility	IEC 62271-100	see Selection Tables
0–0,3s – CO – 3 min – CO	with reclosing facility	IEC 62271-100	see Selection Tables
CO – 15s – CO		IEC ANSI - Standard C37	see Selection Tables, column "with reclosing facility"
0-0,3s – CO – 15s - CO bis 0-0,3s – CO – 15s - CO – 15s – CO – 15s – CO	reclosing cycles	ANSI - Standard C37	on request
0-15s –C’O – 15s – C’O - 15s – C’O – 15s – C’O	Thunderstorm cycle	Customer specification	on request
0-15s –C’O – 15s – C’O - 15s – C’O – 15s – C’O 15s - C’O – 15s – C’O - 15s – C’O – 15s - C’O – 15 – C’O	Thunderstorm cycle	Customer specification	on request

C Switching ON at rated short-circuit making current
C' Switching ON at rated current
O Switching OFF at rated short-circuit breaking current

Specifications
and tests

Specifications

The three-pole vacuum circuit- breakers VA, VAA, VXC, VAH meet the specifications for AC switchgear for voltages above 1 kV in acc. with IEC 62271-100, and also comply to a large extent, regarding their switching and insulating level, with the requirements of ANSI C37... 1) The single-pole vacuum circuit-breaker VXA/VXB complies with the requirements regarding AC switching devices for voltages above 1 kV in acc. with IEC 62271-100 as well as with the railway standard EN 50152-1.

Tests

Vacuum circuit-breakers have proved their suitability in type tests and in comprehensive test series during the development phase. The tests were performed in the company's own high-performance test laboratories and in neutral institutes such as FGH and KEMA. The tests not only covered compliance with the specified type tests, but also various special requirements, the determination of service life characteristics for the interrupter chambers and the suitability in type-tested switchgear; moreover, complex tests in power supply systems were performed. Reliability, operating safety and the mechanical function of the switching devices were checked in endurance tests.

[1)] on request

Environmental and operating conditions

Circuit-breakers VA, VAA, VAH, VXA, VXB and VXC may only be operated under normal operating conditions according to IEC 60694.
Operation under conditions deviating from these is only admissible upon consultation and with the approval of the manufacturer.

Rated voltage, insulating level, specifications

Voltage designation and insulating ability within the		Rated voltage	Rated lightning impulse withstand voltage	Rated power frequency withstand voltage
Type designation		kV	kV	kV
		4.76	60	19
	12	7.2	60	20
		12	75	28
		13.8	95	38
	17	15	95	38
VA		17.5	95	38
VAA	24	15.4	110	50
VXC		24	125	50
		25.8	150	60
	36	27.6	125	60
		36	170	70
		38	150	80
	38	38	200	80
	17	17.5	170	70
VXA	25	25	170	70
VXB	27	27.5	250	105

Ambient conditions

Ambient conditions	
Temperature class: „Minus 5 indoors" optional: "minus 25 indoors")	
Min./max. ambient temperature	-5 / 40 °C
Average value over 24 hours (max.)	35 °C
Maximum installation altitude above sea-level higher installation altitudes possible on request)	1000 m

Specifications
and tests (contd.)

Numbers of Breaking operations up to the summation current limit

The diagrams define exclusively the admissible summation current limit. They indicate whether the vacuum interrupter chambers need to be replaced. Depending on the rated normal voltage, not all the combinations shown may be possible.
The data for the rated normal current and short-circuit opening current are indicated in the Selection Tables as of page 12.

Depending on the rated normal

Vacuum circuit-breakers VA, VAA, VXA, VXB

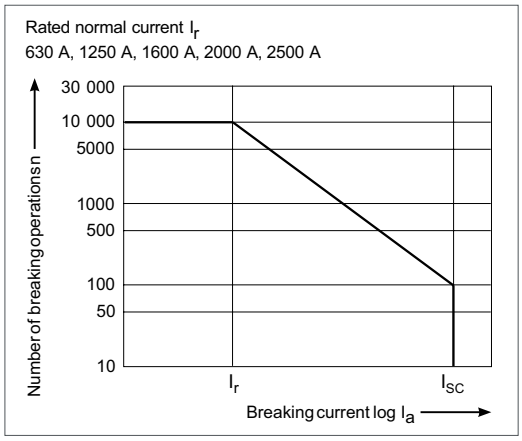

Vacuum circuit-breaker VXC

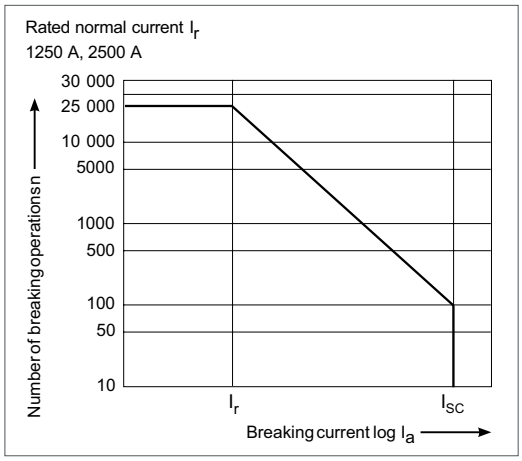

Ir = Rated (normal) current [A]
Isc = Rated short-circuit breaking current [kA]

Vacuum circuit-breaker Typ VA

I_r [A]	I_{sc} [kA]			
	25	31.5	40	50
630		■		
1250		■	■	■
1600	■	■	■	■
2000	■	■	■	■
2500	■	■	■	■

Vacuum circuit-breaker Typ VAA

I_r [A]	I_{sc} [kA]		
	16	20	25
630	■	■	
1250	■	■	■

Vacuum circuit-breaker Typ VXC

I_r [A]	I_{sc} [kA]	
	25	31.5
1250	■	■
2500	■	■

Specifications
and tests (contd.)

Vacuum tester VT 60 (Optional)

The vacuum tester VT 60 can be used to verify the dielectric strength of the contact gap of the vacuum circuit-breakers.
This test is also used to determine indirectly whether the vacuum interrupter chambers are subject to an inside pressure of ≤10^{-2} mbar.
This unit enables the operator
- to determine easily and quickly, without disassembling the switching device,
- without extensive testing
- with a sufficient precision whether the vacuum level in the interrupter chamber still satisfies the requirements.

Special features

- Straightforward handling
- Compact design (unit incl. case approx. in the size of a briefcase)
- Rugged design
- Low weight (approx. 8 kg)
- Low cost of investment

Physical bases of the test method

The dielectric strength of the vacuum contact gap depends on the chamber pressure „P“.
Thus, the vacuum can be checked indirectly by means of voltage measurement.
The test point „A“ has been arranged conveniently so that it features a sufficient distance from point „B“ (state with the chamber filledwith air), but so that the vacuum interrupter chamber is not subjected to an unnecessarily high load.

Performance of the audit

After connecting the vacuum tester VT 60 to the circuitbreaker to be checked, the test can be performed easily and quickly:
- Select the test voltage (40 or 60 kV)
- Switch on power supply; the red warning lamp „Attention
  - high voltage“ lights up.
- At the same time, turn knobs „Test“ with your left and right hands to their stop in the direction of the arrow and wait for a few seconds for the lamps „not faulty“ or „faulty“ to light up.

If the green lamp (not faulty) goes on, the test is completed, the vacuum chamber can be considered to be functional.
- If the red lamp goes on, the test is repeated twice. If the green lamp does not go on even after the 3rd attempt, the vacuum interrupter chamber is considered to be faulty.

The vacuum tester VT 60 thus permits straightforward, quick and reliable testing of highquality switching devices.

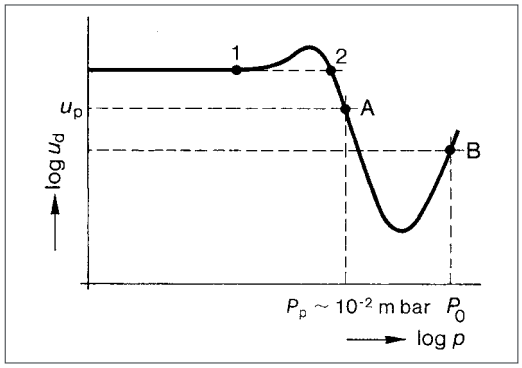

Dielectric strength depending on the chamber pressure
PChamber pressure
P_o Atmospheric pressure
P_p Chamber pressure on passing the voltage test
U_d Disruptive discharge voltage
U_p Test voltage

Technical data of vacuum tester VT 60

System voltage	switchable 220 V WS, 120/130 V WS
Frequency of mains voltage	50/60 Hz
Output voltage (0 …– 10%)	switchable – 40 kV DC voltage – 60 kV DC voltage
Ripple content of DC voltage	≤ 3%
Short circuit current	≤ 33 mA
Discharge time of high-voltage circuit	≤ 0.3 sec.
LV fuse	Micro-fuse 0.5 A slow-blowing
Weight incl. case	approx. 8 kg
Dimensions of case	350 x 315 x 175 mm

Selection tables

Vacuum circuit-breakers VA, VAA 12 kV

Type		Pole center spacing	Rated voltage	Rated insulation level: Rated power frequency withstand voltage	Rated insulation level: Rated lightning impulse withstand voltage	Rated frequency	Rated (normal) current	Rated peak withstand current at 50/60 Hz	Rated short-time current	Rated short-circuit breaking current: Rated short-circuit current at rated voltage in kV		Rated short-circuit breaking current: Percentage value of the DC component	Cable breaking current	Low ind. currents	Breaking current under out-of-phase conditions
									3 s	7.2	12				
		mm	kV	kV	kV	Hz	A	kA	kA	kA	kA	%	A	A	kA
VAA	506/12	160	12	28	75	50/60	630 *)	50/52	20	20	20	40	25	10 A for trans-formers in no-load state	5
VAA	506/12	210				50/60	630 *)								
VAA	5012/12	160				50/60	1250								
VAA	5012/12	210				50/60	1250								
VAA	636/12	160	12	28	75	50/60	630 *)	63/65	25	25	25	40	25		6,3
VAA	636/12	210				50/60	630 *)								
VAA	6312/12	160				50/60	1250								
VAA	6312/12	210				50/60	1250								
VA	806/12	160	12	28	75	50/60	630 *)	80/82	31,5	31,5	31,5	38	25		8
VA	8012/12	160				50/60	1250								
VA	806/12	210	12	28	75	50/60	630 *)	80/85	31,5/34	34	31,5	41	25		8
VA	8012/12	210				50/60	1250								
VA	8016/12	210				50/60	1600								
VA	8020/12	210				50/60	2000								
VA	8025/12	210				50/60	2500								
VA	8031/12	210				50	3000								
VA	8031/12	210				60	2900								
VA	8031/12	275				50/60	3150								
VA	10012/12	210	12	28	75	50/60	1250	100/104	40	40	40	41	25		10
VA	10016/12	210				50/60	1600								
VA	10020/12	210				50/60	2000								
VA	10025/12	210				50/60	2500								
VA	10031/12	210				50	3000								
VA	10031/12	210				60	2900								
VA	10031/12	275				50/60	3150								
VA	12512/12	210	12	28	75	50/60	1250	125/130	50	50	50	40	25		12,5
VA	12516/12	210				50/60	1600								
VA	12520/12	210				50/60	2000								
VA	12525/12	210				50/60	2500								
VA	12531/12	210				50	3000								
VA	12531/12	210				60	2900								
VA	12531/12	275				50/60	3150								

*) promised also for 800 A
1) in case of class „minus 25 indoors“: extend closing time and opening time by 3 ms
2) admissible tolerance range, no manufacturing tolerance, current value of one specimen, see routine test report

Selection tables (contd.)

Rated operating sequence				Switching operations without inspection				Operating times with release				Command times with release					
				mechanical		electrical		25 W	160 W	160 W		25 W	160 W	160 W			
O - 3 min - CO - 3 min - CO	O - 0.3 s - CO - 3 min - CO	CO - 15 s - CO	O - 0.3 s - CO - 15 s - CO	Drive	Interrupter chamber	with rated (normal) current	with rated short-circuit current	Min./max. opening time	Min./max. opening time[2]	Min./max. closing time[2]	Arc duration	OFF	OFF	ON	Charging time for motor drive mechanism	Partitions	Weight
								ms	ms	ms	ms	ms	ms	ms	s		kg
■	■	■	■	10000	30000	10000	100	45/65	31/50	35/70	6 bis 12	50	20	20	≤ 5	■ – ■ –	105
■	■	■	■	10000	30000	10000	100	45/65	31/50	35/70	6 bis 12	50	20	20	≤ 5	■ – ■ –	105
■	■	■	■	10000	30000	10000	100	45/65	31/50	35/70	6 bis 12	50	20	20	≤ 9 ≤ 9	■ ■	115 115
■	■	■	■	10000	30000	10000	100	45/65	30/50	35/70	6 bis 12	50	20	20	≤ 9 ≤ 9 ≤ 9 ≤ 12 ≤ 12	– – – – ■	115 115 115 125 125
■	■	■													≤ 12 ≤ 12 ≤ 12	■ ■ ■	140 140 140
■	■	■	■	10000	30000	10000	100	45/65	30/50	35/70	6 bis 12	50	20	20	≤ 9 ≤ 9 ≤ 12 ≤ 12	– – – ■	115 115 125 125
■	■	■													≤ 12 ≤ 12 ≤ 12	■ ■ ■	140 140 140
■	■	■		10000	30000	10000	100	45/65	30/50	35/70	6 bis 12	50	20	20	≤ 12 ≤ 12 ≤ 12 ≤ 12 ≤ 12 ≤ 12 ≤ 12	– – – – ■ ■ ■	125 125 125 125 140 140 140

Selection tables (contd.)

Vacuum circuit-breakers VA, VAA 17.5 kV

Type		Pole center spacing	Rated voltage	Rated insulation level: Rated power frequency withstand voltage	Rated insulation level: Rated lightning impulse withstand voltage	Rated frequency	Rated (normal) current	Rated peak withstand current at 50/60 Hz	Rated short-time current 3 s	Rated short-circuit breaking current: Rated short-circuit current at rated voltage in kV 15	Rated short-circuit breaking current: Rated short-circuit current at rated voltage in kV 17.5	Rated short-circuit breaking current: Percentage value of the DC component	Cable breaking current	Low ind. currents	Breaking current under out-of-phase conditions
		mm	kV	kV	kV	Hz	A	kA	kA	kA	kA	%	A	A	kA
VAA	506/17	160				50/60	630 *)								
VAA	506/17	210				50/60	630 *)								
VAA	506/17	275	17	38	95	50/60	630 *)	50/52	20		20	40	31.5		5
VAA	5012/17	160				50/60	1250								
VAA	5012/17	210				50/60	1250								
VAA	5012/17	275				50/60	1250								
VAA	636/17	160				50/60	630 *)								
VAA	636/17	210				50/60	630 *)								
VAA	636/17	275				50/60	630 *)								
VAA	6312/17	160	17	38	95	50/60	1250	63/65	25		25	40	31.5		6,3
VAA	6312/17	210				50/60	1250							10 A for trans-formers in no-load state	
VAA	6312/17	275				50/60	1250								
VA	6320/17	210				50/60	2000								
VA	8012/17	210				50/60	1250								
VA	8012/17	275				50/60	1250								
VA	8016/17	210				50/60	1600								
VA	8016/17	275				50/60	1600	80/82	31.5		31.5	41	31.5		8
VA	8020/17	210				50/60	2000								
VA	8020/17	275	17	38	95	50/60	2000								
VA	8025/17	210				50/60	2500								
VA	8025/17	275				50/60	2500								
VA	8031/17	210				50	3000								
VA	8031/17	210				60	2900	80/82	31.5		31.5	42	31.5		8
VA	8031/17	275				50/60	3150								
VA	10020/17	210	17	38	95	50/60	2000	100/104	40		40	41	31.5		10
VA	10025/17	210				50/60	2500								

*) promised also for 800 A
1) in case of class „minus 25 indoors“: extend closing time and opening time by 3 ms
2) adm. tolerance range, no manufacturing tolerance, current value of one specimen, see routine test report

Selection tables (contd.)

Rated operating sequence				Number of operating cycles without overhaul				Operating times with release				Command times with release					
				mechanical		electrical		25 W	160 W	160 W		25 W	160 W	160 W			
O - 3 min - CO - 3 min - CO	O - 0.3 s - CO - 3 min - CO	CO - 15 s - CO	O - 0.3 s - CO - 15 s - CO	Drive mechanism	Interrupter chamber	with rated (normal) current	with rated short-circuit current	Min./Max. opening time 2)	Min./Max. opening time 2)	Min./Max. closing time 2)	Arc duration	OFF	OFF	ON	Charging time for motor drive mechanism	Partitions	Weight
								ms	ms	ms	ms	ms	ms	ms	s		kg
■	■	■	■	10000	30000	10000	100	45/65	31/50	35/70	6 to 14	50	20	20	≤ 5	■	105
																–	
																–	
																■	
																–	
																–	
■	■	■	■	10000	30000	10000	100	45/65	31/50	35/70	6 to 14	50	20	20	≤ 5	■	105
																–	
																–	
																■	
																–	
																–	
															≤ 12	■	130
■	■	■	■	10000	30000	10000	100	45/65	30/50	35/70	6 to 14	50	20	20	≤ 9	–	115
															≤ 9	–	115
															≤ 9	■	115
															≤ 9	–	115
															≤ 12	■	125
															≤ 12	–	125
															≤ 12	■	125
															≤ 12	–	125
															≤ 12	■	140
■	■	■		10000	30000	10000	100	45/65	30/50	35/70	6 to 14	50	20	20	≤ 12	■	140
															≤ 12	■	140
■	■	■	■	10000	30000	10000	100	45/65	30/50	35/70	6 to 14	50	20	20	≤ 12	■	125
															≤ 12	■	125

Selection tables (contd.)

Vacuum circuit-breakers VA, VAA 24 kV

Type		Pole center spacing	Rated voltage	Rated insulation level: Rated power frequency withstand voltage	Rated insulation level: Rated lightning impulse withstand voltage	Rated frequency	Rated (normal) current	Rated peak withstand current at 50/60 Hz	Rated short-time current 3 s	Rated short-circuit breaking current: Rated short-circuit current at rated voltage in kV	Rated short-circuit breaking current: Percentage value of the DC component	Cable breaking current	Low ind. currents	Breaking current under out-of-phase conditions
		mm	kV	kV	kV	Hz	A	kA	kA	kA	%	A	A	kA
VAA	406/24	210	24	50	125	50/60	630 *)	40/42	16	16	33	31.5	10 A for trans-for-mers in no-load state	–
VAA	406/24	275				50/60	630 *)							
VAA	4012/24	210				50/60	1250							
VAA	4012/24	275				50/60	1250							
VAA	506/24	210	24	50	125	50/60	630 *)	50/52	20	20	33	31.5		–
VAA	506/24	275				50/60	630 *)							
VAA	5012/24	210				50/60	1250							
VAA	5012/24	275				50/60	1250							
VAA	6312/24	210	24	50	125	50/60	1250	63/65	25	25	41	31.5		–
VAA	6312/24	275				50/60	1250							
VA	6316/24	210				50/60	1600							
VA	6316/24	275				50/60	1600							
VA	6320/24	210				50/60	2000							
VA	6320/24	275				50/60	2000							
VA	6325/24	275				50/60	2500							
VA	6325/24	210	24	50	125	50/60	2000	80/82	31.5	31.5	41	31.5		–
VA	8020/24	275				50/60	2000							
VA	8025/24	275				50/60	2500							

*) promised also for 800 A
1) adm. tolerance range, no manufacturing tolerance, current value of one specimen, see routine test report
2) Partitions required for installation of circuit-breaker in WBA

Selection tables (contd.)

Rated operating sequence				Number of operating cycles without overhaul				Operating times with release				Command times with release					
				mechanical		electrical		25 W	160 W	160 W		25 W	160 W	160 W			
O - 3 min - CO - 3 min - CO	O - 0.3 s - CO - 3 min - CO	CO - 15 s - CO	O - 0.3 s - CO - 15 s - CO	Drive mechanism	Interrupter chamber	with rated (normal) current	with rated short-circuit current	Min./Max. opening time	Min./Max. opening time	Min./Max. closing time[1]	Arc duration	OFF	OFF	ON	Charging time for motor drive mechanism	Partitions	Weight
								ms	ms	ms	ms	ms	ms	ms	s		kg
■	■	■	■	10000	30000	10000	100	45/65	30/50	35/65	6 to 14	50	–	20	≤ 5	■ –[2] ■ –[2]	105
■	■	■	■	10000	30000	10000	100	45/65	30/50	35/65	6 to 14	50	–	20	≤ 5	■ –[2] ■ –[2]	105
■	■	■	■	10000	30000	10000	100	45/65	30/50	35/65	6 to 14	50	20	20	≤ 5 ≤ 5 ≤ 9 ≤ 9 ≤ 12 ≤ 12 ≤ 12	■ –[2] ■ ■ ■ –[2] ■	105 105 122 122 130 130 130
■	■	■	■	10000	30000	10000	100	45/65	30/50	35/65	6 to 14	50	20	20	≤ 12 ≤ 12 ≤ 12	■ – ■	130

Selection tables (contd.)

Vacuum circuit-breakers VA 36 kV

Type	Pole center spacing	Rated voltage	Rated insulation level: Rated power frequency withstand voltage	Rated insulation level: Rated lightning impulse withstand voltage	Rated frequency	Rated (normal) current	Rated peak withstand current at 50/60 Hz	Rated short-time current 3 s	Rated short-circuit breaking current: Rated short-circuit current at rated voltage in kV	Rated short-circuit breaking current: Percentage value of the DC component	Cable breaking current	Low ind. currents	Breaking current under out-of-phase conditions
	mm	kV	kV	kV	Hz	A	kA	kA	kA / 36 kA	%	A	A	kA
VA 6312/36	275	36	70	170	50//60	1250	65	25	25	33	50	10 A for trans-formers in no-load state	6.3
VA 6312/36	400				50/60	1250							
VA 8012/36	275	36	70	170	50/60	1250	82	31.5	31.5	40	50		6.3
VA 8012/36	400				50/60	1250							
VA 8020/36	275				50/60	2000[3]							
VA 8020/36	400				50/60	2000							
VA 8025/36	400				50/60	2500							
VA 10020/36	275	36	70	170	50/60	2000[3]	104	40	40	40	50		6.3
VA 10020/36	400				50/60	2000							
VA 10025/36	400				50/60	2500							

[1] in case of class „minus 25 indoors“: extend closing time and opening time by 3 ms
[2] adm. tolerance range, no manufacturing tolerance, current value of one specimen, see routine test report
[3] at 60 Hz 2000 A only possible at max. ambient temperatures of 38 °C

Selection tables (contd.)

Rated operating sequence				Number of operating cycles without overhaul				Operating times with release				Command times with release					
				mechanical		electrical		25 W	160 W	160 W		25 W	160 W	160 W			
O - 3 min - CO - 3 min - CO	O - 0.3 s - CO - 3 min - CO	CO - 15 s - CO	O - 0.3 s - CO - 15 s - CO	Drive mechanism	Interrupter chamber	Rated (normal) current	with rated short-circuit current	Min. Max. opening time 2) ms	Min. Max. opening time 2) ms	Min. Max. closing time 2) ms	Arc duration ms	OFF ms	OFF ms	ON ms	Charging time for motor drive mechanism s	Partitions	Weight kg
■	■	■	■	10000	30000	10000	100	45/65	–	40/70	8 to 14	50	20	20	≤ 9	■ –	
■	■	■	■	10000	30000	10000	100	45/65	31/45	40/70	8 to 14	50	20	20	≤ 12	■ – ■ – ■	on demand
■	■	■		10000	30000	10000	100	45/65	31/45	40/70	8 to 14	50	20	20	≤ 12	■ – ■	

Selection tables (contd.)

Vacuum circuit-breakers for railway applications VXA, B, 17.5 / 25 / 27.5 kV

Type	Pole center spacing	Rated voltage	Rated insulation level: Rated power frequency withstand voltage	Rated insulation level: Rated lightning impulse withstand voltage	Rated frequency	Rated (normal) current	Rated peak withstand current at 50/60 Hz	Rated short-time current 3 s	Rated short-circuit breaking current: Rated short-circuit current at rated voltage in kV	Rated short-circuit breaking current: Percentage value of the DC component	Low ind. currents	Breaking current under out-of-phase conditions	Rated operating sequence: O - 5 s - CO 4)	Rated operating sequence: O - 0.3 s - CO - 1 min - CO	Rated operating sequence: CO - 15 s - CO	Rated operating sequence: O - 0.3 s - CO - 15 s - CO 3)
	mm	kV	kV	kV	Hz	A	kA	kA	kA	%	A	kA				
VXA 5016/17	–	17.5	70	170	16 2/3 or 25	1600	50	20	20	51			■		■	
VXA 6316/17	–					1600	63	25	25	51			■		■	
VXA 6320/17	–					2000	63	25	25	51			■		■	
VXA 8020/17	–					2000	80	31.5	31.5	51			■		■	
VXA 8025/17	–					2500	80	31.5	31.5	51			■		■	
VXA 10020/17	–	17.5	70	170	16 2/3 or 25	2000	100	40	40	51			■		■	
VXA 10025/17	–					2500	100	40	40	51			■		■	
VXA 6316/27	–	27.5	70	170	50/60	1600	63	25	25	51		6.3	■	■	■	■
VXA 8016/27	–					1600	80	31.5	31.5	51		6.3	■	■	■	■
VXA 8020/27	–					2000	80	31.5	31.5	51		6.3	■	■	■	■
VXA 8025/27	–					2000	80	31.5	31.5	51		6.3	■	■	■	■
VXA 6320/17-125	–	17.5	50	125	16 2/3	2000	63	25	25	51			■		■	
VXA 6312/27-250	–	25/ 27.5	95/ (105)	250	50/60	1250	63	25	25	41		12.5	■	■	■	■
VXA 8020/27-250	–					2000	80	31.5	31.5	41		12.5	■	■	■	■
VXB 6312/27-250	550	25/ 27.5	95/ (105)	250	50/60	1250	63	25	25	41		12.5	■	■	■	■
VXB 8020/27-250	550					2000	80	31.5	31.5	41		12.5	■	■	■	■

1) in case of class „minus 25 indoors“: extend closing time and opening time by 3 ms
2) adm. tolerance range, no manufacturing tolerance, current value of one specimen, see routine test report
3) on request
4) Test operating sequence cannot be tested directly under certain conditions on 16 2/3 or 25 Hz test equipment

Selection tables (contd.)

Number of operating cycles without overhaul				Operating times instantaneous trippin				Command times instantaneous trippi						
mechanical		electrical		with	without				with	without				
Drive mechanism	Interrupter chamber	with rated (normal) current	with rated short-circuit curent	Opening time[2] ms	Opening time[2] ms	Closing time[2] ms	Opening time without instantaneous tripping ms	Opening time with instanta-neous tripping	OFF ms	OFF ms	ON ms	Charging time for motor dri-ve mechanism s	Partitions	Weight kg
10000	30000	10000	100 50	10 to 17	20 to 40	40 to 55	15 to 82	25 to 105	5	20	20	≤ 12		on demand
10000	30000	10000	50	10 to 17	20 to 40	40 to 55	10 to 82	25 to 105	5	20	20	≤ 12		
10000	30000	10000	100	–	20 to 40	40 to 55	–	25 to 58	–	20 20 20 20	20 20 20 20	≤ 12 ≤ 12 ≤ 12 ≤ 12		
20000	30000	20000	100	–	20 to 40	40 to 55	–	25 to 105	–	20	20	≤ 12		
10000	30000	10000	100	– –	30 to 45	40 to 55	– –	35 to 58	– –	20 20	20 20	≤ 12 ≤ 12		
10000	30000	10000	100	– –	30 to 45	40 to 55	– –	35 to 58	– –	20 20	20 20	≤ 12 ≤ 12	■ ■	

Vacuum circuit-breakers for high numbers of switching operations VXC, 24 / 36 / 38 kV

Type	Pole center spacing	Rated voltage	Insulating level: Rated power frequency withstand voltage	Insulating level: Rated lightning impulse withstand voltage	Rated frequency	Rated (normal) current	Rated peak withstand current	Rated short-time current 3 s	Rated short-circuit breaking current: Rated short-circuit current at rated voltage in kV	Rated short-circuit breaking current: Percentage value of the DC component	Rated transient recovery voltage: Peak value (first-pole-to-clear factor 1.5)	Rated transient recovery voltage: U_c at rated voltage in kV	Rated transient recovery voltage: Rate of rise	Rated cable-charging breaking current	Low ind. currents	Breaking current under out-of-phase conditions
	mm	kV	kV	kV	Hz	A	kA	kA	kA	%	kA	kV	kV/µs	A	A	kA
VXC 6312/24	210	24	50	125	50/60	1250	63/65	25	25	40	–	41	0.47	31.5	–	6.3
VXC 6312/24	275					1250						41				6.3
VXC 6325/24	275					2500						41				6.3
VXC 6312/36	275	36	70	170	50/60	1250	63/65	25	25	40	–	62	0.57	50	–	6.3
VXC 6312/36	400					1250		25	25			62				6.3
VXC 6325/36	400					2500		25	25			62				6.3
VXC 8012/36	275					1250	80/82	31.5	31.5			62				7.9
VXC 8012/36	400					1250		31.5	31.5			62				7.9
VXC 8025/36	400					2500		31.5	31.5			62				7.9
VXC 6312/38-200	400	38	95	200	50/60	1250	63/65	25	25	40	–	71.7	1.32	50	–	6.3
VXC 6325/38-200	400					2500	63/65	25	25			71.7				6.3
VXC 8012/38-200	400					1250	80/82	31.5	31.5			71.7				7.9
VXC 8025/38-200	400					2500	80/82	31.5	31.5			71.7				7.9
VXC 10012/38-200	400					1250	100/104	40	40			71.7				–
VXC 10025/38-200	400					2500	100/104	40	40			71.7				–

[1] in case of class „minus 25 indoors“: extend closing time and opening time by 3 ms
[2] adm. tolerance range, no manufacturing tolerance, current value of one specimen, see routine test report

Selection tables (contd.)

Rated operating sequence				Switching operations without inspection				Operating times with release			Command tims with release					
				mechanical		electrical		25 W	160 W	160 W	25 W	160 W	160 W			
O - 3 min - CO - 3 min - CO	O - 0.3 s - CO - 3 min - CO	CO - 15 s - CO	O - 0.3 s - CO - 15 s - CO	Drive	Interrupter chamber	with rated (normal) current	with rated short-circuit current	Opening time 2)	Opening time 2)	Closing time 2)	OFF	OFF	ON	Charging time for motor drive mechanism	TrennwPartitionsände	Weight
								ms	ms	ms	ms	ms	ms	s		kg
■	■	■	■	25000	30000	25000	100	45-65	31-45	40-70	50	20	20	≤ 12	■	122
															–	140
															■	140
■	■	■	■	25000	30000	25000	100	45-65	31-45	40-70	50	20	20	≤ 12	■	130
															–	160
															■	160
															■	130
															–	160
															■	160
■	■	■	■	25000	30000	25000	100	45-65	31-45	40-70	50	20	20	≤ 12	■	160
															■	160
															■	160
															■	160
															■	160
															■	160

High-capacity vacuum circuit-breakers for high currents VAH 12 kV, 13.8 kV (15.8), 17.5 kV

Type	Pole center spacing	Rated voltage	Rated insulation level: Rated power frequency withstand voltage	Rated insulation level: Rated lightning impulse withstand voltage	Rated frequency	Rated (normal) current	Rated peak withstand current at 50/60 Hz	Rated short-time current 3 s	Rated short-circuit breaking current: Rated short-circuit current at rated voltage in kV	Rated short-circuit breaking current: Percentage value of the DC component	Rated transient recovery voltage: Peak value (first-pole-to-clear factor 1.5) at rated Voltage	Rated transient recovery voltage: Rate of rise	Cable breaking current	Low ind. currents	Breaking current under out-of-phase conditions
	mm	kV	kV	kV	Hz	A	kA	kA	kA	%	kV	kV/µs	A	A	kA
VAH 12-50-40-27 **)	275				50/60	4000				50	20.6	0.34			
VAH 12-50-50-27 **)	275				50	5000 2)	125	50	50				25		
VAH 12-50-50-27 **)	275				60	4750 4)				15	23.7	4.0			
VAH 12-63-12-27	275				50	1250									
VAH 12-63-25-27	275				50	2500			63	15	20.6	0.34			
VAH 12-63-31-27	275	12	28	75	50	3150									
VAH 12-63-40-27	275		(42)		50/60	4000	160	63					25		
VAH 12-63-50-27	275				50	5000 2)			63	15	20.6	0.34			
VAH 12-63-50-27	275				60	4750 4)				also possible					
VAH 12-63-80-27 *)	275				50	8000 3)			50	15	23.7	4.0			
VAH 12-63-80-27 *)	275				60	7700 5)									
VAH 13,8-63-12-27	275				50	1250									
VAH 13,8-63-25-27	275				50	2500			63	15	23.7 (27.1)	0.39 (0.40)			
VAH 13,8-63-31-27	275				50	3150								on re-quest	
VAH 13,8-63-40-27	275	13.8	38	95	50	4000	160	63	63	15	23.7	0.39	31.5		
VAH 13,8-63-50-27	275	(15.8)	(42)		50	5000 2)					(27.1)	(0.40)			
VAH 13,8-63-50-27	275				60	4750 4)				also possible					
VAH 13,8-63-80-27 *)	275				50	8000 3)			50 on	15	27.1	4.0			
VAH 13.8-63-80-27 *)	275				60	7700 5)			13.8 kV						
VAH 17,5-50-12-27 **)	275				50/60	1250									
VAH 17,5-50-25-27 **)	275				50/60	2500									
VAH 17,5-50-31-27 **)	275				50	3150									
VAH 17,5-50-31-27 **)	275	17.5	38	95	60	3000									
VAH 17,5-50-40-27 **)	275		(42)		50/60	4000	125	50	50	15	30	0.42	31.5		
VAH 17,5-50-50-27 **)	275				50	5000 2)									
VAH 17,5-50-50-27 **)	275				60	4750 4)									
VAH 17,5-50-80-27*)**)	275				50	8000 3)									
VAH 17,5-50-80-27*)**)	275				60	7700 5)									

*) with motor-actuated fans
**) checked in accordance with generator current ANSI C37.013
1) adm. tolerance range, no manufacturing tolerance, current value of one specimen, see routine test report
2) max. ambient temperature 38 °C (4900 A at 40°C), terminal bars ≥ 4000 mm2 Cu
3) max. ambient temperature 39 °C (7950 A at 40°C), terminal bars ≥ 8000 mm2 Cu
4) Terminal bars ≥ 4000 mm2 Cu
5) Terminal bars ≥ 8000 mm2 Cu

Selection tables (contd.)

Rated operating sequence				Switching operations without inspection				Operating times with release					Command times with release					
				mechanical		electrical		25 W	160W	160W			25 W	160W	160W			
O - 3 min - CO - 3 min - CO	O - 0.3 s - CO - 3 min - CO	CO - 15 s - CO	O - 0.3 s - CO - 15 s - CO	Drive	Interrupter chamber	with rated (normal) current	with rated short-circuit current	Opening time[1]	Opening time[1]	Closing time[1]	Arc duration	Non-simultaneity (between poles)	OFF	OFF	ON	Charging time for motor drive mechanism	Partitions	Weight
								ms	ms	ms	ms	ms	ms	ms	ms	s		kg
																	■	500
■	■	■	■	10000	10000	10000	30	70 to 110	–	35 to 55	6 to 12	≤ 2	50	–	20	≤ 12	■	500
																	■	500
																	■	200
																	■	200
																	■	380
																	■	500
■				10000	10000	10000	20	70 to 110	–	35 to 55	6 to 12	≤ 2	50	–	20	≤ 12	■	500
																	■	500
																	■	500
																	■	500
																	■	200
																	■	200
																	■	380
																	■	500
■				10000	10000	10000	20	70 to 110	–	35 to 55	6 to 12	≤ 2	50	–	20	≤ 12	■	500
																	■	500
																	■	500
																	■	500
																	■	200
																	■	200
																	■	200
																	■	380
■		■		10000	10000	10000	30	70 to 110	–	35 to 55	6 to 14	≤ 2	50	–	20	≤ 12	■	500
																	■	500
																	■	500
																	■	500
																	■	500

Vacuum circuit-breakers without reclosing facility (Auto-Reclosure) Basic design

This circuit diagram shows the max. possible secondary equipment. Depending on the order volume, components shown may not be included.
with terminal strip
with anti-pumping relay

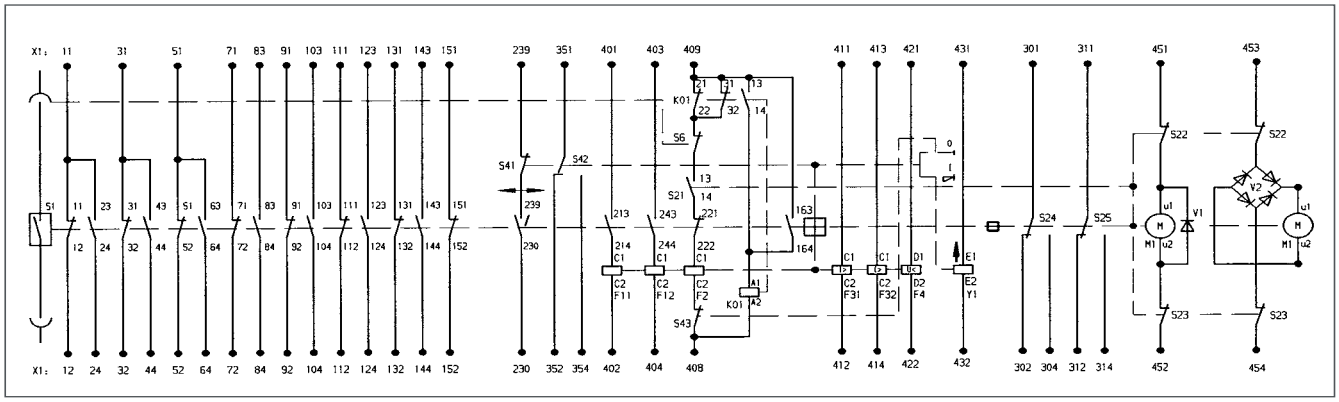

Devices which may be installed in the circuit-breaker depending on order specification

F 11	Shunt opening release (shunt release)
F 2	Shunt closing release (shunt release)
M 1	Motor to charge the energy-storing device
S 1	Auxiliary switch
S 21–S 25	Push switch actuated by energy storing device
S 41	Push switch actuated by the buttons ON / OFF
S 43	Push button actuated by the button OFF
S 6	Push-button actuated by the switchgear truck
V 1	Diode
V 2	Rectifier
X 1	Terminal strip

Charging the energy-storingdevice

As the switch (F 101) is closed, the motor (M) is energized and the energy-storing device is charged. Once charging is finished, the push switches (S 22 and S 23) are actuated by a shaft, and the motor switchedoff.

Switching ON (Closing)

Closing can be effected
- mechanically via the button „ON“
- electrically via the contact element „ON“ (SOE), which excites the shunt closing release (F 2).

As soon as closing operation (ON) is terminated, the motor charges the energy-storing device, as the push switches (S 22 and S 23) are closed with the energy-storing device discharged.

Switching OFF (Opening)

Opening can be effected
- mechanically via the button „OFF“
- electrically via the contact element „OFF“ (SOA), which excites the shunt opening release (F 11).
- electrically via an overcurrent relay (F 321) which excites the shunt opening release (F 11).

Message

In closed state („ON“), the pilot lamp „ON“ (HOE) is lit, in open state („OFF“), the pilot lamp „OFF“ (HOA) is lit. The „malfunction“ signalling relay (KOS) only receives a switching pulse via the passing contact (239/230) from the auxiliary switch of the circuit-breaker (S 1) if tripping is effected by the overcurrent relay (F 321), as in case of manual operation, either the NC contact of the push switch (S 41) of the button„ OFF“ opens, or, in case of electrical operation, the NC contact of the contact element „OFF“ (SOA).
The „malfunction“ signalling relay features a self-holding contact, but can be de-excited via its shut-down element (SOR). The „malfunction“ pilot lamp (HOS) is energized via the „malfunction“ signalling relay.

Vacuum circuit-breakers without reclosing facility (Auto-Reclosure) Basic design

This circuit diagram shows the max. possible secondary equipment. Depending on the order volume, components shown may not be included.
with terminal strip
without anti-pumping relay

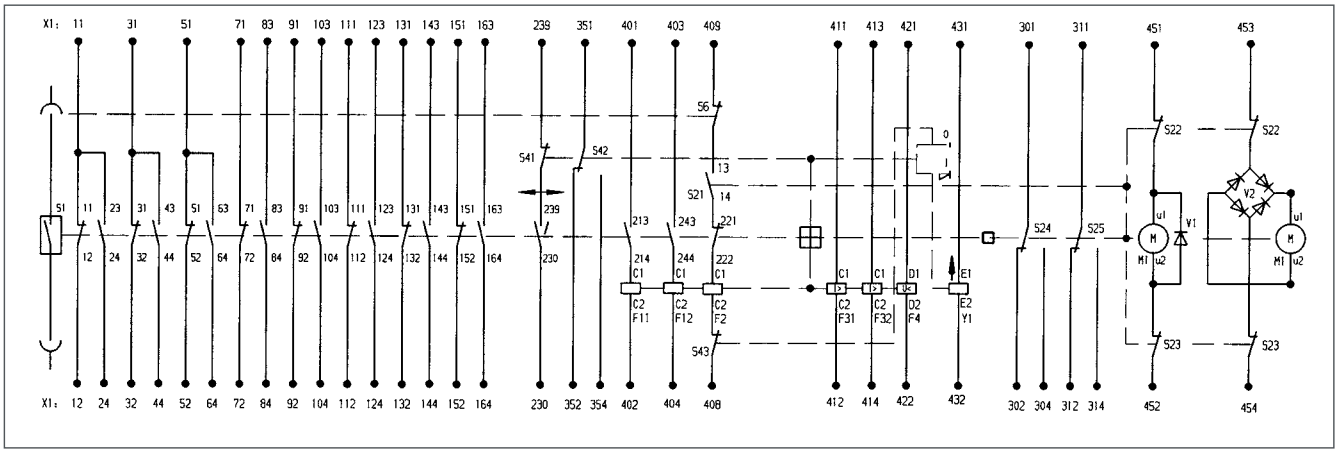

Devices which may be installed in the circuitbreaker depending on order specification

F 11	Shunt opening release (shunt release)
F 2	Shunt closing release (shunt release)
KO1	Anti-pumping relay
M 1	Motor to charge the energy-storing device
S 1	Auxiliary switch
S 21–S 25	Push switch actuated by energy storingdevice
S 41	Push switch actuated by the buttons ON / OFF
S 43	Push button actuated by the button OFF
S 6	Push-button actuated by the switchgear truck
V 1	Diode
V 2	Rectifier
X 1	Terminal strip

The operations „charging the energy-storing device, switching ON, switching OFF and signalling“ are effected as in case of vacuum circuit-breakers without reclosing facility.

Reclosing facility (auto-reclosure)

If a short-circuit occurs, the overcurrent relay (F 321) issues a pulse to the shunt opening release (F 11), after expiry of the preset instantaneous zone, switching the circuit-breaker OFF.
Once the preset dead time has expired, a ON command is issued to the shunt closing release (F 2) via a NO contact of the auto-reclosing relay (F 371).
If the short-circuit is still present, another OFF command is issued by the overcurrent relay, and the circuit- breaker is switched off for good. The auto-reclosing relay does not issue another ON command.

Electric circuit diagrams for circuit-breakers

This circuit diagram shows the max. possible secondary equipment. Depending on the order volume, components shown may not be included.
with connector, 24-pole
with anti-pumping relay

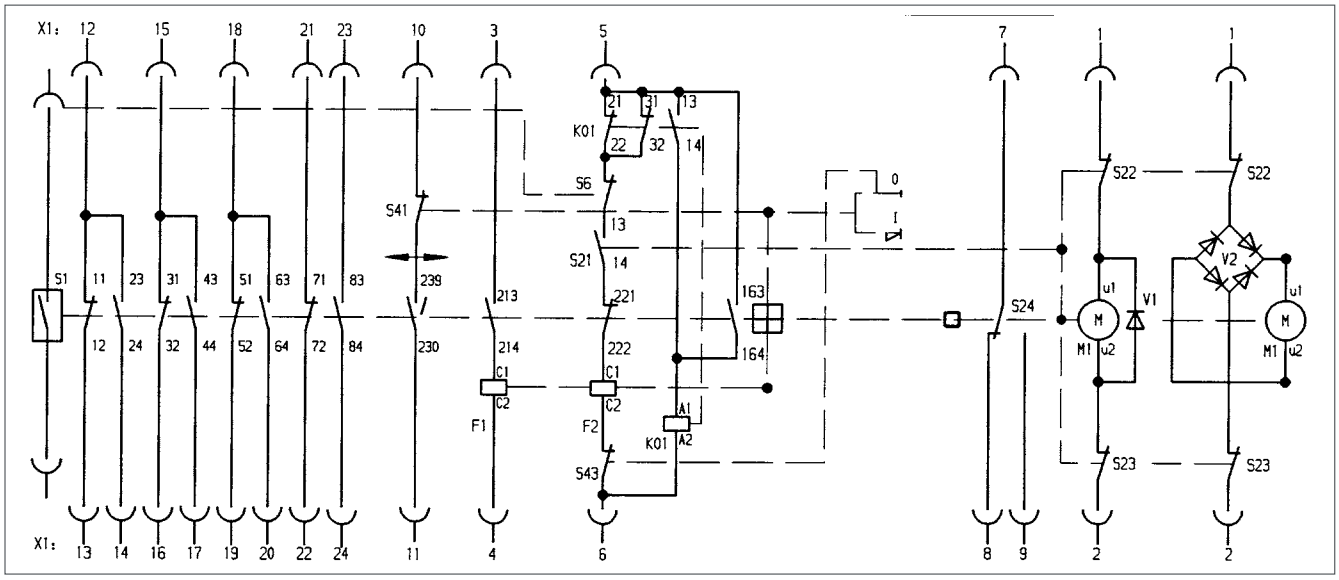

Devices which may be installed in the circuit-breaker depending on order specification

F 11	Shunt opening release (shunt release)
F 2	Shunt closing release (shunt release)
M 1	Motor to charge the energy-storing device
S 1	Auxiliary switch
S 21–S 25	Push switch actuated by energy storing device
S 41	Push switch actuated by the buttons ON / OFF
S 43	Push button actuated by the button OFF
S 6	Push-button actuated by the switchgear truck
V 1	Diode
V 2	Rectifier
X 1	Terminal strip

This circuit diagram shows the max. possible secondary equipment. Depending on the order volume, components shown may not be included.
with connector, 24-pole
without anti-pumping relay

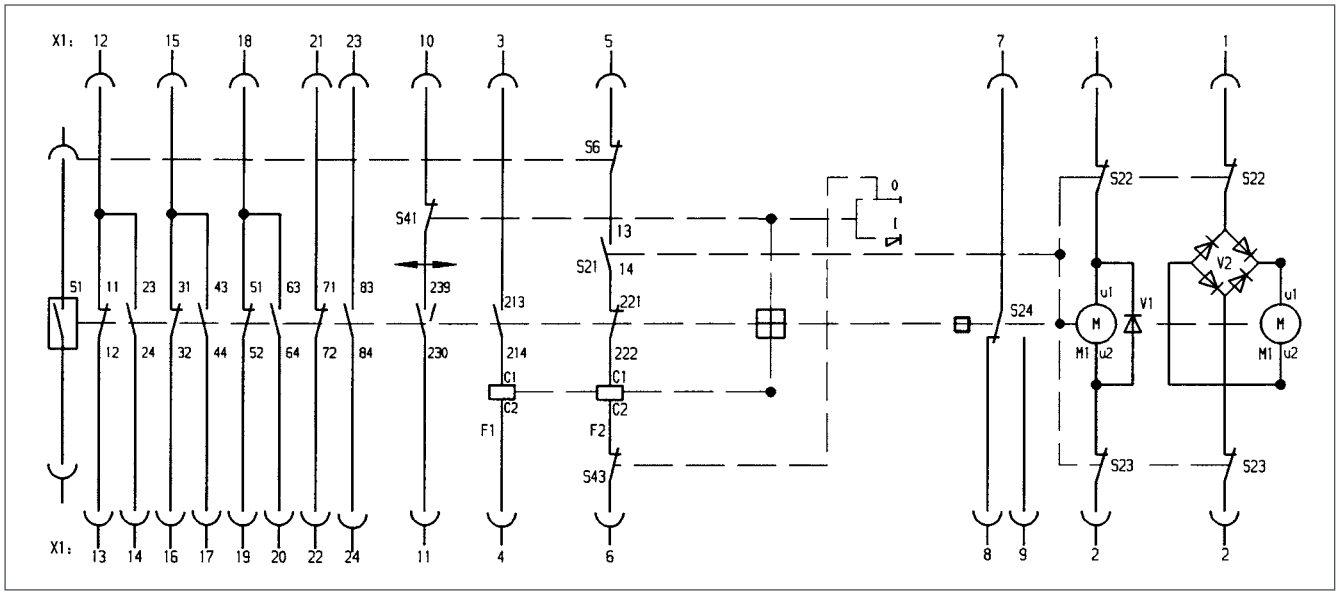

Electric circuit diagrams for circuit-breakers

This circuit diagram shows the max. possible secondary equipment. Depending on the order volume, components shown may not be included.
with connector, 64-pole
with anti-pumping relay

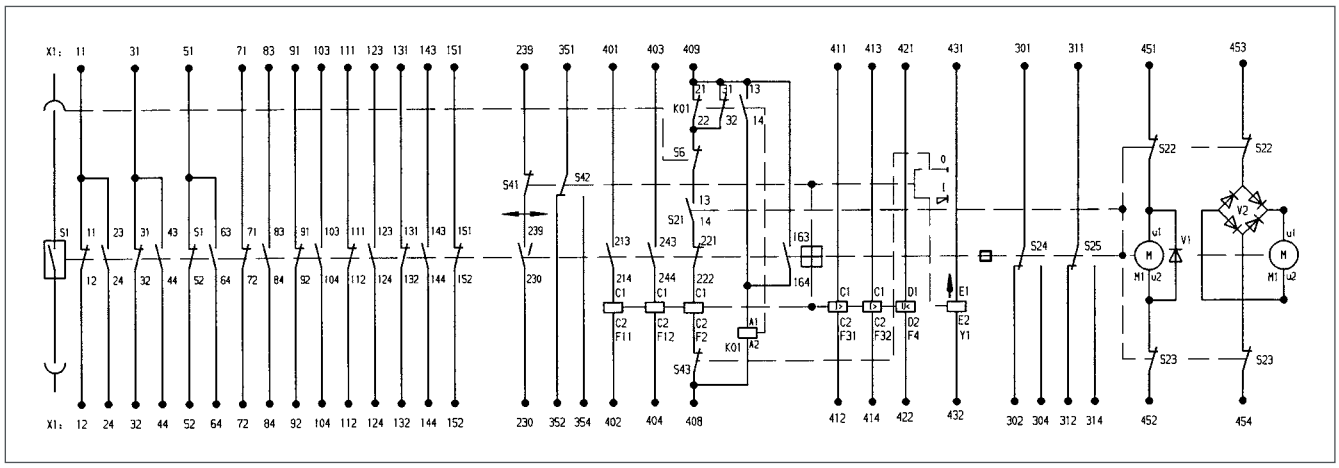

Devices which may be installed in the circuit-breaker depending on order specification

F 11	Shunt opening release (shunt release)
F 2	Shunt closing release (shunt release)
M 1	Motor to charge the energy-storing device
S 1	Auxiliary switch
S 21–S 25	Push switch actuated by energy storing device
S 41	Push switch actuated by the buttons ON / OFF
S 43	Push button actuated by the button OFF
S 6	Push-button actuated by the switchgear truck
V 1	Diode
V 2	Rectifier
X 1	Terminal strip

This circuit diagram shows the max. possible secondary equipment. Depending on the order volume, components shown may not be included.
with connector, 64-pole
without anti-pumping relay

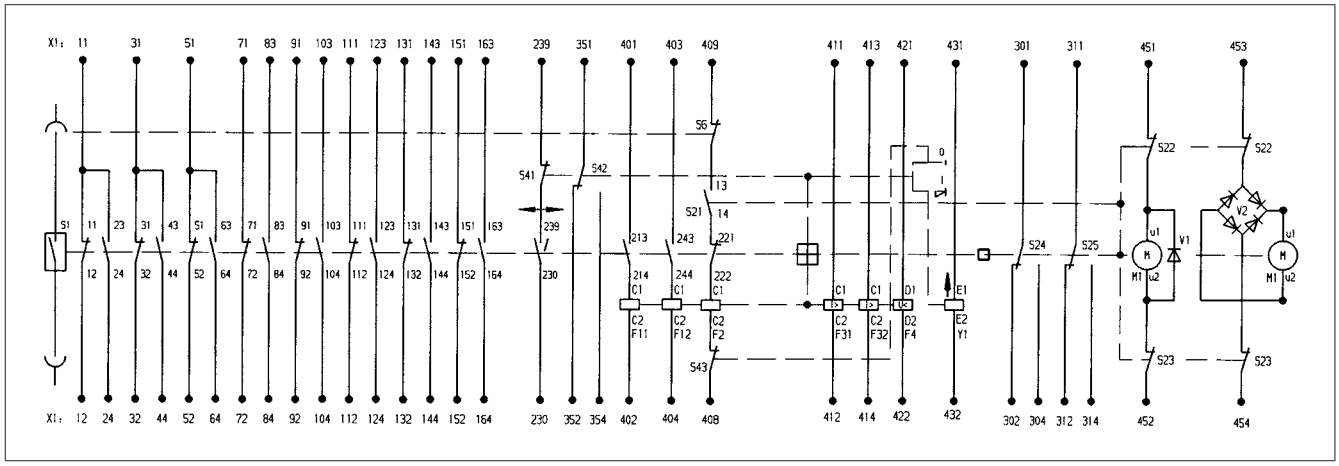

Vacuum circuit-breaker VXA with instantaneous tripping 60 V DC

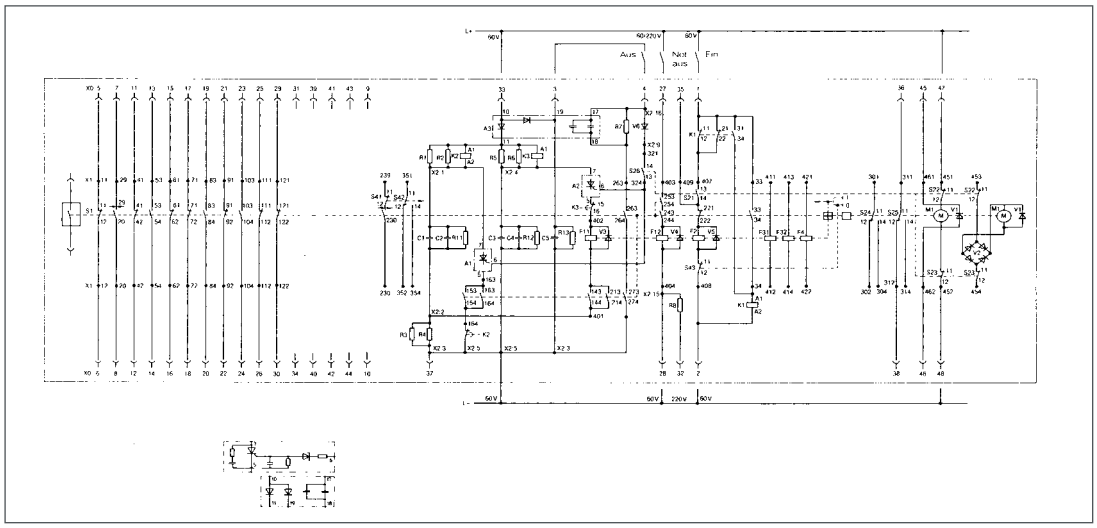

A1	Thyristor module
A 3	Capacitor diode module
C 1, 2,3, 4, 5	Surge discharge capacitor 1000 µF/100 V
F 2	Shunt closing release ON
F 4	Undervoltage release
F 11	Shunt tripping release OFF
F 12	EMERGENCY OFF auxiliary release
F 31, 32	Secondary release
K 2	Timing relay 1.5 sec
M 1	Motor
R 1, 2	Charging resistor 39 Ω
R 3	Charging resistor 68 Ω
R 7	Protection resistor 68 Ω
R 11, 12	Discharge resistor 56 Ω
S 1	Auxiliary switch
S 21–26	Push switch actuated by energy storing device
S 41–43	Push switch, actuated by mechanical ON / OFF switch
V 1, 3, 4, 5, 6	Diode
V 2	Rectifier
X 0	Connector
X 1 T	erminal strip in circuit-breaker

Charging the energy-storingdevice

The motor (M) is energized via L+ and L-, the energy storing device is charged.
Once charging is finished, the push switches (S 22 and S 23) are actuated by a shaft, and the motor switched off.

Switching ON (Closing)

Closing can be effected
- mechanically via the button „ON“
- electrically via the contact element „ON“, which excites the shunt closing release (F 2).

As soon as closing operation (ON) is terminated, the motor charges the energy-storing device, as the push switches (S 22 and S 23) are closed
with the energy-storing device discharged.

Switching OFF (Opening)

Opening can be effected
- mechanically via the button „OFF“
- electrically via the contact element „OFF“, which excitesthe shunt opening release (F 11).
- electrically via the contact element „Emergency OFF“, which excites the shunt opening release (F 12).

Vacuum circuit-breaker VXA with instantaneous tripping 220 V DC

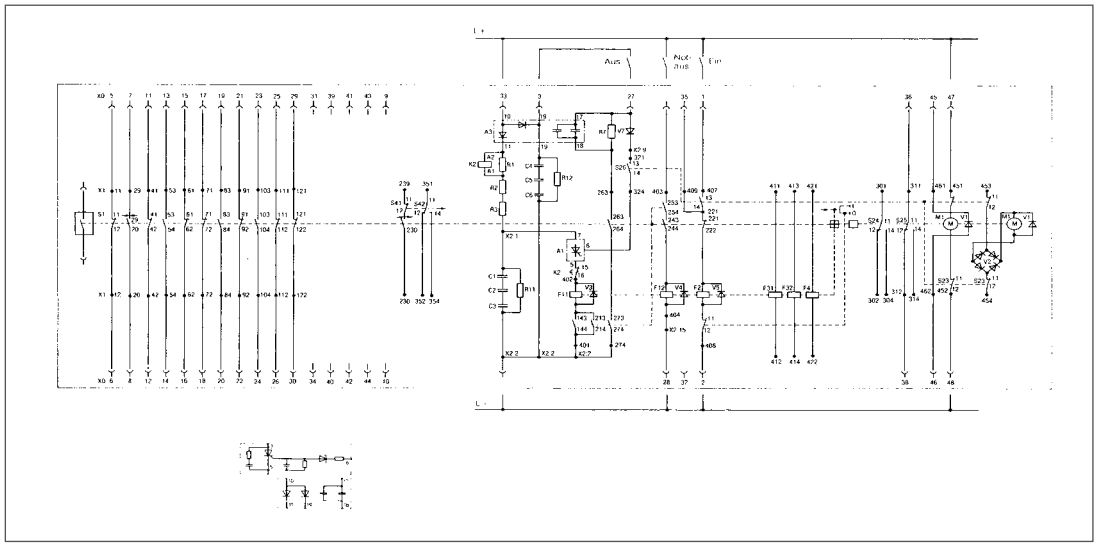

A 1, 2	Thyristor module
A 3	Capacitor diode module
C 1, 2, 3, 4, 5	Surge discharge capacitor 1000 µF/100 V
F 2	Shunt closing release ON
F 4	Undervoltage release
F 11	Shunt tripping release OFF
F 12	EMERGENCY OFF auxiliary release
F 31, 32	Secondary release
K 1	Anti-pumping relay
K 2, 3	Timing relay 1.5 sec
M 1	Motor
R 1, 3, 5, 6	Charging resistor 39 Ω
R 2, 4	Charging resistor 14 Ω
R 7	Protection resistor 14 Ω
R 8	Series resistor 68 Ω
R 11, 12, 13	Discharge resistor 56 Ω
S 1	Auxiliary switch
S 21–26	Push switch actuated by energy storing device
S 41–43	Push switch, actuated by mechanical ON / OFF switch
V 1, 3, 4, 5, 6	Diode
V 2	Rectifier
X 0	Connector
X 1	Terminal strip in circuit-breaker
X 2	Terminal strip on truck

Charging the energy-storingdevice

The motor (M) is energized via L+ and L-, the energy storing device is charged.
Once charging is finished, the push switches (S 22 and S 23) are actuated by a shaft, and the motor switched off.

Switching ON (Closing)

Closing can be effected
- mechanically via the button „ON“
- electrically via the contact element „ON“, which excites the shunt closing release (F 2).

As soon as closing operation (ON) is terminated, the motor charges the energy-storing device, as the push switches (S 22 and S 23) are closed with the energy-storing device discharged.

Switching OFF (Opening)

Opening can be effected
- mechanically via the button „OFF“
- electrically via the contact element „OFF“, which excitesthe shunt opening release (F 11).
- electrically via the contact element „Emergency OFF“, which excites the shunt opening release (F 12).

Vacuum circuit-breaker dimensions

(Dimensions specified on request)

Vacuum circuit-breakers VAA 12 / 17.5 / 24 kV

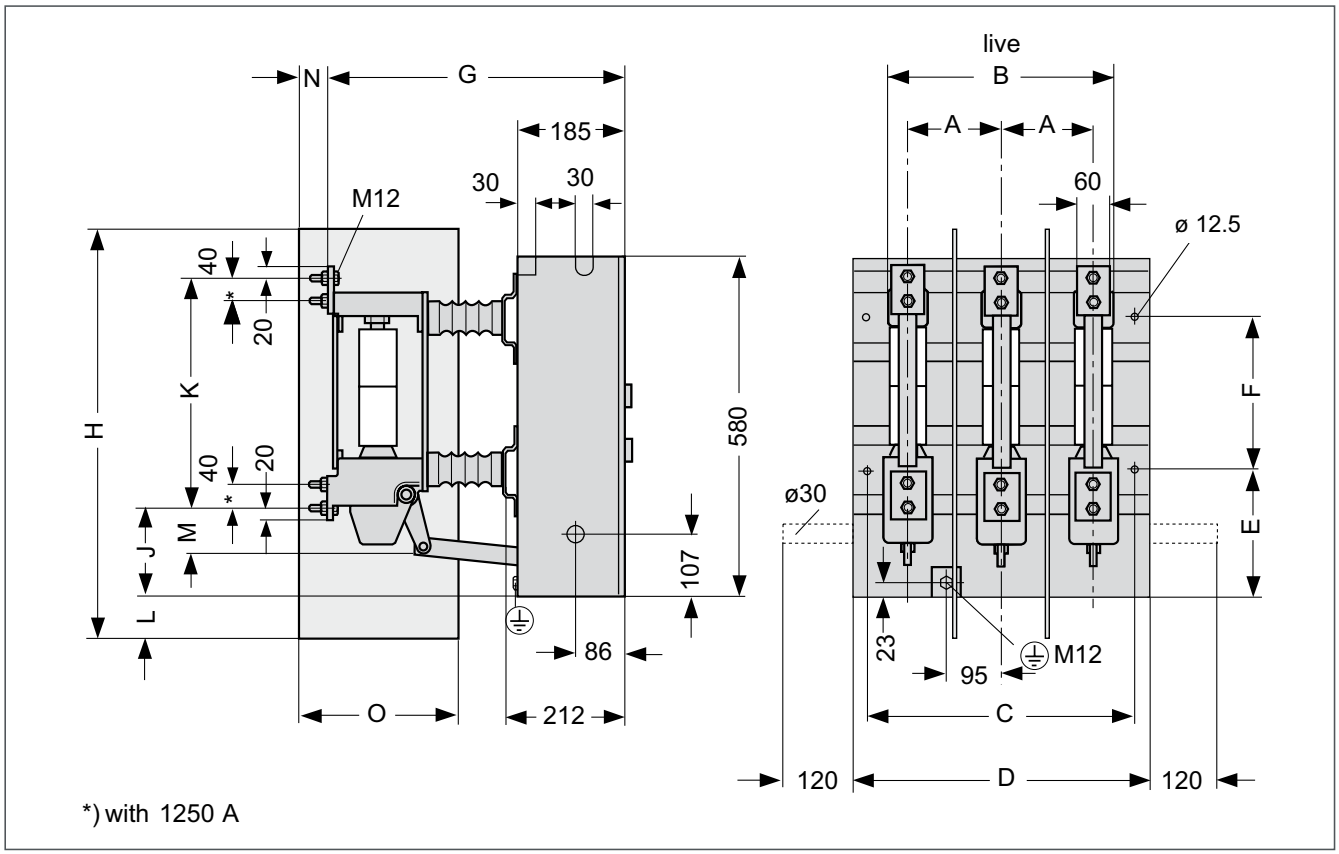

Vacuum circuit-breaker	Rated voltage:	12 kV	17.5 kV	24 kV
	Rated short-time current:	20 kA; 25 kA;	20 kA; 25 kA	16 kA; 25 kA
	Rated (normal) current:	630 A; 1250 A	630 A; 1250 A	630 A; 1250 A

Type/ Rated voltage	Pole center spacing	Installation dimensions									Partitions			
	A	B	C	D	E	F	G	J	K	M	H	L	N	O
VAA 506/12 VAA 5012/12	210	505	560	600	215	260	517	149	394	100	-	-	-	-
VAA 636/12	160	415	460	500	215	260	517	149	394	100	700	72	50	280
VAA 6312/12	210	515	560	600	215	260	517	149	394	100	-	-	-	-
VAA 506/17	275	635	690	730	215	260	562	149	394	100	-	-	-	-
VAA 5012/17	275	635	690	730	215	260	562	149	394	100	-	-	-	-
VAA 636/17	160	415	460	500	215	260	562	149	394	100	700	72	50	280
VAA 6312/17	210	515	560	600	215	260	562	149	394	100	-	-	-	-
	275	645	690	730	215	260	562	149	394	100	-	-	-	-
VAA 406/24 VAA 506/24 VAA 5012/24	210	510	560	600	155	342	597	90	476	100	780	132	60	310
	275	640	690	730	155	342	597	90	476	100	-	-	-	-
VAA 6312/24	210	526	560	600	155	342	597	90	476	100	780	132	60	310
	275	656	690	730	155	342	597	90	476	100	-	-	-	-

Dimensions in mm

Vacuum circuit-breaker dimensions

(Dimensions specified on request) (contd.)

Vacuum circuit-breakers VAA 12 / 17.5 / 24 kV

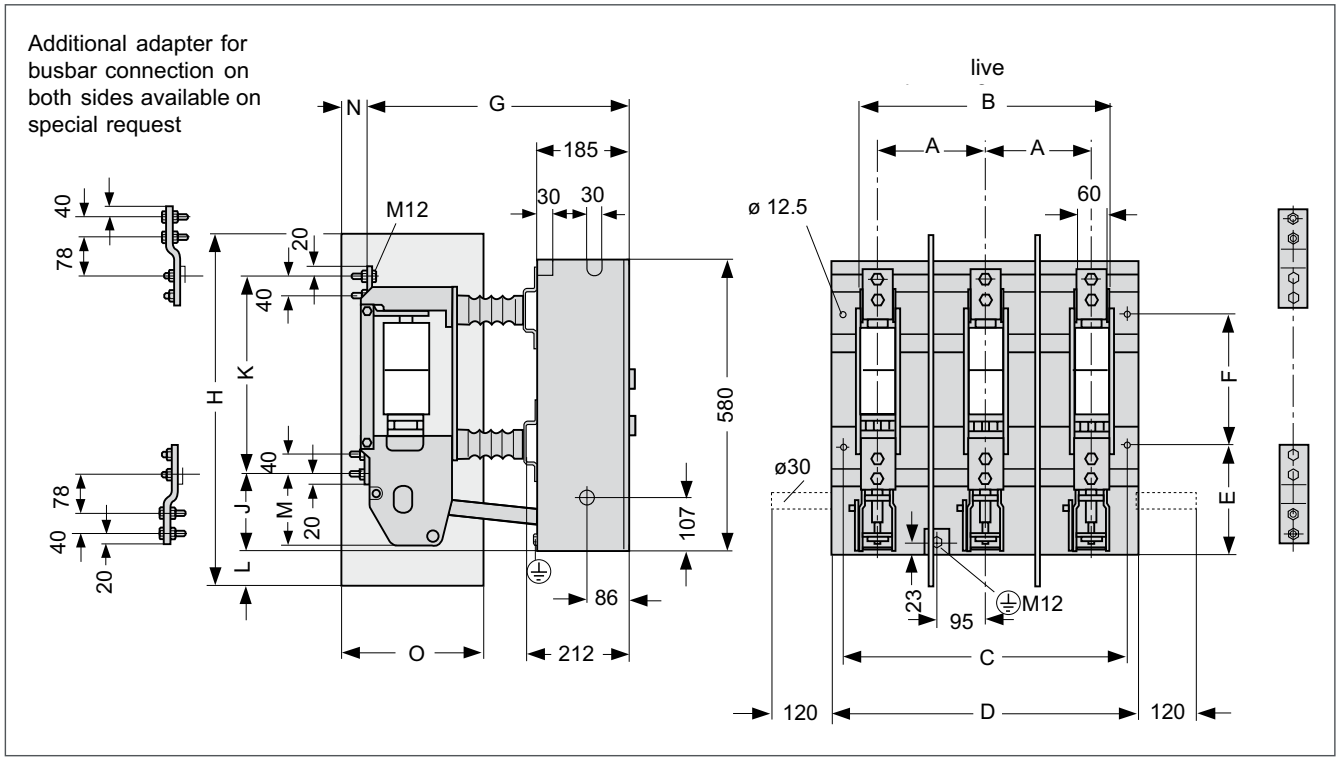

Vacuum circuit-breaker	Rated voltage:	12 kV	17.5 kV
	Rated short-time current:	31.5 kA; 40 kA;	31.5 kA
	Rated (normal) current:	630 A; 1250 A;	1600 A
		1250 A; 1600 A	

Type/ Rated voltage	Pole center spacing	Installation dimensions									Partitions			
	A	B	C	D	E	F	G	J	K	M	H	L	N	O
VA 806/12	160	443	460	500	215	260	517	149	394	142	700	72	50	280
VA 8012/12	160	443	460	500	215	260	517	149	394	142	700	72	50	280
VA 806/12														
VA 8012/12														
VA 8016/12	210	533	560	600	215	260	517	149	394	142	-	-	-	-
VA 8016/12														
VA 10016/12														
VA 8012/17	160	443	460	500	215	260	562	149	394	142	700	72	50	280
	210	533	560	600	215	260	562	149	394	142	-	-	-	-
	275	683	690	730	215	260	562	149	394	142	-	-	-	-
VA 8016/17	210	533	560	600	215	260	517	149	394	142	700	72	50	280

Dimensions in mm

Vacuum circuit-breaker dimensions

(Dimensions specified on request) (contd.)

Vacuum circuit-breakers VA 12 / 17 kV

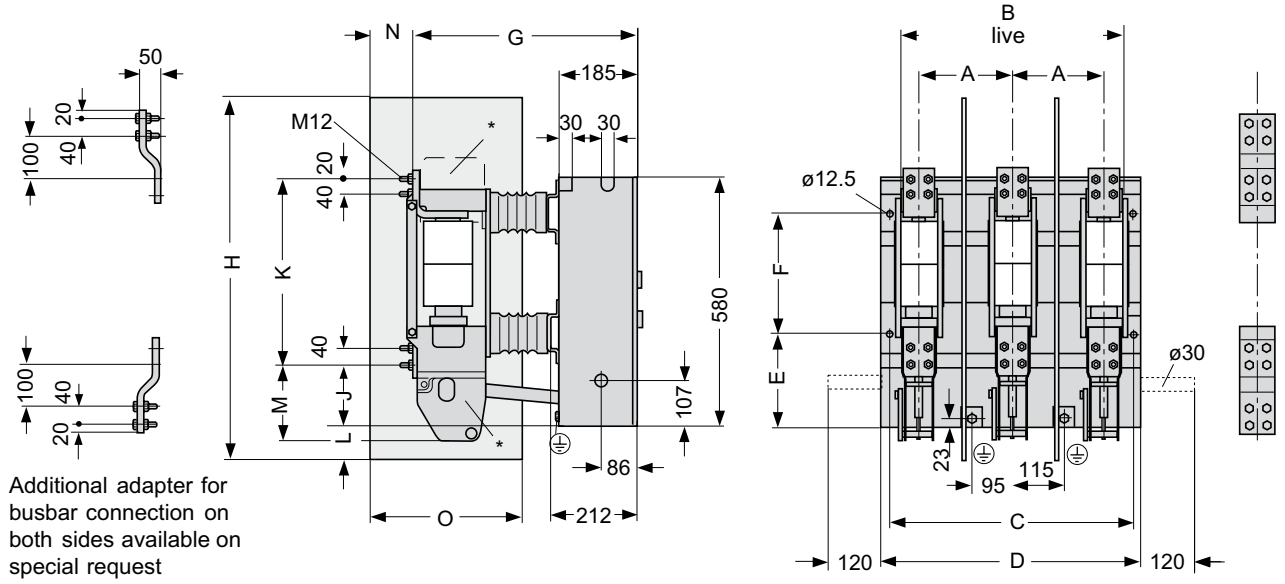

Vacuum circuit-breaker	Rated voltage:	12 kV	17.5 kV
	Rated short-time current:	31.5 kA; 40 kA;	31.5 kA; 50 kA
	Rated (normal) current:	2000 A; 2500 A	2000 A; 2500 A

Type/ Rated voltage	Pole center spacing	Installation dimensions									Partitions			
	A	B	C	D	E	F	G	J	K	M	H	L	N	O
VA 8020/12	210	553	560	600	219	277	520	145	430	169	-	-	-	-
VA 8025/12	210	580	560	600	219	277	520	145	430	169	-	-	-	-
VA 10020/12	210	553	560	600	219	277	520	145	430	169	-	-	-	-
VA 10025/12	210	580	560	600	219	277	520	145	430	169	-	-	-	-
VA 6320/17	210	553	560	600	219	277	565	145	430	169	838	73	100	353
VA 8020/17	210	553	560	600	219	277	565	145	430	169	838	73	100	353
VA 8025/17	210	580	560	600	219	277	565	145	430	169	838	73	100	353
VA 8025/17	275	580	690	730	219	277	565	145	430	169	838	73	100	353
VA 10020/17	210	553	560	600	219	277	565	145	430	169	838	73	100	353
VA 10025/17	275	580	690	730	219	277	565	145	430	169	838	73	100	353

Dimensions in mm

Vacuum circuit-breaker dimensions

(Dimensions specified on request) (contd.)

Vacuum circuit-breakers VA 12 / 17 kV

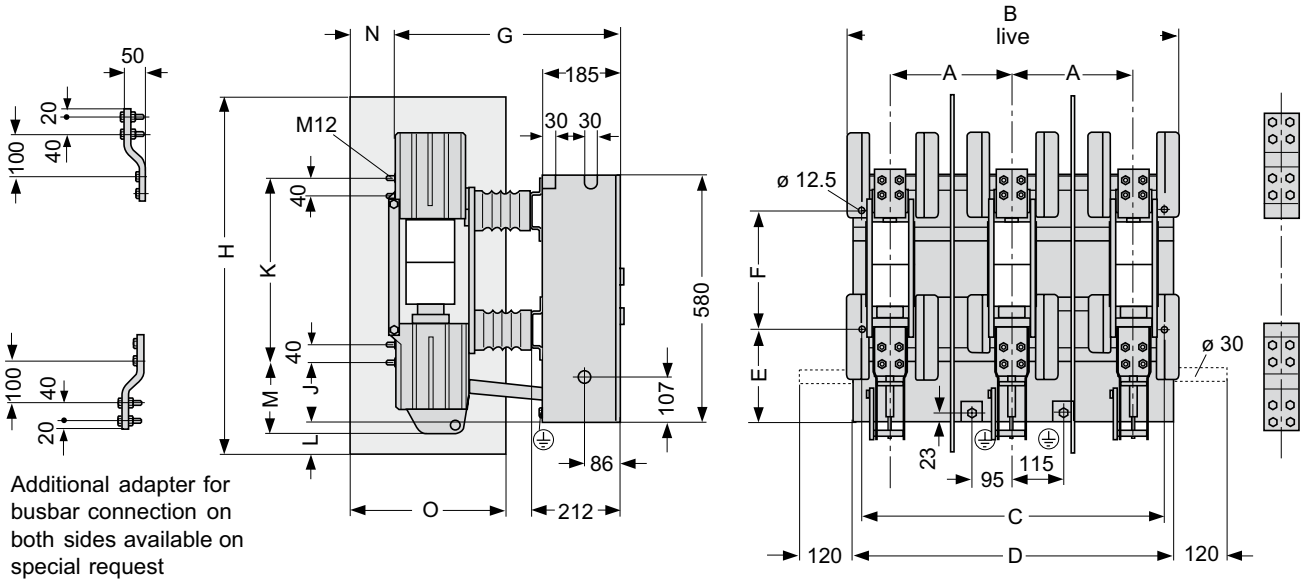

Vacuum circuit-breaker	Rated voltage:	12 kV	17.5 kV
	Rated short-time current:	31.5 kA; 40 kA;	31.5 kA
	Rated (normal) current:	3000 A; 3150 A	3000 A; 3150 A

Type/ Rated voltage	Pole center spacing	Installation dimensions								Partitions			
	A	B	C	D	E	F	G	J	K	M	H	L	N	O
VA 8031/12	210	574	560	600	219	277	520	145	430	169	890	116	61	315
VA 10031/12	210	574	560	600	219	277	520	145	430	169	890	116	61	315
VA 8031/12	275	740	690	730	219	277	520	145	430	169	874	91	56	290
VA 10031/12	275	740	690	730	219	277	520	145	430	169	874	91	56	290
VA 8031/17	210	553	560	600	219	277	565	145	430	169	960	124	210	555
VA 8031/17	275	740	690	730	219	277	565	145	430	169	874	91	56	290

Dimensions in mm

Vacuum circuit-breaker dimensions

(Dimensions specified on request) (contd.)

Vacuum circuit-breakers VA 12 kV

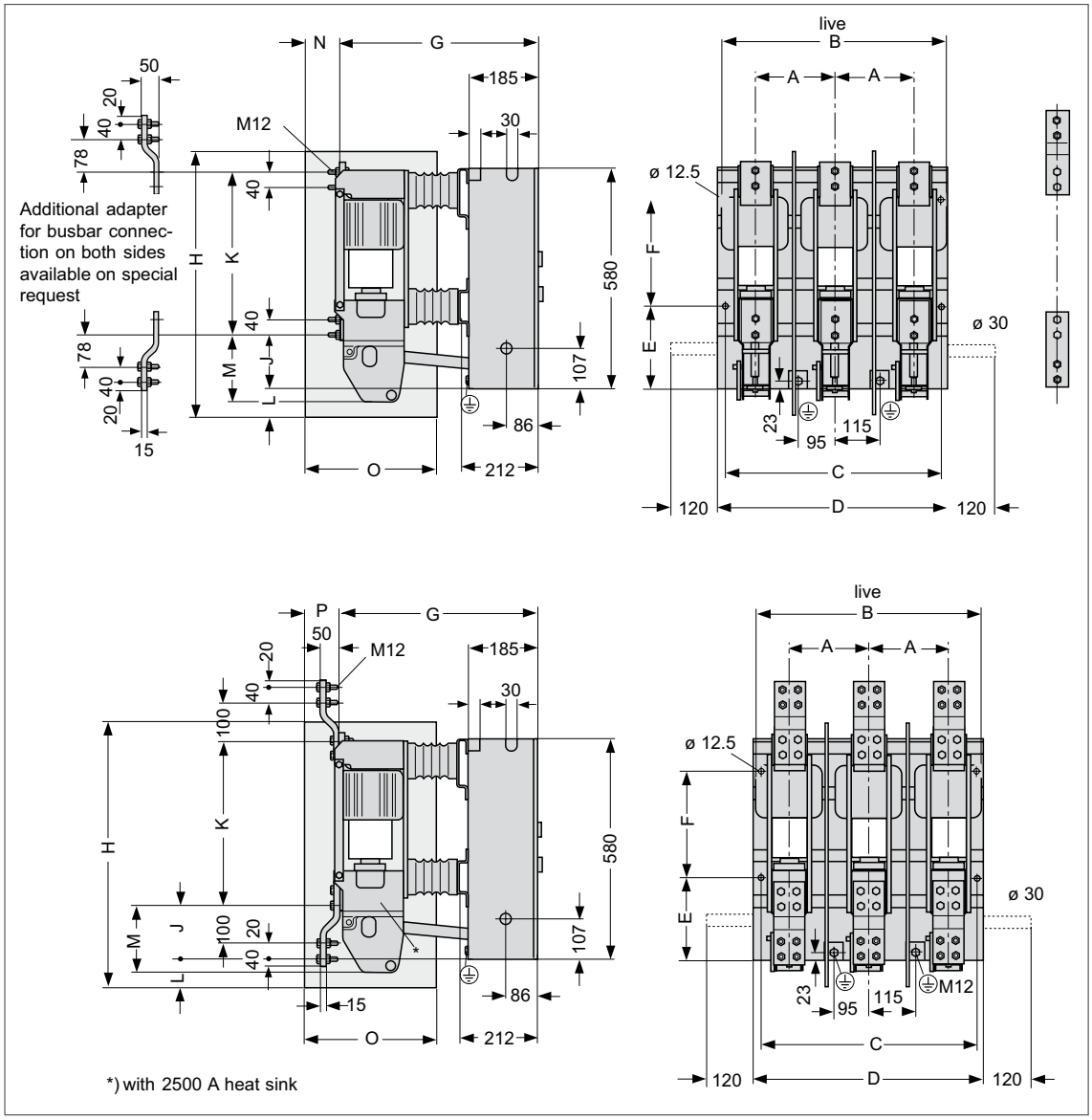

Vacuum circuit-breaker	Rated voltage:	12 kV;
	Rated short-time current:	50 kA;
	Rated (normal) current:	1250 A; 1600 A; 2000 A; 2500 A

Type/ Rated voltage	Pole center spacing	Installation dimensions									Partitions			
	A	B	C	D	E	F	G	J	K	M	H	L	N	O
VA 12512/12	210	590	560	600	219	277	520	145	430	169	700	56	27	280
VA 12516/12	210	590	560	600	219	277	520	145	430	169	700	56	27	280
VA 12520/12	210	590	560	600	219	277	520	145	430	169	700	56	27	280
VA 12525/12	210	590	560	600	219	277	520	145	430	169	700	56	27	280

Dimensions in mm

Vacuum circuit-breaker dimensions

(Dimensions specified on request) (contd.)

Vacuum circuit-breakers VA 12 kV

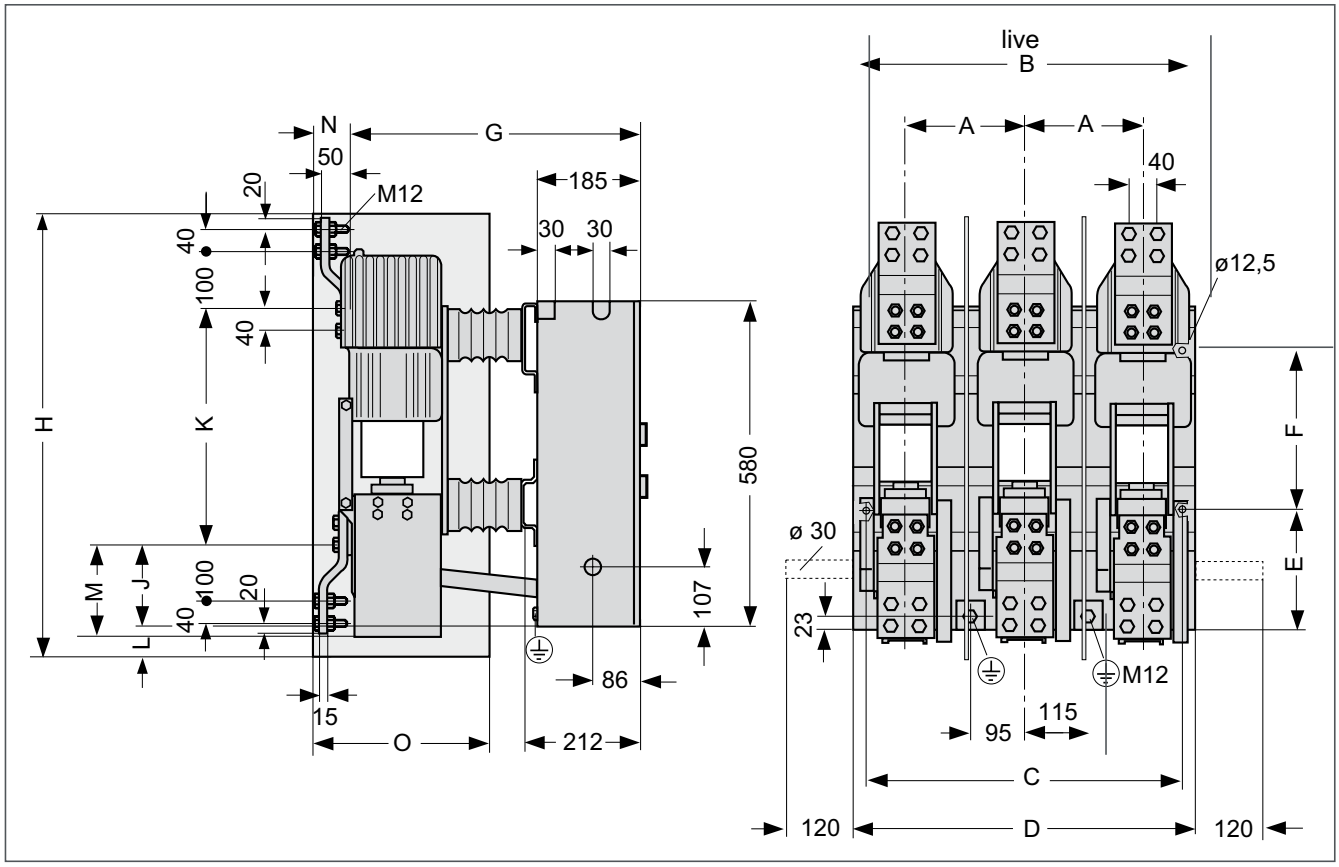

Vacuum circuit-breaker	Rated voltage:	12 kV
	Rated short-time current:	50 kA
	Rated (normal) current:	3150 A

Type/ Rated voltage	Pole center spacing	Installation dimensions									Partitions			
	A	B	C	D	E	F	G	J	K	M	H	L	N	O
VA 12531/12	210	590	560	600	219	277	520	145	430	169	800	55	62	315
	275	720	690	730	219	277	520	145	430	169	700	55	27	280

Dimensions in mm

Vacuum circuit-breaker dimensions

(Dimensions specified on request) (contd.)

Vacuum circuit-breakers VA, VXC 24 kV

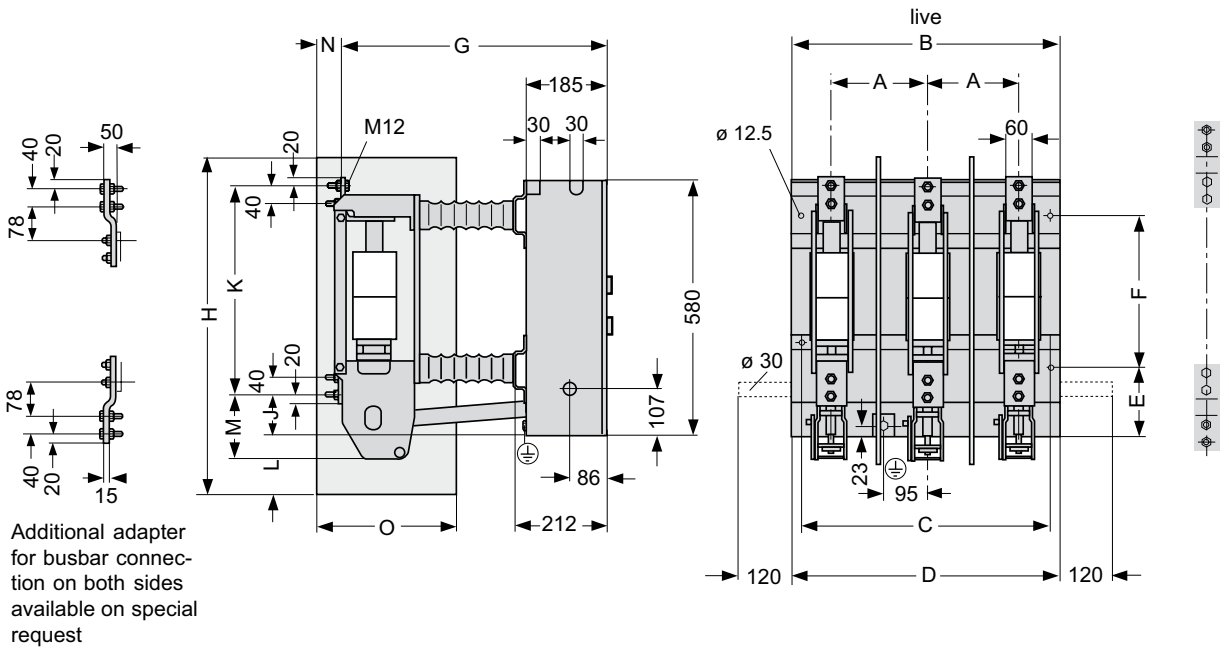

Vacuum circuit-breaker	Rated voltage:	VA 24 kV	VXC 24 kV
	Rated short-time current:	25 kA	25 kA
	Rated (normal) current:	1250 A; 1600 A	1250 A

Type/ Rated voltage	Pole center spacing	Installation dimensions									Partitions			
	A	B	C	D	E	F	G	J	K	M	H	L	N	O
VA 6316/24	210	533	560	600	155	342	597	90	476	142	780	132	60	310
	275	663	690	730	155	342	597	90	476	142	-	-	-	-
VXC 6312/24	210	533	560	600	155	342	597	90	476	142	780	132	60	310
	275	663	690	730	155	342	597	90	476	142	-	-	-	-

Dimensions in mm

Vacuum circuit-breaker dimensions

(Dimensions specified on request) (contd.)

Vacuum circuit-breakers VA, VXC 24 kV

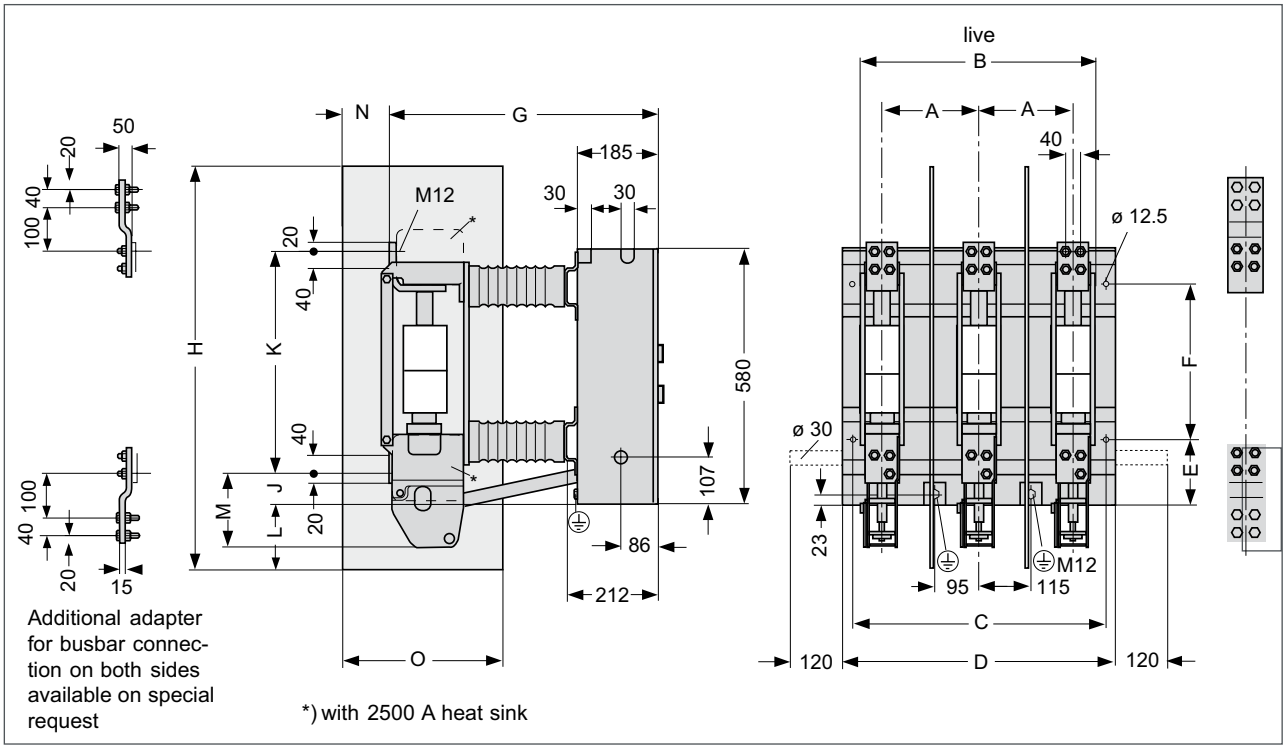

Vacuum circuit-breaker	Rated voltage:	VA 24 kV	VXC 24 kV
	Rated short-time current:	25 kA; 31.5 kA; 50 kA	25 kA
	Rated (normal) current:	2000 A; 2500 A	2500 A

Type/ Rated voltage	Pole center spacing	Installation dimensions									Partitions			
	A	B	C	D	E	F	G	J	K	M	H	L	N	O
VA 6320/24	210	533	560	600	149	347	600	75	500	169	995	173	107	360
	275	683	690	730	149	347	600	75	500	169	-	-	-	-
VA 8020/24	210	533	560	600	149	347	600	75	500	169	995	173	107	360
	275	683	690	730	149	347	600	75	500	169	-	-	-	-
VA 10020/24	210	533	560	600	149	347	600	75	500	169	995	173	107	360
	275	693	690	730	149	347	600	75	500	169	-	-	-	-
VXC 6325/24	210	580	560	600	149	347	600	75	500	169	980	110	110	390
	275	710	690	730	149	347	600	75	500	169	-	-	-	-
VA 8025/24	210	580	560	600	149	347	600	75	500	169	995	110	110	360
	275	710	690	730	149	347	600	75	500	169	-	-	-	-
VA 10025/24	210	580	560	600	149	347	600	75	500	169	995	110	110	360
	275	710	690	730	149	347	600	75	500	169	-	-	-	-

Dimensions in mm

Vacuum circuit-breaker dimensions

(Dimensions specified on request) (contd.)

Vacuum circuit-breakers VA, VXC 36 kV

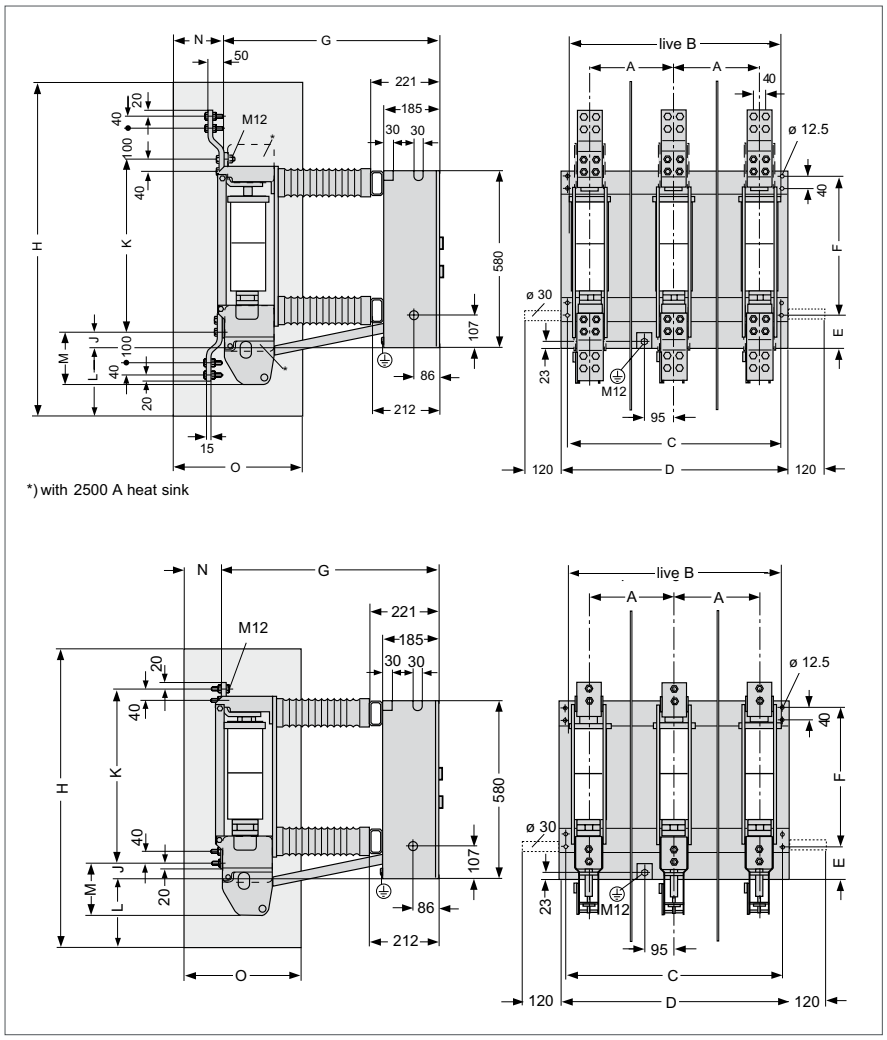

Vacuum circuit-breaker	Rated voltage:	VA 36 kV	VXC 36 kV
	Rated short-time current:	31.5 kA; 40 kA	25 kA; 31.5 kA
	Rated (normal) current:	2000 A; 2500 A	1250 A; 2500 A

Type/ Rated voltage	Pole center spacing	Installation dimensions								Partitions			
	A	B	C	D	E	F	G	J	K	M	H	L	N	O
VA 8020/36	275	686	690	730	82	476	703	30	587	169	1100	213	160	420
	400	936	940	980	82	476	703	30	587	169	-	-	-	-
VA 10020/36	275	686	690	730	82	476	703	30	587	169	1100	213	160	420
	400	936	940	980	82	476	703	30	587	169	-	-	-	-
VA 8025/36	400	936	940	980	82	476	703	30	587	169	1100	213	160	420
VA 10025/36	400	936	940	980	82	476	703	30	587	169	1100	213	160	420
VXC 6325/36	400	936	940	980	82	476	703	30	587	169	1100	213	160	420
VXC 8025/36	400	936	940	980	82	476	703	30	587	169	1100	213	160	420
VXC 8012/36	275	686	690	730	82	476	703	30	587	169	980	213	110	390
	400	936	940	980	82	476	703	30	587	169	1100	213	160	420
VXC 6312/36	275	686	690	730	82	476	703	30	587	169	980	213	110	390
	400	936	940	980	82	476	703	30	587	169	1100	213	160	420

Dimensions in mm

Vacuum circuit-breaker dimensions

(Dimensions specified on request) (contd.)

Vacuum circuit-breakers VXC 38 kV

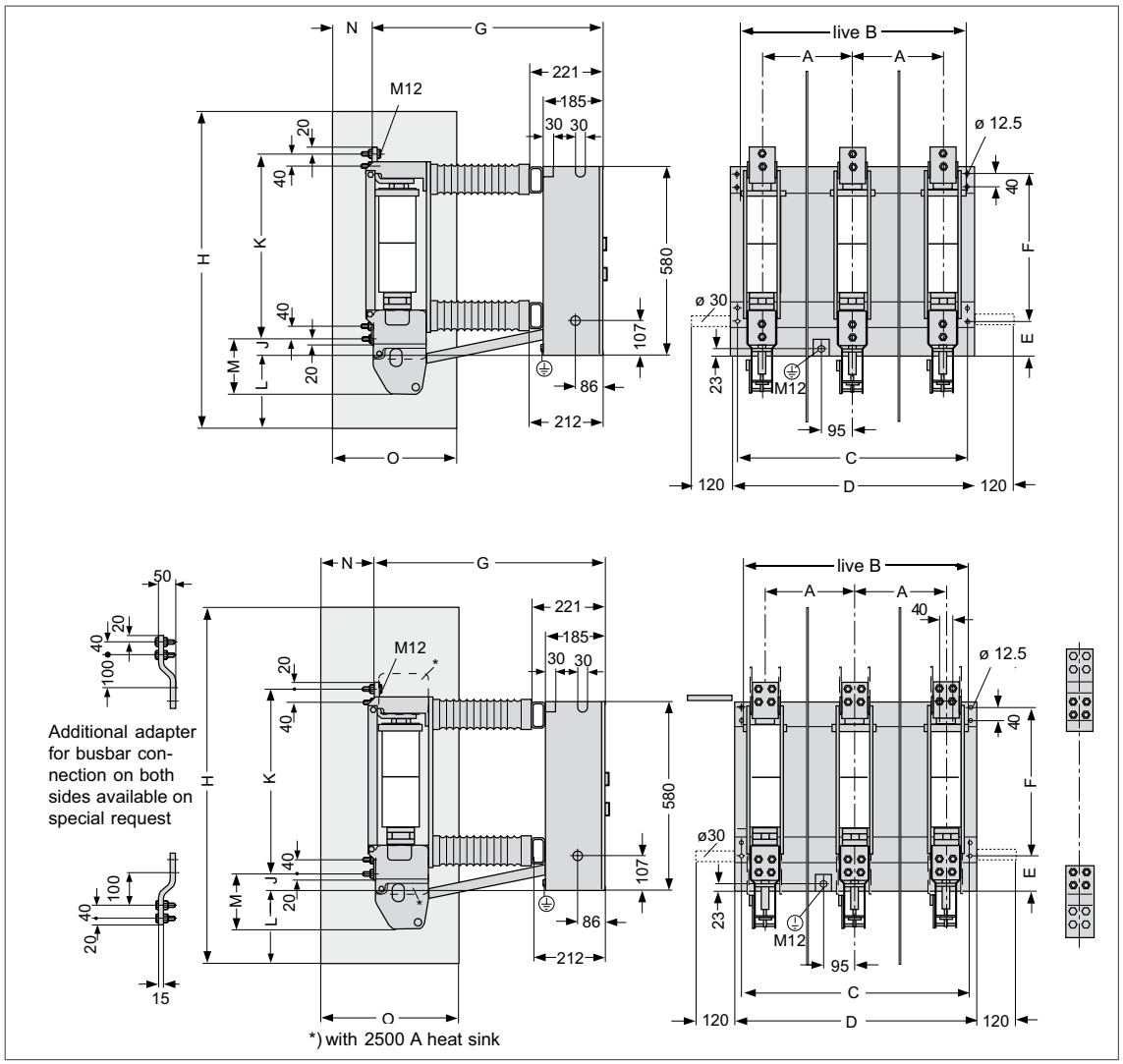

Vacuum circuit-breaker	Rated voltage:	38 kV
	Rated short-time current:	25 kA; 31.5 kA
	Rated (normal) current:	1250 A; 2500 A

Type/Rated voltage	Pole center spacing	Installation dimensions									Partitions			
	A	B	C	D	E	F	G	J	K	M	H	L	N	O
VXC 6312/38	400	936	940	980	82	501	903	30	587	169	980	213	110	390
VXC 8012/38	400	936	940	980	82	501	903	30	587	169	980	213	110	390
VXC 10012/38	400	936	940	980	82	501	903	30	587	169	980	213	110	390
VXC 6325/38	400	936	940	980	82	501	903	30	587	169	1100	213	160	420
VXC 8025/38	400	936	940	980	82	501	903	30	587	169	1100	213	160	420
VXC 10025/38	400	936	940	980	82	501	903	30	587	169	1100	213	160	420

Dimensions in mm

Vacuum circuit-breaker dimensions

(Dimensions specified on request) (contd.)

Vacuum circuit-breakers VAH 12 kV

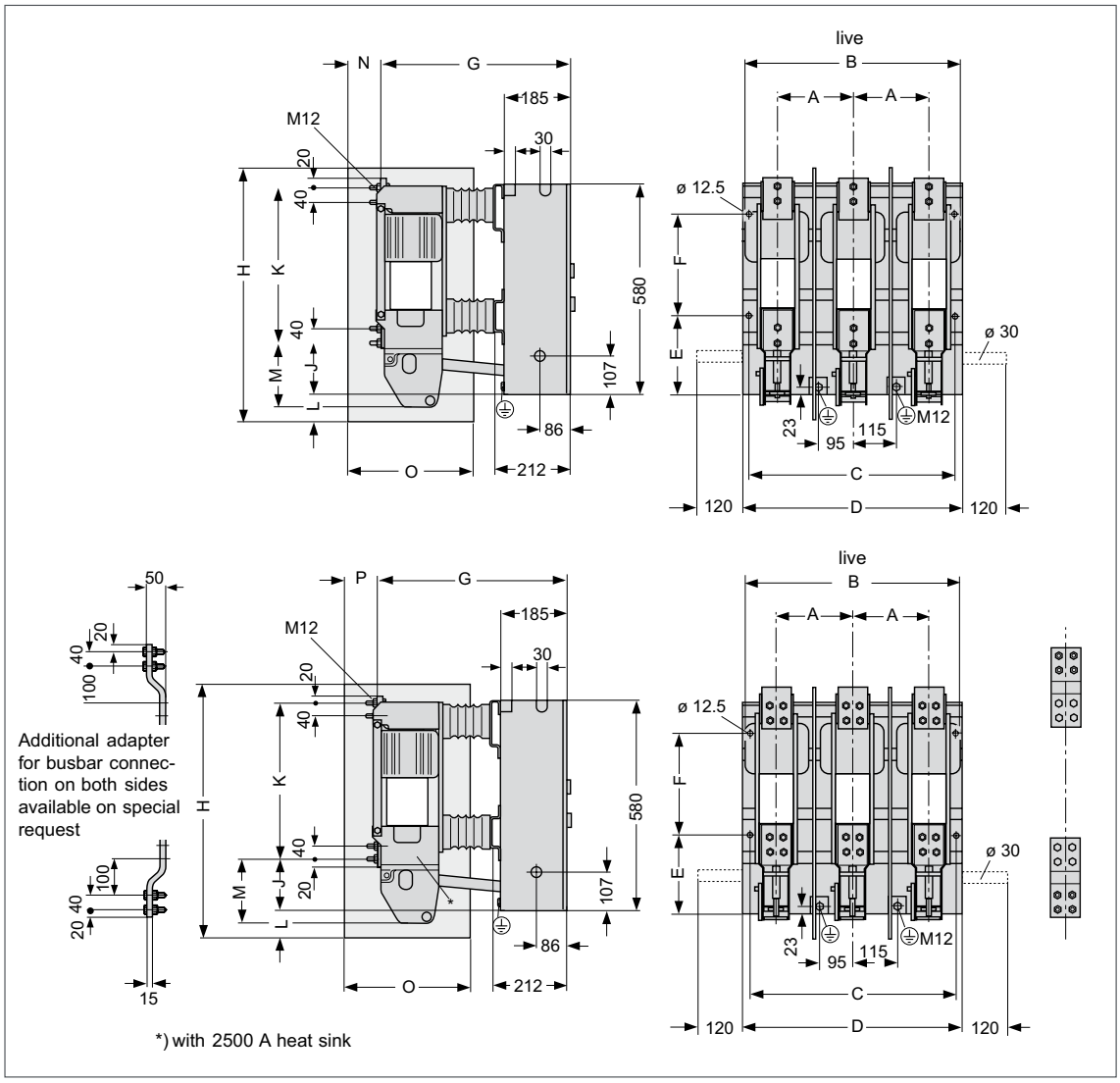

Vacuum circuit-breaker	Rated voltage:	12 kV
	Rated short-time current:	63 kA
	Rated (normal) current:	1250 A; 2500 A

Type/ Rated voltage	Pole center spacing	Installation dimensions									Partitions			
	A	B	C	D	E	F	G	J	K	M	H	L	N	O
VAH 12-63-12-27	275	720	795	835	180	338	565	127	450	169	745	50	50	372
VAH 12-63-25-27	275	720	795	835	180	338	565	127	450	169	745	50	50	372
VAH 13.8-63-12-27	275	720	795	835	180	338	565	127	450	169	745	50	50	372
VAH 13.8-63-12-27	275	720	795	835	180	338	565	127	450	169	745	50	50	372
VAH 17.5-50-12-27	275	720	795	835	180	338	565	127	450	169	745	50	50	372
VAH 17.5-50-25-27	275	720	795	835	180	338	565	127	450	169	745	50	50	372

Dimensions in mm

Vacuum circuit-breaker dimensions

(Dimensions specified on request) (contd.)

Vacuum circuit-breakers VAH 12 / 13.8 / 17.5 kV

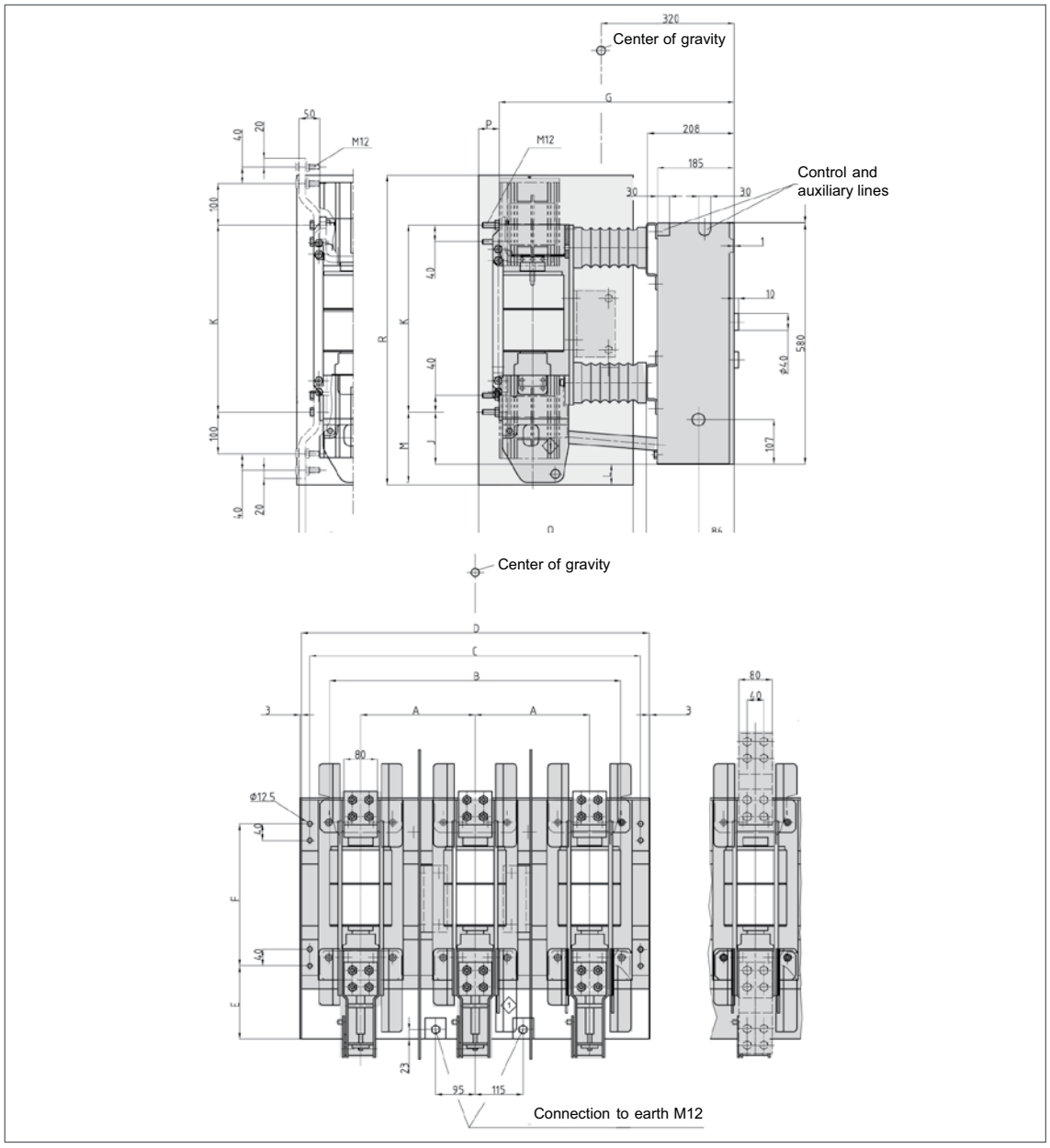

Vacuum circuit-breaker	Rated voltage:	12 kV	13.8 kV	17.5 kV
	Rated short-time current:	63 kA	63 kA	63 kA
	Rated (normal) current:	3150 A	3150 A	3150 A

Type/ Rated voltage	Pole center spacing	Installation dimensions									Partitions			
	A	B	C	D	E	F	G	J	K	M	H	L	N	O
VAH 12-63-31-27	275	700	795	835	180	338	565	127	450	169	-	50	-	372
VAH 13.8-63-31-27	275	700	795	835	180	338	565	127	450	169	-	50	-	372
VAH 17.5-50-31-27	275	700	795	835	180	338	565	127	450	169	-	50	-	372

Dimensions in mm

Vacuum circuit-breaker dimensions

(Dimensions specified on request) (contd.)

Vacuum circuit-breakers VAH 12 / 15.8 / 17.5 kV

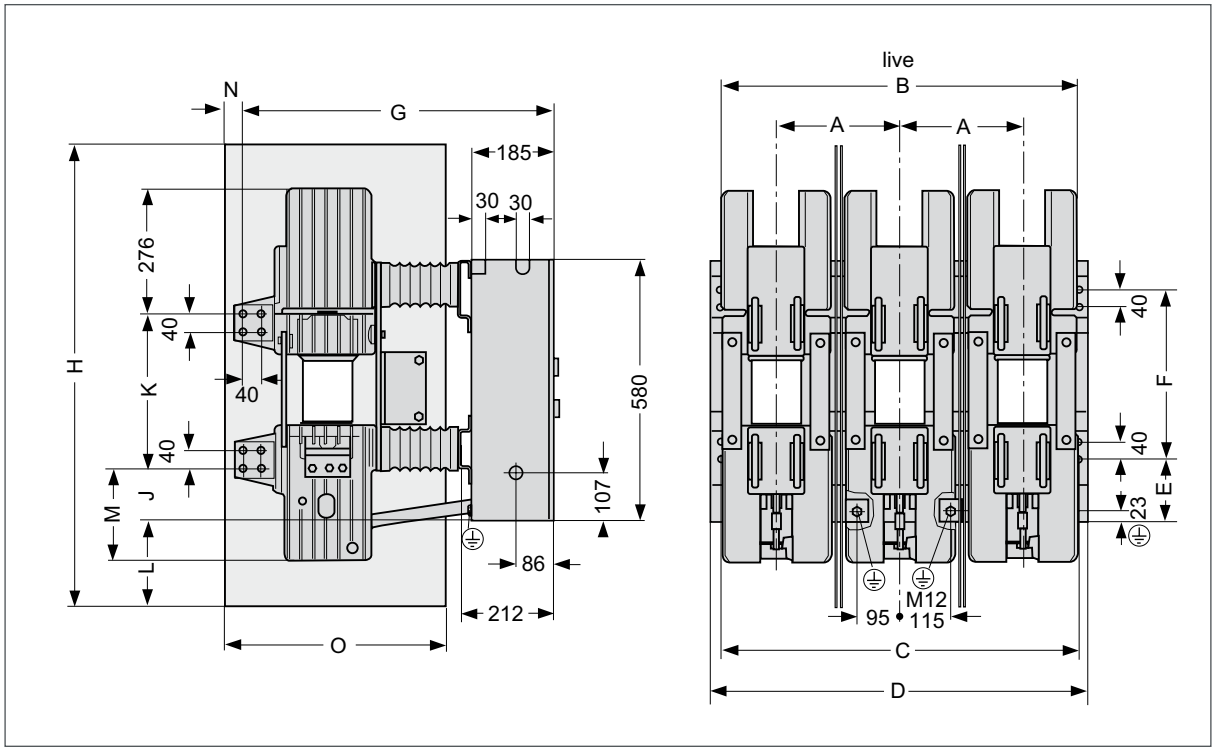

Vacuum circuit-breaker	Rated voltage:	12 kV	13.8 (15.8) kV	17.5 kV
	Rated short-time current:	50/63 kA	63 kA	40/50 kA
	Rated (normal) current:	4000/5000/8000 A	4000/5000/8000 A	4000/5000/8000 A

Type/ Rated voltage	Pole center spacing	Installation dimensions									Partitions			
	A	B	C	D	E	F	G	J	K	M	H	L	N	O
VAH 12-50-40-27	275	790	795	835	140	378	693	115	344	205	1025	190	40	490
VAH 12-63-40-27	275	790	795	835	140	378	693	115	344	205	1025	190	40	490
VAH 12-50-50-27	275	790	795	835	140	378	693	115	344	205	1025	190	40	490
VAH 12-63-50-27	275	790	795	835	140	378	693	115	344	205	1025	190	40	490
VAH 12-63-80-27	275	790	795	835	140	378	693	115	344	205	1025	190	40	490
VAH 13.8-63-40-27	275	790	795	835	140	378	693	115	344	205	1025	190	40	490
VAH 13.8-63-50-27	275	790	795	835	140	378	693	115	344	205	1025	190	40	490
VAH 13.8-63-80-27	275	790	795	835	140	378	693	115	344	205	1025	190	40	490
VAH 17.5-50-40-27	275	790	795	835	140	378	693	115	344	205	1025	190	40	490
VAH 17.5-50-50-27	275	790	795	835	140	378	693	115	344	205	1025	190	40	490
VAH 17.5-50-80-27	275	790	795	835	140	378	693	115	344	205	1025	190	40	490

Dimensions in mm

Vacuum circuit-breaker dimensions

(Dimensions specified on request) (contd.)

Vacuum circuit-breakers VXA 27 kV - for railway applications

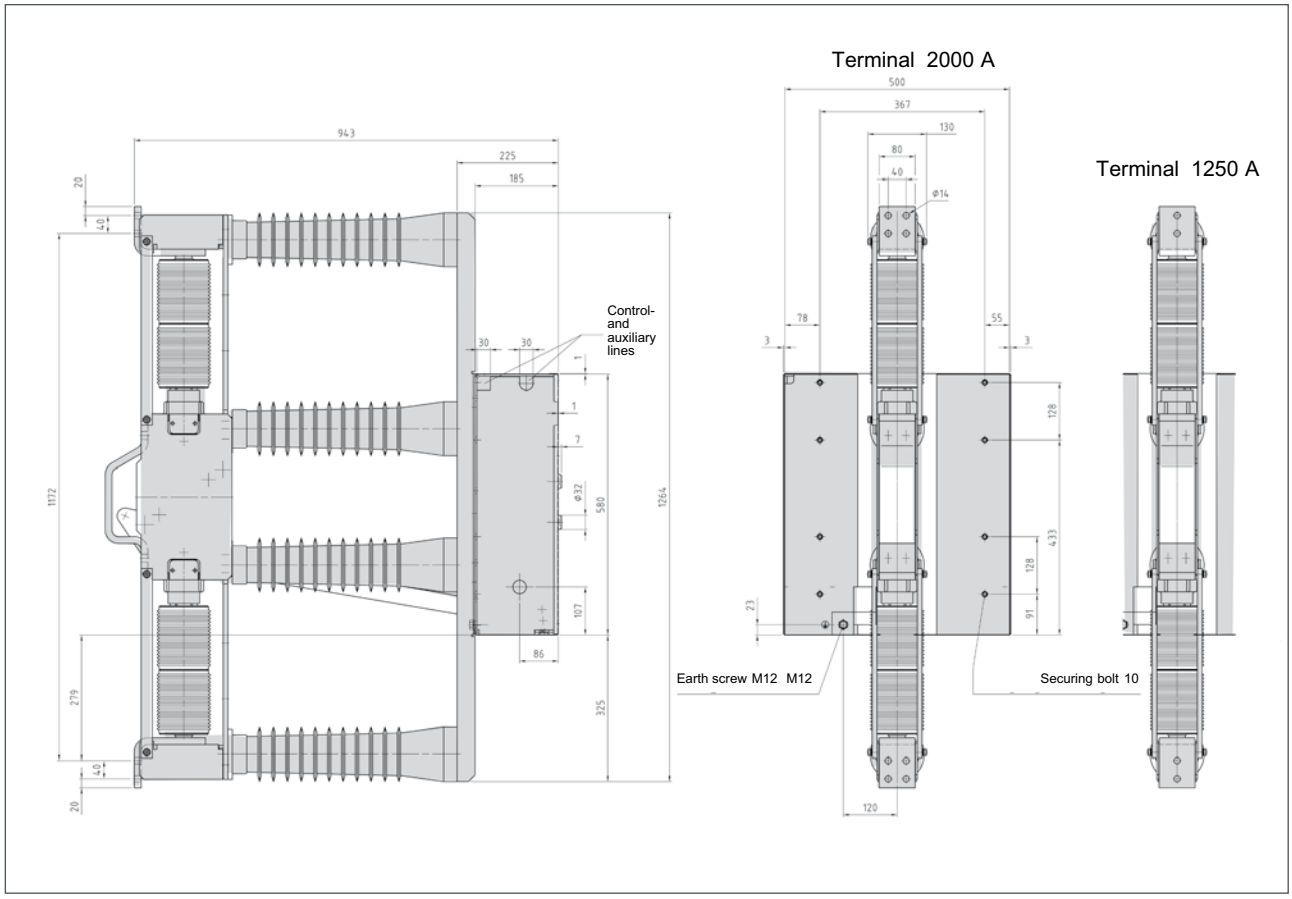

		VXA 6312/27-250	VXA 8012/27-250	VXA 8020/27-250
Vacuum circuit-breaker	Rated voltage:	27 kV	27 kV	27 kV
	Rated short-time current:	25 kA	31.5 kA	31.5 kA
	Rated (normal) current:	1250 A	1250 A	2000 A

Vacuum circuit-breaker dimensions

(Dimensions specified on request) (contd.)

Vacuum circuit-breakers VXB 27 kV - for railway applications

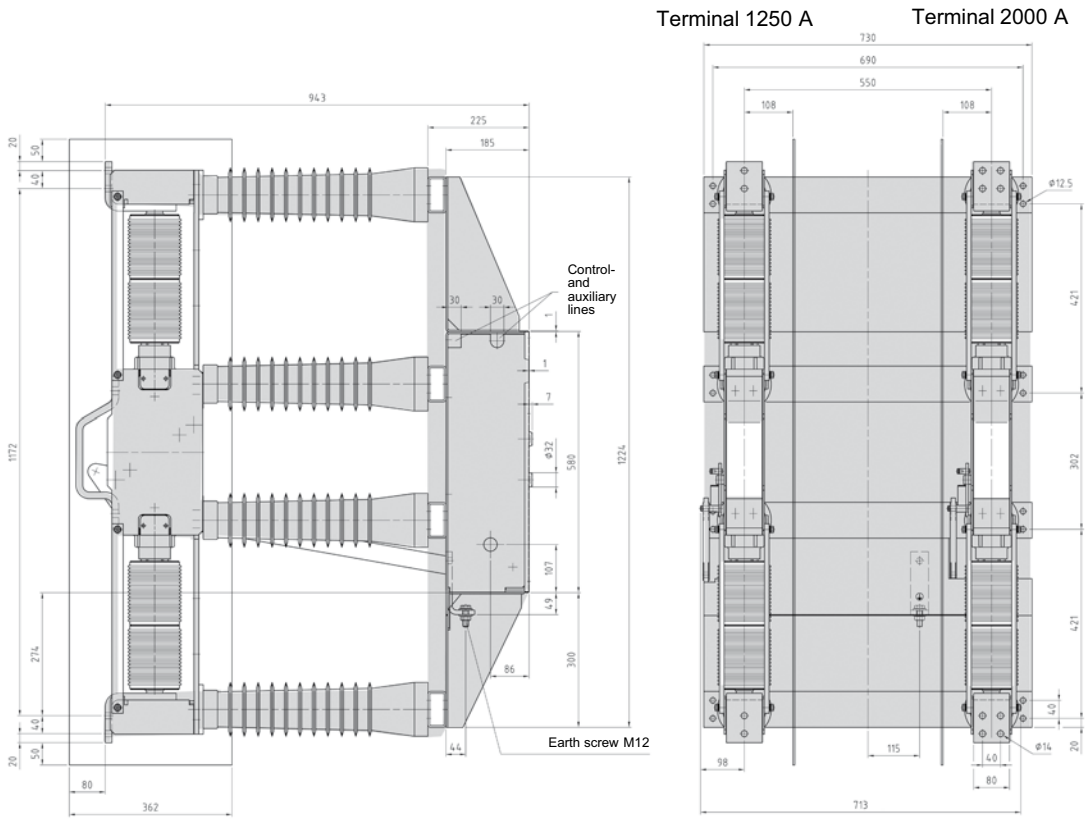

		VXB 6312/25-250	VXB 8020/25-250
Vacuum circuit-breaker	Rated voltage:	27 kV	27 kV
	Rated short-time current:	25 kA	31.5 kA
	Rated (normal) current:	1250 A	2000 A

Vacuum circuit-breaker dimensions

(Dimensions specified on request) (contd.)

Chassis frame for VAA 12 kV up to 24 kV

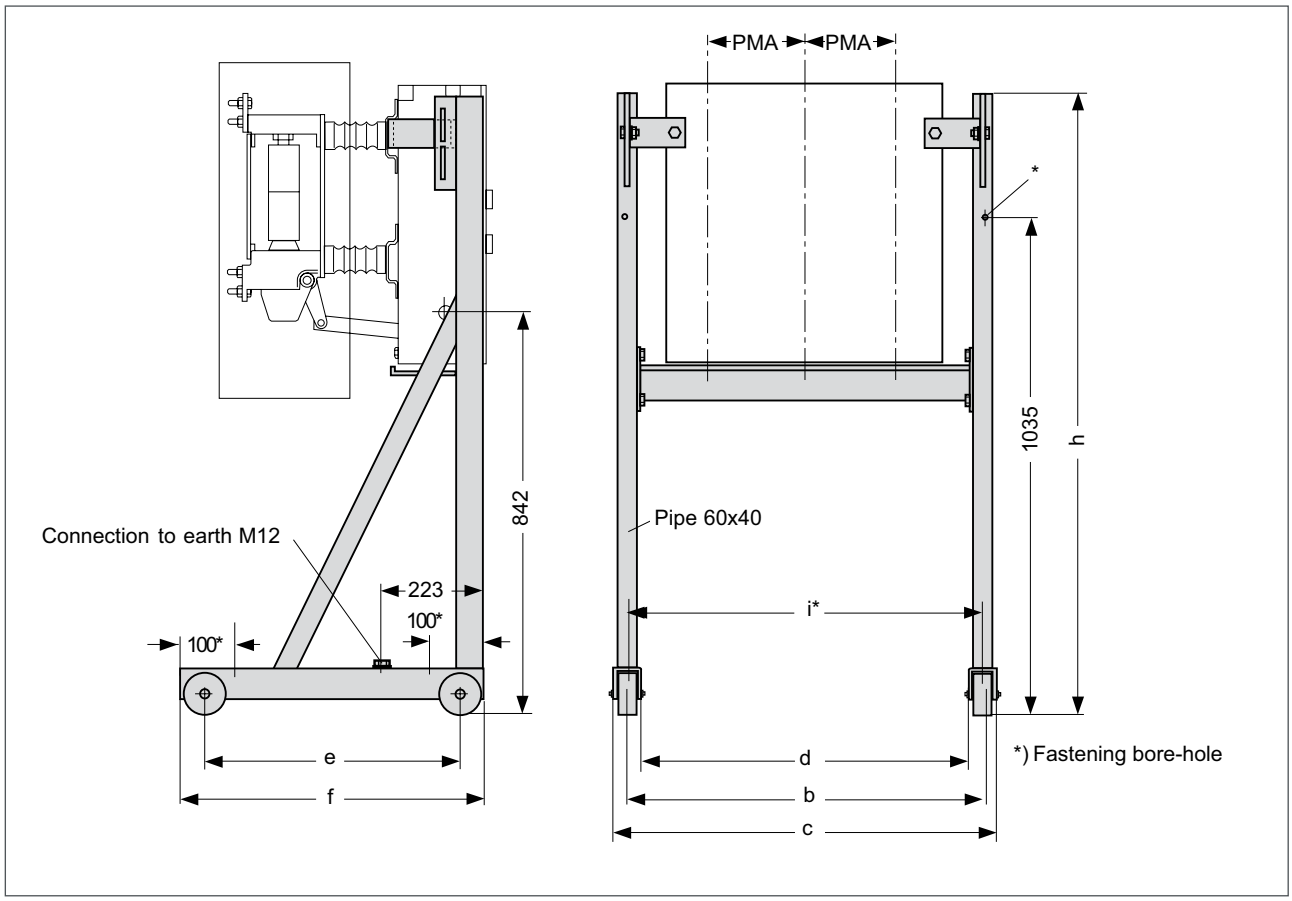

Rated voltage	Pole center spacing	Main dimensions						
kV	PMA	b	c	d	e	f	h	i
12	160	671	729	620	564	660	1285	675
12	210	771	829	720	564	660	1285	775
17.5	210	971	1029	920	564	660	1285	975
24	210	971	1029	920	564	660	1285	975
24	275	1101	1159	1050	564	660	1285	1105

Dimensions in mm

Vacuum circuit-breaker dimensions

(Dimensions specified on request) (contd.)

Chassis frame for VA, VXC, VAH and VAA 36 kV

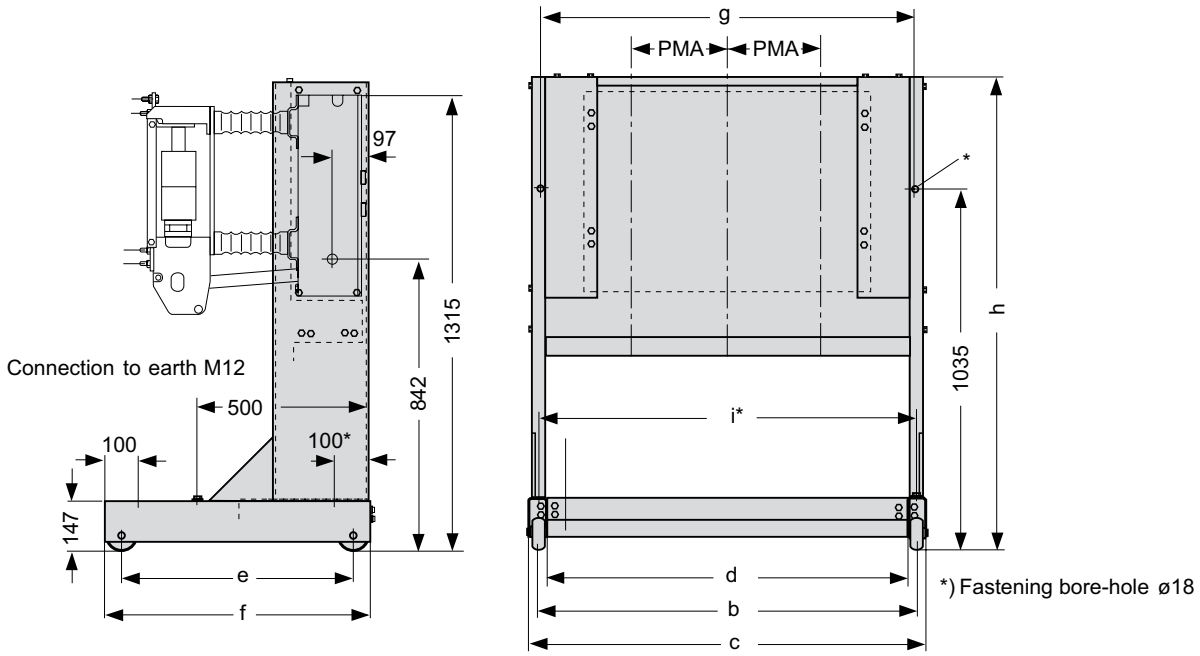

Rated voltage	Pole center spacing	Main dimensions							
kV	PMA	b	c	d	e	f	g	h	i
12	160	671	729	620	564	660	660	1355	660
12	210	771	829	720	564	660	760	1355	760
12 (VAH)	275	1101	1159	1050	674	770	1090	1355	1090
17.5	210	971	1029	920	564	660	960	1355	960
17.5 (VAH)	275	1101	1159	1050	674	770	1090	1355	1090
24	210	971	1029	920	564	660	960	1355	960
24	275	1101	1159	1050	564	660	1000	1355	1090
36	275	1321	1379	1270	674	770	1315	1355	1310
36	400	1571	1629	1520	674	770	1566	1355	1560
Double pole									
8012/36	400	1571	1629	1520	674	770	1566	1438	1560
8025/36	400	1571	1629	1520	674	770	1566	1480	1560

Dimensions in mm

Vacuum circuit-breaker dimensions

(Dimensions specified on request) (contd.)

Chassis frame for DB model

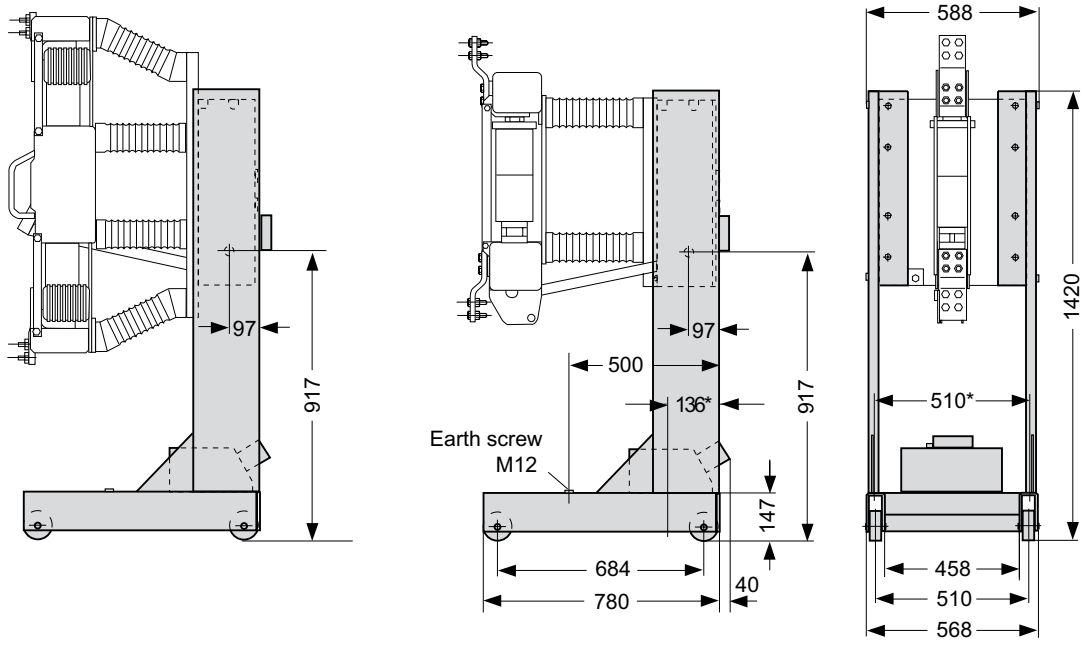

*) Fastening bore-hole ø18

Transport

Example for a shipping unit, type VA, VAA, VXC, VAH

Transport

The vacuum circuit-breakers are shipped with packaging.
The circuit-breaker‘s weight corresponds to the selection tables. On delivery, the circuitbreakers are fully assembled and adjusted.

The vacuum circuit-breakers must be lifted in accordance with the illustration. A rope with a diameter of 12 to 15 mm or a strap is required.

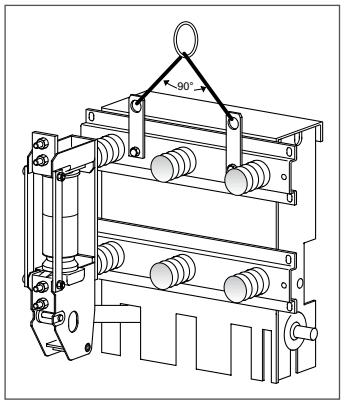

Transport VA, VAA, VXC

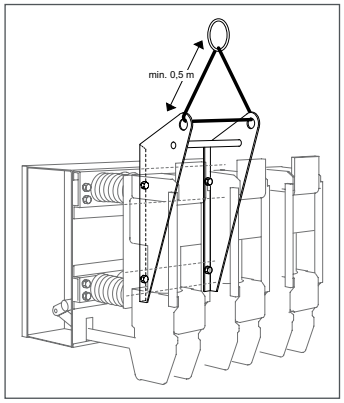

Transport VAH

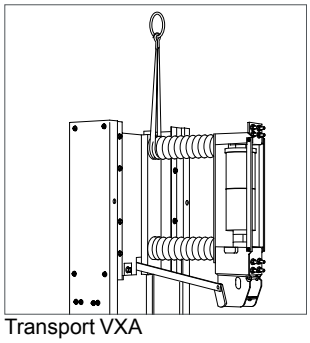

Transport VXA

Notes

Schneider Electric
35, rue Joseph Monier
CS 30323
92506 Rueil-Malmaison Cedex, France

RCS Nanterre 954 503 439
Capital social 896 313 776 €
www.schneider-electric.com

As standards, specifications and designs change from time to time, please ask for confirmation of the information given in this publication.

This document has been printed on ecological paper

Publishing: Schneider Electric
Design: Schneider Electric
Printing:

VA Auswahlliste EN

02-2011