EcoStruxure™
Innovation At Every Level

Powerlogic
Easergy P5

Catalog 2019
Network protection relays

se.com/easergy

Life Is On Schneider Electric

Note: Electrical power systems are dangerous, protection relays are defined and governed by international standards such as IEC 60255 “Measuring relays and protective equipment” and IEEE C37.97 “Protective relay applications to power systems buses”. Never attempt to install or operate protection relays or associated equipment without the necessary qualifications, training and tools. Exposure to electrical arc-flash incidents can be life threatening, no situation can ever be deemed fully safe. Standards such as NFPA 70E define important risk categorization and such standards identify both distance from, and energy of the arc incident to be important factors. In order to reduce the risk category and improve safety during arc-flash incidents, functionality is available in Easergy P5 protection relays to: i) to operate electrical panel from a safer distance via wireless communication, and ii) arc-flash protection functionality to detect and limit the arc energy by tripping the connected circuit breaker faster than in a conventional protection scheme.

General Contents

PM107471

Range description 4

Product description 40

Digital experience 62

Additional modules and accessories 68

Services 80

Ordering 84

Easergy P5
Range description

Easergy P5
Range description

Overview 10

Selection guide 11

Selection guide by functionality 12

Selection guide by application 14

Arc-flash application 14

Feeder / Incomer application 15

Motor application 16

Transformer application 17

Capacitor application 19

Functions and description 20

Communication 36

Examples of architectures 36

Redundancy protocols 37

Data exchanged 38

Cyber security 39

Cyber security systems 39

The Easergy P5 at a glance

The Easergy P5 is a protection relay for demanding medium-voltage applications. It offers users dedicated features for industry-leading protection relay functionality to reduce risks, improve reliability, all with advanced connectivity. Additionally, it can be used with a range of digital tools that make everyday operations simpler for users. The Easergy P5 is part of the PowerLogic range of power monitoring and control solutions and has been built on more than 100 years of experience in protection relays, including Sepam, MiCOM, and Vamp, renowned for their reliability and performance.

Industry-leading protection functions

- Built-in arc-flash protection functions (optional)
- Nearby control with a mobile application
- Latest cybersecurity built in, with IEC 62443 compliance and Achilles certification

Best-in-class reliability

- Withdrawable design for quicker maintenance
- Backup memory function enabling industry-leading 10 minute recovery time!
- Condition monitoring for reduced risk of power outage and maximized equipment life
- Extended equipment lifetime when used with EcoStruxure Asset Advisor

Maximized everyday simplicity

- Easier operation with digital tools including the EcoStruxure Power Device app
- Powerful communication with plug and play ports and seven protocols supported
- Scalable hardware making it easy to upgrade as your applications evolve

Enjoy a package of sought-after features in one device

The Easergy P5 presents a major step forward for protection relays, bringing a number of best-in-class features together in one device.

Built-in arc-flash protection functions

Arc-flashs will always exist when switching or during unexpected conditions. Arc-flash protection functions detect if an arc-flash exists, and take action within milliseconds to isolate the connected circuit breaker, meaning that arc-flash energy should not grow and cause unexpected outages or risks.

Advanced cybersecurity

IEC 62443 compliant, the P5 has been designed with an optional cybersecurity package. This means reduced exposure to cyber threats and improved operational security. By default, the Easergy P5 includes important features such as password management, port hardening, and secured communication compliant to the latest international standards.

Intuitive withdrawable design

With a handle built in as part of the design, the P5 can be quickly disconnected or exchanged to speed up maintenance. Wiring, data, communication, and settings (including backup) can be stored with the panel and will be there when the relay is reconnected.

Improved recovery time

When maintenance or testing is required, Easergy P5 helps dramatically decrease your outage recovery time. The backup memory can automatically restore settings, you can continue your operations in as little as 10 minutes.*

*Result of mean time to repair (MTTR) calculation conducted by Schneider Electric

Greater connectivity

The protection relay features seven communication protocols. This includes compliance with IEC 61850 ed. 1 and ed. 2, Modbus (serial/TCP), IEC 60870-5-103, IEC 60870-5-101, Ethernet/IP, and DNP3 (serial/TCP). Additionally, thanks to the P5's modular design, communication ports can be added at any time to enable you to upgrade your device in line with future network evolutions.

Make everyday operations easier with digital tools

The Easergy P5's industry leading protection features are complemented by a comprehensive set of tools available on mobile devices such as smartphones or tablets, and desktop computers. This means you get simpler installation, configuration, and maintenance, enabling you to save time and money. Nearby control and monitoring allows users to fully operate the device via wireless communication, from a safer distance.

Digital tools for the Easergy P5 include:

- The EcoStruxure Power Build – Medium Voltage online ordering tool for quicker and easier ordering
- The eSetup Easergy Pro software with virtual injection testing
- An embedded web server, allowing easy and fast settings changes
- The EcoStruxure™ Power Device app for simpler and safer operation and maintenance
- The mySchneider app, a simple way to access support and product data just by flashing the QR code on the device

As an EcoStruxure-ready solution, the Easergy P5's digital benefits can be taken even further with best-in-class monitoring of substation equipment health. For example, when paired with EcoStruxure Asset Advisor software, users get data for predictive maintenance, which helps them reduce OpEx, speed up processes, and boost efficiency.

Take the Easergy P5 further with EcoStruxure

EcoStruxure, Schneider Electric's IoT-enabled, open and interoperable architecture and platform, brings together Connected Products, Edge Control, and Apps, Analytics & Services. EcoStruxure connected products deliver enhanced value around safety, reliability, efficiency, sustainability, and connectivity.

450 000

EcoStruxure systems deployed since 2007 with the support of our 9,000 system integrators

EcoStruxure ready

Efficient asset management

Boost your efficiency and reduce downtime using predictive maintenance tools

24/7 connectivity

Make better informed decisions with real-time data that's available everywhere, anytime

Enhanced safety

Advanced features designed-in based on well-known designs, experience and technology

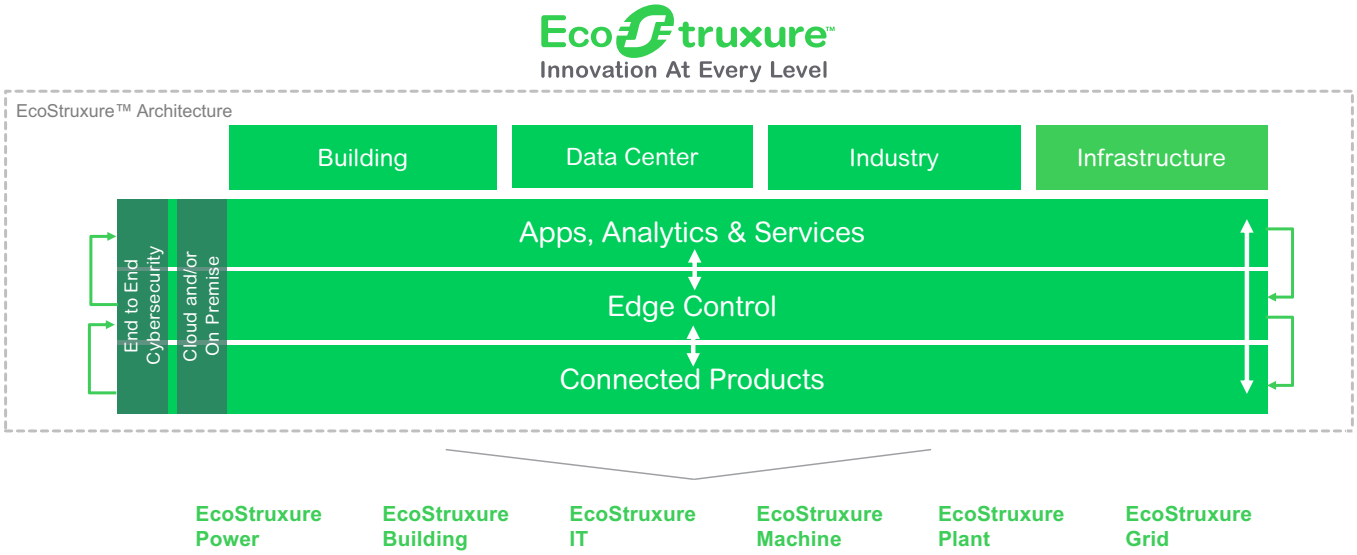

Overview

Easergy P5 protection relay is based on proven technology concepts and developed in close cooperation with customers, so it's built to meet your toughest demands. It's available in two sizes to best fit your needs:

- The Easergy P5 features a modular design that allows user-defined conventional protection and arc-flash protection solution
- The Easergy P5 embeds latest cybersecurity functionality to prevent intentional miss-use and cyber-attacks.
- The Easergy P5 enables fast replacement with enhanced safety thanks to the withdrawability and the back-up memory that automatically restore parameters without using any configuration tool.

Easergy products are designed to be user friendly, a feature that is proven in our customer reports day after day. You'll benefit from features that include:

- A complete set of protection functions, related to the application
- Arc-flash detection in P5x30 models
- Dedicated circuit breaker control with single-line diagram, push buttons, programmable function key and LEDs, and a customizable alarm
- Multilingual HMI for customized messaging
- Settings tool relay management software for setting parameters, configuring, and network fault simulation
- Both serial and Ethernet communication, including redundancy
- IEC 61850 standard Ed.1 & Ed.2

PM107437

PM107451

Easergy P5 is a family of digital protection relays for distribution networks dedicated to:

- Critical buildings and Industry:
  - Healthcare
  - Transportation
  - Industrial buildings
  - Data Center
- Utilities - Energy distribution
- Large sites:
  - Oil and Gas
  - Mining
  - Mineral and Metals
  - Water

Range overview

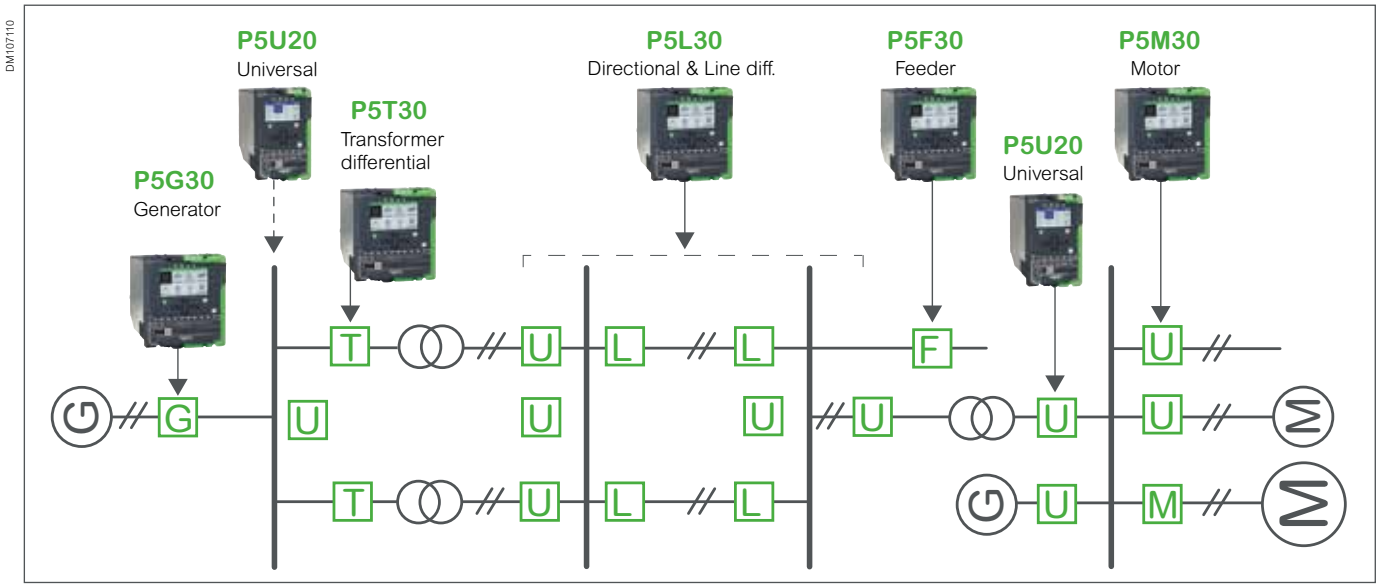

Selection guide

Easergy P5 contains two main devices, each with specific functions to address your needs in a one-box design, regardless of application.

		Easergy P5x20		Easergy P5x30
		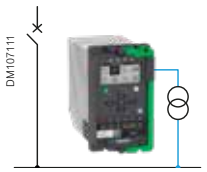	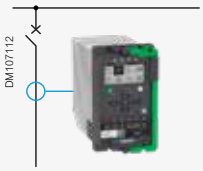	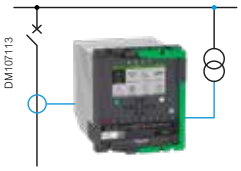
Voltage		P5V20	-	-
Feeder		-	P5U20	P5F30 with directional
Transformer				-
Motor				P5M30
Characteristics				
Measuring inputs	Phase current	-	1/5A CT (x3)	1/5A CT (x3) (*) or LPCT (x3) (*)
	Residual current	-	1/5A CT & 1A CT or CSH	1/5A CT & 1A CT or CSH
	Voltage	VT (x4)	-	VT (x4) (*) or LPVT (x4) (*)
Arc-flash sensor inputs		-		0 to 6 point sensors
Digital	Inputs	4 to 10		4 to 22
	Outputs	3 to 7 + WD		3 to 15 + WD
Analog	Inputs	-		-
	Outputs	-		-
Temperature sensor input		-	0 to 16 (external module)	0 to 16 (external modules)
Front ports		USB device and USB host		USB device and USB host
Nominal Power Supply		24-250 VDC ; 100-230 VAC		48-250 VDC ; 100-230 VAC
Ambient temperature, in service		-40 to 70°C (-40 to 158°F)		-40 to 70°C (-40 to 158°F)
Communication				
	Extension + Backup memory	●		●
	Serial	●		●
	Ethernet	●		●
	2nd Ethernet	-		●
Protocols	IEC 61850 Ed.1 & Ed.2	●		●
	IEC 60870-5-103 & 101	●		●
	DNP3 Ethernet	●		●
	DNP3 serial	●		●
	Modbus Ethernet	●		●
	Modbus serial	●		●
	EtherNet IP	●		●
Redundancy protocols	RSTP	●		●
	PRP / HSR	●		●
Others				
Control		6 controlled + 2 monitored objects Mimic		6 controlled + 2 monitored objects Mimic
Logic (Matrix + Logic Equations)		●		●
Cyber security		●		●
Draw-out device		●		●
Hardware dimensions (H/W/D)		102/176/219 mm 4.01/6.93/8.62 in		152/176/219 mm 6.0/6.93/8.62 in

(*) Contact us for availability

Selection guide by functionality

Protection Functions	ANSI code	Logical Node	P5V20	P5U20	P5F30	P5M30
Current protection						
Phase overcurrent	50/51	OC**PTOC**	-	3	3	3
Earth/ground fault overcurrent (1)	50N/51N	EF**PTOC**	-	5 / 8	5 / 8	5 / 8
Directional phase overcurrent	67	DOC**PTOC**	-	-	4	4
Directional earth/ground fault overcurrent	67N	DEF**PTOC**	-	-	3	3
Transient intermittent/ground fault	67NI	IOIO**PTEF**	-	-	1	-
Negative sequence overcurrent	46 (I2/I1)	NEG**PTOC**	-	1	1	1
Current unbalance, Broken conductor	46BC (I2)	UIBC**PTOC**	-	1	1	-
Breaker failure	50BF	CBFP**PIOC**	1	1	1	1
Phase undercurrent	37	UC**PTUC**	-	1	-	1
Switch on to fault (SOTF)	SOFT		-	1	1	1
Cold load pickup (CPLU)	CLP		-	1	1	1
Voltage protection						
Undervoltage	27	UV**PTUV**	3	-	3	3
Overvoltage	59	OV**PTOV**	3	-	3	3
Earth/ground fault overvoltage	59N	UO**PTOV**	3	-	3	3
Frequency protection						
Over and/or underfrequency	81	OFUF**PTOF**	2	-	2	2
Underfrequency	81U	UF**PTUF**	2	-	2	2
Rate of change of frequency	81R	DFDT**PFRC**	2	-	2	-
Thermal protection						
Thermal overload	49	THF**PTTR**	-	1	1	1
Temperature monitoring	38/49T	RTD**GAPC**	-	16	16	16
Power protection						
Wattmetric earth/ground fault	32N	EF**PDOP**	-	-	2	2
Directional active underpower	37P	REVP**PDOP**	-	-	2	2
Rotating machine protection						
Frequent start inhibition	66	FST**PMRI**	-	1	-	1
Excessive start time, locked rotor	48/51LR	STAL**PMSS**	-	1	-	1
Positive sequence undervoltage	27P	UVPS**PTUV**	2	-	-	2
Line protection						
Fault locator	21FL	FL**RFLO**/ SC**RFLO**	-	-	1	-
Auto-Recloser	79	AR**RREC**	-	1	1	-
Transformer protection						
Magnetizing inrush detection	68H2	HAR2**PTOC**	-	1	1	1
Fifth harmonic detection	68H5	HAR5**PTOC**	-	1	1	1
Capacitor protection						
Capacitor bank unbalance	51C		-	2	2	-
Capacitor overvoltage	59C		-	1	1	-
Other protection						
Arc-flash detection	50ARC	ARCM**PIOC**	-	-	8	8
Programmable stages	99	PS**GAPC**	8	8	8	8
Programmable curves			3	3	3	3
Control, monitoring, supervision						
Synchronization check	25	**RSYN**	1	-	1	-
Lockout relay	86		1	1	1	1
CT supervision	60	CTS**GGIO**	-	1	1	1
VT supervision	60	VTS**GGIO**	1	-	1	1
Setting groups		LLN0/SP.SG-CB	4	4	4	4

Selection guide by functionality

Control functions	P5V20	P5U20	P5F30	P5M30
Switchgear control and monitoring	6	6	6	6
Switchgear monitoring only	2	2	2	2
Programmable switchgear interlocking	●	●	●	●
Local control on single-line diagram	●	●	●	●
Local control with O/I keys	●	●	●	●
Local/remote function	●	●	●	●
Function keys	1	1	7	7
Custom logic (logic equations)	●	●	●	●
Control with Smart App	●	●	●	●

Measurement functions	P5V20	P5U20	P5F30	P5M30
RMS current values		●	●	●
RMS voltage values	●		●	●
RMS active, reactive and apparent power			●	●
Frequency	●	●	●	●
Fundamental frequency current values		●	●	●
Fundamental frequency voltage values	●		●	●
Fundamental frequency active, reactive and apparent power values			●	●
Power factor			●	●
Energy values active and reactive			●	●
Demand values: phase currents		●	●	●
Demand values: active, reactive, apparent power and power factor			●	●
Maximum demand values: phase currents		●	●	●
Minimum and maximum demand values: RMS phase currents		●	●	●
Minimum and maximum demand values: active, reactive, apparent power and power factor			●	●
Maximum demand values over the last 31 days and 12 months: active, reactive, apparent power			●	●
Minimum demand values over the last 31 days and 12 months: active, reactive power			●	●
Maximum and minimum values: currents		●	●	●
Maximum and minimum values: voltages	●		●	●
Maximum and minimum: frequency	●	●	●	●
Maximum and minimum: active, reactive, apparent power and power factor			●	●
Harmonic values of phase current and THD		●	●	●
Harmonic values of voltage and THD	●		●	●
Voltage sags and swells	●		●	●

Logs and records	P5V20	P5U20	P5F30	P5M30
Sequence of event record	●	●	●	●
Disturbance record	●	●	●	●
Tripping context record	●	●	●	●
Relay maintenance data log	●	●	●	●
Security data log	●	●	●	●

Monitoring functions	ANSI code	P5V20	P5U20	P5F30	P5M30
Trip circuit supervision	74	1	1	1	1
Circuit breaker monitoring		1	1	1	1
Relay monitoring		●	●	●	●

Selection guide by application

Arc-flash application

Busbar arc-flash protection

• Arc-flash protection, activated by overcurrent and light signals, or light signals alone

Centralized busbar arc-flash protection

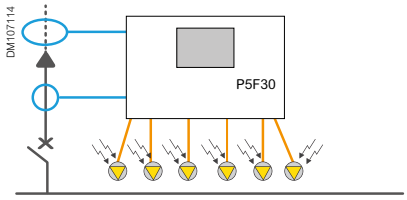

- Up to 6 light point sensors to monitor the busbar

De-centralized busbar arc-flash protection

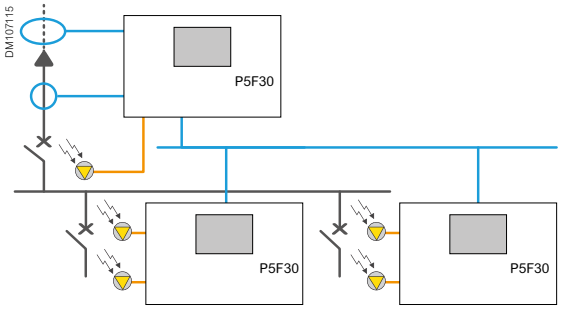

- Up to 6 light point sensors in each relay
- Transmission of light detection signals via digital I/O or IEC 61850 GOOSE messages

Zone arc-flash protection

• Up to 8 arc-flash protection stages in each relay
• Transmission of signals via digital I/O or IEC 61850 GOOSE messages

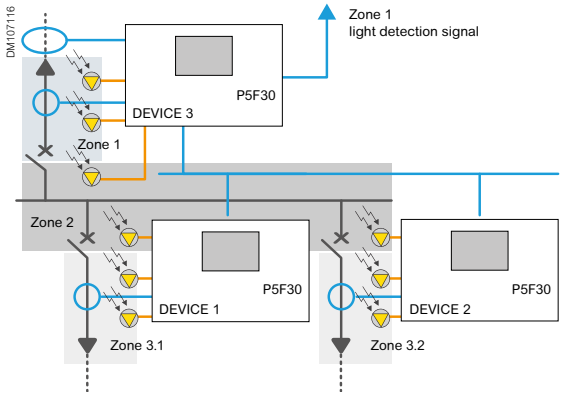

In this application example, the arc-flash sensor for zone 3.1 is connected to Device 1. If the arc-flash sensor awakens and simultaneously Device 3 sends a current signal, the zone 3.1 is isolated by the outgoing feeder breaker.

The arc-flash sensor for zone 3.2 is connected to Device 2 and operates the same way.

The arc-flash sensors for zone 2 are connected to Device 1, 2, or 3. If a sensor awakens in zone 3, the light-only signal is transferred to Device 3, which then trips the main circuit breaker.

An eventual arc-flash fault in zone 1 does not necessarily activate the current element in Device 3. However, arc-flash detection can be achieved by using the light-only principle. If an arc-flash occurs in cable termination, zone 1, an inter-trip signal is sent by Device 3 to the upstream circuit breaker.

Selection guide by application

Feeder / Incomer application

Outgoing protection

• Feeder overcurrent protection
• Feeder overload protection

Feeder protection

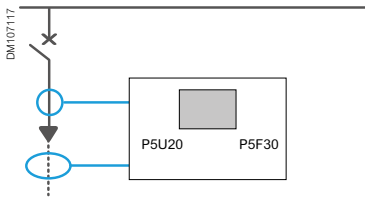

- Feeder earth/ground fault overcurrent

Overhead line protection

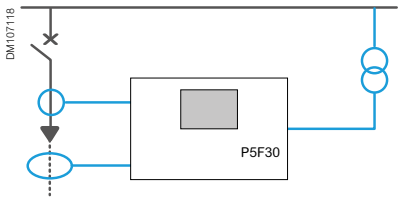

- Directional phase and earth/ground fault overcurrent
- Recloser
- Fault locator

Protection of feeders with metering

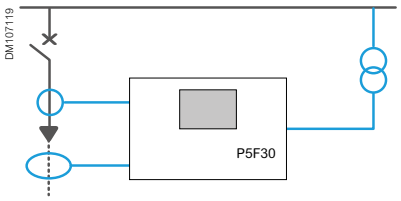

- Power and energy measurement
- Min and max demand values over the last 31 days and 12 months

Incomer protection

• Busbar overcurrent protection

Incomer protection without voltage monitoring

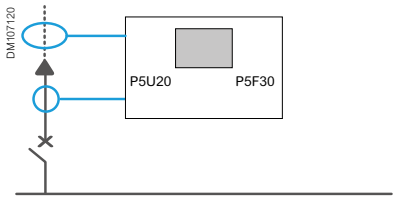

- Earth/ground fault overcurrent

Incomer protection with voltage and frequency monitoring

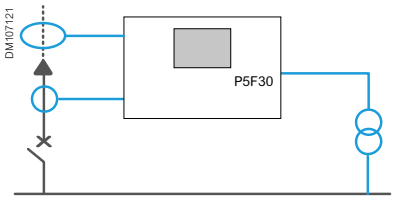

- Under/over voltage
- Frequency, rate of change of frequency

Incomer protection with power quality monitoring

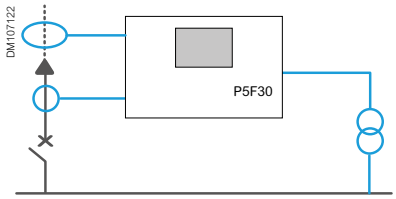

- Voltage and frequency min and max values
- Voltage harmonic values and THD
- Voltage sags and swells

Parallel incomer protection

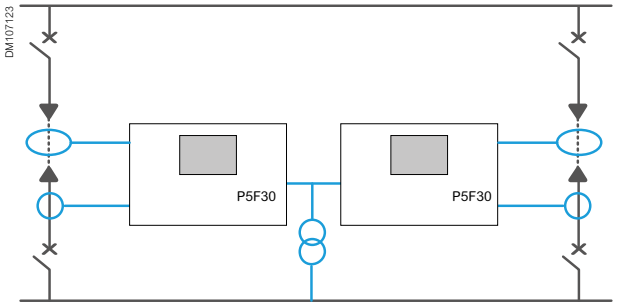

- Directional phase overcurrent
- Directional earth/ground fault overcurrent

Selection guide by application

Feeder / Incomer application

Voltage monitoring

- **Under/over voltage protection**
- **Earth/ground fault overvoltage**
- **Under/over frequency protection**

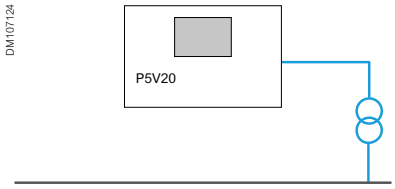

- Load-shedding-specific function: rate of change of frequency

Selection guide by application

Motor application

Motor protection

- **Motor overcurrent and earth/ground fault overcurrent**
- **Thermal overload**
- **Motor start-up supervision**
- **Motor restart inhibition**

Motor protection without voltage monitoring

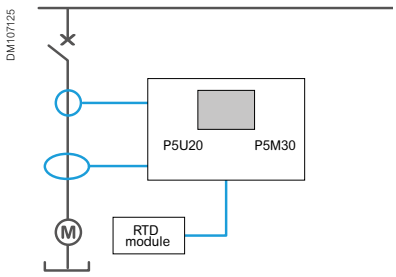

- Temperature measurement (stator, bearings)

Motor protection with voltage monitoring

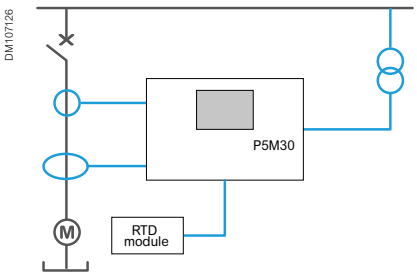

- Undervoltage protection

Selection guide by application

Transformer application

Transformer feeder protection

- **Transformer overcurrent and earth/ground fault overcurrent protection**
- **Thermal overload protection**
- **External trip from thermostat/Buchholz**

Transformer feeder protection without voltage monitoring

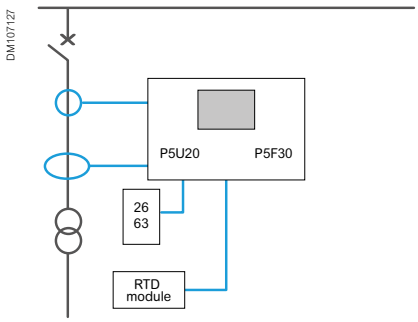

- Temperature measurement (ambient, oil)

Transformer feeder protection with voltage monitoring

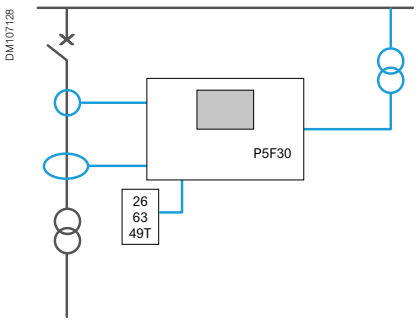

- Over and undervoltage protection

Transformer feeder protection with additional current measurement

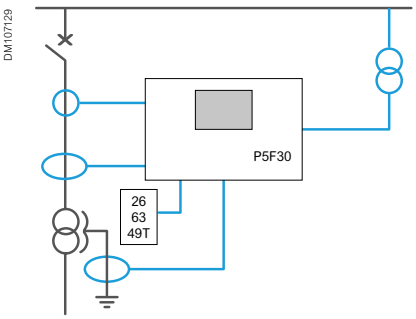

- Tank earth/ground leakage protection

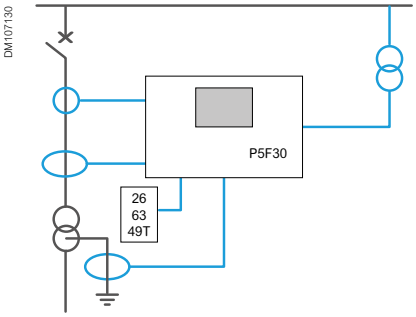

- Earth/ground fault overcurrent on the secondary side

Selection guide by application

Transformer application

Transformer incomer protection

- **Busbar overcurrent protection**
- **Inter-trip from primary CB protection**

Transformer incomer protection without voltage monitoring

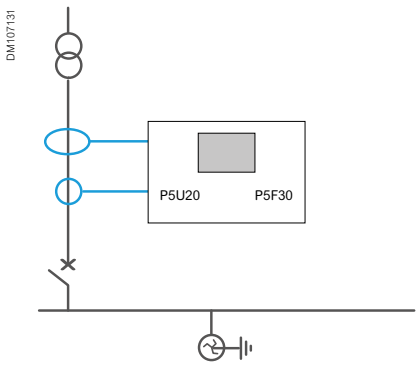

- Transformer earth/ground fault overcurrent

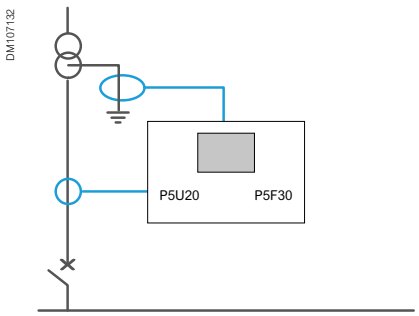

- Earth/~~ground~~ fault overcurrent for transformer and back-up protection

Transformer feeder protection with voltage monitoring

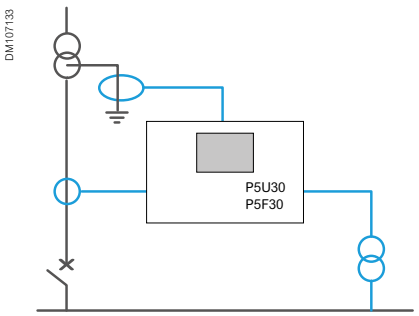

- Over and undervoltage protection
- Power and energy measurement
- Min and max demand values over the last 31 days and 12 months

Parallel transformer incomer protection

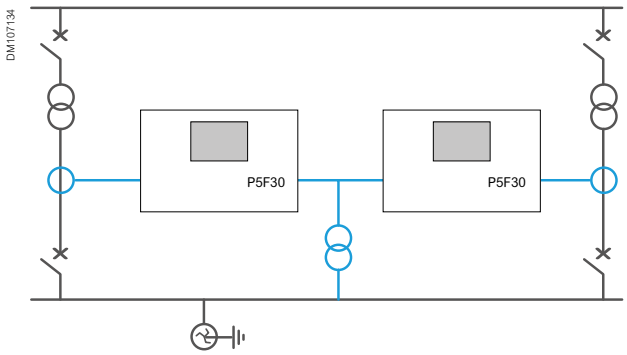

- Directional phase overcurrent

Selection guide by application

Capacitor application

Capacitor bank protection

• Capacitor bank overcurrent and earth/ground fault protection
• Capacitor bank overload protection

Capacitor bank protection without voltage monitoring

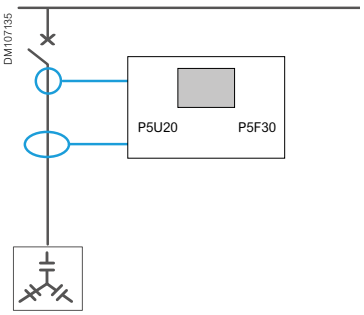

- Capacitor overvoltage protection, based on current measurement and harmonics
- Current harmonic values and THD

Capacitor bank protection with voltage monitoring

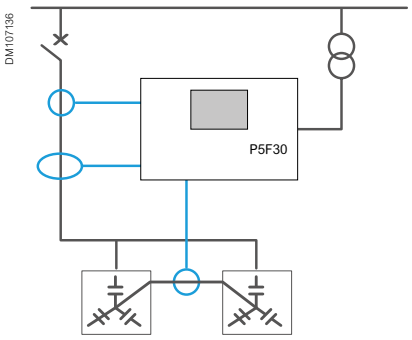

- Capacitor bank unbalance
- Overvoltage
- Current and voltage harmonic values and THD

Protection of harmonic filters

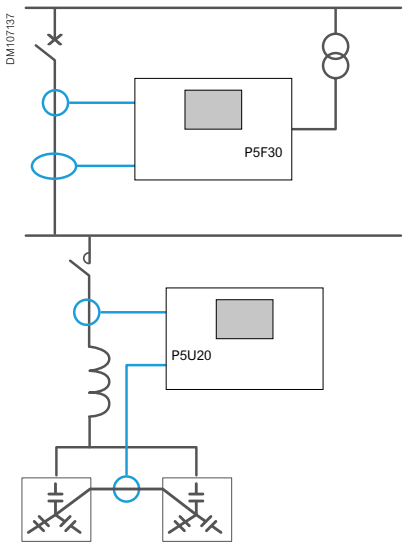

- Overvoltage
- Capacitor bank unbalance
- Capacitor overvoltage protection, based on current measurement and harmonics
- Current harmonic values and THD

Functions and description

Fault locator - ANSI 21FL

The function can be used to locate a short-circuit fault and an earth/ground fault in radially operated networks. The fault location is given as in reactance (ohms) and kilometers or miles. The fault value can then be exported, for example, with an event to a Distribution Management System (DMS). The system can then localize the fault. If a DMS is not available, the distance to the fault is displayed as kilometers and as a reactance value.

Functions	Settings
Pick-up setting [xIn]	0.10 to 5.00
Line reactance	0.010 to 10.000 Ohm / km
Earth/ground factor	0.000 to 10.000
Earth/ground factor angle	-60° to +60°

Synchro-check - ANSI 25

This function checks the phase-phase voltages on both sides of CB and allows CB closing when the voltage phase angle, magnitude, frequency differences are all within permitted limits.

- 7 operation modes about no-voltage condition (dead line, dead bus) are provided.
- Synchronous mode is provided, where the frequency difference is less than 0.3Hz.
- Asynchronous mode is provided, where CB close time is compensated.
- Independent settings for voltage phase angle, magnitude, frequency differences.

Functions	Settings
Synchronization mode	Off, Async, Sync
Voltage check mode	DD, DL, LD, DD/DL, DD/LD, DL/LD, DD/DL/LD
CB close time	0.04 to 0.6s
UDEAD limit setting	1% to 120% Un
ULIVE limit setting	1% to 130% Un
Frequency difference	0.01 to 1.0Hz
Voltage difference	1% to 60% Un
Phase angle difference	2º to 90º
Request timeout	0.1 to 600s

Under voltage - ANSI 27

This function is applied to detect the abnormal system voltage decrease to trigger the automatic load shedding or voltage source transfer or trip out the motor loads to avoid motor stall. This protection works with the minimum phase to phase voltage.

- 3 independent stages with define time are provided.
- Low voltage self-blocking will operate when the maximum phase to phase voltage is less than 10%Un.

Functions	Settings	Time delay	
Under voltage	Off, Async, Sync		
Pick-up setting	20% to 120% Un	Trip:	0.04 to 300 s
		Reset1:	0.3 to 300 s
Reset ratio	0.1% to 20%		

Note1: the reset time delay setting is only available for stage 1

Functions and description

Positive sequence under voltage - ANSI 27P

This function is applied to detect the insufficient or unbalanced system voltage and detect the reverse rotation.

- 2 independent stages with define time are provided.
- Low voltage self-blocking will operate when the positive sequence voltage is less than 10% Un.

Functions	Settings	Time delays
Pick-up setting	20% to 120% Un	0.08 to 300 s
Low voltage self-blocking	2% to 100% Un	

Directional power - ANSI 32

This function can be used as underpower protection (e.g. loss of load of a motor) or as reverse power protection (e.g. power generation by a motor if supply is disconnected). It starts if measured active power drops below the set threshold and operates with definite time delay.

- 2 independent stages
- Undervoltage blocking if maximum voltage is less than 5% Un.

Functions	Settings	Time delay
Pick-up setting	-200% to 200% Sn(1)	0.3 to 300.0 s

(1) Sn = √3 Un In

Wattmetric earth/ground fault - ANSI 32N

This function detects single phase to earth/ground faults in Petersen coil compensated power systems. It operates on active residual power. Using memory mode allows also operation on intermittent earth/ground faults.

- Neutral displacement voltage U_0> element to enable function.
- Settable forward/reverse direction.
- Operating characteristic with settable minimum active power and sector angles.
- Dedicated blocking input.
- Dedicated input to bypass operate time delay.

Functions	Settings	Time delay
Direction mode	Direction mode	
Pick-up setting I_0U_0>	Pick-up setting I_0U_0>	0.05 to 300.00 s
U_0> setting	U_0> setting	
Sector angle setting	Sector angle setting	
Memory mode	Memory mode	
Memory U_0>	Memory U_0>	Mem. hold time: 0.05 to 10.00 s
		Mem. oper. Time: 0.00 to 100.00 s
SOL operation	SOL operation	
SOL operation delay	SOL operation delay	0.05 to 300.00 s

Functions and description

Phase undercurrent - ANSI 37

This function is typically used to detect defects in motor drives based on loss of load detection because of significant drop of current. It measures the fundamental component of the phase currents.

- One stage.
- Low-current blocking if maximum current is less than 15% In.

Functions	Settings

Temperature monitoring - ANSI 38

This function is used to detect abnormal heat rise by directly measuring the temperature inside equipment (transformer, motors, generators, …) with RTD sensors.

- Two independent set points: alarm and tripping.
- Inbuilt RTD supervision (shorting, open loop).

Functions	Settings
Pick-up setting	0 to 180 °C (32 to 356 °F)

Unbalance overcurrent - ANSI 46

This function provides greater sensitivity to detect phase to phase faults at the end of long lines or behind transformer. It can also be used for machine protection (against temperature rise caused by unbalance power supply, phase inversion, or loss of phase).

- One stage.
- DT or IDMT operating time.

Functions	Settings	Time delay
Pick-up setting	0.02 to 5.00 In	0.07 to 300.00 s
Delay curve family	IEC, IEEE, IEEE2,RI, programmable (prg.)	
Delay type	IEC: NI, VI, EI, LTI, Parameters	
	IEEE: VI, EI, LTI, LTEI, LTVI, MI, STI, STEI, Parameters	
	IEEE2: NI, VI, EI, MI, Parameters	
	RI: RI, RXIDG	
	Prg.: configurable using constant A, B, C, D, E in delay function	
Inv. time coefficient k	0.05 to 20.0 for IEC and RI	
	0.50 to 20.0 for RXIDG, IEEE and IEEE2	

Unbalance overcurrent, broken conductor - ANSI 46BC

This function is applied to detect the broken conductor condition, based on the ratio between the negative sequence current and the positive sequence current.

- 1 stage with define time is provided.
- Low voltage self-blocking will operate when the positive sequence voltage is less than 10%Un

Functions	Settings	Time delay
Pick-up setting I_2/I_1 >	2% to 70%	0.07 to 300s

Excessive start time - ANSI 48

Protection of motors against overheating caused by motor excessive start time due to heavy motor load or too low voltage.

- Motor start detection is based on “Current” or “CB Position” or “Both”.
- Operation with definite time delay or inverse time delay.

Functions	Settings	Time delay
Motor start detection current	1.3 to 10.0In	
CB position detection mode	CBPos, Current, CBPos&Cur	
Delay type	DT, INV	
Motor start time		1 to 300.0s

Functions and description

Thermal overload protection for feeder - ANSI 49F

This function is applied to detect conditions where thermal damage may be caused by overloads on cables. The thermal capacity is calculated by the thermal replica according to IEC60255-149. The equivalent current for the thermal replica is the maximum RMS current of 3 phases.

- Independent settable alarm stage and trip stage are provided.
- Current based setting mode and temperature based setting mode are provided.
- Temperature sensor can be applied for ambient temperature under temperature based mode.
- A digital input can be applied to inhibit the thermal overload protection.

Functions	Settings
Basic current setting	0.1In to 4.0In
Factor k	1.0 to 1.5
Heating time constant	1.0 min to 1000 min
Thermal alarm value	50% to 100%
Reserve time thermal alarm	1.0 min to 1000 min
Temperature based mode	Current, Ambient
Nominal ambient temperature	-40ºC to 300ºC
Max object temperature	-40ºC to 300ºC
Alarm object temperature	0ºC to 300ºC
Min object temperature	-40ºC to 300ºC
Default object temperature	-40ºC to 300ºC
Thermal level initiation	0 to 90%

Functions and description

Thermal overload protection for motor - ANSI 49M

This function is applied to detect conditions where thermal damage may be caused by overloads on cables. The thermal capacity is calculated by the thermal replica according to IEC60255-149. The equivalent current for the thermal replica considers the maximum RMS current of 3 phases and the negative phase sequence current with a settable weighting coefficient.

- Independent settable alarm stage and trip stage are provided.
- Heating time constant and cooling time constant are provided.
- Current based setting mode and temperature based setting mode are provided.
- Temperature sensor can be applied for ambient temperature under temperature based mode.
- A digital input can be applied to inhibit the thermal overload protection.

Functions	Settings
Basic current setting	0.1In to 4.0In
Factor k	1.0 to 1.5
Heating Time constant	1.0min to 1000min
Time constant for motor start	1.0min to 1000min
Cooling time constant	1.0min to 1000min
Thermal alarm value	50% to 100%
Reserve time thermal alarm	1.0min to 1000min
Temperature based mode	Current, Ambient
Nominal ambient temperature	-40ºC to 300ºC
Max object temperature	-40ºC to 300ºC
Alarm object temperature	0ºC to 300ºC
Min object temperature	-40ºC to 300ºC
Default object temperature	-40ºC to 300ºC
Thermal level initiation	0 to 90%

Functions and description

Arc-flash - ANSI 50ARC

This function is used to detect and minimize the effects of an internal arcing fault by using e.g. circuit breaker (CB) to mitigate the fault.

- Eight independent arc-flash stages
- GOOSE communication
- 3 to 6 arc-flash sensors available.

Functions	Settings
I>int.	On, Off
Io>int.	On, Off
GOOSE NI	On, Off
Virtual output 1 to 6	On, Off
Arc-flash stage 1 to 8	On, Off
Pick-up setting, I>Int. [xIn]	0.50 to 8.00
Pick-up setting, Io>Int.	0.10 to 5.00
Trip delay [ms]	0 to 255
Hold time [ms]	20 to 2500

Breaker failure - ANSI 50BF

The circuit breaker failure function (CBF) can be used to operate any upstream circuit breaker (CB) if the programmed output matrix signals, selected to control the main breaker, have not disappeared within a given time after the initial command.

- Two circuit breaker controls.

Functions	Settings	Time delay
Pick-up setting [xIn]	0.02 to 4.00	
Pick-up setting [xIn]	0.05 to 4.00	Io< for CHS
	0.02 to 4.00	Io< for CT
	0.002 to 4.00	Io< for VSEF
Time 1,2 operation delay	0.02 to 50 s	

Switch onto fault (SOTF) - ANSI 50HS

This function is applied to provide the fast trip based on the instantaneous overcurrent protection, out when the CB is closed against a faulty line.

- 1 stage instantaneous overcurrent is provided.
- CB Open/Dead line detection is based on the low current threshold 0.02In or digital input.
- SOFT active duration after CB closure is settable.

Functions	Settings	Time delay
Pick-up setting	1.0 to 40.0In	
Dead line detection delay		0 to 60.0s
SOFT active time		0.1 to 60.0s

Functions and description

Phase overcurrent I> or I>> or I>>> - ANSI 50/51

These functions can be used against short circuit faults and heavy overloads. The overcurrent function measures the fundamental frequency component of the phase currents. The protection is sensitive to the highest of the three phase currents. Whenever this value exceeds the user's start setting of a particular stage, this stage starts and a start signal is issued. If the fault situation remains on longer than the operation delay setting, a trip signal is issued.

- Overcurrent protection sensitive to the highest phase current measured
- Three independent stages
- Four setting groups on each.

I> Functions	Settings
Pick-up setting [xIn]	0.05 to 20.00
Delay curve family	DT, IEC, IEEE, IEEE2, RI, Prg1, Prg2, Prg3
Delay type	DT, NI, VI, EI, LTI, LTEI,
	LTVI, MI, STI, STEI, RI,
	RXIDG, Parameters, -
Operation delay [s]	0.03 to 300.00
Inv. time coefficient	0.05 to 20.00
Reset time [s]	0.03 to 100.00

I>> Functions	Settings
Pick-up setting [xIn]	0.10 to 20.00
Delay curve family	DT, IEC, IEEE, IEEE2, RI, Prg1, Prg2, Prg3
Delay type	DT, NI, VI, EI, LTI, LTEI,
	LTVI, MI, STI, STEI, RI,
	RXIDG, Parameters, -
Operation delay [s]	0.03 to 300.00

I>>> Functions	Settings
Pick-up setting [xIn]	0.10 to 40.00
Operation delay [s]	0.03 to 300.00

Functions and description

Earth/ground fault overcurrent - ANSI 50N/51N

Earth/ground fault protection is based on the measured residual current from 1A/5A standard CT or CSH CT. Alternatively, it can also apply the calculated residual current.

- 2 independent stages with definite time or IDMT or customized curves. Another 3 stages with definite time
- 18 IDMT curves include IEEE, IEEE2, IEC, RI standardized IDMT curves and 3 customized curves.
- Inrush blocking, Cold load pick-up, Selective overcurrent logic are settable in the first 4 stages.

Functions	Settings
I0 input	I0, I0 CSH, I0 calc,
Pick-up setting	0.02 Ino to 10 Ino for measured input with EF CT
	0.02 Ino to 10 Ino for measured input with CSH CT
	0.05 In to 20 In for calculated I0
Delay curve family	DT, IEC, IEEE, IEEE2, RI, Prg1, Prg2, Prg3
IDMT delay type	IEC: NI, VI, EI, LTI
	IEEE: VI, EI, LTI, LTEI, LTVI, MI, STI, STEI
	IEEE2: NI, VI, EI, MI
	RI: RI, RXIDG
DT Operation delay	0.03 to 300s
Inv. Time coefficient k	0.05 to 20.0 for IEC, RI curves
	0.5 to 20.0 for RXIDG, IEEE and IEEE2 curves
Reset time	0.03 to 100s
Inrush blocking	Off, On
SOL Enable	Off, On
SOL operation delay	0.03 to 300s
SOL Inv. Time coefficient k	0.05 to 20.0 for IEC, RI curves
	0.5 to 20.0 for RXIDG, IEEE and IEEE2 curves
CLP Enable	Off, On
CLP pick-up value	0.02In to 20.0In
CLP operation delay	0.03 to 300s
CLP Inv. Time coefficient k	0.05 to 20.0 for IEC, RI curves
	0.5 to 20.0 for RXIDG, IEEE and IEEE2 curves

Functions and description

Capacitor bank unbalance - ANSI 51C

This function is used in double-wye-connected capacitor banks. The unbalance current is measured with a dedicated current transformer (like 5A/5A) between two starpoints of the bank.

- Standard earth/ground fault CT
- CHS core balance CT.

Functions	Settings	Time delay
Pick-up setting [pu]	0.02 to 10.00	
Operation delay [s]	0.03 to 300	DT

Locked rotor - ANSI 51LR

Protection of motors against overheating caused by motor rotor jam due to heavy motor load or a mechanical failure after the normal start.

- Operation with definite time delay or inverse time delay.
- Automatically blocked when the motor is starting.

Functions	Settings	Time delay
Pick-up setting	10% to 100.0%Istart	
Delay type	DT, INV	
Operation delay		1 to 300.0s

Overvoltage - ANSI 59

This function is applied to detect the abnormal higher system voltage or to check sufficient voltage for voltage source transfer. This protection works with the maximum phase to phase voltage.

- 3 independent stages with define time are provided.

Functions	Settings	Time delays	
Pick-up setting	50% to 150% Un	Trip:	0.04 to 300s
		Reset1:	0.03 to 300s
Reset ratio	0.1% to 20%		

Functions and description

Capacitor overvoltage - ANSI 59C

This function calculates the voltages of a three-phase Y-connected capacitor bank using the measured currents of the capacitors. No voltage measurements are needed.

Especially in filter applications, there are harmonics and depending on the phase angles, the harmonics can increase the peak voltage. This protection function calculates the worst-case overvoltage in per-unit values using Equation 7.10 according to IEC 60871-1 standard. Harmonics up to 15th are taken into account.

- 3 independent stages with define time.

Functions	Settings	Time delays
Pick-up setting UC>	0.10 to 2.50 UCLN	1.0 to 30.0 s
Rated L-N voltage UCLN	100 to 260000 V	
Capacitance per phase	1.00 to 650.00 µF	

Neutral voltage displacement - ANSI 59N

This function is used for general earth/ground fault detection and for (un)selective backup protection. It measures the fundamental component of the neutral displacement voltage.

- 3 stages with DT operating time
- Attenuation of the third harmonic by more than 60 dB
- Faster high-set stage U0>>>.

Functions	Settings	Time delays
Pick-up setting	2% to 120% Un_0	0.04 to 300.00 s

Motor restart inhibition - ANSI 66

This function prevents too frequent motor starts according to the definitions of the motor manufacturer, because every motor start heats it up considerably because the initial currents are significantly above the rated current.

- Settable number of starts per hour
- Settable minimum time between consecutive starts

Functions	Settings	Time delay
Time from motor start	0 min, 120 min	
Max. hot starts / hour	1 to 20	
Max. cold starts / hour	1 to 20	
Min. time between starts		0.0 to 100.0 min

Functions and description

Directional phase overcurrent - ANSI 67

This function provides directional short circuit protection.

- 4 independent stages, all with DT, 2 alternatively with IDMT operating time
- Settable directionality
- Directional voltage memory (3.2 s)
- Cold Load Pickup (CLP) and inrush current handling
- Selective Overcurrent Logic (SOL).

Functions	Settings	Time delay
Pick-up setting I_{Φ}>	DT: 0.10 to 20.00 In IDMT: 0.10 to 5.00 In	DT: 0.04 to 300.00 s
Delay curve family	IEC, IEEE, IEEE2, RI, programmable (prg.)	
Delay type	IEC: NI, VI, EI, LTI, Parameters	
	IEEE: VI, EI, LTI, LTEI, LTVI, MI, STI, STEI, Parameters	
	IEEE2: NI, VI, EI, MI, Parameters	
	RI: RI, RXIDG	
	Prg.: configurable using constant A, B, C, D, E in delay function	
Inv. time coefficient k	0.05 to 20.0 for IEC and RI	
	0.50 to 20.0 for RXIDG, IEEE and IEEE2	
Release delay	0.03 to 100 s	
Direction mode	Directional, Undirrectional, Directional + Backup	
Angle offset	-180° to +179°	
Inrush stabilization	Enable / Disable	
SOL (Sel. O/C Logic)	Enable / Disable	
SOL operat. Delay		DT: 0.04 to 300.00 s
SOL Inv. time coeff. k	0.05 to 20.0 for IEC and RI	
	0.50 to 20.0 for RXIDG, IEEE and IEEE2	
CLP (Cold Load pickup)	Enable / Disable	
CLP Pick-up setting I>	DT: 0.10 to 20.00 In	
	IDMT:0.10 to 5.00 In	
CLP operation delay		DT: 0.04 to 300.00 s
CLP Inv. time coeff. k	0.05 to 20.0 for IEC and RI	
	0.50 to 20.0 for RXIDG, IEEE and IEEE2	

Note: IDMT characteristic for stages I_{Φ}> and I_{Φ}>> only

Functions and description

Directional earth/ground fault overcurrent - ANSI 67N

This function provides selective and sensitive earth/ground fault protection for various network earthing systems.

- Residual current and voltage can be either measured or internally calculated
- 3 independent stages with DT operating time
- Settable directionality
- Directional voltage memory (3.2 s).

Functions	Settings	Time delay
I_0 input	I_0, I_{0Calc}, I_0'	
Pick-up setting Io>	DT: 0.002 to 20.00 I_{n0}	DT: 0.04 to 300.00 s
	IDMT: 0.10 to 5.00 I_n	
Delay curve family	IEC, IEEE, IEEE2, RI, programmable (prg.)	
Delay type	IEC: NI, VI, EI, LTI, Parameters	
	IEEE: VI, EI, LTI, LTEI, LTVI, MI, STI, STEI, Parameters	
	IEEE2:NI, VI, EI, MI, Parameters	
	RI: RI, RXIDG	
	Prg.: configurable using constant A, B, C, D, E in delay function	
Inv. time coefficient k	0.05 to 20.0 for IEC and RI	
	0.50 to 20.0 for RXIDG, IEEE and IEEE2	
Residual voltage U_0	1% to 50% U_{n0}	
Direction mode	ResCap, Sector, Undir	
Angle offset	-180 – +179°	

Note: IDMT characteristic for stages I_0> only

Transient intermittent earth/ground fault - ANSI 67NI

This function detects short transient intermittent phase to earth/ground faults in compensated networks, which cannot be correctly recognized by steady-state directional earth/ground fault functions using the fundamental frequency components only.

- Neutral displacement voltage U_0> element to enable function
- Settable forward/reverse direction
- Dedicated blocking input to coordinate with AR.

Functions	Settings	Time delay
I_0 input	I_0, I_0'	
Direction mode	Forward; Reverse	
Min. number of peaks	1 to 20	
U_0> setting	1% to 60% U_{n0}	
Operate time		0.02 to 300.00 s
Memory hold time		0.01 to 300.00 s
Reset delay		0.06 to 300.00 s

Functions and description

2nd harmonic (H2) detection - ANSI 68H2

This function detects inrush current flows that occur when transformers or machines are energized. It may be used to stabilize protection functions (e.g. phase overcurrent, earth/ground fault overcurrent, …) or even to issue a trip if the inrush condition persists too long.

- Based on proven I_2/I_1 measurement
- Measurement per phase.

Functions	Settings	Time delays
Pick-up setting $I_{f2}>$	10% to 100%	0.03 to 300.00 s

5th harmonic (H5) detection - ANSI 68H5

This function detects 5th harmonic current flows that occur during overexcitation of transformers. It may be used to stabilize protection functions or even to trip if the condition persists too long.

- Based on proven I_5/I_1 measurement.
- Measurement per phase.

Functions	Settings	Time delay
Pick-up setting $I_{f5}>$	10% to 100%	0.03 to 300.00 s

Auto-recloser function - ANSI 79

This function detects 5th harmonic current flows that occur during overexcitation of transformers. It may be used to stabilize protection functions or even to issue a trip if the condition persists too long.

- 5 shots.
- Control of 2 CBs.
- Control via binary or virtual inputs.

Function	Settings	Time delay
Enable Auto-Recloser	On; Off also via digital input (DI), virtual input (VI), virtual output (VO) or function key	
Breaker 1 object	Obj1 to Obj6	
Breaker 2 object	Obj1 to Obj6	
Auto CB selection	Disable; Enable	
Input for selecting CB_2	via DI, VI, VO or function key	
Reclaim time		0.02 to 3000.00 s
Block by external synchro. check	via DI, VI, VO or function key	
Shot specific reclaim time	On; Off	
AR info for mimic display	On; Off	
Settings per shot	Dead time	0.01 to 1200.00 s
	Discrimination time	0.02 to 300.00 s
Additional setting 1st shot	Start delay	0.02 to 300.00 s

Functions and description

Over frequency - ANSI 81O

Protection of motors against overheating caused by motor excessive start time due to heavy motor load or too low voltage.

- 2 independent stages with define time are provided.
- Under voltage self-blocking will operate when the maximum phase to phase voltage is less than the voltage setting.

Functions	Settings	Time delay
Pick-up setting	40 to 70 Hz	Trip: 0.1 to 300 s
Low voltage blocking	30% to 100% Un	

Rate of change of frequency - ANSI 81R

This function is applied to detect the rate of change of system frequency, for fast load shedding or fast disconnection of islanded generators under loss of main condition.

- 2 independent stages with define time are provided.
- Direction of the frequency change is settable.
- Under voltage self-blocking will operate when the maximum phase to phase voltage is less than the voltage setting.

Functions	Settings	Time delay
Direction of change	Negative, Positive, Either	
Pick-up setting	0.1 to 10 Hz/s	Trip: 0.05 to 10 s
Low voltage blocking	30% to 100% Un	

Under frequency - ANSI 81U

This function is applied to detect the abnormal lower system frequency, to trigger load shedding, or indicate the loss of main grid.

- 4 independent stages with define time are provided.
- Under voltage self-blocking will operate when the maximum phase to phase voltage is less than the voltage setting.

Functions	Settings	Time delay
Pick-up setting	40 to 64 Hz	Trip: 0.1 to 300 s
Low voltage blocking	30% to 100% Un	

Functions and description

Lockout - ANSI 86

This function is used to prevent switch onto fault and function is also called latching, can be programmed for outputs in the OUTPUT MATRIX setting view. Any protection stage start or trip, digital input, logic output, alarm and GOOSE signal connected to the following outputs can be latched when required.

- Lockout function independently to protection stages in output matrix.

Functions	Settings	Time delay
Pick-up setting	40 to 70 Hz	Trip: 0.1 to 300 s
Low voltage blocking	30% to 100% Un	

Programmable stages - ANSI 99

For special applications the user can built own detection stages by selecting the supervised signal and the comparison mode.

- 8 independent stages, all with DT, 2 alternatively with IDMT operating time
- Priority selection for fast operation needs
- Multiple coupling and comparing conditions.

Functions	Settings	Time delay
Pick-up setting		
Operation time	0.08 to 300	Instant overcurrent

Communication

Examples of architectures

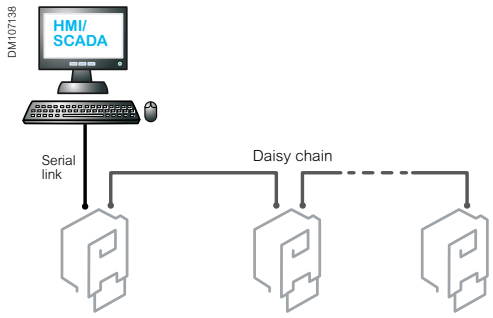

Connection to SCADA using serial line

This architecture allows you to connect HMI/SCADA to a set of Easergy protection relays using a multi-drop serial communication link with master-slave communication.

Available protocols:

- Modbus RTU
- IEC 60870-5-101
- IEC 60870-5-103
- DNP3

Time synchronisation protocol:

- IRIG-B
- Minute pulse

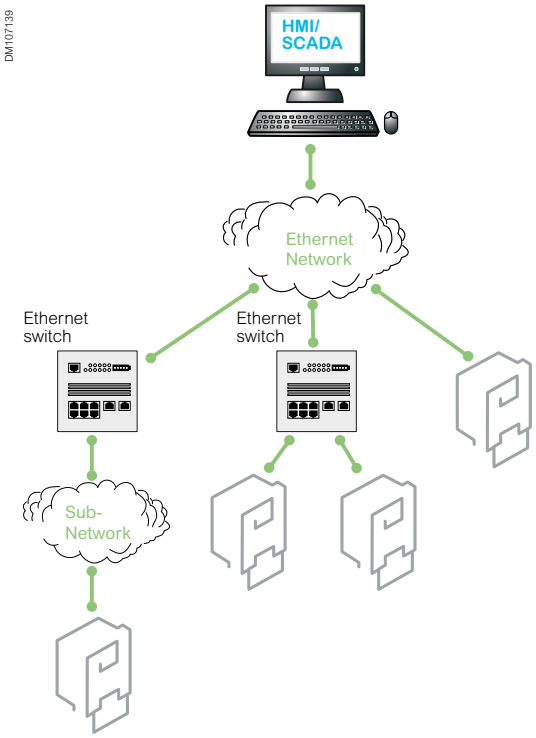

Connection to SCADA using Ethernet

This architecture allows you to connect a set of Easergy protection relays directly to an Ethernet network.

Available protocols:

- IEC 61850
- IEC 60870-5-101
- DNP3
- EtherNet/IP

Note: It is possible to mix on the same Ethernet network the IEC 61850 protocol with any of the 4 other protocols.

This allows you to use the GOOSE messages between relays together with another protocol for communication to SCADA.

It is also possible to connect an Easergy relay to 2 different control systems, using the same Ethernet communication port and IEC 61850 protocol for one of them and any available protocol for the other one.

The Easergy P5 relay handles the IEC 61850 station bus, in compliance with standards IEC 61850-6, 7-1, 7-2, 7-3, 7-4 and 8-1 Ed.1 or Ed.2, according to configuration.

Other available Ethernet protocols:

- FTP for file transfer
- SNTP for time synchronization
- HTTPS for web server

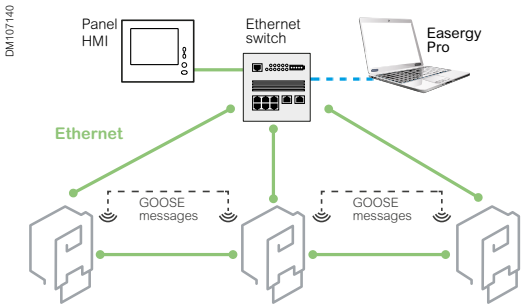

Switchboard internal network

This architecture allows fast GOOSE communication between Easergy protection relays of the switchboard, thus avoiding costly wiring. Typical uses are logic discrimination, load shedding, etc.
In addition, a panel HMI featuring a web browser can be used to monitor and control the entire switchboard.
A spare connection on the panel Ethernet switch can also be provided for connecting the Easergy Pro.
On Easergy P5x30 models, 2 independent Ethernet communication modules are available. This allows to implement the switchboard internal network and the communication to SCADA on two separate Ethernet networks.

Communication

Redundancy protocols

DM107141

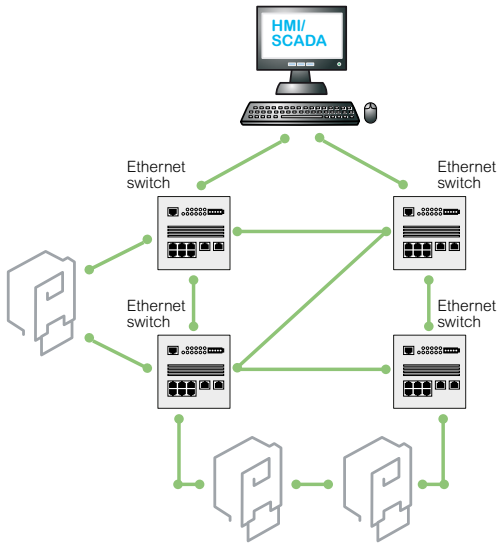

RSTP (Rapid Spanning Tree Protocol)

The principle of RSTP is to virtually cut all links that are not necessary at a given time, changing the meshed topology into a tree topology.

The main advantage of RSTP is that it is widespread and works on any network topology. On the other hand, RSTP takes milliseconds or seconds to reconfigure the network in case of network interruption.

With Easergy P5, the typical reconfiguration time for a loop of 10 relays is 0,050s.

DM107142

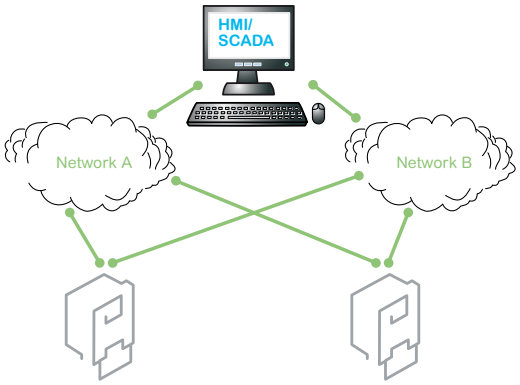

PRP (Parallel Redundancy Protocol)

The principle of PRP is to transmit frames in parallel on two independent network infrastructures: A and B.

The receiving device is in charge of removing the redundant frame if it is received.

PRP features a 0 ms recovery time in case of failure.

DM107143

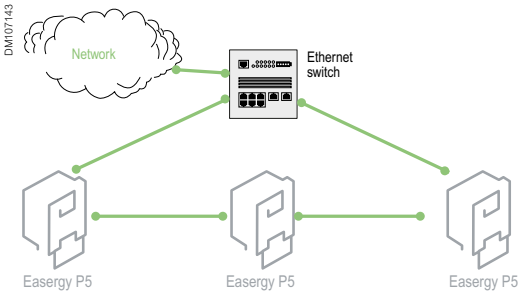

HSR (High-availability Seamless Redundancy)

HSR is similar to PRP but only works on a ring architecture.

Frames are transmitted on the ring in both directions and the receiving device eliminates redundant frames.

HSR provides a 0 ms recovery time and is an alternative to PRP when network topology can be restricted to a ring.

PRP & HSR are listed in IEC 62439-3 as part of IEC 61850 standard. They both provide standardized, interoperable and performing redundant Ethernet solutions.

Communication

Data exchanged

Data exchanged with SCADA

Ports	Ethernet			Serial or Ethernet		Serial	
Protocol	IEC 61850	Ethernet/IP	FTP	DNP3	Modbus	IEC 60870-5-103	IEC 60870-5-101
Real time data							
Measurement	●	●	-	●	●	●	●
Alarms and status	●	●	-	●	●	●	●
Controls	●	●	-	●	●	●	●
Time-stamped events	●	●	-	●	●	●	●
Historical data							
Disturbance records	-	-	●	-	-	●	-
Sequence of event record files	-	-	●	-	-	-	-
Setting management							
Setting group change	●	●	-	●	●	●	●
Settings	●	-	-	-	●	-	-

Data exchanged according to IEC 61850

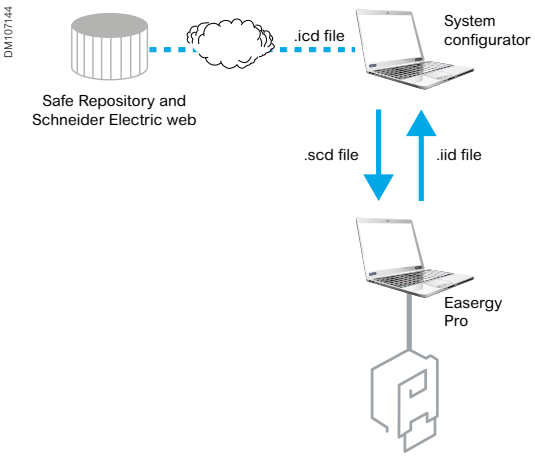

The Methodology described in the IEC 61850-6 standard can be applied with Easergy relays, in order to build a protection and control system based on this standard.

.icd file

For each model of Easergy relay, the IED capability file can be downloaded from the Schneider Electric website.

.scd file

The system description file generated by the system configurator can be processed by Easergy Pro and the relevant system settings integrated in the Easergy configuration.

.iid file

When the configuration of an Easergy relay is completed or modified, Easergy Pro can generate an Instantiated IED Description file to be used by the system configurator to update the system description.

Cyber security

Cyber security systems

Cyber security features implemented in Easergy P5 help to mitigate cyber threats.

Easergy P5 can be ordered, either with:

- Cyber security basics or
- Cyber security advanced.

DM107145

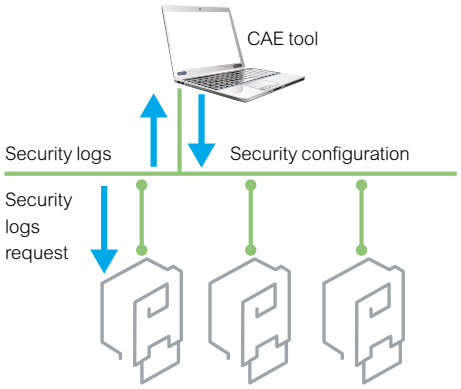

DM107146

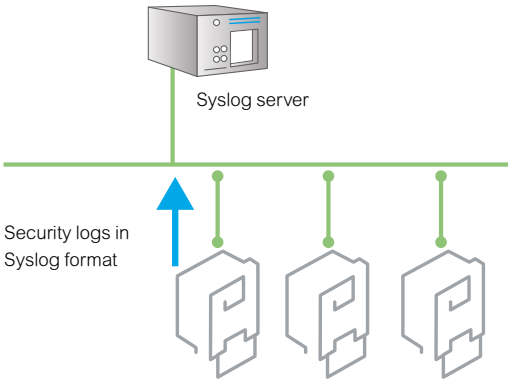

DM107147

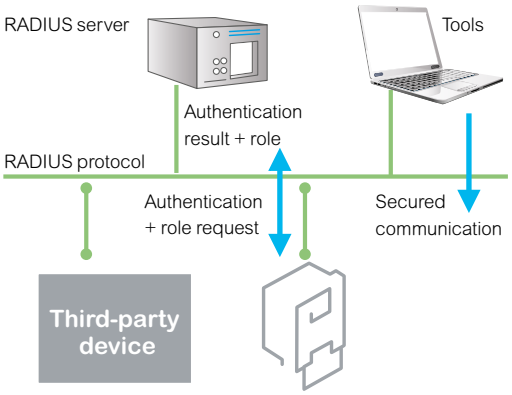

Common features of basic and advanced packages

- Secured communication between Easergy P5 and associated tools,
- Protection of the hardware and logical communication ports,
- Password based user's authentication,
- Role Based Access Control authorization management,
- Secured log storage
- Compliant to NERC CIP and BDEW requirements.

Extra features provided by advanced package

With advanced package, Easergy P5 take benefit of "EcoStruxure Cybersecurity Admin Expert" (CAE), a windows-based tool that allows a central management of Security configuration and access to security logs of each Easergy P5 connected to the substation network.

Security configuration P5 includes:

- Roles and permissions: Role Base Access Control (RBAC),
- Users with associated roles,
- Security policy, for example password complexity or password strategy,
- Rules for security logs, choose between various standard,

With Level1 option, Easergy P5 become part of a cyber security management system consisting of servers for security logs, authentication and authorization, using standard network protocols.

Easergy P5 can send security logs to any standard syslog server. Two use-cases are available for authentication and authorization features:

- local
- centralized.

Advanced - Local Authentication and Authorization

In this usecase, **local** authentication and authorization don't rely on any external servers. Security configuration is stored locally in each Easergy P5. Users authentication and authorization using associated role are performed locally (RBAC). CAE is used to update globally the security configuration of all the Easergy P5 located inside the substation, so that users, associated passwords, and other parameters are consistent on all devices.

Advanced - Centralized Authentication and Authorization

In this usecase, **centralized** authentication and authorization relies on one or two RADUIS server, with IEC62351-8 extension.

This allowed to use Unified Account management system shared across heterogenous solutions. The same credentials are used at front panel of each Easergy P5, at tools and also at third party devices.

Radius server is in charge of authenticating users and providing associated role. Then Easergy P5 allows access based on this role and the internal security configuration (RBAC).

Typically, the Radius server implemented with windows server component: NPS + Active Directory.

Schneider Electric can also provide an IEC62351-8 compliant Radius server already configured with authorization. This server allows a fast and reliable solution, managed by the CAE software. In addition, it's includes a syslog server.

Easergy P5
Product description

Easergy P5
Product description

Functional view	**38**
P5U20 - Universal application	42
P5V20 - Voltage application	43
P5F30 - Feeder application	44
P5M30 - Motor application	45
Base unit description	**46**
P5x20 - dimensions and weight	46
P5x30 - dimensions and weight	43
Hardware specification	48
Rear panel description	49
Front panel description	50
P5x20 - Front panel description	51
P5x30 - Front panel description	52
Connection diagrams	53
Technical characteristics	56

Functional view

P5U20 - Universal application

The Easergy P5U20 is used for feeder, motor, or distribution transformer protection.

The Easergy P5U20 offers a complete set of current-based protections and measurement, control facilities and recording/monitoring functions for efficient operation of the power system.

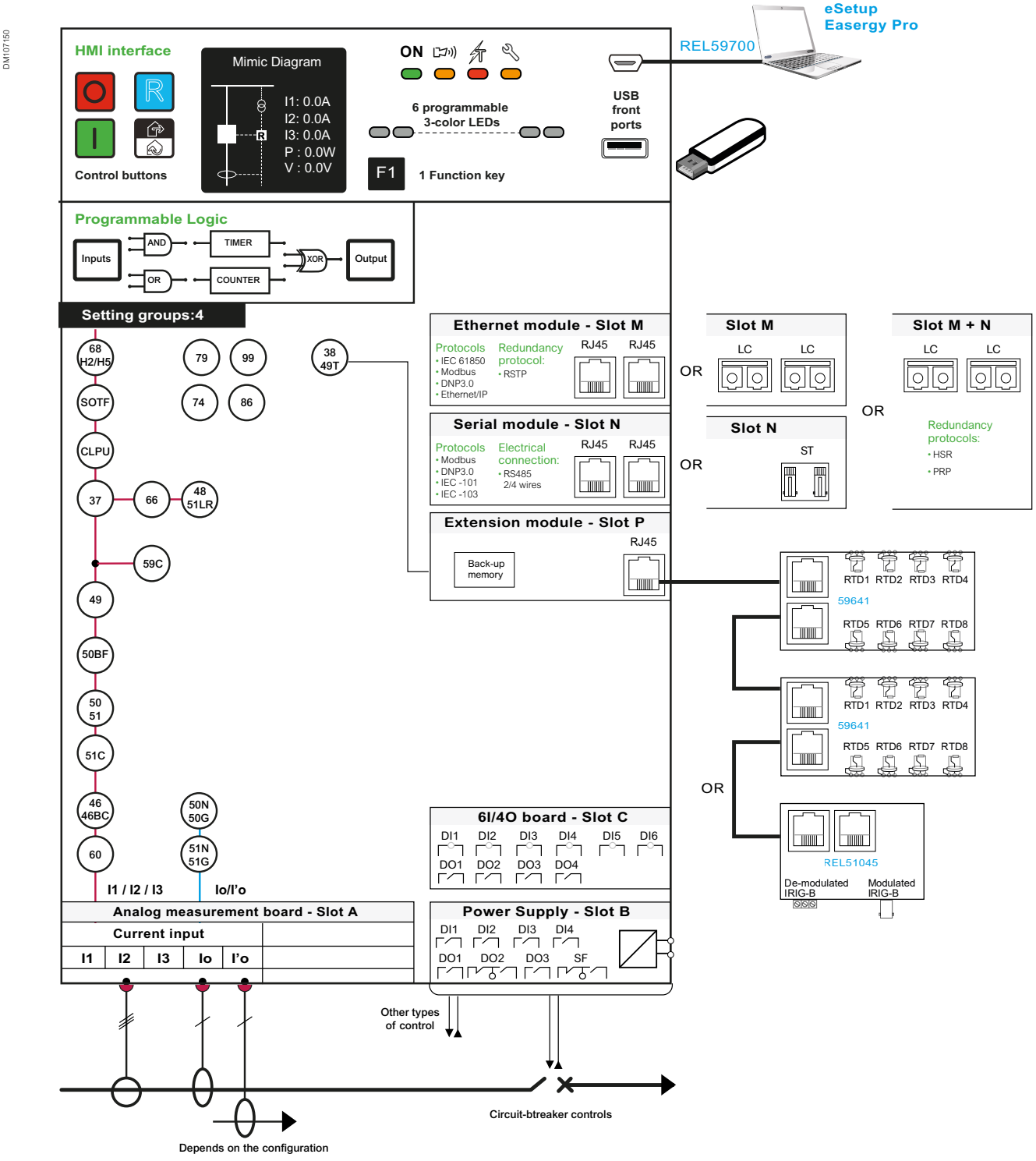

Functional view

P5V20 - Voltage application

The Easergy P5V20 offers a complete set of voltage and frequency protections, as well as measurements and recording/monitoring functions for efficient operation of the power system.

In addition it can be used for the control of switchgear.

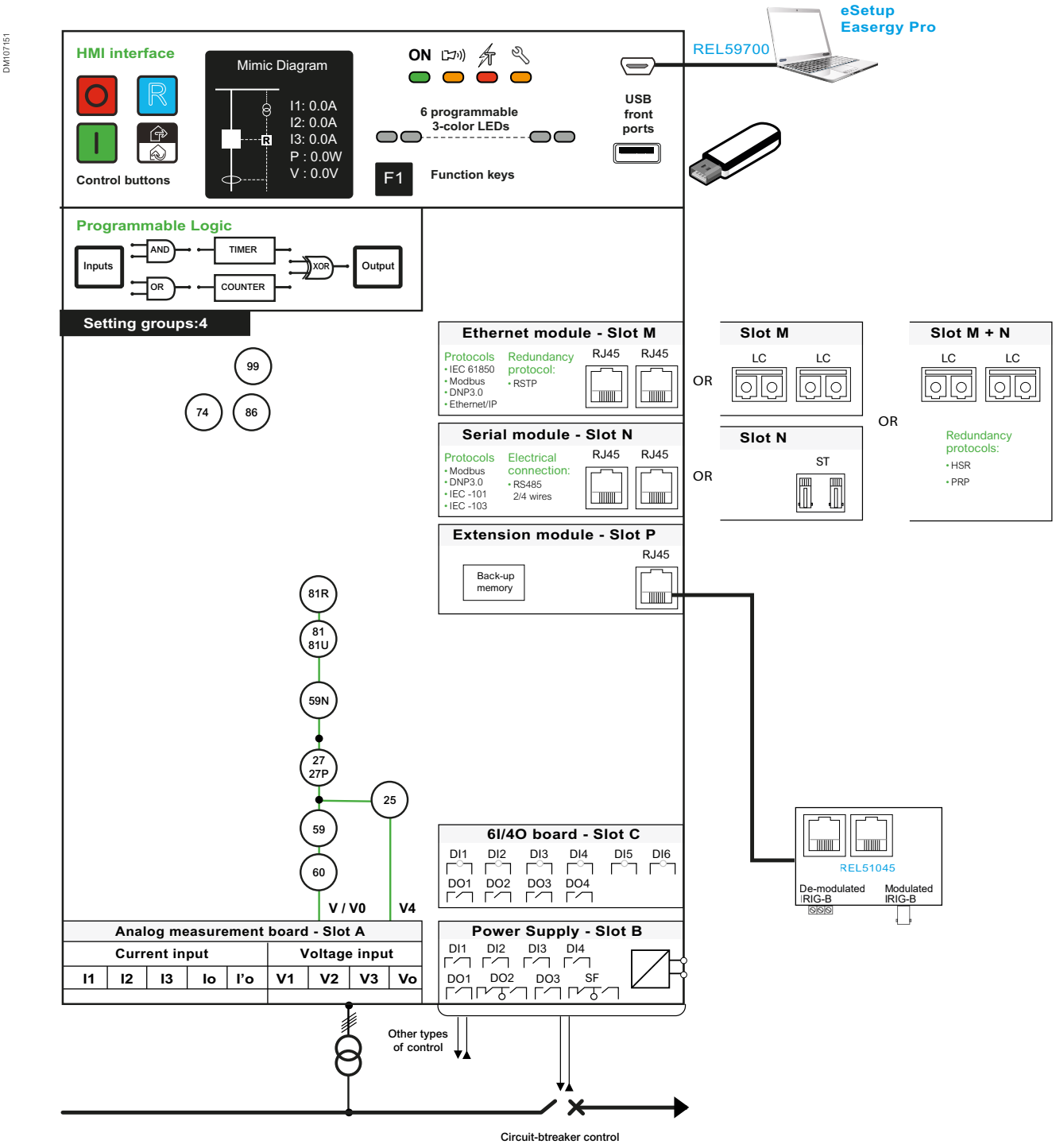

Functional view

P5F30 - Feeder application

The Easergy P5F30 is designed for the operation of electrical distribution networks of industrial installations and utility substations for all levels of voltages.

The Easergy P5F30 offers a complete set of current and voltage based protections and measurement, control facilities and recording/monitoring functions for efficient operation of the power system. It is suitable for application on solidly grounded, impedance grounded, Petersen coil grounded and isolated systems.

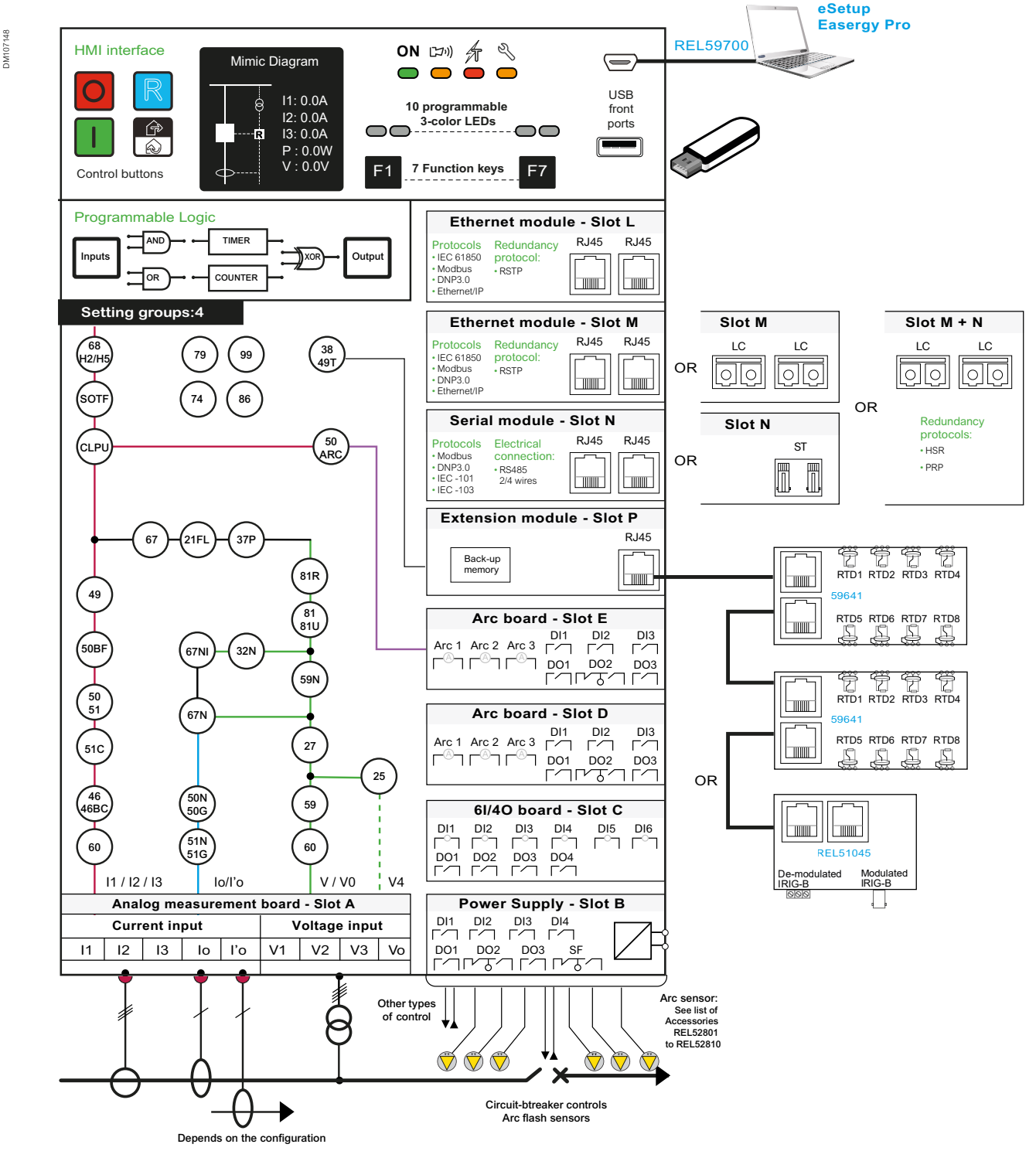

Functional view

P5M30 - Motor application

Compact, specially developed and designed for rotating machine, the Easergy P5M30 relays performs an essential role in many industrial processes and generations for medium and large sized rotating machines.

The Easergy P5M30 is more than a conventional protection relay. It offers numerous additional functions suitable and crucial for a wide range of applications, which involve protection, monitoring, diagnosis, fault analysis tools, and maintenance aids.

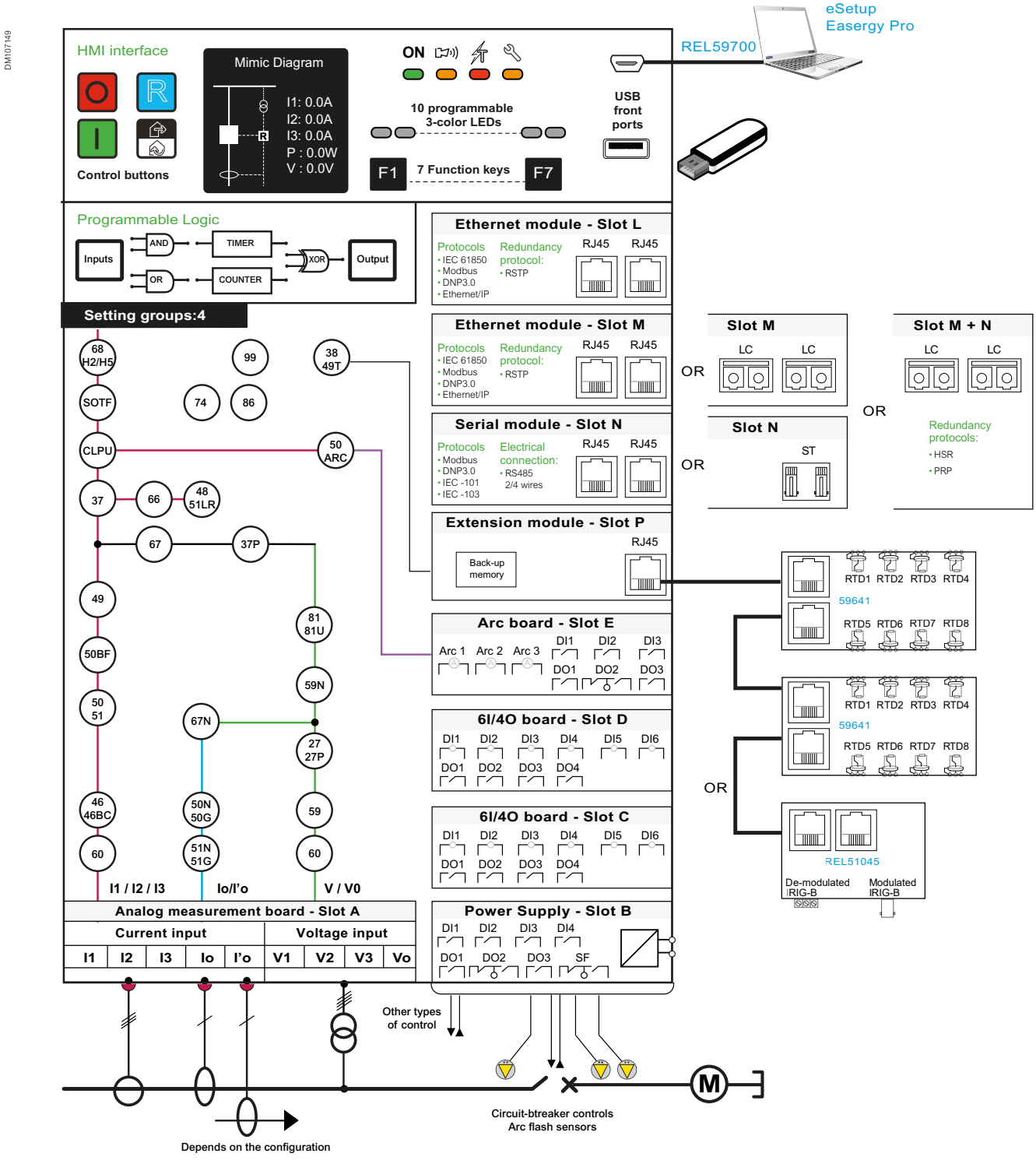

Base unit description

P5x20 - Dimensions and weight

4U - 20TE standard box

Dimensions	mm	in.
Height	180	7.08
Width	102	4.01
Depth	224	8.82
Weight	**kg**	**lbs**
Weight	2.5 to 3.5	5.5 to 7.7

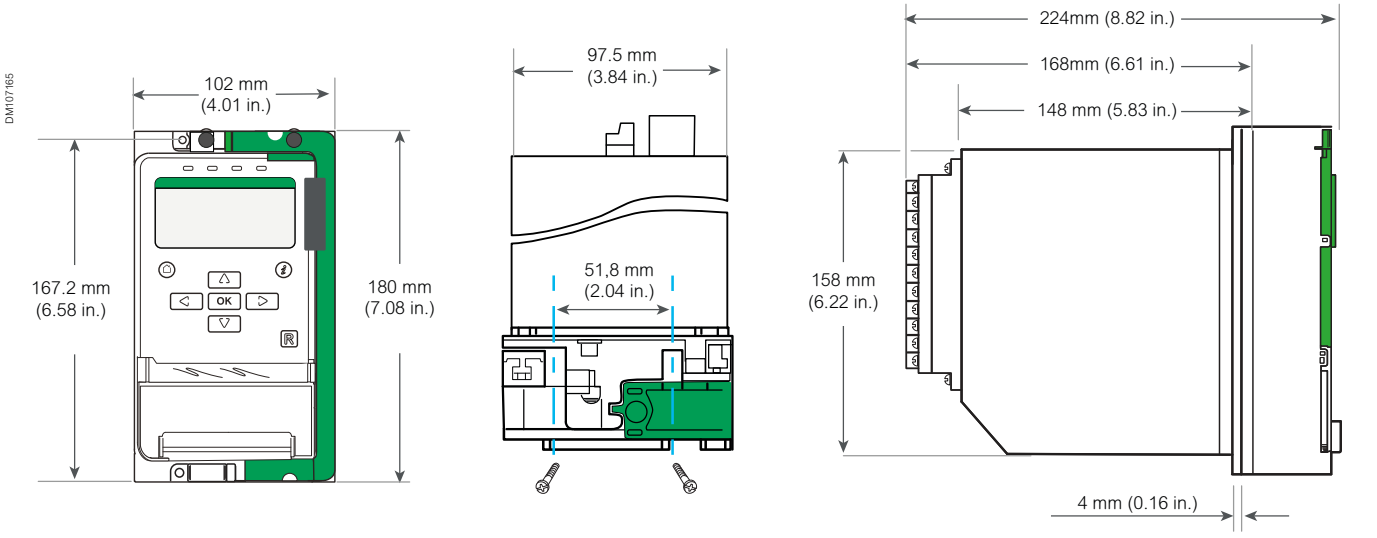

Flush mounting installation

Cut-out dimensions	mm	in.
Height	205	8.07
Width	130	5.12

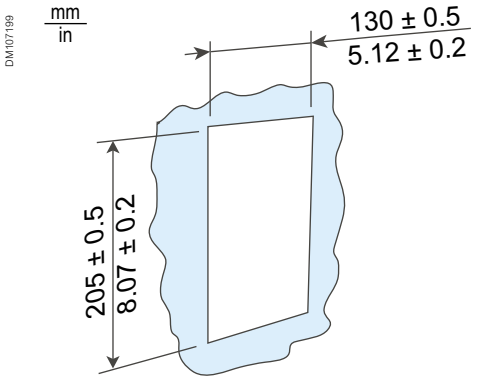

More info on installation accesories page 77

Base unit description

P5x30 - Dimensions and weight

4U - 30TE standard box

Dimensions	mm	in.
Height	180	7.08
Width	152.4	6
Depth	224	8.82
Weight	**kg**	**lbs**
Weight	2.5 to 3.5	5.5 to 7.7

DM107168

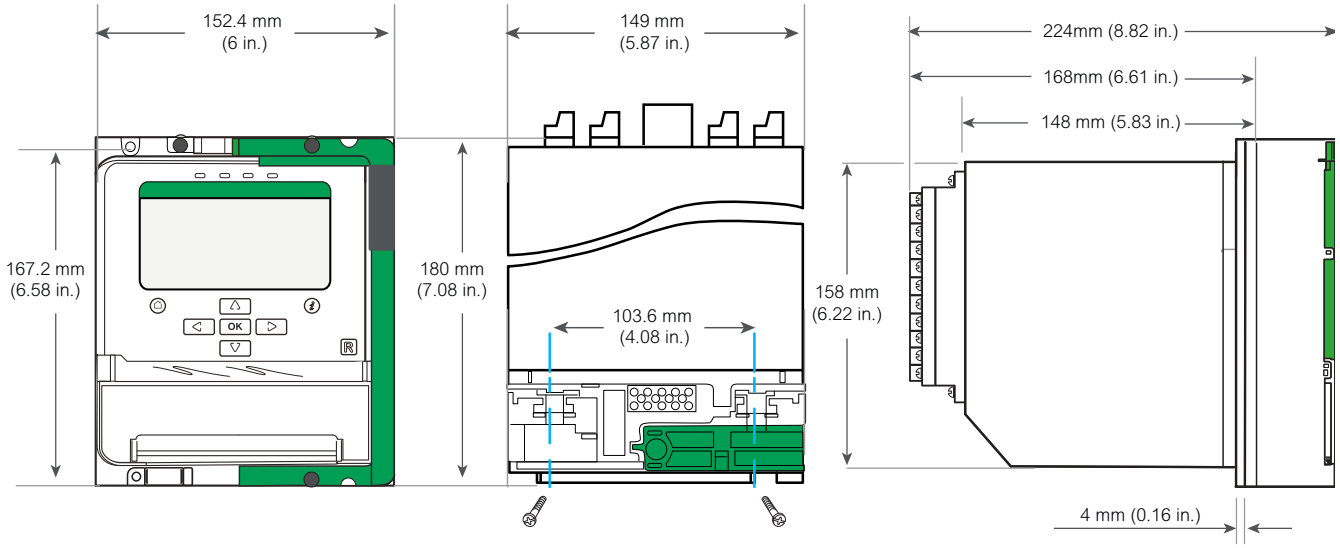

Flush mounting installation

Cut-out dimensions	mm	in.
Height	205	8.07
Width	180	7.09

DM107199

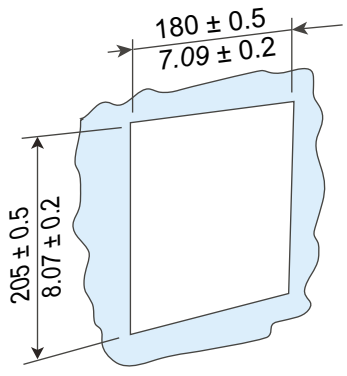

More info on installation accesories page 77

Base unit description

Hardware specification

PM107312

Optional modules

Option in slots A, B, C, D, E must be selected when ordering the device (measuring inputs, power supply and input/output optional boards).

Communication modules in slots L, M, N, P can be ordered separately and added on site, when more communication capabilities are required.

External modules are available for RTD inputs and for IRIG-B time synchronization.

PM107326

Draw-out design

Easergy P5 protection relays can be drawn-out, offering faster and easier maintenance with less risk:

1. Its removable parts (including the I/O board, CPU board and power supply) can be easily replaced.
2. Thanks to the backup memory included in the extension module (option), configuration and log records are automatically reloaded, allowing quick relay restart without additional configuration. No recommissioning is necessary.
3. The CT and VT inputs are isolated when the device is withdrawn.

Base unit description

Rear panel description

Rear communication modules:

ETH Dual port copper (RJ45) or optical fibre (multimode glass fiber) Ethernet module

SRL RS485 or optical fibre serial communication module

EXT ⚠ Extension port for connection with external modules

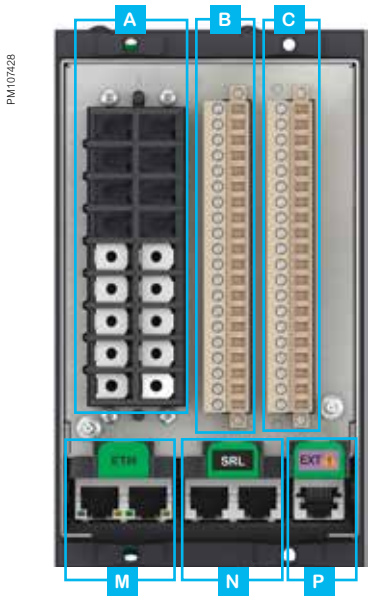

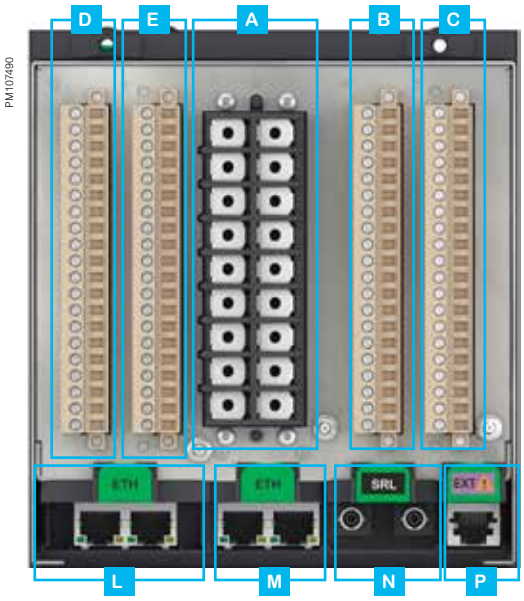

		Easergy P5x20	Easergy P5x30
Slot A	CT/VT inputs	3 phase CT + 2 residual CT or: 3 phase CT + 1 residual CSH or: 4 VT	3 phase CT + 2 residual CT + 4 VT or: 3 phase CT + 1 residual CSH + 4 VT or: 3 phase LPCT + 1 residual CSH +4 LPVT (*)
Slot B	Power supply and digital I/O	24 to 250 V supply + 4 DI + 3 DO + WD	48 to 250 V supply + 4 DI + 3 DO + WD
Slot C (option)	Additional I/O	6 DI + 4 DO	6 DI + 4 DO
Slot D (option)	Additional I/O		6 DI + 4 DO or: 3 Arc + 3 DI + 3 DO
Slot E (option)	Additional I/O		6 DI + 4 DO or: 3 Arc + 3 DI + 3 DO
Slot P (option)	Extension port	Extension module	Extension module
Slot N (option)	Serial port	RS485 serial line module or: Fiber optic serial line module	RS485 serial line module or: Fiber optic serial line module
Slot M (option)	Ethernet port	Ethernet TP module with RSTP or: Ethernet FO module with RSTP	Ethernet TP module with RSTP or: Ethernet FO module with RSTP
Slots M&N (option):	Ethernet port with HSR/PRP	Ethernet FO module with HSR/PRP	Ethernet FO module with HSR/PRP
Slot L (option)	Ethernet port		Second Ethernet TP module with RSTP

(*) Contact us for availability

Base unit description

Front panel description

DM107197

Home page of easy navigation

DM107196

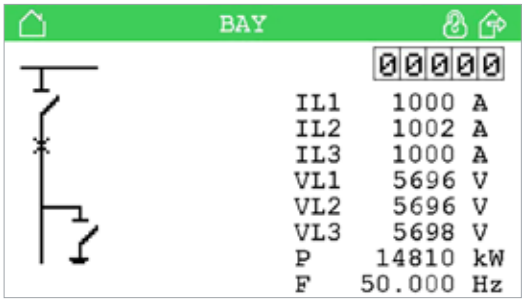

Single-line diagram for easy operation

Comprehensive data for fast and easy operation

All the data required for a local equipment operation may be displayed on demand:

- Display the single-line diagram and freely assignable analog values
- Display of all measurements
- Display of operation and alarm messages
- Display and setting of all parameters
- Entry of password to protect parameter and protection settings

Ergonomic data presentation

- 480 x 272 colour LCD screen (P5x30 models) or 192 x 96 LCD screen (P5x20 models) to display any character or symbol
- Dedicated keys for operation:
  - Control buttons (O/I) to operate the circuit breaker and other controllable objects
  - Reset button (R) to clear the alarms and reset the lockout function
  - Local / Remote button
- Programmable function keys (7 on P5x30 models, 1 on P5x20 models)
- Dedicated LEDs for signalling:
  - Power on
  - Relay maintenance
  - Trip
  - Alarm
- Tri-color programmable LEDs (10 on P5x30 models, 6 on P5x20 models)

Working languages

All the texts and messages displayed on the Easergy P5 protection relay are available in two languages: English plus a local language. Files of different languages can be downloaded from the Schneider Electric website.

Base unit description

P5x20 - Front panel description

KEYS		
		HOME key: return to the previous menu. To return to the first menu item in the main menu, press the button for at least three seconds
		INFO push-button for viewing additional information, entering the password view, and adjusting the LCD contrast
		Reset control key
Navigation keys	OK	ENTER key: activate or confirm a function
		UP key: move up in the menu or increase a numerical value
		DOWN key: move down in the menu or decrease a numerical value
		LEFT key: move backwards in a parallel menu or select a digit in a numerical value
		RIGHT key: move forwards in a parallel menu or select a digit in a numerical value
		Switchgear control key (OPEN)
		Switchgear control key (CLOSE)
		Local/remote control key
	F1	Customizable function key

LEDS

- On (Green)
- Alarm (Yellow)
- Trip (Red)
- Maintenance (Yellow)
- 6 customizable tri-color LEDs

PORTS

- USB mini B (Computer)
- USB A (USB key)

SEAL (open)

LABELS

- Customizable LED labels
- Customizable Bay label

SEAL (closed)

Base unit description

P5x30 - Front panel description

KEYS	
	HOME key: return to the previous menu. To return to the first menu item in the main menu, press the button for at least three seconds
	INFO push-button for viewing additional information, entering the password view, and adjusting the LCD contrast
	Reset control key
Navigation keys	
OK	ENTER key: activate or confirm a function
	UP key: move up in the menu or increase a numerical value
	DOWN key: move down in the menu or decrease a numerical value
	LEFT key: move backwards in a parallel menu or select a digit in a numerical value
	RIGHT key: move forwards in a parallel menu or select a digit in a numerical value
	Switchgear control key (OPEN)
	Switchgear control key (CLOSE)
	Local/remote control key
F1	Customizable function keys

LEDS

- On (Green)
- Alarm (Yellow)
- Trip (Red)
- Maintenance (Yellow)
- 10 customizable tri-color LEDs

PORTS

- USB mini B (Computer)
- USB A (USB key)

SEAL (open)

LABELS

- Customizable LED labels
- Customizable Bay label

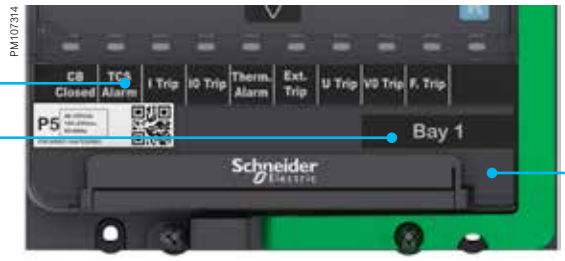

SEAL (closed)

Base unit description

Connection diagrams

CT and LPCT connection – slot A

Version with 3 phase CT + 2 residual CT inputs

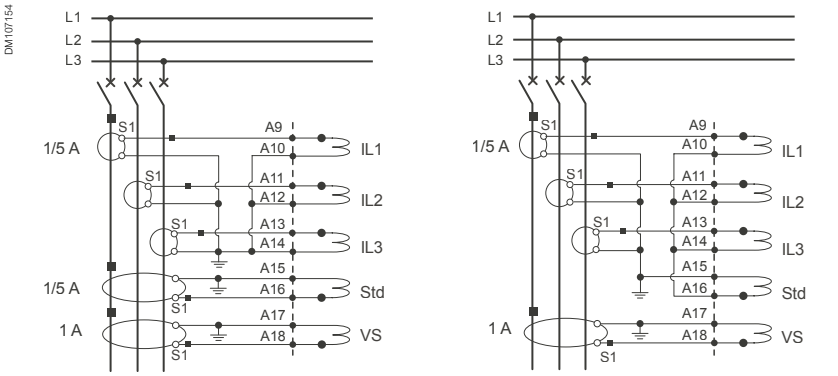

Version with 3 phase CT + 1 CSH inputs

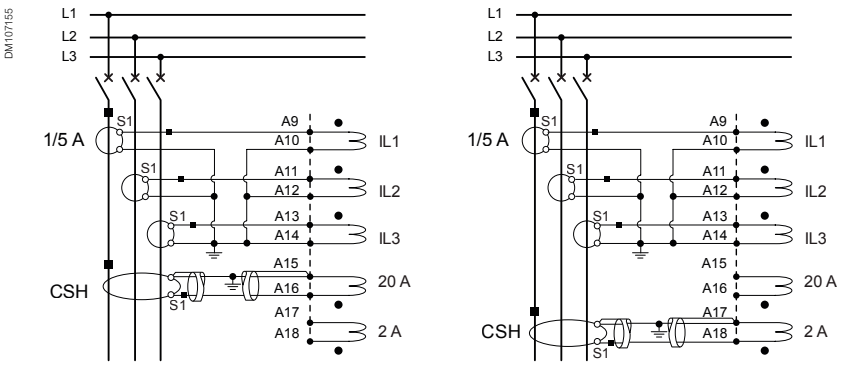

Version with 3 phase LPCT + 1 CSH inputs (*)

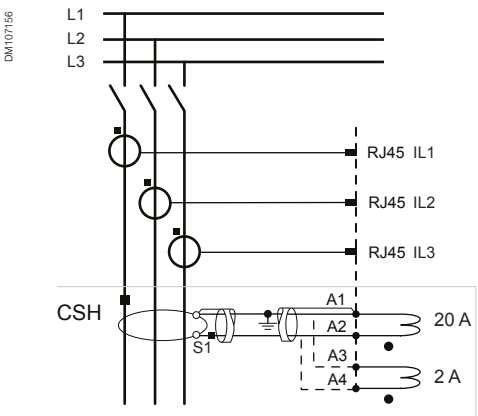

(*) Contact us for availability

Base unit description

Connection diagrams

VT and LPVT connection – slot A

Version with 4 VT inputs

3 phase-to-neutral voltages and 1 residual voltage

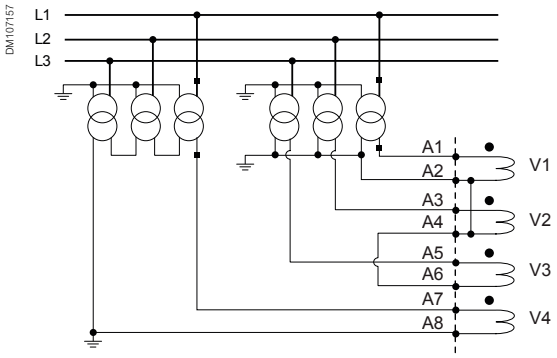

2 phase-to-phase voltages + 1 residual voltage + 1 additional phase-to-phase voltage

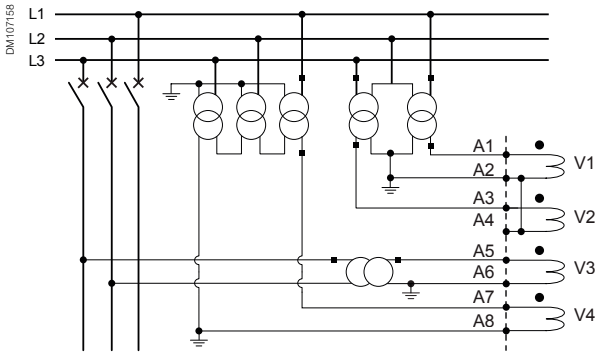

3 phase-to-neutral voltages + 1 additional phase-to-phase voltage

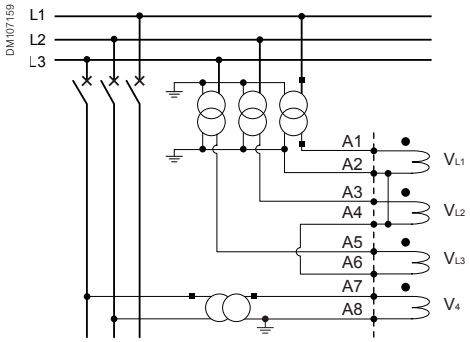

Version with 4 LPVT inputs (*)

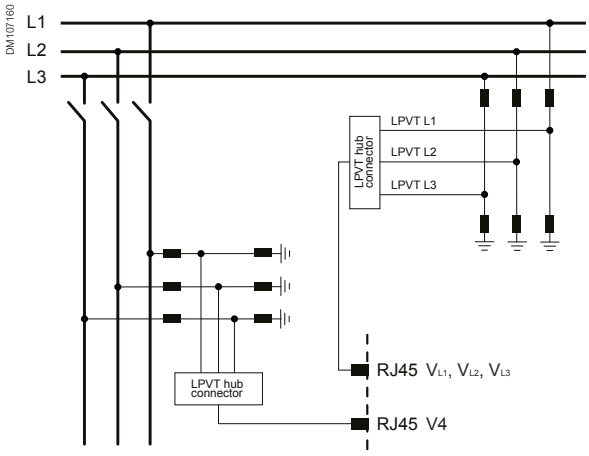

V4 = VB-VA
or V4=VA
according to setting

(*) Contact us for availability

Base unit description

Connection diagrams

Power supply and digital I/Os – slot B

P5U20 – P5V20	P5F30 – P5M30
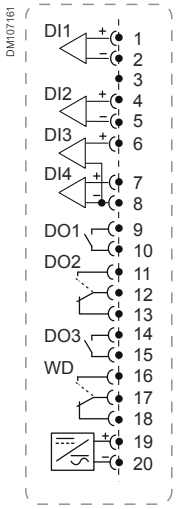	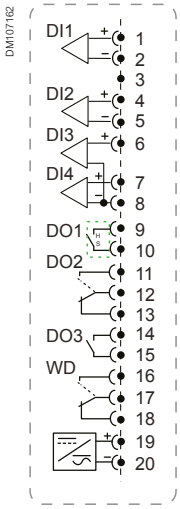
24 to 250 V supply + 4 DI + 3 DO + WD	48 to 250 V supply + 4 DI + 3 DO + WD
DI1 to DI4: universal digital inputs	DI1 to DI4: universal digital inputs
DO1, DO2 and DO3: control relay outputs	DO1: high-speed/high-break output DO2 and DO3: control relay outputs
WD: signaling relay output - watchdog	WD: signaling relay output - watchdog

Additional digital I/Os and arc-sensors inputs – slots C, D, E

P5U20 – P5V20 – P5F30 – P5M30	P5F30 – P5M30
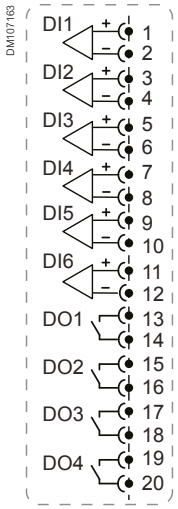	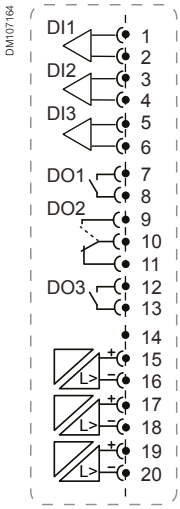
6 DI + 4 DO	3 Arc + 3 DI + 3 DO
DI1 to DI6: universal digital inputs	DI1 to DI3: universal digital inputs
DO1 to DO4: signaling relay outputs	DO1 and DO2: control relay outputs DO3: signaling relay outputs
	3 point light sensor inputs

Base unit description

Technical characteristics

Electrical characteristics

Power supply		
Rated voltage	P5x20	24-250 Vdc; 100-230 Vac
	P5x30	48-250 Vdc; 100-230 Vac
Variation		-20% / +20%
Typical burden (1)	P5x20	4.4 W
	P5x30	5.2 W
Maximum burden	P5x20	5.5 W 8 W
	P5x30	To be completed > 10.5 W
Maximum interruption time		100 ms
Energizing inputs		
Rated frequency		50/60 Hz

Phase CT and standard earth/ground fault CT inputs

Rated current	1 A / 5 A
Input impedance	< 0.02 Ohm
Thermal withstand, continuous	20 A
Thermal withstand, 1 s	500 A

Very sensitive earth/ground fault CT input

Rated current	1A
Input impedance	< 0.02 ohm
Thermal withstand, continuous	4 A
Thermal withstand, 1 s	100 A

CSH input (for 470/1 dedicated sensors)

Rated current	2 A / 20 A (primary value)
Input impedance	< 0.02 ohm
Thermal withstand, continuous	300 A (primary value)
Thermal withstand, 1 s	20 kA (primary value)

LPCT inputs (*)

Rated voltage	22.5 mV
Extended rated voltage	0.25 to 31.5 rated voltage
Input impedance	2 MOhms / 500 pF
Thermal withstand	60 V

VT inputs

Rated voltage	200 V
Input impedance	> 100 kohms
Voltage withstand, continuous	1.2 rated voltage

LPVT inputs (*)

Rated voltage	3.25 V/√3
Extended rated voltage	0.25 to 1.5 rated voltage
Input impedance	10 MOhms / 15 pF
Thermal withstand	25 V

Digital inputs	
Rated voltage	240 V DC or AC
Switching threshold voltage	10 to 200 V, settable
Current drain	1 to 28 mA, settable (1)

(1) According to configuration
(*) Contact us for availability

Base unit description

Technical characteristics

Relay outputs

Control relay outputs

Rated voltage	240 V DC or AC
Continuous current	8 A
Making current	30 A, 200 ms
Breaking capacity (L/R<40ms)	50W (24 to 127V) / 30W (240V) (2)

Signaling relay output

Rated voltage	240V DC or AC
Continuous current	2A
Breaking capacity (L/R<20ms)	2A (24V) / 1A (48V) / 0.2A (127V) / 0.1A (240V)

High-speed and high-break output

Rated voltage	240 V DC or AC
Continuous current	10 A
Making current	30 A, 200 ms
Breaking capacity (L/R < 40 ms)	10 A (24 to 240 V)
Closing / opening time	1 ms / 200 ms

(1) With a limitation according to the rated voltage of the circuit
(2) 50W @ 24V with additional customer protection (RC or zener diode)

Base unit description

Technical characteristics

Environmental characteristics

Electromagnetic compatibility	Standard	Level / Class	Value
Emission Tests			
Conducted emission	CISPR 11	Class A	0.15 to 0.5 MHz: 79 dBµV (quasi peak)
	CISPR 22	Class A	0.5 to 30 MHz: 73 dBµV (quasi peak)
	IACS E10		0.15 MHz to 0.3 MHz: 80 to 50 dBµV/m
Radiated emission	CISPR 22	Class A	30 MHz to 230 MHz: 40 dBµV (quasi peak)
			0.3 MHz to 100 MHz: 60 to 54 dBµV/m
	IACS E10		100 MHz - 2000 MHz, 54 dBµV/m except for: 156 MHz - 165 MHz, 24 dBµV/m
Immunity tests – radiated disturbances			
Electrostatic discharge	IEC 61000-4-2		
	ANSI C37.90.3	Class 4	15 kV air / 8kV contact
Radiated electromagnetic energy	IEC 61000-4-3	Level 3	10 V/m, 80 MHz to 2.7 GHz, 80% AM (1 KHz)
	ANSI C37.90.2		20 V/m, 80 MHz to 1 GHz, 80% AM (1 KHz)
	GOST 32137		10 V/m, 80 MHz to 1 GHz, 80% AM (1 KHz) and pulse 200 Hz
	GOST 30804.4.3		30 V/m, 800 to 960 MHz & 1.4 to 2 GHz
	IACS E10		10 V/m, 80 MHz to 1 GHz
Magnetic fields at power frequency	IEC 61000-4-8	Level 5	100 A/m continuous, 1000 A/m, 3s
Pulse magnetic fields	IEC 61000-4-9	Level 5	1000 A/m
Oscillatory magnetic fields	IEC 61000-4-10	Level 5	100 A/m, 100 kHz and 1 MHz, 2s
Immunity tests – conducted disturbances			
Radio frequency disturbances	IEC 61000-4-6	Level 3	10 V CM, 0.15 MHz to 80 MHz
Slow damped oscillatory waves	IEC 61000-4-18	Level 3	2.5 kV CM, 1 kV DM, 100 kHz & 1 MHz
	ANSI C37.90.1		2.5 kV, 1 MHz, CM and TM
	IEC 61000-4-12 GOST30804.4.12		2 kV CM, 1 kV DM, 100 kHz Source impedance: 12 Ω
Fast damped oscillatory waves	IEC 61000-4-18	Level 3	2 kV CM, 3MHz, 10MHz, 30MHz
Conducted disturbances 0 to 150 kHz	IEC 61000-4-16	Level 4	300 V CM, 150 V DM, 0 to 150 kHz 30 V, continuous at power frequency
Electrical fast transient or burst	IEC 61000-4-4	Level 4	4 kV CM, 5 kHz and 100 kHz
	ANSI C37.90.1		4 kV, 5 kHz CM and TM
	IACS E10		2 kV power supply, 1 kV digital I/Os, 5min
Surge	IEC 61000-4-5	Level 4	4 kV CM, 2 kV DM / communication ports: 2 kV CM, 1 kV DM

Base unit description

Technical characteristics

Electromagnetic compatibility	Standard	Level / Class	Value
Disturbances on the power supply			
Voltage dips	IEC 61000-4-11		0%, 5/6 cycles min
			40%, 10/12 cycles
			70%, 25/30 cycles
	IEC 61000-4-29		0%, 100 ms min
			40%, 200 ms
			70%, 500 ms
Interruption	IEC 61000-4-11		0%, 250/300 cycles
	IEC 61000-4-29		0%, 5 s
Voltage variations	IEC 61000-4-14	Class 3	±12 % Un
Frequency variations	IEC 61000-4-28	Level 4	±15 % of frequency variation
Ripples	IEC 61000-4-17		15%, 100 Hz to 120 Hz
Gradual shutdown	IEC 61000-4-27		
Reverse of DC power supply	IEC 61000-4-27		

AM : Amplitude Modulation / CM : Common Mode / DM : Differential Mode / TM : Transversal Mode

Mechanical robustness	Standard	Level / Class	Value
In operation			
Vibrations	IEC 60255-21-1	Class 2	1 Gn, 10 Hz to 200 Hz
	GOST 17516.1		0,015 mm peak, 0,5 Hz to 57,6 Hz 1 Gn 57,6 Hz to 150 Hz
	IACS E10		13.2 Hz to 100 Hz – acceleration ± 0.7 g
Shocks	IEC 60255-21-2	Class 2	10 Gn / 11 ms
Earthquakes	IEC 60255-21-3	Class 2	2 Gn horizontal / 1 Gn vertical
De-energized			
Vibrations	IEC 60255-21-1	Class 2	2 Gn ; 10 Hz - 150 Hz
Shocks	IEC 60255-21-2	Class 2	30 Gn / 11 ms
Jolts	IEC 60255-21-2	Class 2	20 Gn / 16 ms

Base unit description

Technical characteristics

Climatic withstand	Standard	Level / Class	Value
In operation - Operating condition: -40°C to +70°C (-40°F to +158°F)			
Operating conditions			-40°C to +70°C (-40°F to +158°F)
Exposure to cold	IEC 60068-2-1	Ad	-40°C (-40°F) ; 96 h
Exposure to dry heat	IEC 60068-2-2	Bd	+70°C (+158°F), 96 h +85°C (+185°F), 16 h
Exposure to damp heat	IEC 60068-2-78	Cab	93% RH without condensation, 40°C (104°F), 56 days
	IEC 60068-2-30	Db	93-95% RH, 25°C to 55°C (77°F to 131°F), 6 cycles (12 + 12 hours)
Temperature variation	IEC 60068-2-14	Nc	-40°C to +70°C (-40°F to +158°F) 10°C/mn (18°F/mn)
In storage			
Storage conditions			-40°C to +85°C (-40°F to +185°F)
Exposure to cold	IEC 60068-2-1	Ab	-40°C (-40°F) ; 96 h
Exposure to dry heat	IEC 60068-2-2	Bb	+85°C (+185°F) ; 96 h
Exposure to damp heat	IEC 60068-2-78	Cab	93% RH to 95% RH, 40°C (104°F), 56 days
Corrosive atmosphere			
Salt mist	IEC 60068-2-52	Kb / 1	
2 and 4 gas	IEC 60068-2-60	Ke	• Method 1; 0,5 ppm H_2S; 1 ppm SO_2 • Method 4; – 0,071 ppm H2S, 0,26 ppm NO_2, – 0,034 ppm CL_2, 0,11 ppm SO_2
	IEC 60721-3-3	3C2	21 days

Climatic withstand	Standard	Value
General safety		IEC 60255-27
Creepage distances and clearances	IEC 60255-27	Pollution degree 2 overvoltage category III
High voltage withstand	IEC 60255-27	2 kV rms, 1mn 1 kV rms, 1mn across opened contacts
	ANSI C37.90	1.5 kV rms 1 mn across opened contacts of control relays
Impulse voltage withstand	IEC 60255-27	5 kV, 1.2 µs/50 µs
Insulation	IEC 60255-27	Insulation resistance > 100 MΩ at 500 Vdc

Marking and homologations

	Standard	Value
CE	IEC60255-26 IEC60255-27	CE marking according to: EMC Directive 2014/30/EU LV Directive 2014/35/EU
c UL us	UL508 ANSI/IEEE C37.90 CAN/CSA C22.2 No.14	File E354250, NRGU

Notes

Digital experience

Digital experience

Set up software	**64**
eSetup Easergy Pro	64
eSetup Easergy Pro - during engineering	65
eSetup Easergy Pro - during commissioning	65
eSetup Easergy Pro - during operation	65
Web-HMI	**66**
Mobile application	**67**

Set up software

eSetup Easergy Pro

Minimum requirements for running eSetup Easergy Pro:

- Windows 7 or higher
- 512 MB RAM
- 50 MB Disk space

At each step of the digital life

eSetup Easergy Pro offers full facilities to set up Easergy relays. Intuitive and simple, eSetup Easergy Pro is a user-oriented interface to assist you during the engineering, commissioning and operation of Easergy protection relays.

ts streamlined workflow and graphical representations has been designed to smooth your configuration process.

The software is available for download on the Schneider Electric website.

Use eSetup Easergy Pro in standalone mode during engineering to prepare the configuration.

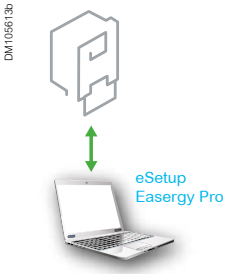

Connect the PC running eSetup Easergy Pro to the USB port of the Easergy protection relay during commissioning to adjust the settings and test the relay.

For connection to Easergy P5, use the REL52822 connection cord

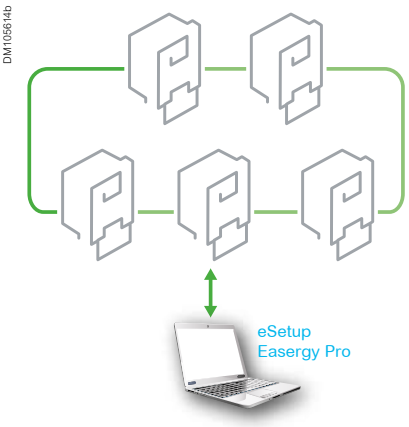

Connect the PC running eSetup Easergy Pro to the Ethernet network during operation to retrieve data from the relays and update the system.

Set up software

eSetup Easergy Pro

EM106160

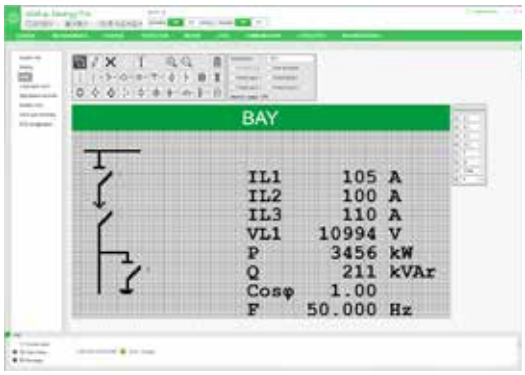

During engineering

- Create the configuration of the Easergy P5 relay: select the appropriate options and receive the order code
- Set the characteristics of the CTs, VTs, or sensors connected to the relay, and select the protection functions that will be activated and their settings
- Build a specific logic, if required, using a graphic editor
- Map the digital inputs of the relay and different internal signals to the relevant functions, LEDs, and digital outputs, using a straightforward matrix format.
- Draw the single-line diagram that will appear on the front display of the relay for switchgear control and select the measurements that will be displayed. If any, build the interlocking logic using a matrix format
- For IEC 61850 protocol, configure the data set and the report control blocks that will be published and select the GOOSE data to which you want to subscribe
- Complete the setting of additional functions (disturbance recorder, event logging system, clock synchronization, etc.).

EM106163

During commissioning

- Connect to the front panel of one single relay or access several relays by connecting to Ethernet
- Open the Digital Inputs menu to check the status of inputs. Reverse the polarity or add a filtering delay if necessary
- Open the Relays menu and force the status change of the output relays in order to check the wiring.
- Open the Phasor Diagram menu to see in real time the phasor of injected currents and voltages and the value
- Use virtual injection for testing protection settings and circuit breaker tripping and for checking LEDs and connected outputs
- Open the Logic or the Matrix menu if the logic needs to be tested. The active signals appear in a different color and are updated in real time. Changes in the logic or in the matrix can be made and applied to the relay smoothly.

EM106166

During operation

- Connect to the front panel of a single relay or gain access to several relays by connecting to Ethernet
- During normal operation, get the most of the metering capabilities of the Easergy protection relay:
  - Open the different Measurements menus to access the power monitoring and power quality data.
  - Open the disturbance recorder menu to get a waveform capture or program the recording of a power trend.
- After a trip, use eSetup Easergy Pro to understand the fault:
  - Check the fault log of the protection that has tripped the circuit breaker
  - Download the disturbance record from the Easergy P5 and display it with a disturbance recorder evaluation tool, eg. Wavewin.

Web-HMI

Description

Enhance operational efficiency

- **Direct access to protection and communication settings**
- **Control and monitoring of circuit breakers and switches**
- **Mirror HMI function**
- **Direct access to measurements including the graphic phasors**
- **Device diagnosis**
- **MATRIX status**
- **Access to logs and other information**

Boost operational efficiency with the embedded web-HMI

Quickly and conveniently configure, monitor, and operate your Easergy P5 protection relay with our web-HMI. The web-HMI, accessible online via IP address of the relay, doesn't require you to install specific computer software - simply use your web browser to connect to the device. You only need to enable the web server service during the initial configuration of Easergy P5 with eSetup Easergy Pro. The web-HMI is based on the same page design as eSetup Easergy Pro, making it easy to use!

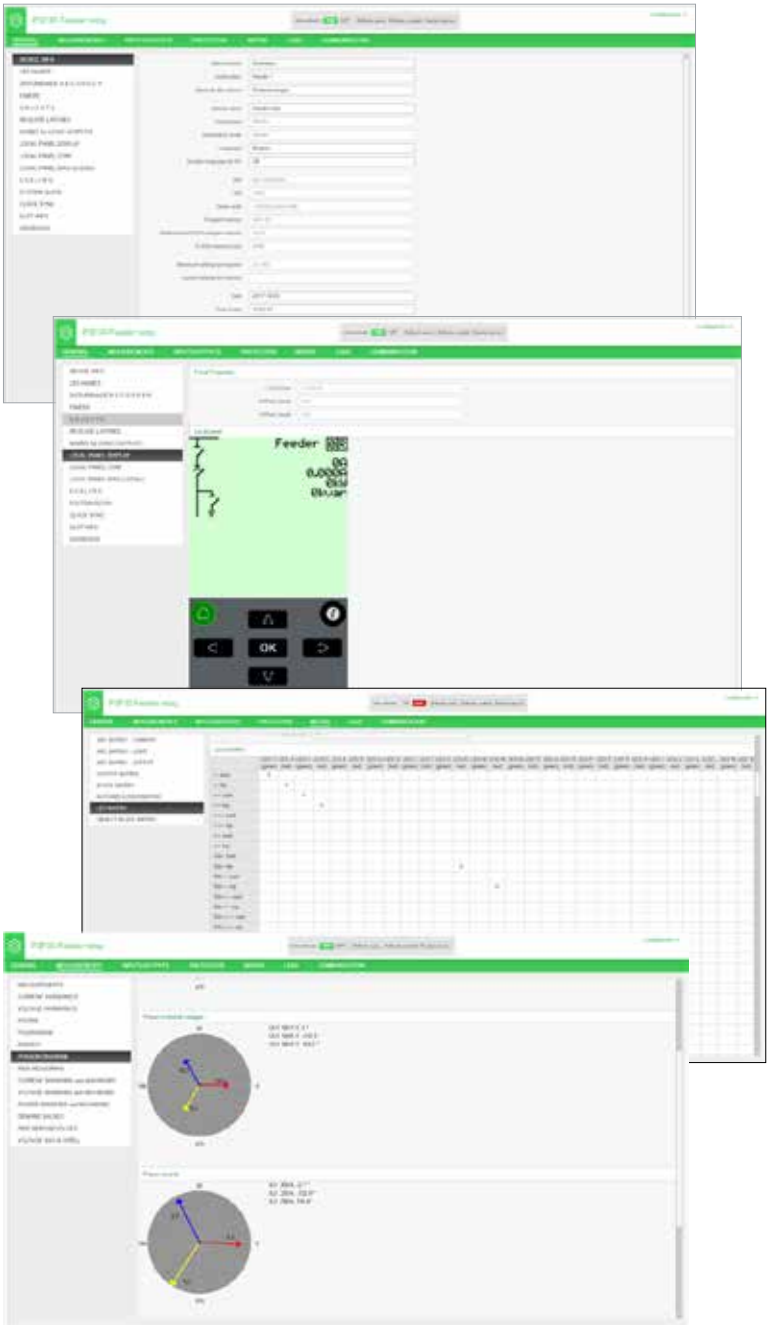

Mobile application

Description

EcoStruxure™ Power Device app

Within the palm of your hand you can be connected to your Schneider Electric:

- Masterpact MTZ air circuit breaker
- TeSys GV4 motor circuit breaker
- Easergy P5 protection relays
- ... and more!

EcoStruxure Power Device app is a single mobile application with necessary information and capabilities to operate and efficiently maintain devices in the EcoStruxure architecture.

This app can be installed on your IOS and Android smartphone. The protection devices can be identified on the app by simply scanning their QR codes.

Wireless communication is possible via by WIFI, Bluetooth, NFC technologies for operation and monitoring within the proximity of the devices. Get real time notifications about the electrical installation: load levels, health status, warnings and alarms, protection settings…and more!

Free download EcoStruxure Power Device on:

Download on the App Store

GET IT ON Google Play

(1) Wi-Fi is not embedded in Easergy P5, a separate Wi-Fi router connected to an Ethernet port of the device is required.

Additional Modules and Accessories

Additional Modules and Accessories

Communication accessories 70

Modules 70

Sensors 75

Mounting accessories 77

Wiring accessories 78

Communication accessories

Modules

Ethernet communication module with RSTP redundancy

DM101268

Ethernet TP module

REL51038: Ethernet TP module

The Ethernet communication module is inserted in the slot M of the device. It can be selected as an option when ordering the device or purchased later and installed on site. It is available in 2 versions for copper wire or fiber optic connection.

It provides RSTP (Rapid Spanning Tree Protocol), which allows fast reconfiguration of the communication system.

Characteristics

Standard	2 ports: 10/100 Base TX
Baud rate	10 or 100 Mbits/s
Type of cable	Standard Ethernet CAT 5
Connection	RJ45

DM101267

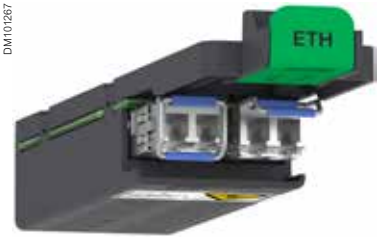

Ethernet FO module

REL51039: Ethernet FO module

Characteristics

Standard	2 ports: 100 Base FX	
Baud rate	100 Mbits/s	
Fiber type	Multimode glass fiber	
Wavelength	1300 nm	
Connection	LC	
Maximum attenuation (fiber optic + connectors)	Fiber optic diameter	Max attenuation
	50/125 or 62.5/125 µm	14 dB

DANGER

HAZARD OF DAMAGE TO THE EYES

Never look into the end of a fiber optic or connectors of the module

Failure to follow these instructions will result in death or serious injury.

Communication accessories

Modules

DM101266

Ethernet HSR/PRP FO module

Ethernet communication module with HSR and PRP redundancy

REL51033: Ethernet HSR/PRP FO module

The Ethernet communication module with HSR and PRP redundancy is inserted in both slots M and N of the device. It can be selected as an option when ordering the device or purchased later and installed on site. It requires fiber optic connection.

It provides PRP (Parallel Redundancy Protocol) and HSR (High-availability Seamless Redundancy) – selectable by configuration, which allow instantaneous reconfiguration of the communication system without communication packet loss.

This module includes a 12VDC input for connection of a back-up power supply: when the main power supply of Easergy P5 is switched off, the communication module is still energized and the communication loop is not interrupted.

Characteristics

Standard	2 ports: 100 Base FX	
Baud rate	100 Mbits/s	
Fiber type	Multimode glass fiber	
Wavelength	1300 nm	
Connection	LC	
Maximum attenuation (fiber optic + connectors)	Fiber optic diameter	Max attenuation
	50/125 or 62.5/125 µm	14 dB

Back-up power supply input

Rated voltage	12VDC ±20%
Burden	0.5 W
Dielectric withstand	500V, 50Hz, 1mn

DANGER

HAZARD OF DAMAGE TO THE EYES

Never look into the end of a fiber optic or connectors of the module

Failure to follow these instructions will result in death or serious injury.

Communication accessories

Modules

Serial line communication module

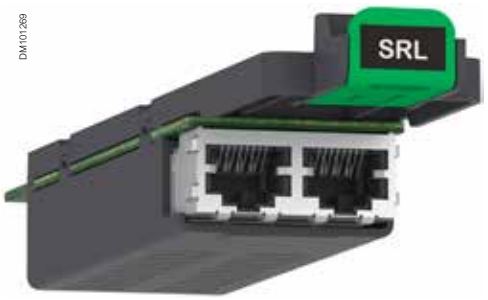

RS485 serial line module

REL51036: RS485 serial line module

The Serial line communication module is inserted in the slot N of the device. It can be selected as an option when ordering the device or purchased later and installed on site. It is available in 2 versions for RS485 or fiber optic connection.

Characteristics

Standard	EIA 2-wire RS485 differential or EIA 4-wire RS485 differential (selection by configuration)
Line polarization	12V, internally provided
Connection	2x RJ45 – pin-out as follows: 1. RXD0 2. RXD1 4. TXD1 (D1) 5. TXD0 (D0) 8. Common

Note: the REL 51053 accessory is used for line termination. (To be ordered separately)

Fibre optic serial line module

REL51040: Fiber optic serial line module

Characteristics

Fiber type	Multimode glass fiber	
Wavelength	820 nm	
Connection	ST	
Maximum attenuation (fiber optic + connectors)	Fiber optic diameter	Max attenuation
	50/125 µm	5.6
	62.5/125 µm	9.4
	100/140 µm	14.9
	200 (HCS) µm	19.2

⚠ DANGER

HAZARD OF DAMAGE TO THE EYES

Never look into the end of a fiber optic or connectors of the module

Failure to follow these instructions will result in death or serious injury.

Communication accessories

Modules

DM101271

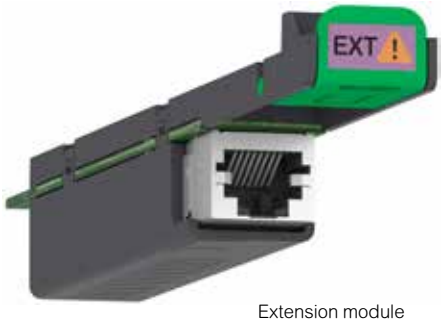

Extension module

Extension module

REL51034: Extension module

The Extension module is inserted in the slot P of the device. It can be selected as an option when ordering the device or purchased later and installed on site. It provides:

- connection to the external modules
- automatic back-up of data:
  - active configuration file
  - disturbance records
  - motor-startup records (when available)
  - sequence of events records
  - power system maintenance data log
  - maintenance data of circuit-breaker, switches, motor and transformer (whichever available)

Characteristics

Connection	RJ45
Type of cable	Specific cables have the following references: • 59660: length 0.6m • 59661: length 2m • 59662: length 4m

Communication accessories

Modules

PE80863

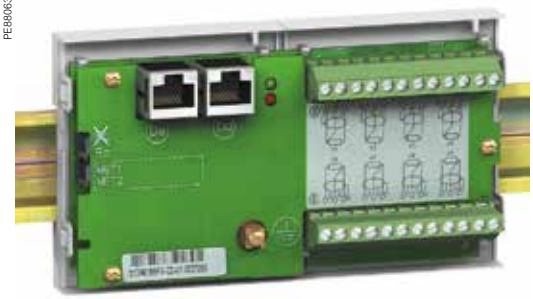

DE80205

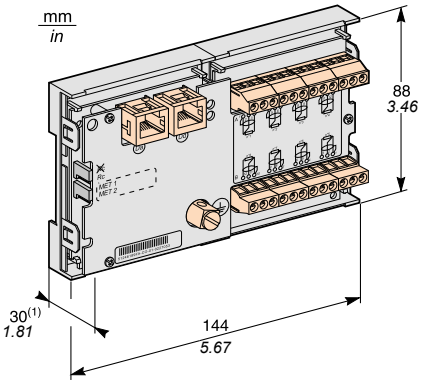

Temperature sensor module

59641: Temperature sensor module

The Temperature sensor module is an external module used for temperature measurement with Resistance Temperature Detectors (RTDs). It is connected to the extension module. It can be selected as an option when ordering the device or purchased later and installed on site. It provides 8 RTD inputs.

It does not require any auxiliary supply connection.

Mechanical characteristics

Assembly	Symmetrical DIN rail

RTD input

Connection	Screw-type terminals
Type of cable	Shielded cable
Type of RTD	Pt100, Ni100, Ni120
Current injected in the RTD	4 mA

DM107171

IRIG-B module

REL51045: IRIG-B module

The IRIG-B module is an external module used for accurate time synchronization. It is connected to the extension module. It can be selected as an option when ordering the device or purchased later and installed on site. The module provides both a modulated (MOD INPUT) and an unmodulated input (UNMOD INPUT) and can automatically detect which input type is used by the user. No configuration of input type is needed in the Easergy P5 protection relay.

It does not require any auxiliary supply connection.

Mechanical characteristics

Assembly	Symmetrical DIN rail

Modulated IRIG-B input

Connection	BNC socket
Type of cable	50 ohm coaxial
Time code format	B124, B125 (1)
Input signal level	200mV to 20V

Demodulated IRIG-B input

Connection	Screw-type terminals
Type of cable	Twisted pair
Time code format	B004, B005 (1)
Input signal level	TTL

(1) according to standard 200-04

Communication accessories

Sensors

DE88206

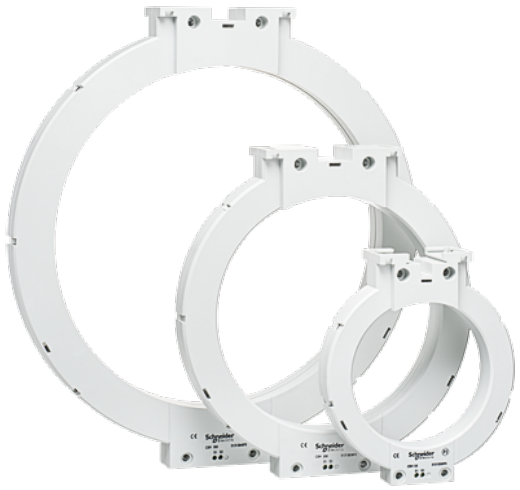

CSH120, CSH200 and CSH300 core balance CTs.

CSH core-balance current transformers

The specifically designed CSH120, CSH200 and CSH300 core balance CTs are for direct residual or earth/ground fault current measurement. The only difference between them is the diameter.

Due to their low voltage insulation, they can only be used on shielded cables.

Core balance CT	59635: CSH120	59636: CSH200	59637: CSH300
Inner diameter	120 mm (4.7 in)	200 mm (7.9 in)	300 mm (11.8 in)
Weight	0.6 kg (1.32 lb)	1.4 kg (3.09 lb)	
Transformation ratio		1/470	
Maximum permissible current		20 kA - 1 s	

Dimensions

DE88396

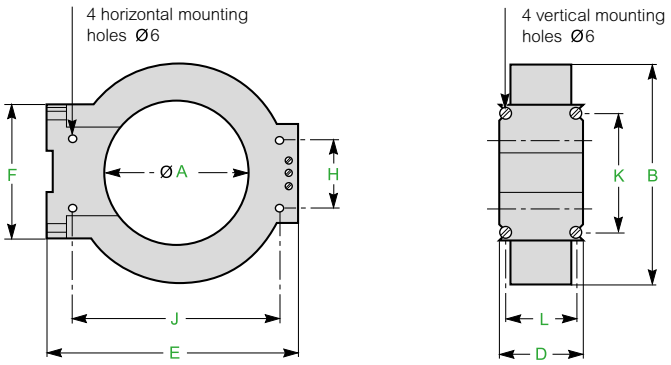

	59635: CSH120		59636: CSH200		59637: CSH300	
	mm	in.	mm	in.	mm	in.
A	120	4.75	196	7.72	291	11.46
B	164	6.46	256	10.1	360	14.17
D	44	1.73	46	1.81		
E	190	7.48	274	10.8	390	15.35
F	80	3.14	120	4.72	120	4.72
H	40	1.57	60	2.36	60	2.36
J	166	6.54	254	10	369	14.53
K	65	2.56	104	4.09		
L	35	1.38	37	1.46		

Arc-flash sensors

For Easergy P5x30 only

Sensors description

The sensor is used by an arc-flash protection device (Easergy P5 Advanced) or system to detect the light coming from the arc-flash incident.

The Easergy P5 Advanced arc-flash sensor is activated by strong light. The sensor transforms the light information into the current signal, which is used by the protection device to indicate arc-flash.

Arc-flash sensors										
Characteristics	**REL52801**	**REL52802**	**REL52803**	**REL52804**	**REL52805**	**REL52806**	**REL52807**	**REL52808**	**REL52809**	**REL52810**
Material	Plastic									
Type	Standard						Pipe			
Weight	*1,000 g*	*1,300 g*	1,300 g	300 g	400 g	400 g	1,000 g	1,300 g	300 g	400 g
	2.20 lb	*2.87 lb*	2.87 lb	0.66 lb	0.88 lb	0.88 lb	2.20 lb	2.87 lb	0.66 lb	0.88 lb
Cable length (m)	6	20	20	6	6	6	20	20	6	6
Shielded cable	-	-	●	-	-	●	-	●	-	●
Halogen free	-	●	-	●	-	-	-	-	-	-
Environment	Pollution Degree 2									
Operation temperature	-25°C *(-13°F)* to +70°C *(+158°F)*									
Light spectrum sensitive area	400 – 1100 nm									
Detection time	1 ms									
Light sensitivity	8 000 – 10 000 lux									
Loop supervision	Yes									

To connect the interface in the Easergy P5 Standard devices, use REL52883 cable.

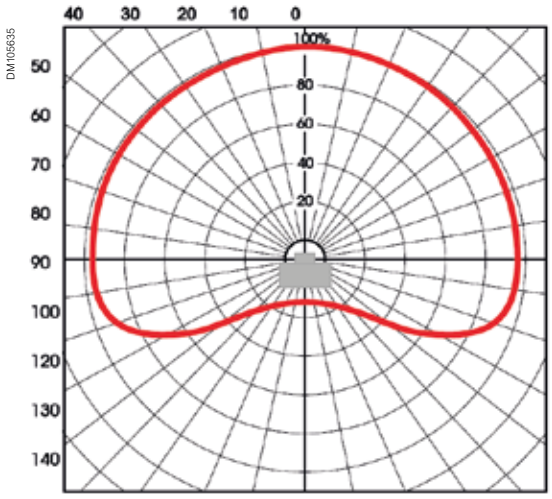

Sensitivity area

REL52801 - 52806 dimensions

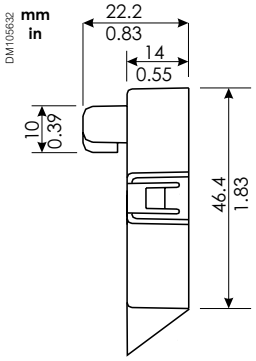

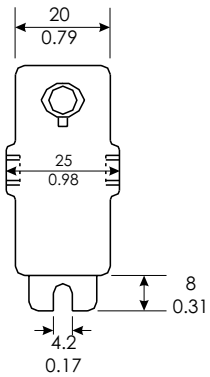

REL52807 - 52810 dimensions

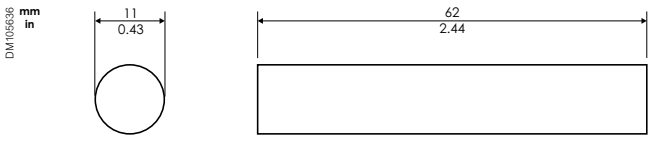

Arc-flash sensor: Pipe type

Mounting accessories

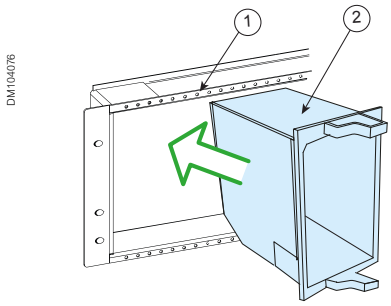

Assemble the case (2) and the rack frame (1)

The Easergy protection relays are available for flush mounting or rack mounting.

Rack mounting accessories

Rack mounting frames have been designed to have dimensions in accordance with IEC60297 and are supplied ready-to-use. On a standard 483mm (19") rack system, this enables combinations up to four Easergy P52 units. If the full 80TE space is not used, blanking plates (10TE, 20TE and 30TE) are also available.

REL51021: 19 inch rack mounting accessory

This reference can be used with all Easergy P5x20 and P5x30 relays..

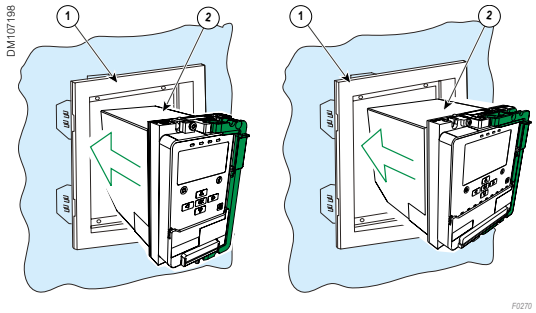

Assemble the cross socks flush (1) and the case (2)

Flush mounting accessories

Easergy protection relays may be flush mounting. Dedicated accessories will help for an easy and quick installation:

REL51032: 20TE Flush mounting accessory

This reference can be used with all Easergy P5x20 relays..

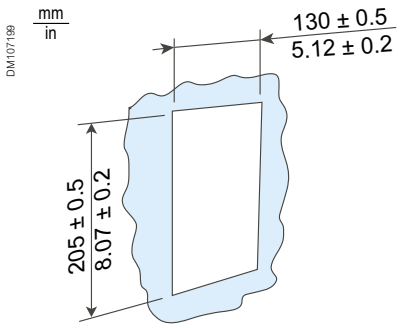

REL51052: 30TE Flush mounting accessory

This reference can be used with all Easergy P5x30 relays..

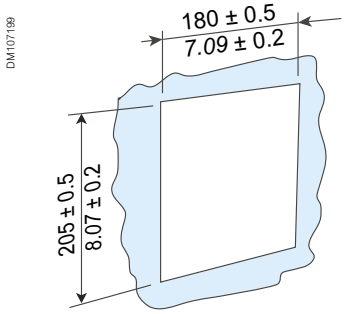

Wiring accessories

90° Ring wiring	Commercial reference	Wire section	Description
DM107172 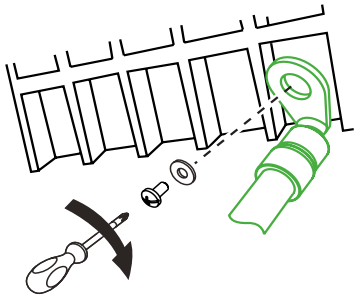	REL51059	0.5 to 1.5 mm^2 (AWG 20 ... 16)	Ring lug terminal 3.68 mm (0.14 in.) Color: RED
	REL51060	1.5 to 2.5 mm^2 (AWG 16 ... 14)	Ring lug terminal 4.45 mm (0.18 in.) Color: BLUE
	REL51061	2.5 to 6 mm^2 (AWG 14 ... 10)	Ring lug terminal 6.35 mm (0.25 in.) Color: YELLOW

Comb-busbars for wiring at slots C, D, E	Commercial reference	Quantity pack	Description
To facilitate the wiring of the terminals in Slots C, D, E of Easergy P5 protection relay, the user can order the following comb-busbars that are provided in 50-pieces or 100-pieces packs.			
DM107173	REL51054	100 pcs.	2-pin comb-busbar
DM107174 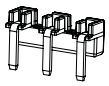	REL51055	100 pcs.	3-pin comb-busbar
DM107175 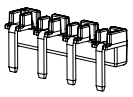	REL51056	50 pcs.	4-pin comb-busbar
DM107176 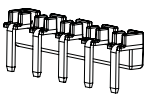	REL51057	50 pcs.	5-pin comb-busbar
DM107177 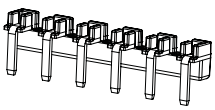	REL51058	50 pcs.	6-pin comb-busbar

Notes

Services

Services

Greater peace of mind throughout your installation lifecycle	82
On-site condition maintenance with ProDiag MV Relay	83
Achieve higher sustainability with ECOFIT™ solutions	84
The most eco-friendly products in the industry	85

Greater peace of mind throughout your installation lifecycle

How can you cut costs and improve performance at the same time?

When it comes to your electrical distribution infrastructure, the answer is straightforward: get professional expertise.

Life cycle services

DM409843

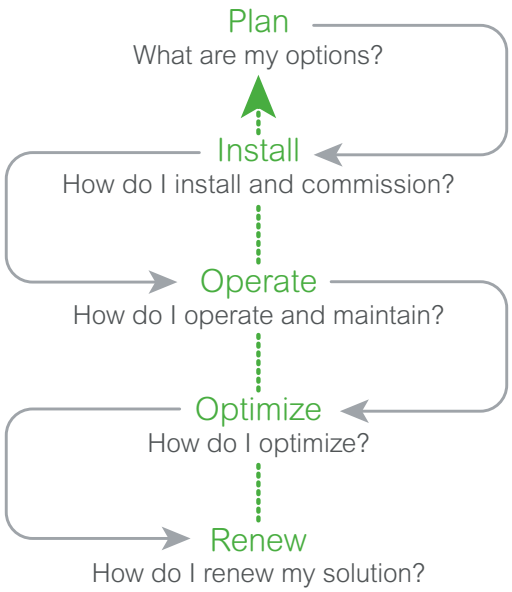

When it comes to your electrical distribution installation, we can help you:

- Increase productivity, reliability, and safety
- Mitigate risk and limit downtime
- Keep equipment up to date and extend lifespan
- Cut cost and increase savings
- Improve your return on investment

CONTACT US!

https://www.schneider-electric.com/en/work/services/field-services/electrical-distribution/

Plan

Schneider Electric helps you plan the full design and execution of your solution, looking at how to make your process more dependable and optimize time:

- **Technical feasibility studies:** Design solution in your environment
- **Preliminary design:** Accelerate turnaround time to reach a final solution design

Install

Schneider Electric will help you to install more efficient, more reliable and safer solutions based on your plans:

- **Project management:** Complete your projects on time and within budget
- **Commissioning:** Ensure your actual performance versus design, through on-site testing and commissioning, and tools and procedures

Operate

Schneider Electric helps you maximize your installation uptime and control your capital expenditures through its services offering:

- **Asset operation solutions:** Provide the information you need to increase safety, enhance installation performance, and optimize asset maintenance and investment
- **Advantage service plans:** Customize service plans that include preventive, predictive and corrective maintenance
- **On-site maintenance services:** Deliver extensive knowledge and experience in electrical distribution maintenance
- **Spare parts management:** Ensure spare parts availability and optimized maintenance budget of your spare parts
- **Technical training:** Build necessary skills and competencies to properly and safely operate your installations

Optimize

Schneider Electric proposes recommendations for improved safety, availability, reliability and quality:

- **MP4 electrical assessment:** Define an improvement and risk management program

Renew

We extend the life of your system while providing upgrades and offers to take full responsibility for the end-of-life processing of old electrical equipment:

- **Retrofit:** Keep up to date and improve the performance of electrical installations
- **MV product end of life:** Recycle and recover outdated equipment with end-of-life services

On-site condition maintenance with ProDiag MV Relay

DM107178

Why carry out diagnostics?

Business competitiveness depends strongly on productivity, and productivity means uptime. On-site condition maintenance, with regular diagnostics, provides a long-term solution to avoid downtime.

Why perform Easergy relay diagnostics with Schneider Electric?

Schneider Electric offers a complete range of maintenance services to provide you with the necessary level of maintenance for your Easergy devices. Having Schneider Electric at your side means our highly qualified personal can perform the right maintenance, while complying with manufacturer procedures and international services.

Diagnosing protection relay tripping capability

The ProDiag MV Relay diagnostic solution should be used on MV protection relays that have not received any diagnostics within the last four years.

This diagnostic checks the protection relay's conformity against the original product specifications to ensure that they meet their goals of:

- Reducing risks by isolating hazardous segments of the network where an electrical fault has been detected
- Maintaining high energy availability to avoid a total power outage and costly downtime
- Maximizing uptime by performing in-depth analysis and de-energizing equipment only when absolutely necessary

ProDiag MV Relay's unique features:

- Automatic download of all protection relay settings through drivers in the ProDiag MV Relay manager
- Easy verification of modifications made to protection settings since the last visit
- Easy verification of MV Relay original technical specifications

EM100201

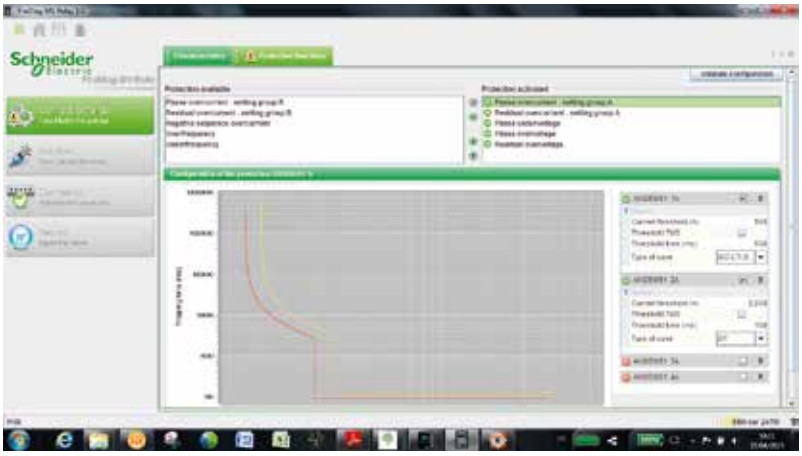

ProDiag MV Relay: Included in the extended 10-year warranty*

The Easergy P5 extended 10-year warranty applies under the following conditions:

- The product is registered within 18 months. Simply use the "My Schneider" app to scan the QR code found on the front of your Easergy P5
- The ProDiag MV Relay diagnostic is performed every FOUR YEARS (when Easergy P5 is used under normal operating conditions)
- Any replaced or repaired products have the latest hardware and firmware versions, and are functionally compliant with the original product

Easergy 10 years Warranty

* Standard warranty 2 years.
Please check with your local Schneider Electric representative for extended warranty availability and conditions.

Achieve higher sustainability with ECOFIT™ solutions

Modernizing and upgrading your medium voltage switchgear doesn't need to mean your existing infrastructure is destructed.

Schneider Electric retrofit solutions, combined with proper switchgear maintenance helps you to improve the reliability of your installation while achieving higher sustainable performance with ECOFIT™ - a Green Premium™ service.

ECOFIT™ for your MV Switchboard

- Extend your switchgears lifetime
- Access asset and energy management with digitization
- Reduce your environmental impact
- Enhance your process dependability
- Optimize your maintenance service costs and limit your investment
- New ECOFIT™ spare parts availability.

A true extended life time with ECOFIT™

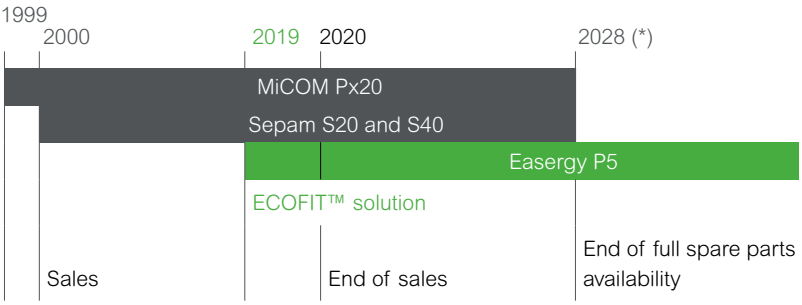

(*) Please consult Schneider electric

ECOFIT™ offers:

	Sepam S20	Sepam S40	MiCOM Px20	Easergy P5
Case	Flush mounting	Flush mounting	20TE or 30TE size Flush mounting	20TE or 30TE size Flush mounting
Installation	Fix	Fix	Withdrawable case	Withdrawable case
Language	Multilanguage	Multilanguage	Multilanguage	Multilanguage
Communication	IEC 60870-5-103 DNP3 Modbus serial	IEC 61850 Station bus IEC 60870-5-103 DNP3 Modbus serial Modbus Ethernet	Modbus serial Kbus Courier IEC60870-5-103 DNP3	IEC 61850 Ed.1 & Ed.2 IEC 60870-5-103 & 101 IEC 60870-5-101 Ethernet DNP3 Ethernet DNP3 serial Modbus Ethernet Modbus serial EtherNet/IP
Power supply	24 - 250 Vdc 48 - 240 Vac	24 - 250 Vdc 48 - 240 Vac	24 - 250 Vdc 48 - 240 Vac	24 - 250 Vdc 100 - 230 Vac
Control LED	11 LEDs	11 LEDs	8 LEDs	20TE model: 10 LEDs 30TE model: 14 LEDs
Cyber security	No	No	No	Yes
Arc-flash	No	No	No	30TE model: 0 to 6 sensors
Back up memory	No	No	No	Yes
Compatibility with	20TE model: S20 / S24 / T20 / T24 / B21 / B22 / M20	30TE model: S40 / S41 / S42 / S43 / S44 / S50 / S51 / S52 / S53 / S54 / T40 / T42 / T50 / T52 / M40 / M41 / G40	20TE model: P120 / P121 / P122 /P123 / P921 / P922 / P923 / P721 / P723 / P920 30TE model: P126 / P127 / P225 / P521 / P220 / P125	

Environmental information with Green Premium™ ecolabel

An industry leading portfolio of offers delivering sustainable value

More than 75% of our product sales offer superior transparency on the material content, regulatory information and environmental impact of our products:

- RoHS compliance
- REACh substance information
- Industry leading # of PEP's*
- Circularity instructions

Discover what we mean by green
Check your products!

The Green Premium program stands for our commitment to deliver customer valued sustainable performance. It has been upgraded with recognized environmental claims and extended to cover all offers including Products, Services and Solutions.

CO_2 and P&L impact through… Resource Performance

Green Premium brings improved resource efficiency throughout an asset's lifecycle. This includes efficient use of energy and natural resources, along with the minimization of CO_2 emissions.

Cost of ownership optimization through… Circular Performance

We're helping our customers optimize the total cost of ownership of their assets. To do this, we provide IoT-enabled solutions, as well as upgrade, repair, retrofit, and remanufacture services.

Peace of mind through… Well-being Performance

Green Premium products are RoHS and REACh compliant. We're going beyond regulatory compliance with step-by-step substitution of certain materials and substances from our products.

Improved sales through… Differentiation

Green Premium delivers strong value propositions through third-party labels and services. By collaborating with third-party organizations we can support our customers in meeting their sustainability goals such as green building certifications.

*PEP: Product Environmental Profile (i.e. Environmental Product Declaration)

Ordering

Ordering

Easergy P5 configurator 88

Ready-to-use configuration 89

P5x20 ordering variants 89

P5x30 ordering variants 90

Additional modules ordering variants 91

Accessories ordering variants 92

Tools 93

Easergy P5 configurator

Selecting product

Easergy P5 CONFIGURATOR:
The unique web tool to quickly and easily configure your Easergy P5.

Fast and Simple

See more on:

- schneider-electric.com/easergy-p5

Or clic directly on : **help me choose tool**

EM100202

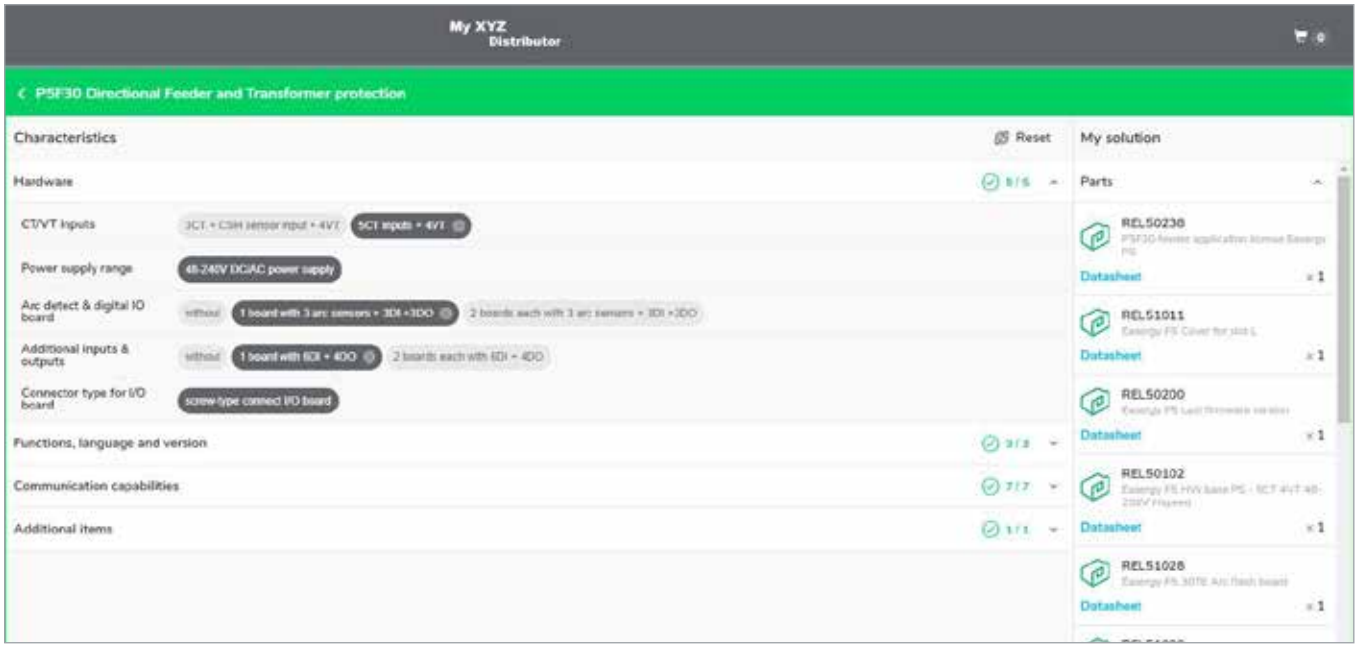

Ready-to-use configuration

P5x20 ordering variants

Easergy P5x20 ordering variants

- Please indicate the Part No. (for example: **REL50006**) to your Schneider Electric correspondant
- For other variants please contact your Schneider Electric correspondant

The order forms can be used to define Easergy P5 accessories.

Part No.	Qty.	Designation
Easergy P5U20 Current relay		
REL50301	☐ P5U20-AABA-BAAAA-AAAA	24-250V 3CT 2Io 4DI-4DO no comm + no extension + CS Level 0
REL50302	☐ P5U20-AABA-CAAAA-AAAA	24-250V 3CT 1CSH 4DI-4DO no comm + no extension + CS Level 0
REL50303	☐ P5U20-AABB-BAAAA-AAAA	24-250V 3CT 2Io 10DI-8DO no comm + no extension + CS Level 0
REL50304	☐ P5U20-AABB-CAAAA-AAAA	24-250V 3CT 1CSH 10DI-8DO no comm + no extension + CS Level 0
REL50331	☐ P5U20-AABA-BABAH-AAAA	24-250V 3CT 2Io 4DI-4DO RSTP Eth RJ45 + extension + CS Level 0
REL50332	☐ P5U20-AABA-CABAH-AAAA	24-250V 3CT 1CSH 4DI-4DO RSTP Eth RJ45 + extension + CS Level 0
REL50333	☐ P5U20-AABB-BABAH-AAAA	24-250V 3CT 2Io 10DI-8DO RSTP Eth RJ45 + extension + CS Level 0
REL50334	☐ P5U20-AABB-CABAH-AAAA	24-250V 3CT 1CSH 10DI-8DO RSTP Eth RJ45 + extension + CS Level 0
Easergy P5V20 Voltage relay		
REL50305	☐ P5V20-AABA-DAAAA-AAAA	24-250V 4VT 4DI-4DO no comm + no extension + CS Level 0
REL50306	☐ P5V20-AABB-DAAAA-AAAA	24-250V 4VT 10DI-8DO no comm + no extension + CS Level 0
REL50339	☐ P5V20-AABA-DABAH-AAAA	24-250V 4VT 4DI-4DO RSTP Eth RJ45 + extension + CS Level 0
REL50340	☐ P5V20-AABB-DABAH-AAAA	24-250V 4VT 10DI-8DO RSTP Eth RJ45 + extension + CS Level 0

Ready-to-use configuration

P5x30 ordering variants

Easergy P5x30 ordering variants

- Please indicate the Part No. (for example: **REL50006**) to your Schneider Electric correspondant
- For other variants please contact your Schneider Electric correspondant

The order forms can be used to define Easergy P5 accessories.

Part No.	Qty.	Designation
Easergy P5F30 Feeder protection relay		
REL50401	☐	P5F30-AACB-GAAAA-AAAA 48-250V 3CT 2Io 4VT 10DI-8DO no comm + no extension + CS Level 0
REL50402	☐	P5F30-AACB-HAAAA-AAAA 48-250V 3CT 1CSH 4VT 10DI-8DO no comm + no extension + CS Level 0
REL50404	☐	P5F30-BACB-GAAAA-AAAA 48-250V 3CT 2Io 4VT 16DI-12DO no comm + no extension + CS Level 0
REL50405	☐	P5F30-BACB-HAAAA-AAAA 48-250V 3CT 1CSH 4VT 16DI-12DO no comm + no extension + CS Level 0
REL50451	☐	P5F30-AACB-GABAH-AAAA 48-250V 3CT 2Io 4VT 10DI-8DO RSTP Eth RJ45 + extension + CS Level 0
REL50452	☐	P5F30-AACB-HABAH-AAAA 48-250V 3CT 1CSH 4VT 10DI-8DO RSTP Eth RJ45 + extension + CS Level 0
REL50453	☐	P5F30-BACB-GABAH-AAAA 48-250V 3CT 2Io 4VT 16DI-12DO RSTP Eth RJ45 + extension + CS Level 0
REL50454	☐	P5F30-BACB-HABAH-AAAA 48-250V 3CT 1CSH 4VT 16DI-12DO RSTP Eth RJ45 + extension + CS Level 0
Easergy P5M30 Motor protection relay		
REL50407	☐	P5M30-AACB-GAAAA-AAAA 48-250V 3CT 2Io 4VT 10DI-8DO no comm + no extension + CS Level 0
REL50408	☐	P5M30-AACB-HAAAA-AAAA 48-250V 3CT 1CSH 4VT 10DI-8DO no comm + no extension + CS Level 0
REL50410	☐	P5M30-BACB-GAAAA-AAAA 48-250V 3CT 2Io 4VT 16DI-12DO no comm + no extension + CS Level 0
REL50411	☐	P5M30-BACB-HAAAA-AAAA 48-250V 3CT 1CSH 4VT 16DI-12DO no comm + no extension + CS Level 0
REL50455	☐	P5M30-AACB-GABAH-AAAA 48-250V 3CT 2Io 4VT 10DI-8DO RSTP Eth RJ45 + extension + CS Level 0
REL50456	☐	P5M30-AACB-HABAH-AAAA 48-250V 3CT 1CSH 4VT 10DI-8DO RSTP Eth RJ45 + extension + CS Level 0
REL50457	☐	P5M30-BACB-GABAH-AAAA 48-250V 3CT 2Io 4VT 16DI-12DO RSTP Eth RJ45 + extension + CS Level 0
REL50458	☐	P5M30-BACB-HABAH-AAAA 48-250V 3CT 1CSH 4VT 16DI-12DO RSTP Eth RJ45 + extension + CS Level 0

Ready-to-use configuration

Additional modules ordering variants

Additional modules

Qty.	Designation
Communication modules	
REL51038	Ethernet TP module - slot M
REL51039	Ethernet FO module - slot M
REL51042	Ethernet TP module - slot L
REL51033	Ethernet HSR/PRP FO module - slots MN
REL51036	RS485 serial line module - slot N
VW3A8306RC	RS485 line termination accessory
REL51040	Fiber optic serial line module - slot N
REL51034	Extension module - slot P
External modules	
59641	8 temperature sensor module (MET148-2)
REL51045	IRIG-B module
59660	0.6m remote module connection cord
59661	2m remote module connection cord
59662	4m remote module connection cord
Sensors	
59635	core balance CT, Ø=120mm (CSH120)
59636	core balance CT, Ø=200mm (CSH200)
EMS59572	VT adapter
REL52801	Arc-flash accessory VA1DA-20 Arc-flash sensor 20m
REL52802	Arc-flash accessory VA1DA-20S-HF Arc-flash sensor 20m shielded halogen free
REL52803	Arc-flash accessory VA1DA-20S Arc-flash sensor 20m shielded
REL52804	Arc-flash accessory VA1DA-6 Arc-flash sensor 6m connect cable
REL52805	Arc-flash accessory VA1DA-6S-HF Arc-flash sensor 6m shielded halogen free
REL52806	Arc-flash accessory VA1DA-6S Arc-flash sensor 6m shielded
REL52807	Arc-flash accessory VA1EH-20 Arc-flash sensor 20m pipe sensor
REL52808	Arc-flash accessory VA1EH-20S Arc-flash sensor 20m pipe sensor shielded
REL52809	Arc-flash accessory VA1EH-6 Arc-flash sensor 6m pipe sensor
REL52810	Arc-flash accessory VA1EH-6S Arc-flash sensor 6m pipe sensor shielded

Ready-to-use configuration

Accessories ordering variants

Accessories

	Qty.	Designation
Mounting accessories		
REL51032		20TE flush mounting accessory
REL51052		30TE flush mounting accessory
REL51021		19inch rack mounting accessory
REL51018		30TE blanking plate for rack mounting
REL51019		20TE blanking plate for rack mounting
REL51020		10TE blanking plate for rack mounting
Wiring accessories		
REL51054		2-pin comb-busbar for I/O - 100 pces
REL51055		3-pin comb-busbar for I/O - 100 pces
REL51056		4-pin comb-busbar for I/O - 50 pces
REL51057		5-pin comb-busbar for I/O - 50 pces
REL51058		6-pin comb-busbar for I/O - 50 pces
REL51059		90° ring wiring terminal red - 250 p
REL51060		90° ring wiring terminal blue - 250 p
REL51061		90° ring wiring terminal yellow - 250 p
Easergy Pro connection cable		
59700		PC cord USB

TOOLS

schneider-electric.com

This international web site allows you to access all the Schneider Electric solutions and product information via:

- Comprehensive descriptions
- Range datasheets
- A download area
- Product selectors

You can also access information dedicated to your business and contact your Schneider Electric country support.

PM103687

Web selector

This site allows you to access the Schneider Electric products in just two clicks via a comprehensive range of datasheets, with direct links to:

- Complete libraries: technical documents, catalogs, FAQs, brochures
- Selection guides from the e-catalog
- Product discovery sites and their animations

You will also find illustrated overviews, news to which you can subscribe, and a list of country contacts

Training

Training allows you to acquire the expertise (installation design, work with power on, etc.) to increase efficiency and improve customer service.

The training catalog includes beginner's courses in electrical distribution, knowledge of MV and LV switchgear, operation and maintenance of installations, and design of LV installations to give a few examples.

Life Is On | Schneider Electric™

Green Premium™ ecolabel product - Sustainable performance, by design

Schneider Electric Industries SAS
35, rue Joseph Monier - CS 30323
F92506 Rueil-Malmaison Cedex

© 2019 Schneider Electric. All Rights Reserved. Life Is On Schneider Electric is a trademark and the property of Schneider Electric SE, its subsidiaries and affiliated companies.
NRJED313567EN - 27th May 2019