Low voltage distribution

Catalogue | 2016

iBusway for Data Center

Schneider Electric

Overview

Why choose iBusway for Data Center 5

Overview **6**

iBusway is a key element of
our comprehensive data centers solution 6

A simple, secure solution 8

Presentation of functions **10**
Composition of the offer **10**

Solutions **12**
Which solution is right for you? **12**
Classic Pack **14**
Presentation 14
Line Pack **15**
Presentation 15
Advanced Pack **16**
Presentation 16
Tap-off units metering system with iEM3155 18
Line metering system with power meter 20
How to install a local triping alert? **22**

iBusway distribution design **24**
How to install Canalis lines? **24**
Organization of the redundancy system **25**
Rack supply with busbar trunking in a raised floor **27**
**Rack supply with busbar trunking
in an overhead installation** **29**
Positioning of feed units by cable **30**
Tap-off unit positioning **31**
Which tap-off unit do I need? **32**

Part numbers **34**
Tap-off unit **34**
With wander socket 34
With panel mounting 36
Metering tap-off unit with iEM3155 37
Protection devices **38**
Compatible with all solutions 38
Link150 communication tap-off unit **39**
Metering power supply with PM5350 ..... **41**
Feed unit with PM5350 power meter **42**
Line component **44**
Fastening **45**

Tools 46

iBusway around the world 47

Index of part numbers 48

Notes 50

Why choose iBusway for Data Center

Optimize your investment and reduce your power consumption

Information technology undergoes constant change. What will future servers be like? What technical, environmental and economic constraints will determine their maximum capacity within safe operating limits? All these questions are hard to answer, but they influence your decisions today.

How can you plan ahead for these changes?

> The Schneider Electric iBusway for Data Centers is a power distribution system for server racks, meeting your requirements for electrical power availability, energy savings and return on investment, while still allowing you to flexibly adapt to changing needs.

> The iBusway solution helps improve the continuity of service in your data center, optimize site energy efficiency, and reduce the long-term impact on the environment by reducing cabling and the waste generated during traditional retrofits.

This flexible, scalable and sustainable solution lets you invest for today's needs while preparing for tomorrow's possibilities.

Adaptable

The iBusway for Data Centers is designed for facilities from 150 m^2 to more than 5,000 m^2, with a power supply ranging from 150 to more than 10,000 kVA.

iBusway is a key element of our

Schneider Electric is world leader in integrated solutions for data centers: power distribution, secure power, cooling, pre-wired busbar trunking, control and monitoring.

Advantages of the solution

Coherent design

Optimization of investment: coherent design from the electricity supplier through to the servers, without need for overbuilding to obtain required availability levels.

Coordination

Perfect coordination between redundancy levels, equipment configuration and maintenance constraints.

Optimization

Tested and reliable solutions: complete technical architectures for operating dependability, on-site feedback, continual process improvement, and solution standardization.

Anticipation

Map solutions to quantified characteristics: availability, scalability, capital and operating costs.

Upgradeability

Flexibility and scalability made possible by an energy monitoring system that adjusts electrical distribution requirements.

Interoperability

Open protocols for monitoring and control, enhancing interoperability.

Environmentally friendly

Energy efficiency and environmental conservation.

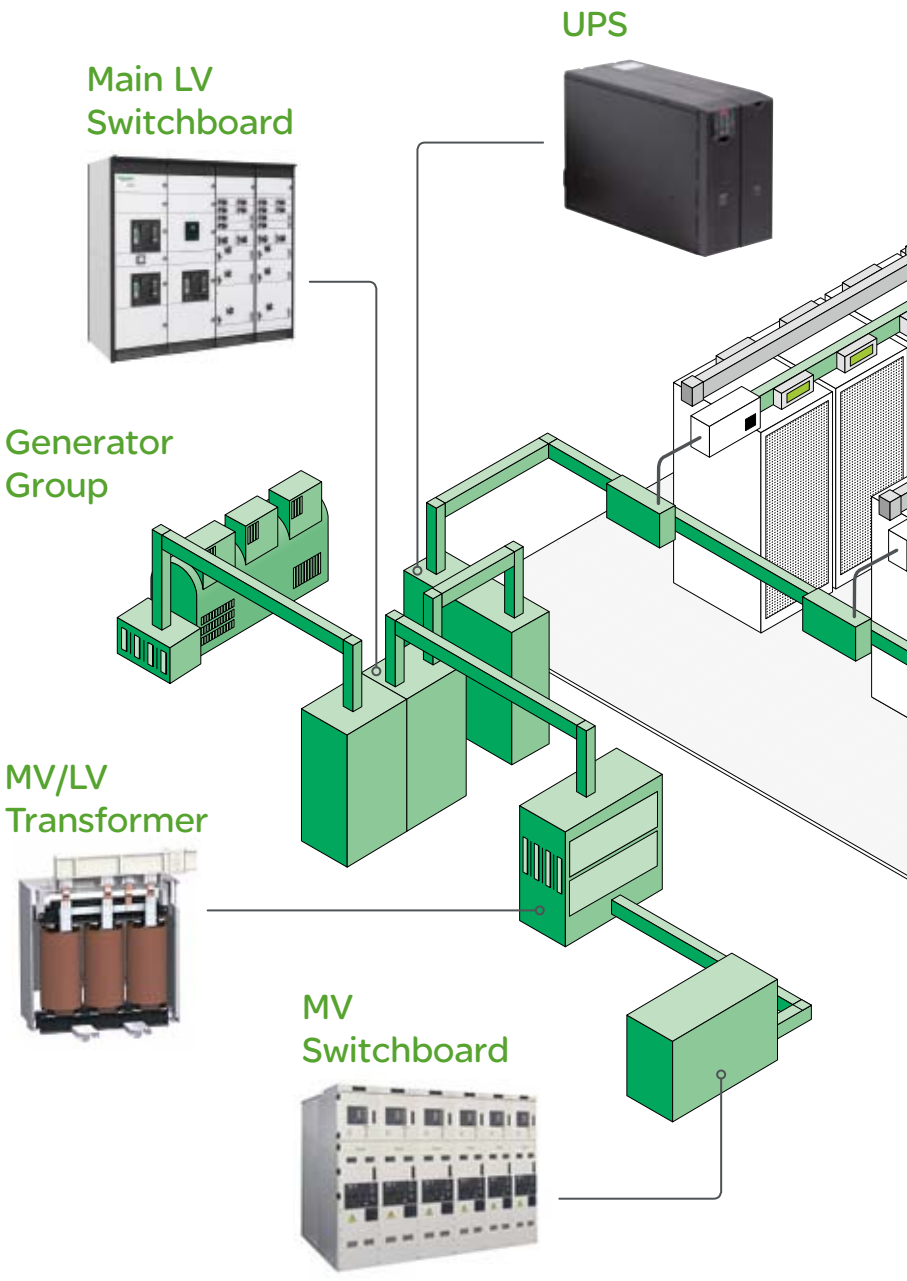

comprehensive data centers solution

The comprehensive offering includes:

> MV and LV switchboards
> Switching and paralleling systems
> Prefabricated busbar trunking
> Power monitoring units and protective relays
> Control and monitoring systems
> UPS systems and batteries

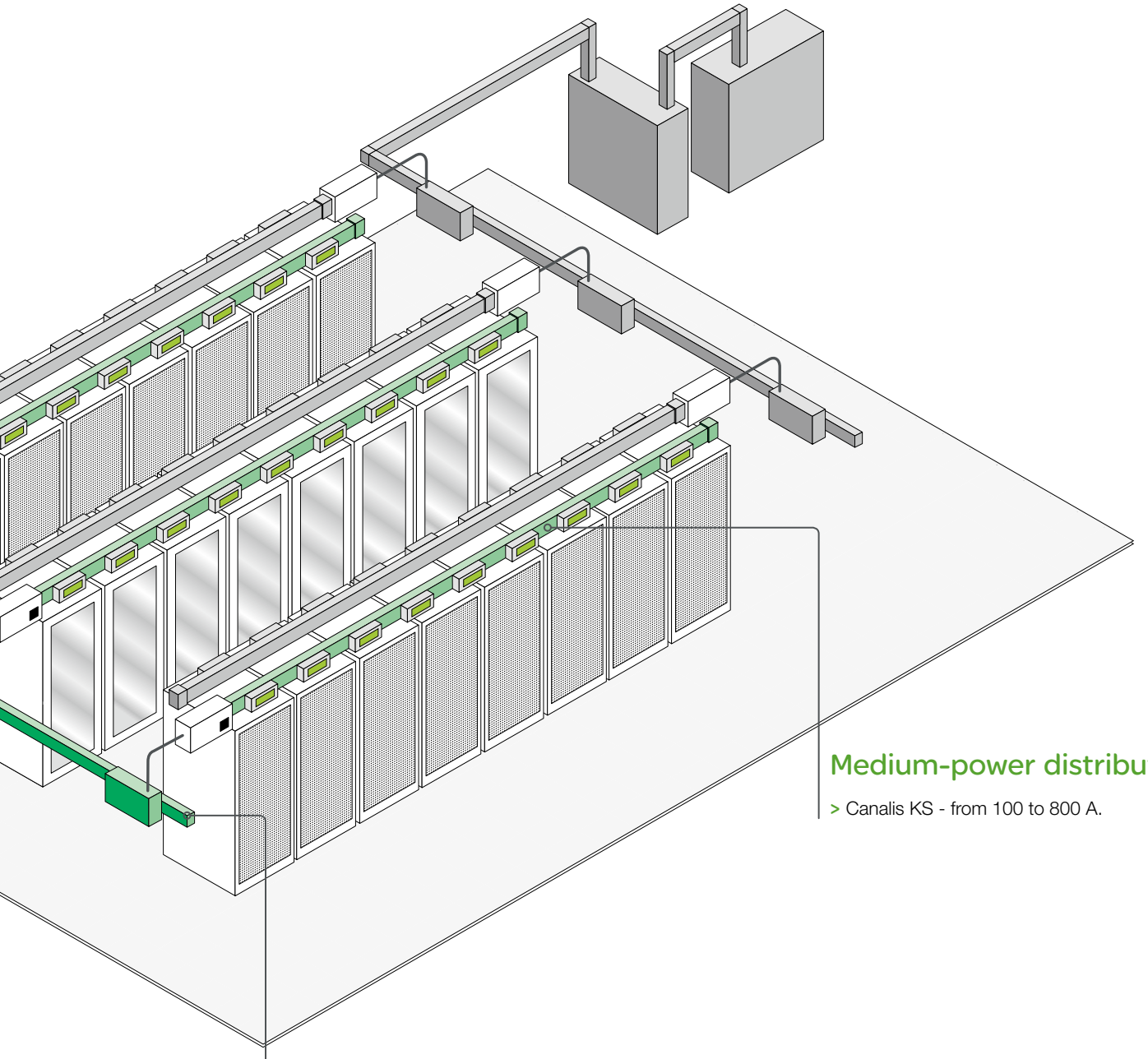

Medium-power distribution

> Canalis KS - from 100 to 800 A.

High-power distribution and power supply

> Canalis KT - from 800 to 5000 A.

A simple, secure solution

The Schneider Electric iBusway for Data Centers is the key component for high availability power distribution to all server racks in your data center.
Based on the Canalis KS prefabricated busbar trunking system, with plug-in tap-off units, monitoring and a specific control and monitoring system, iBusway for Data Centers is a plug-&-play solution for quickly installing or upgrading your facility.

iBusway for Data Center, a solution that is...

Flexible

Its modular format easily adapts to all types of data center, offering easy facility upgrading and equipment replacement while also providing energy consumption measurements.

Interconnected

The local monitoring system gives you a clear view of your server room in real time: power rate measurement, circuit-breaker status and power consumption for each individual rack.
The system's compatibility allows connection to the data center's overall monitoring system.

Easy to install

iBusway is a plug and play solution, with all components pre-wired and tested for fast, secure setup and software tools simplify architecture design.
Dedicated services for installation and start-up are also available.

Zero foot print

The iBusway solution takes up no floor space and offers more efficient use of dedicated rack areas.

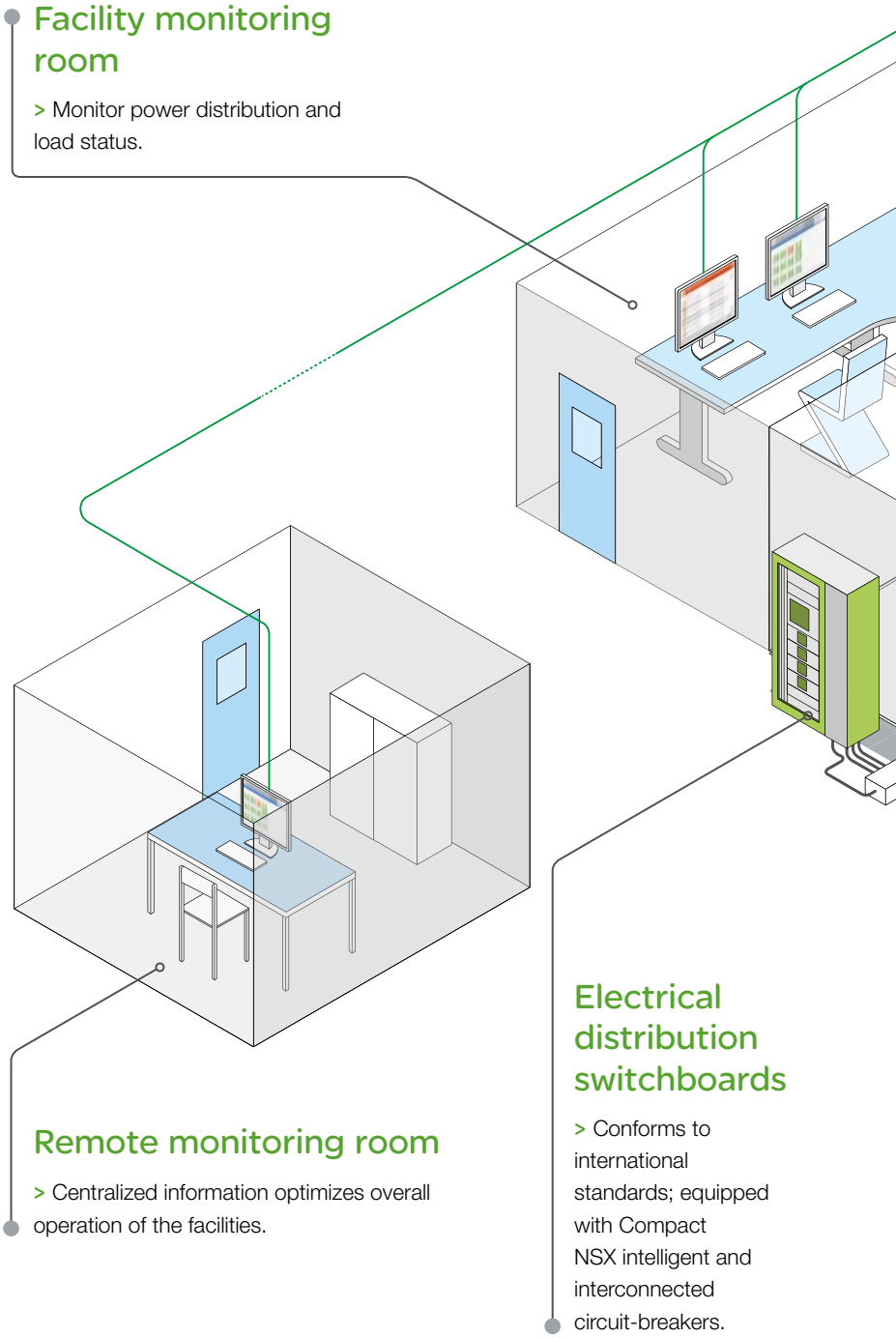

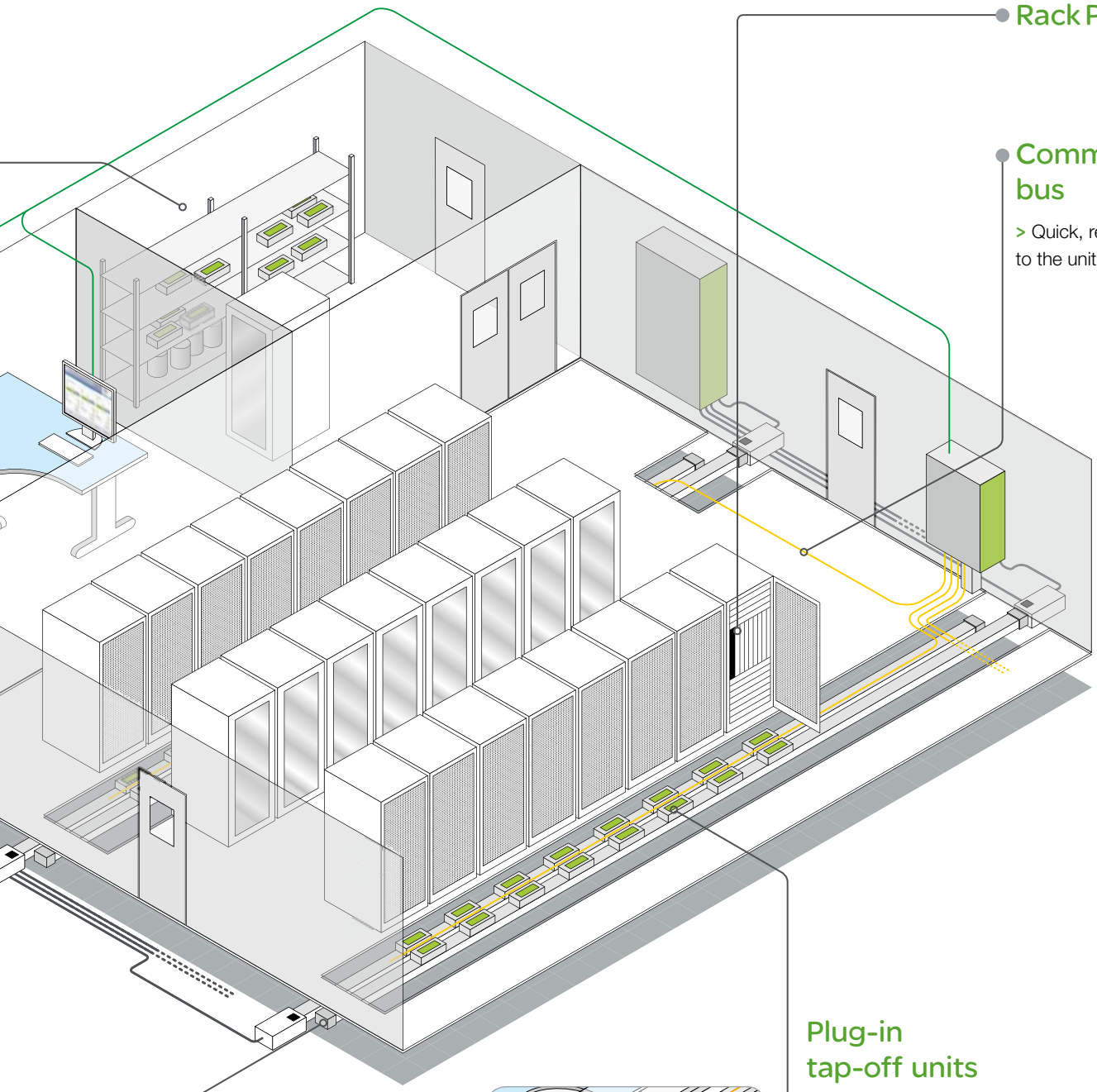

Rack PDU

Communication bus

> Quick, reliable connection to the units.

Plug-in tap-off units

> Pre-equipped and prewired with circuit-breakers, meters and communication equipment. They can be fitted live.

Prefabricated electrical busbar trunking

> Install either under raised flooring or above the racks.

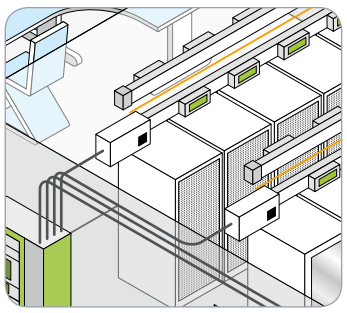

Composition of the offer

The solution described in this catalogue satisfies the final electrical distribution needs of the Data Center server racks.

It is based on an architecture consisting of:

> 100 A to 800 A prefabricated busbar trunking systems,
> 32 A to 160 A tap-off units,
> An energy monitoring system,
> Monitoring software.

The scope covered by the solution is the server room.

Protection

Against short-circuits and overloads by iC60

Trip indicator at head of the line

Information fed to monitoring or illuminated indicator bank showing overloads or trips

Energy and capacity metering

By energy meter (current, voltage, THD, etc.)

Composition of the offer

The general principle is to supply the racks using Canalis KS electrical busbar trunking, either overhead or in a raised floor.

Local tripping indication

By indicator lights on the tap-off units

Connection to monitoring system

StruxureWare Power Monitoring /
StruxureWare Data Center Expert

of functions

Which solution is right for you?

3 solutions

	Classic Pack	Line Pack	Advanced Pack
	A1, A2	B1, C1	B2, B3, C2, C3
	Architectures detailed in the table opposite		
Protection	■	■	■
Line tripping alert		■	■
Line load alert		■	■
Rack tripping alert			■
Rack load alert			■
Energy and capacity metering for: Line		■	■
Energy and capacity metering for: Tap-off unit			■
Energy and capacity metering for: Rack			■
Connection to management system		■	■
Configuration in the server room			
Local tripping alert		OPTION	OPTION

Which solution is right for you?

	A	B	C
	No line monitoring	Row load and consumption management	Row load and consumption management Row load and track tripping alert
1 No rack monitoring	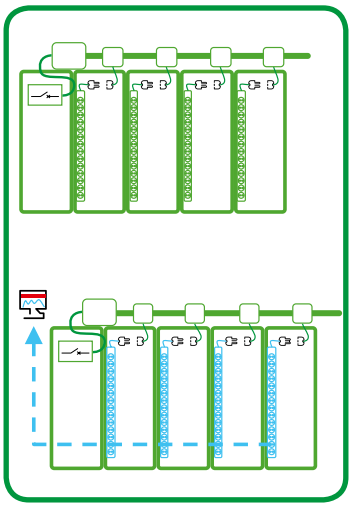	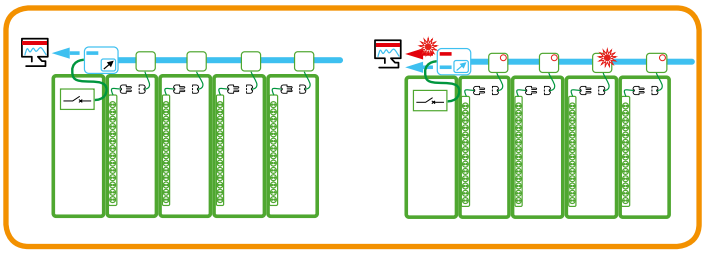	
2 Monitored rack PDU		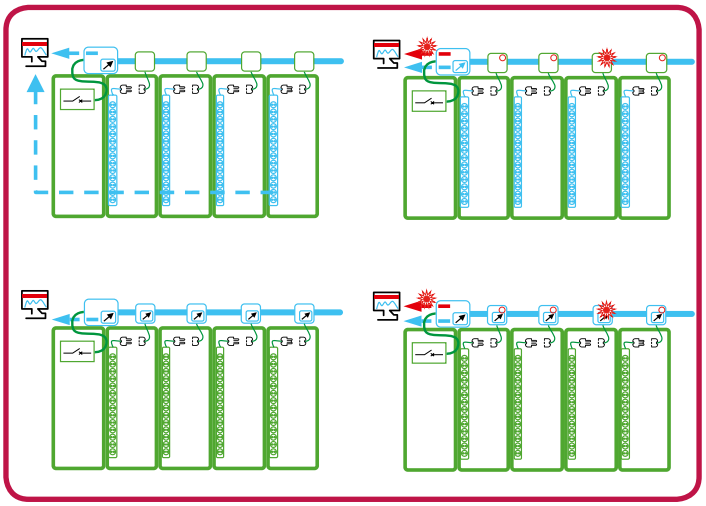	
3 Rack monitored by energy meter			

Legend:

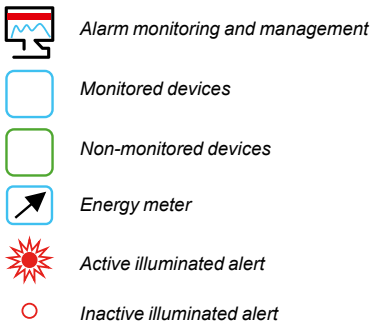

Classic Pack
Presentation

> The Canalis design makes it simple and easy to add racks, without disrupting the existing installation.

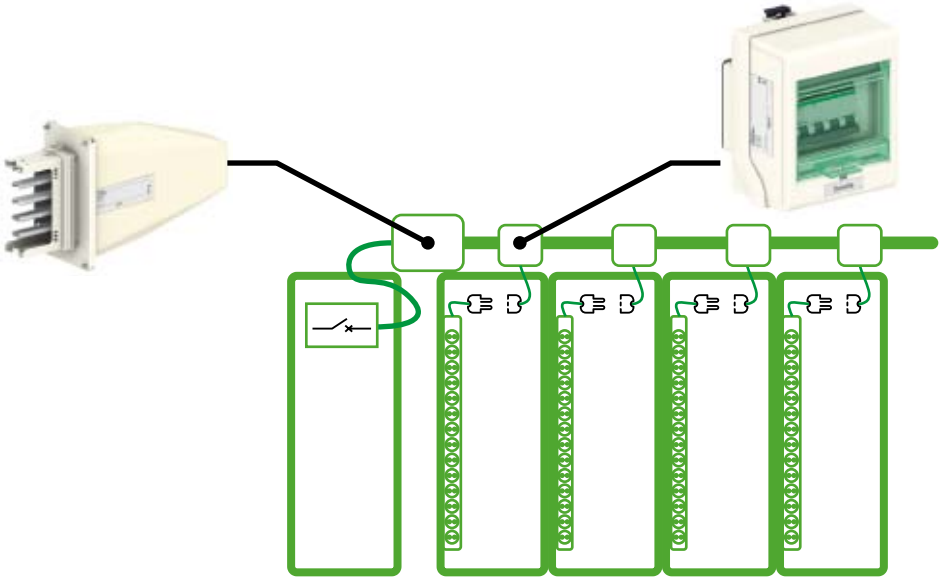

Functions available:

> Protection of Canalis lines by Compact NSX circuit-breakers.

> Protection of racks by circuit-breakers from the Acti 9 range (single-phase or 3-phase 16 A, 32 A or 63 A) with or without differential protection (30 mA).

> Rack feed units are equipped with front panel-mounted sockets or wandering sockets (IEC 309).

Architecture diagram:

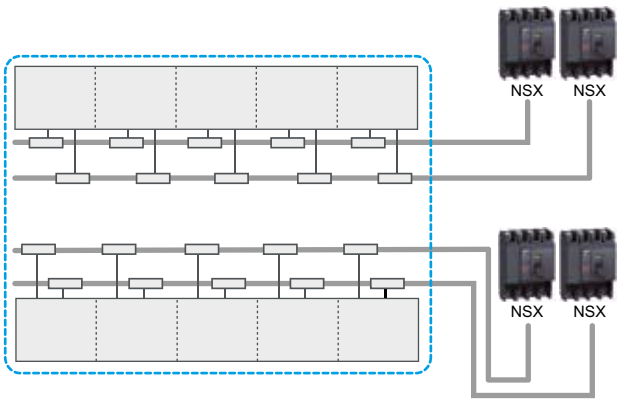

Compact NSX circuit-breakers can be fitted with Micrologic power meter.

Monitored rack PDUs allow you to control the electrical distribution in racks.

Tripped circuit-breakers can be indicated by an indicator light on the tap-off unit.

Line Pack
Presentation

> Line capacity is managed in real time. Information is available on the monitoring system.

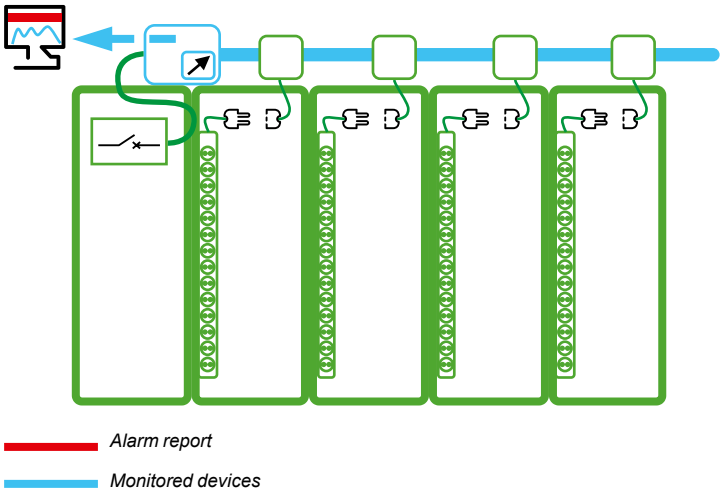

Functions available:

> Protection of Canalis lines by Compact NSX circuit-breakers.

> Protection of racks by circuit-breakers from the Acti 9 range (single-phase or 3-phase 16 A, 32 A or 63 A) with or without differential protection (30 mA).

> Rack feed units are equipped with front panel-mounted sockets or wander sockets (IEC 309).

> For the line, measures power rate, phase balancing, THD, power factor, voltage, current, active and reactive power and consumption.

> Alarm generation on load rate (current and power).

Architecture diagram:

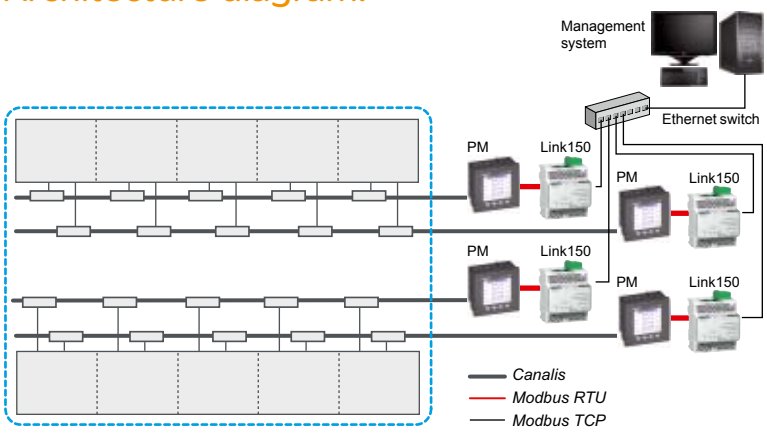

The power meters are used to manage the load rate on each line.

Tripped circuit-breakers can be indicated by an indicator light at the head of the line and/or on the tap-off unit.

Advanced Pack
Presentation

The server room is fully monitored, from line to racks.

Monitoring of racks by monitored multi-socket strip (rack PDU)

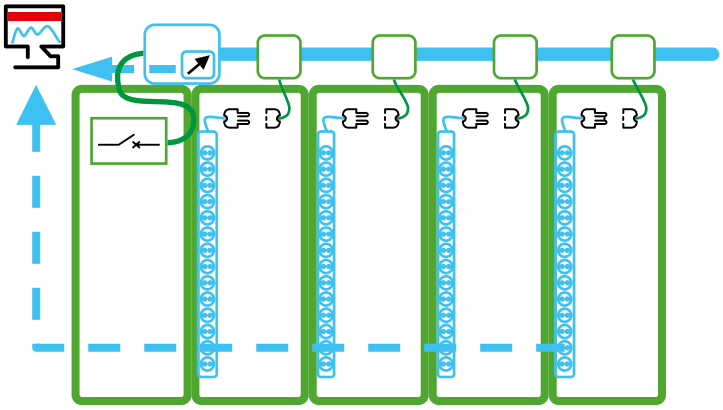

Functions available:

> Protection of Canalis lines by Compact NSX circuit-breakers.

> Protection of racks by circuit-breakers from the Acti 9 range (single-phase or 3-phase 16 A, 32 A or 63 A) with or without differential protection (30 mA).

> Rack feed units are equipped with front panel-mounted sockets or wander sockets (IEC 309).

> For line and racks, measures power rate, phase balancing, THD, power factor, voltage, current, active and reactive power and consumption.

> Control of electrical distribution of racks with monitored PDU racks.

> Alarm generation on load rate (current and power).

Tripped circuit-breakers can be indicated by an indicator light on the tap-off unit.

Monitored rack PDUs allow you to control the electrical distribution of the racks.

Architecture diagram:

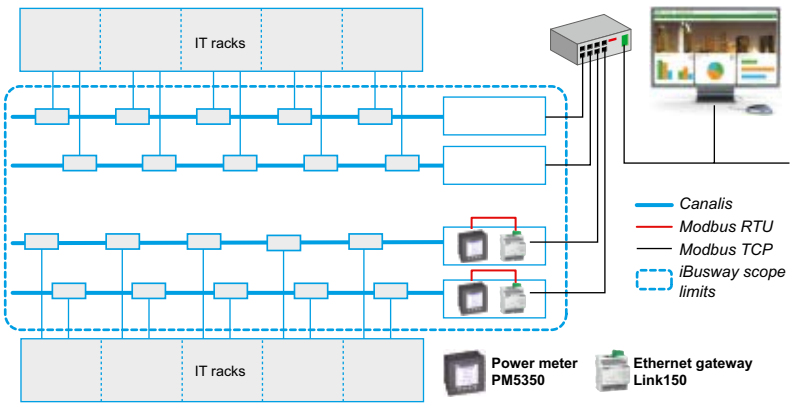

Advanced Pack
Presentation

> Racks monitored by a energy meter in tap-off units

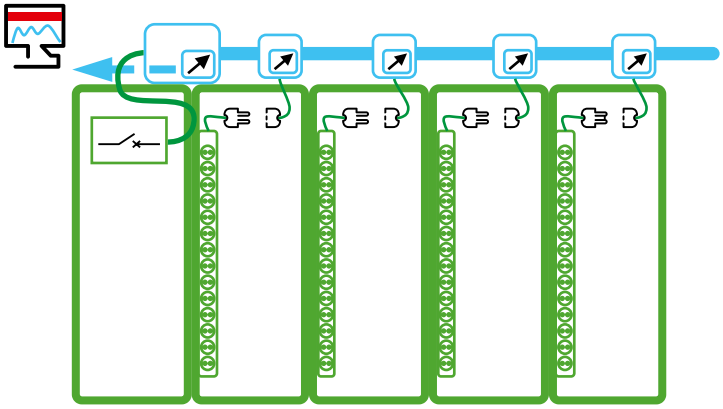

StruxureWare Power Monitoring and StruxureWare Data Center Expert are software packages that simplify the management of data centers to maximize availability and energy efficiency.

Link150 communication units collect data from the rack power supply units. The number of Link150 units required will depend on expected performance.

The Link150 installed in the feed unit also collects data.

Functions available:

> Protection of Canalis lines by Compact NSX circuit-breakers.

> Protection of racks by circuit-breakers from the Acti 9 range (single-phase or 3-phase 16 A, 32 A or 63 A) with or without differential protection (30 mA).

> Rack feed units are equipped with front panel-mounted sockets or wander sockets (IEC 309).

> For line and racks, measures power rate, phase balancing, power factor, voltage, current, active and reactive power and consumption.

> Tripping alarms.

Compact NSX circuit-breakers can be fitted with Micrologic power meter.

Tripped circuit-breakers can be indicated by an indicator light on the tap-off unit.

Architecture diagram:

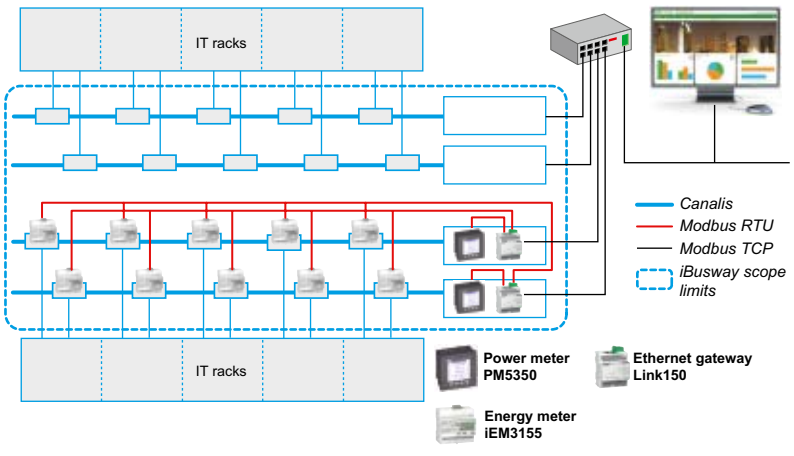

Advanced Pack
Tap-off unit metering system with iEM3155

Tap-off units

PB115540

DD230902

32 A connector for modular equipment
This connector allows the mounting of modular devices of up to 5 modules.
Its front face window lets you control and view the switchgear status. A transparent flap guarantees window tightness.

DD230903

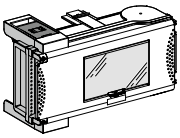

Disconnector unit for modular equipment
Its front face window lets you control and view the switchgear status. A transparent flap guarantees window tightness.
There are two tap-off ratings:
- 63 A for 8 modules.
- 100 A for 12 modules.

DD230904

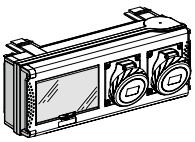

32 A connector with power sockets
Equipped with 2 Pratika power sockets, this connector has an 8-module capacity.

DD230905

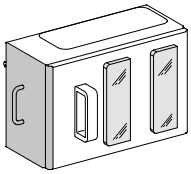

160 A disconnector unit
This unit can be equipped with wander sockets or panel mountings.
It consists of a moving support that accommodates the modular equipment with up to 24 modules.

Advanced Pack
Tap-off unit metering system with iEM3155

The Canalis tap-off unit consists of:

PB104476-35

PB104474-35

Auxiliary contact
The auxiliary contacts allow remote indication of circuit-breaker status.
- ■ iSD auxiliary contact: indicates tripping on circuit-breaker fault.
- ■ iOF auxiliary contact: indicates circuit-breaker open or closed position.

A test button on the front face of the auxiliary contacts simulates faults without needing to use the circuit-breaker.

PB104437-35

Acti 9 iC60 circuit-breaker, C and D curves
Circuit overcurrent protection and control (general applications).
The magnetic releases act between 5 and 10 In in C curve and between 10 and 20 In in D curve.

PB104466-35

A SI type Acti 9 Vigi iC60 residual current module
Ideally suited for operation in environments with:
- ■ High nuisance tripping risks: lightning strokes at close intervals, IT earthing system, presence of electronic ballasts, presence of switchgear incorporating interference suppression filters of the lighting, micro-computing type, etc.
- ■ Blinding sources:
- □ presence of harmonics or rejection of high frequencies,
- □ presence of DC components: diodes, diode bridges, switch mode power supplies, etc.

Its use depends on applicable legislation in your country.

PB108418-35

iEM3155 energy meter
The energy meter provide information on voltage, current, power, energy, etc. This information is transmitted to the Management System via Modbus TCP communication through a gateway.

Advanced Pack

Line metering system with power meter

DB405579

DB405238

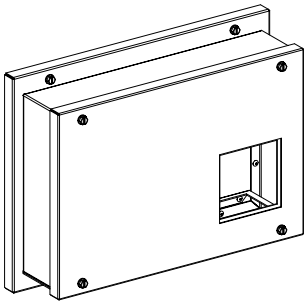

Metering box for Canalis feed unit

Measurement is performed by a power meter visible on the front of the feed unit.
The analog measurement system consists of current transformers and a iEM3155 for monitoring the electrical values of the busbar trunking lines.
Communication with the monitoring systems is via an ethernet gateway Link150 on Modbus TCP.

DD230677

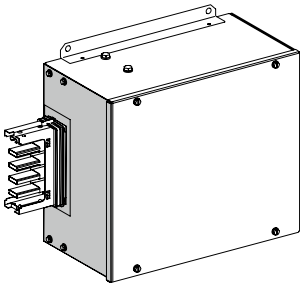

Canalis feed unit

It supplies power to a KS line via cables or directly from the switchboard busbars.

Power is supplied at the left or right-hand end of a line (end feed unit).

PB115427

Link150 ethernet gateway

The Link150 gateway provides fast, reliable ethernet connectivity in the most demanding applications, from a single building to a multi-site enterprise.
This gateway supports meters, monitors, protective relays, trip units, motor controls and other devices that need to communicate data quickly and efficient.

Advanced Pack
Line metering system with power meter

Current transformers (CTs)
Ip/5A ratio current transformers deliver a current of 0 to 5 A at the secondary that is proportional to the current measured at the primary.

ABL8MEM24003

Power supply
The 24 V DC supply powers the ethernet gateway Link150.
Its simple and proven technology, housed in a compact unit, guarantees significantly longer service life.

2P iC60N circuit-breaker

4P iC60N circuit-breaker

iC60N circuit-breaker
Circuit overcurrent protection and control (general applications).
The magnetic releases act between 5 and 10 In in C curve and between 10 and 20 In in D curve.

How to install a local triping alert?

Without power meter inside the tap-off units

This solution informs you of a fault in a row by an indicator light at the head of the line. This alert can be transmitted to the monitoring system.

An indicator light on each tap-off unit also allows you to quickly identify the faulty rack.

Remote alert on feed unit

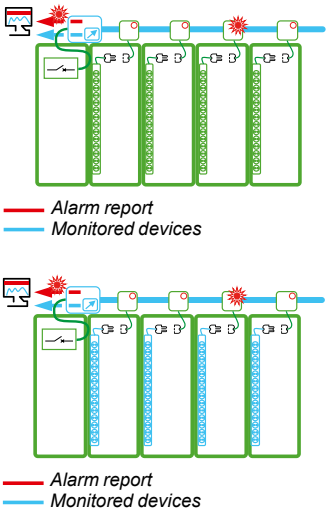

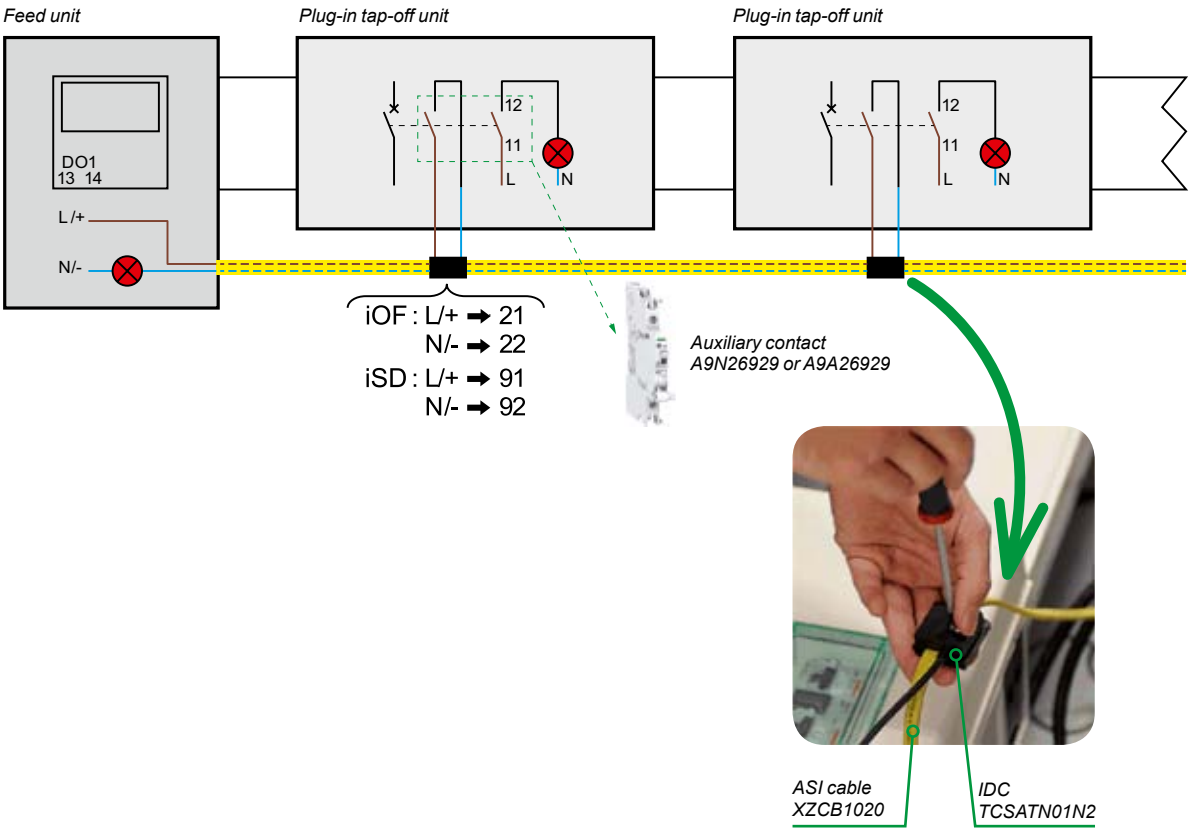

To install a local trip alert, replace the auxiliary OF or SD contacts with a dual SD/OF contact.
The circuit-breaker auxiliary contacts must be wired in parallel both for transmission to the feed unit and for the local indicator light.

How to install a local triping alert?

With power meter inside the tap-off units

Alerts are transmitted to the central monitoring system.
However, an indicator light at the heads of lines and on the tap-off units allows you to quickly locate the faulty rack.

Local alert + remote alert on feed unit

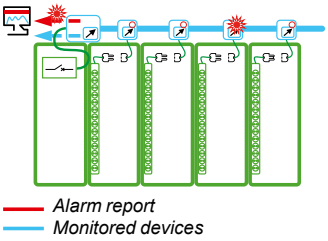

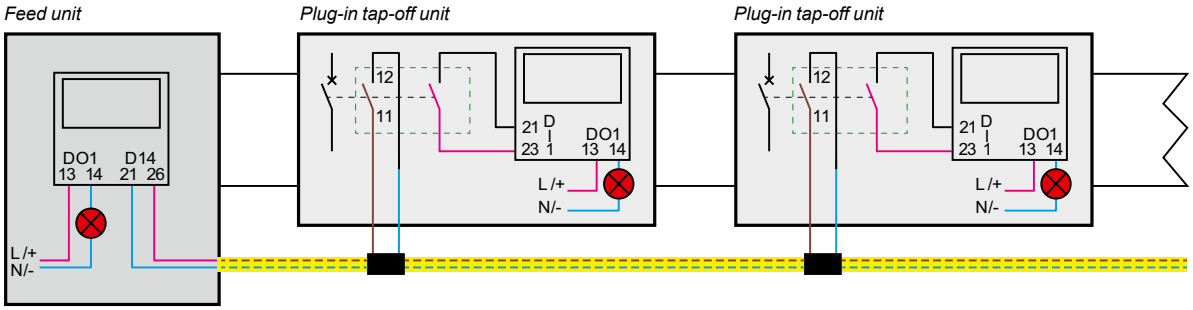

Local alert only

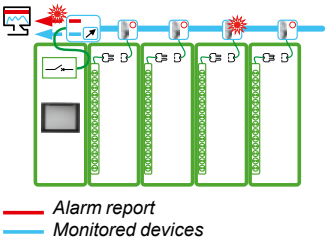

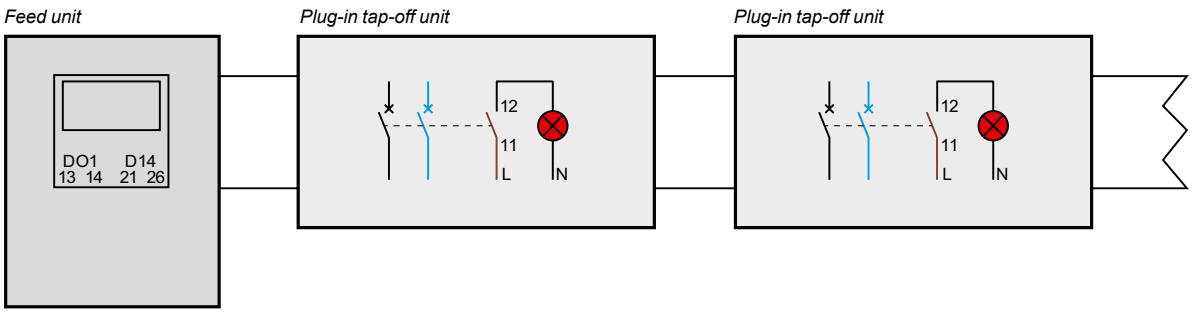

How to install Canalis lines?

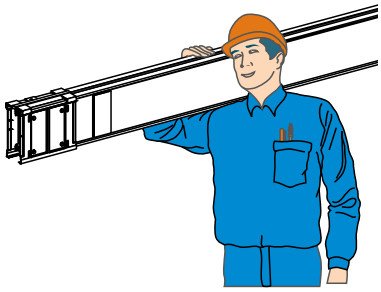

The aluminum conductors of the Canalis prefabricated busbar trunking make it light weight and easy to handle.
The light weight of the Canalis KS simplifies installation and considerably reduces installation time. You thus need fewer people and less equipment to carry out your projects.

The silver-plated copper contacts based on Bi-metal technology guarantee outstanding life performance.

Organization of the redundancy system

PD240320

The server racks are supplied with power by Canalis prefabricated busbar trunking systems.
We offer a variety of installation types to meet your needs.

Supply example with 2 Canalis lines

DB405923

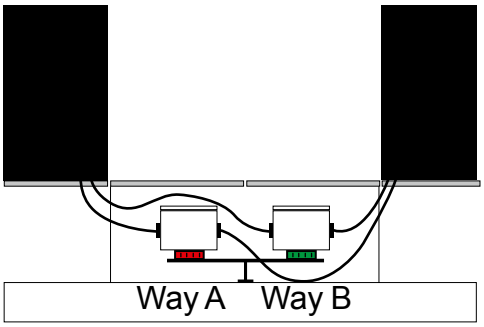

This configuration shows a supply with 2 Canalis lines, each line supplying 2 racks by means of tap-off units.
This type of architecture is recommended for:
■ Rack supply safety. Each line distributes at most 50% of the power required for rack operation. When a supply fault occurs on a Canalis line, the necessary load is supplied by the remaining line.

DD230610_EN

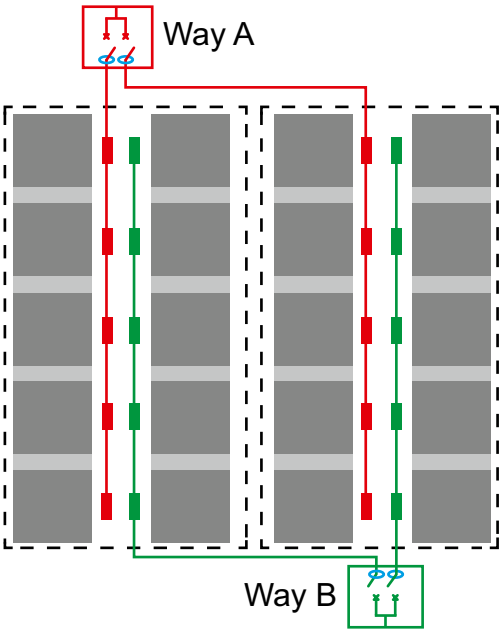

DD230611_EN

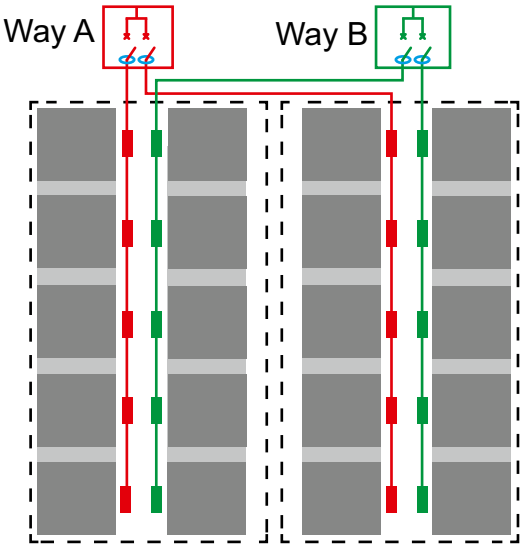

Supply with 4 Canalis lines

DD230612_EN

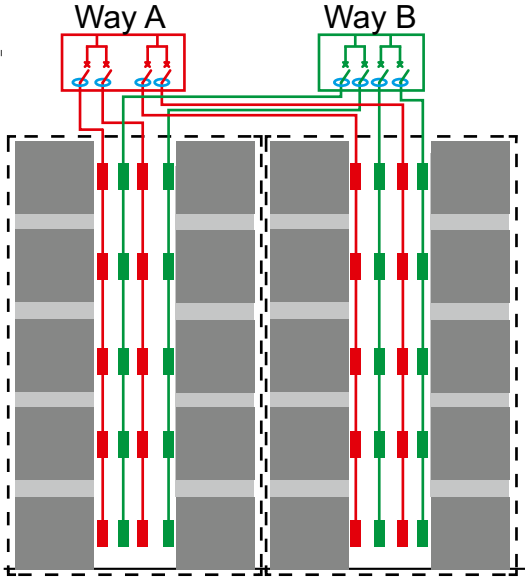

DB405924

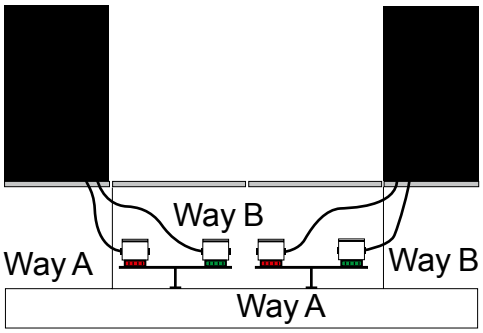

This configuration shows a supply with 4 Canalis lines, each line supplying 2 racks by means of tap-off units.
This type of architecture is recommended for:
■ Rack supply safety. Each line distributes at most 50% of the power required for rack PDU operation.
■ An increased number of tap-off outlets, allowing utilization of tap-off units with fewer feeders.

Organization of the redundancy system

PD240337

Server

PD240338

Rack PDU

A Data Center consists of racks. Racks contain one or more server servers supplied by one or more rack Power Distribution Unit (rack PDU).

The rack PDU are supplied simultaneously by 2 lines, each with a maximum load of 50%.

Should one line fail, the entire load is then supported by the other line.

The size of the tap-off units used depends on several criteria:
- The number of feeders.
- Feeder power.
- Need for residual current protection.
- Whether or not metering is required.

The space available to install the Canalis busbar trunkings may limit use of certain tap-off units.

Rack supply example

DD230626_EN

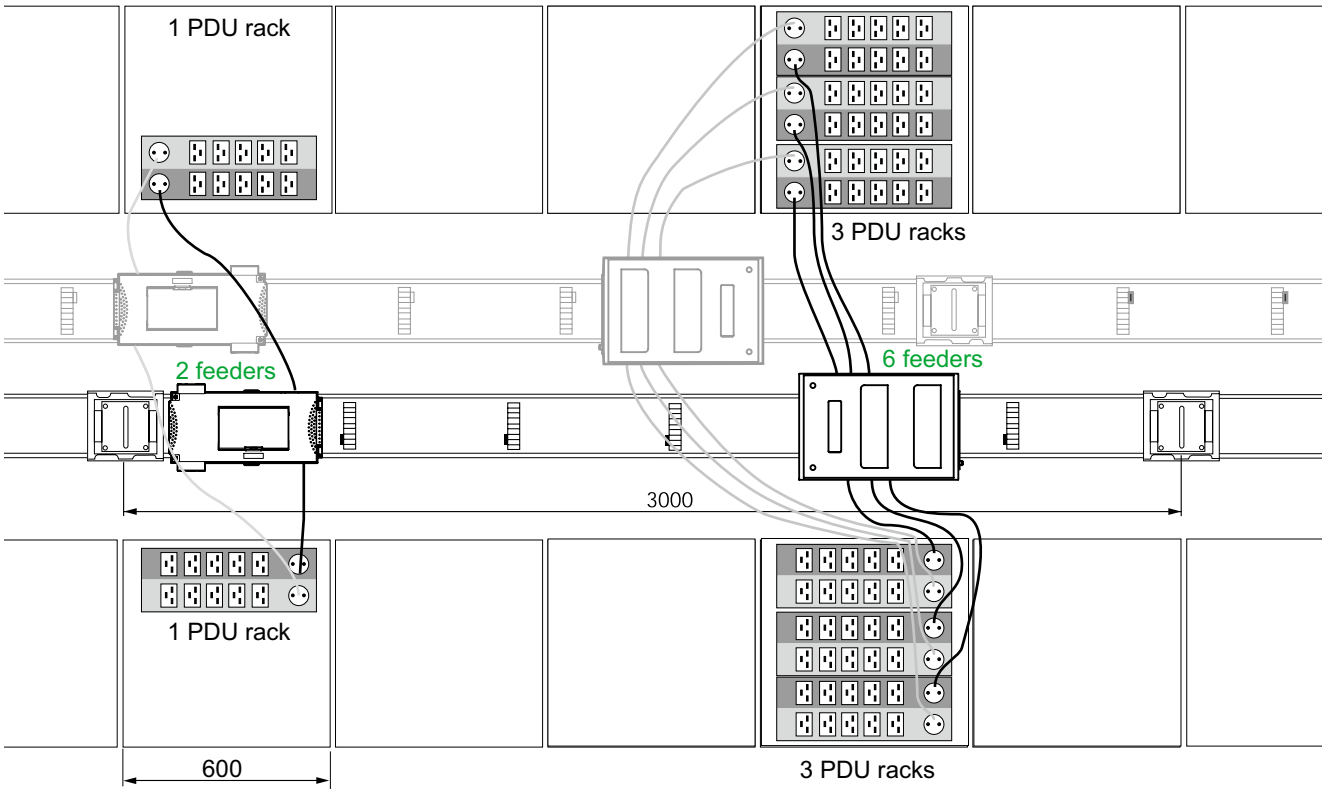

Rack supply with busbar trunking in a raised floor

The power distribution line can be installed either overhead or in a raised floor using a suitable fastening mechanism.

If installed in a raised floor, the distribution system is placed in the aisle located between two rows of racks.

The width of this aisle is normally equal to two 60 cm slabs, i.e. 1.2 meters.

In this configuration, the busbar trunking can be installed:
- Flat.
- Edgewise.

Example of flat installation

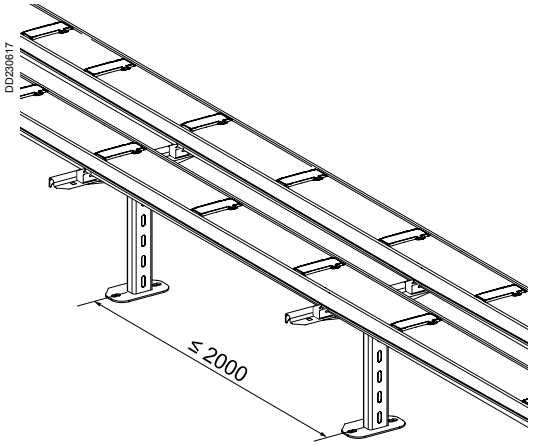

Example of edgewise installation

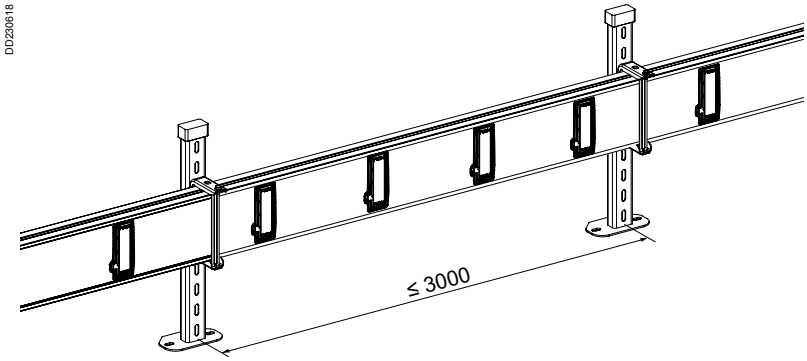

Whichever installation configuration is chosen, when installing distribution components in a raised floor, allowance must be made for the overall dimensions of the line and tap-off units making up your installation.

Rack supply with busbar trunking in a raised floor

PD240333

Flat configuration

Case 1

DB405925

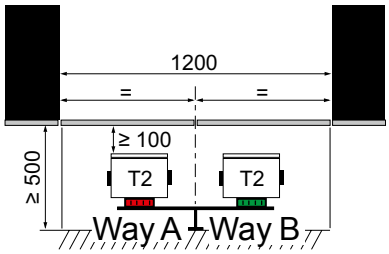

Case 2

DB405926

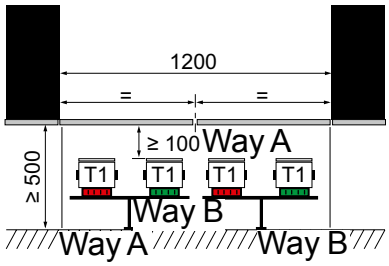

T1: Small unit
T2: Large unit

The following table shows how tap-off units can be used according to how your network is set up.

	KSB32CM55	KSB32CP	KSB63SM●8	KSB100SM●8	KSB160SM●24
Case 1	■	■	■	■	■
Case 2	■	■	■	■	

For more details on tap-off units, refer to page 32 - 33.

Edgewise configuration

Case 1

PD240334

DB405927

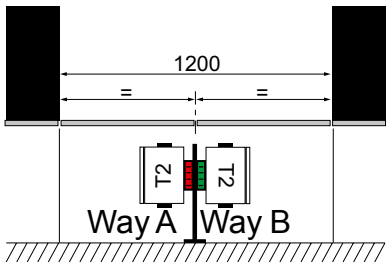

Case 2

DB405928

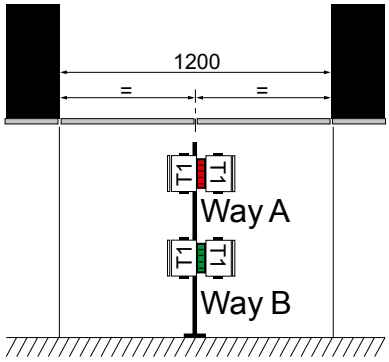

T1: Small unit
T2: Large unit

Caution: when installing the tap-off unit, allow for the necessary space at the cable outlets, cable glands and sockets.

Rack supply with busbar trunking in an overhead installation

DD230623

In an overhead installation, the distribution system is installed above the racks and only in the edgewise configuration.

Edgewise configuration

DB405481

DB405930

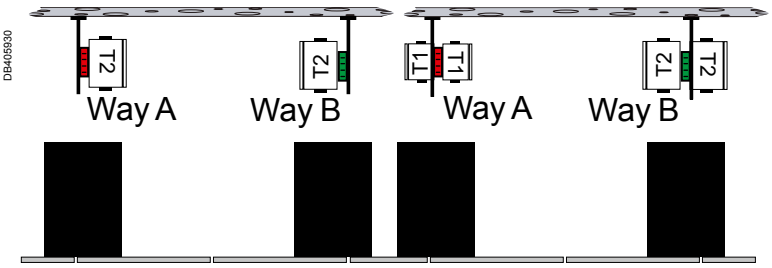

DB405480

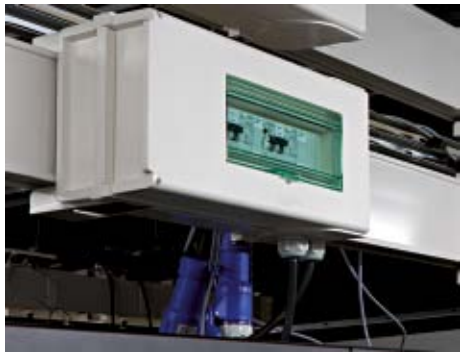

DB405931

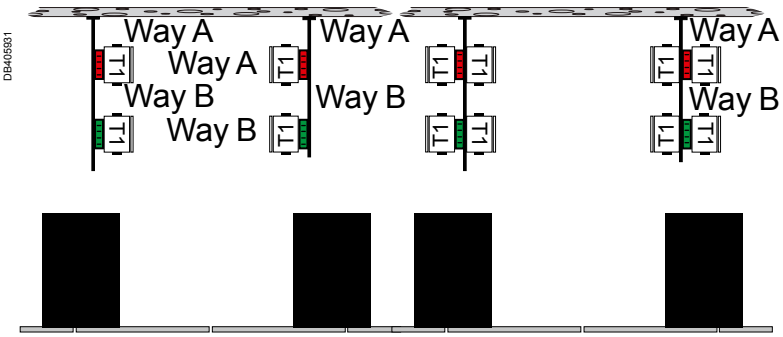

To validate your choice, please refer to the tap-off unit selection pages 32 - 33 to confirm their applications according to the dimensional requirements of your installation.

Caution: When installing the tap-off units, allow for the necessary space at the cable outlets, cable glands and sockets.

Positioning of feed units by cable

Feed unit

Allowance must be made for the power pack when installing Canalis lines.

There are two possible configurations for flat installation:

- Opposite direction installation.
- Same direction installation.

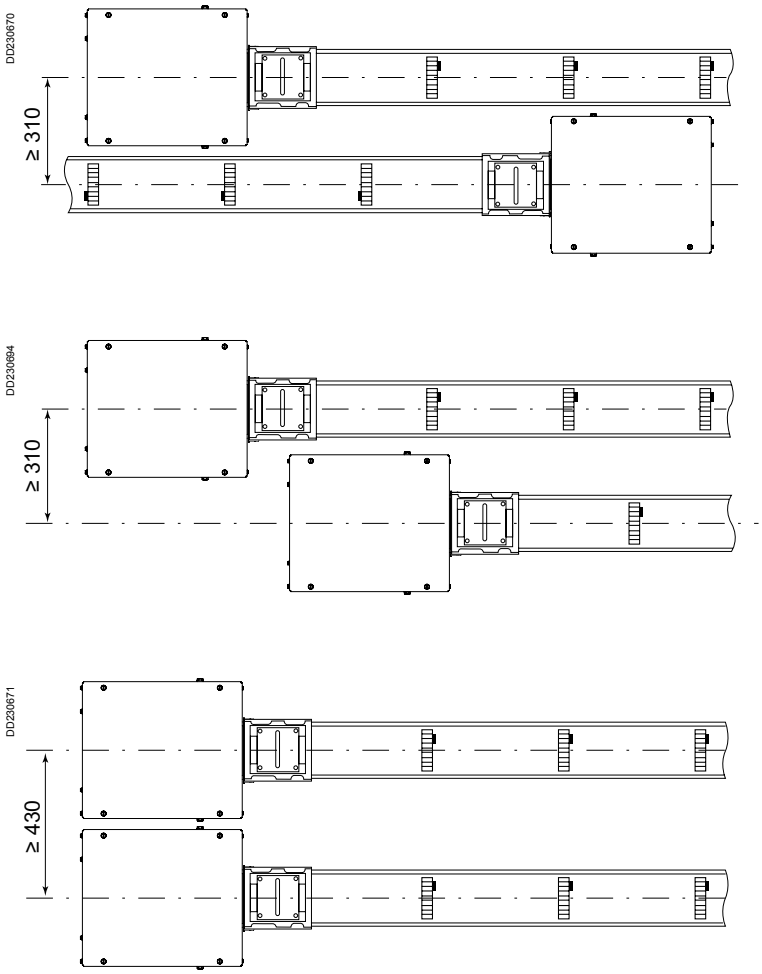

Tap-off unit positioning

KSB32CM55 connector

According to the direction in which you install the Canalis lines, a minimum centre distance makes cable outlets possible.

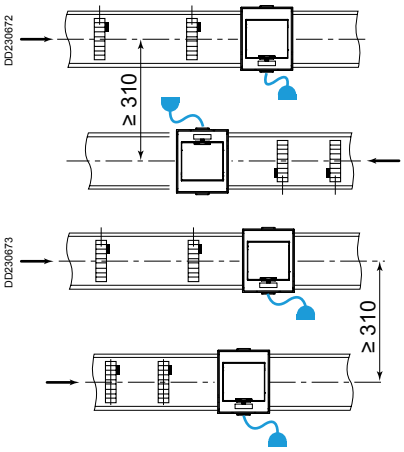

KSB●SM● disconnector

A minimum centre distance is necessary for cable outlets.

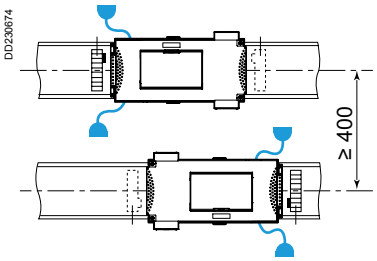

KSB160SM●24 disconnector

A minimum centre distance is necessary for cable outlets.

There are two possible configurations:

- With panel mountings.
- With wander sockets.

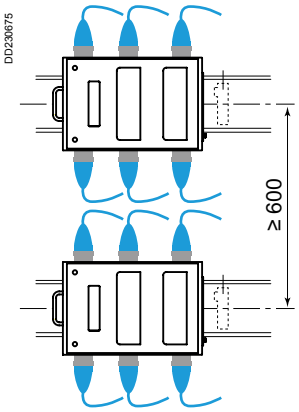

Panel mountings

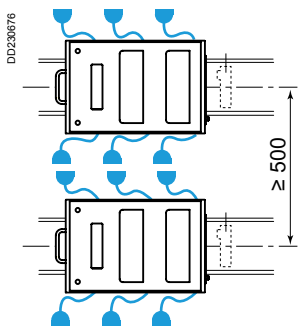

Wander sockets

Which tap-off unit do I need?

The number of tap-off units presented below corresponds to an installation on a single side of the Canalis prefabricated busbar trunking system. This number is doubled for installations in which the tap-off units can be mounted on both sides.

Tap-off with wander sockets

Without vigi

Nb of poles	Nb of sockets		Rating	Protected circuits	Without measurement		With measurement	
					Module (18 mm)	Canalis box	Module (18 mm)	Canalis box
1P+N	1	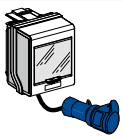	16 or 32	P	1	**KSB32CM55**	6.5	**KSB63SM58**
				P+N	2	**KSB32CM55**	7.5	**KSB63SM48**
	2	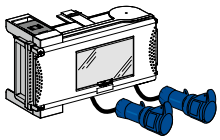	16 or 32	P	2	**KSB63SM58**	8	**KSB63SM58**
				P+N	4	**KSB63SM48**	10	**KSB100SM412**
	3	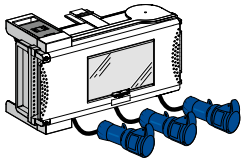	16 or 32	P	3	**KSB100SM512**	9.5	**KSB100SM512**
				P+N	6	**KSB100SM412**	12.5	**KSB100SM412** (1)
3P+N	1	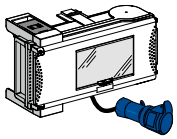	16 or 32	3P	3	**KSB32CM55**	8.5	**KSB100SM512**
			63			**KSB63SM58**		
			16	3P+N	4	**KSB32CM55**	9.5	**KSB100SM412**
			32					
			63			**KSB63SM48**		**KSB100SM412**
	2	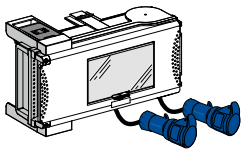	16 or 32	3P	6	**KSB63SM58**	12	**KSB100SM512**
			63			**KSB63SM58**		
			16	3P+N	8	**KSB63SM48**	14	Metallic box
			32					
			63			**KSB63SM48**		Metallic box

Tap-off with panel mountings

Without vigi

Nb of poles	Nb of sockets		Rating	Protected circuits	Without measurement		With measurement	
					Module (18 mm)	Canalis box	Module (18 mm)	Canalis box
1P+N	1	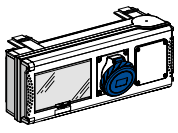	16 or 32	P	1	**KSB32CP**	6.5	**KSB32CP**
				P+N	2	**KSB32CP**	7.5	**KSB32CP**
	2	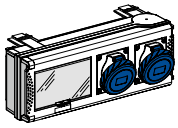	16 or 32	P	2	**KSB32CP**	8	**KSB32CP**
				P+N	4	**KSB32CP**	10	Metallic box
3P+N	1	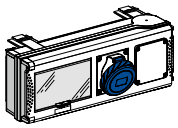	16 or 32	P	3	**KSB32CP**	8.5	**KSB32CP** (1)
			16	3P+N	4	**KSB32CP**	9.5	Metallic box
			32					
	2	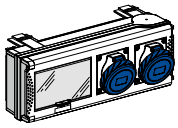		P	6	Metallic box	12	Metallic box
			16	3P+N	8	Metallic box	14	Metallic box
			32					

Which tap-off unit do I need?

With vigi				
	Without measurement		With measurement	
	Module (18 mm)	Canalis box	Module (18 mm)	Canalis box
	N/A	N/A	N/A	N/A
	4	**KSB32CM55**	9.5	**KSB100SM412**
	N/A	N/A	N/A	N/A
	8	**KSB63SM48**	14	Metallic box
	N/A	N/A	N/A	N/A
	12	**KSB100SM412**	18.5	Metallic box
	N/A	N/A	N/A	N/A
	7	**KSB100SM412**	12.5	**KSB100SM412** (1)
	7.5	**KSB100SM412**	13	Metallic box
	7.5	**KSB100SM412**	13	Metallic box
	N/A	N/A	N/A	N/A
	14	Metallic box	20	Metallic box
	15	Metallic box	21	Metallic box
	15	Metallic box	21	Metallic box

With vigi				
	Without measurement		With measurement	
	Module (18 mm)	Canalis box	Module (18 mm)	Canalis box
	N/A	N/A	N/A	N/A
	3.5	**KSB32CP**	9	Metallic box
	N/A	N/A	N/A	N/A
	7	**KSB32CP**	12	Metallic box
	N/A	N/A	N/A	N/A
	7	Metallic box	12.5	Metallic box
	7.5		13	
	N/A	N/A	N/A	N/A
	14	Metallic box	20	Metallic box
	15		21	

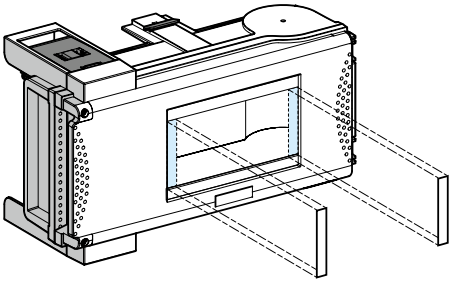

(1) *The standard 12 modules opening must be enlarged by cutting off the 2 plastic strips.*

Tap-off unit
With wander socket

Connector

Disconnection by unplugging the connector.

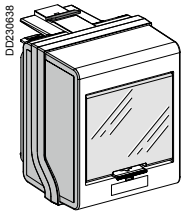

KSB32CM55

Earthing system	Busbar trunking	TT-TNS-TNC-IT(1)
	Tap-off	TT-TNS-TNS-IT(1)
Tap-off polarity		3L + N + PE(2)

Tap-off diagram
(e.g. circuit-breaker protection)

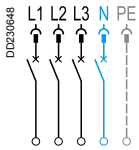

Rating (A)	Number of 9 mm mod.	Number of 18 mm mod.(3)	Connection	Max.cross-section (mm²) Flexible	Max.cross-section (mm²) Rigid	Cable gland(4) (not supplied)	Part number	Weight (kg)
32	10	5	Pre-wired	6	10	ISO 32 max.	**KSB32CM55**	0.60

(1) *The neutral must be protected or not distributed (3L + PE) for the IT earthing system.*
(2) *Also suitable for 3L + PE tap-off (N not distributed, IT also possible).*
(3) *Supplied with blanking plate (1x5 divisible).*
(4) *Max. diameter for a multipole cable.*

KSB32CM55

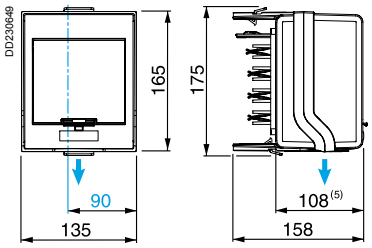

Cable outlet
Tap-off outlet axis

(5) *Surface-mounting dimension*

Disconnector unit

Disconnection by opening the tap-off unit cover

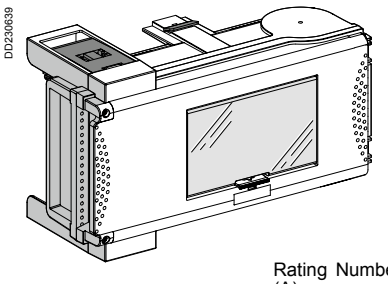

KSB63SM●8,
KSB100SM●12

Earthing system	Busbar trunking	TT-TNS-TNC-IT(1)	TNC
	Tap-off	TT-TNS-TNS-IT(1)	TNC
Tap-off polarity		3L + N + PE(2)	3L + PEN

Tap-off diagram
(e.g. circuit-breaker protection)

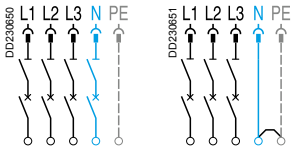

Rating (A)	Number of 9 mm mod.	Number of 18 mm mod.(3)	Connection	Max.cross-section (mm²) Flexible	Max.cross-section (mm²) Rigid	Cable gland(4) (not supplied)	Part number	Part number	Weight (kg)
63	16	8	Lugs	16	16	ISO 50 max.	**KSB63SM48**	**KSB63SM58**	2.40
100	24	12	Lugs	35	35	ISO 63 max.	**KSB100SM412**	**KSB100SM512**	5.00

(1) *The neutral must be protected or not distributed (3L + PE) for the IT earthing system.*
(2) *Also suitable for tap-off unit 3L + PE (N not distributed).*
(3) *Supplied with blanking plate (1x5 divisible (KSB63SM●●) or 2x5 divisible (KSB100SM●●)).*
(4) *Max. diameter for a multipole cable.*

KSB63SM●8, KSB100SM●12

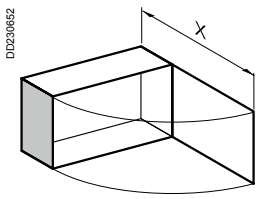

X = 432.5 (KSB63SM●8)
X = 545.5 (KSB100SM●12)

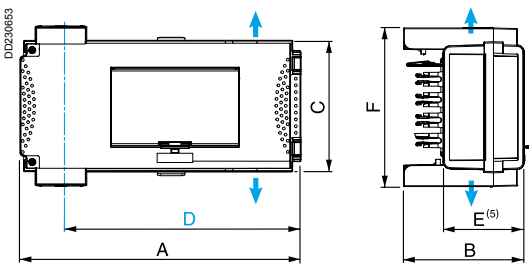

Dim.	63 A	100 A
A	357	444
B	158	183
C	167	202
D	309	397
E	108	133
F	202	220

Cable outlet
Tap-off outlet axis

(5) *Surface-mounting dimension*

Tap-off unit
With wander socket

DD230656

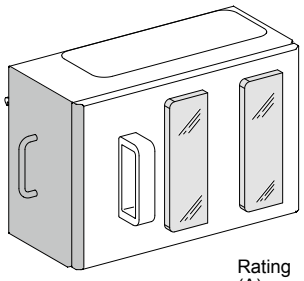

KSB160SM424

Disconnector unit

Disconnection by opening the tap-off unit cover

Earthing system	Busbar trunking	TT-TNS-TNC-IT(1)	TNC
	Tap-off	TT-TNS-TNS-IT(1)	TNC
Tap-off polarity		3L + N + PE(2)	3L + PEN

Tap-off diagram (e.g. circuit-breaker protection)

DD230650

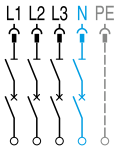

DD230651

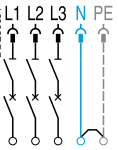

Rating (A)	Number of 9 mm mod.	Number of 18 mm mod.(3)	Connection	Max.cross-section (mm²) Flexible	Max.cross-section (mm²) Rigid	Cable gland(4) (not supplied)	Part number	Part number	Weight (kg)
160	48	24	Lugs	16²	Not used	ISO 50 max.	**KSB160SM424**	**KSB160SM524**	10.69

(1) *The neutral must be protected or not distributed (3L + PE) for the IT earthing system.*

(2) *Also suitable for tap-off unit 3L + PE (N not distributed).*

(3) *Supplied with blanking plate (2 rows of 12 modules).*

(4) *Max. diameter for a multipole cable.*

DD230652

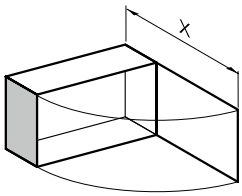

X = 650

KSB160SM424

DD230657

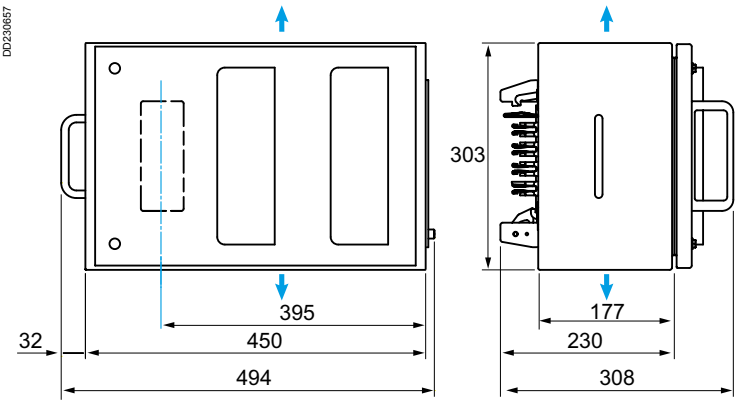

Cable outlet

Tap-off outlet axis

Tap-off unit
With panel mounting

Connector for power socket
Disconnection by plug-out

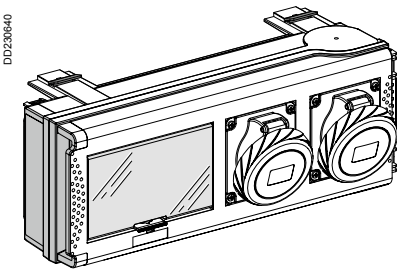
DD230640

KSB32CP

Earthing system	Busbar trunking	TT-TNS-TNC(1)
	Tap-off	TT-TNS-TNS(1)
Tap-off polarity		3L + N + PE
Tap-off diagram (e.g. circuit-breaker protection)	The cabling for this tap-off unit depends on the power sockets used	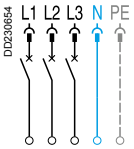

Rating (A)	Number of 9 mm mod.	Number of 18 mm mod. (2)	Device	Current (A)	Voltage (V)	Part number	Weight (kg)
32	16	8	Can be equipped with 2 Pratika industrial sockets	16/32	220/380	**KSB32CP**	2.70

***(1)** The neutral must be protected or not distributed (3L + PE) for the IT earthing system.*

***(2)** Supplied with blanking plate (1x5 divisible).*

KSB32CP●●●

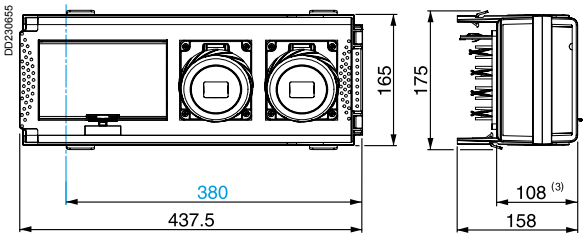

Tap-off outlet axis

***(3)** Surface-mounting dimension*

PD240347

PKY●●F4●●

PD240348

PKY●●F7●●

PD240349

PKY●●F●●●

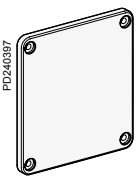
PD240397

13137

Angled socket

Nominal current (A)	Nominal voltage (V AC)	Number of poles	Dimensions (W x H in mm)	Part number
IP44				
16	200-250	2P + T	65 x 85	**PKY16F423**
	380-415	3P + N + T	90 x 100	**PKY16F435**
32	200-250	2P + T	90 x 100	**PKY32F423**
	380-415	3P + N + T	90 x 100	**PKY32F435**
IP67				
16	200-250	2P + T	65 x 85	**PKY16F723**
	380-415	3P + N + T	90 x 100	**PKY16F735**
32	200-250	2P + T	90 x 100	**PKY32F723**
	380-415	3P + N + T	90 x 100	**PKY32F735**
63	200-250	2P + T	100 x 107	**81278**
	380-415	3P + N + T	100 x 107	**81283**

Wander socket

Nominal current (A)	Nominal voltage (V AC)	Number of poles	Part number
IP44			
16	200-250	2P + T	**PKY16M423**
	380-415	3P + N + T	**PKY16M435**
32	200-250	2P + T	**PKY32M423**
	380-415	3P + N + T	**PKY32M435**
IP67			
16	200-250	2P + T	**PKY16M723**
	380-415	3P + N + T	**PKY16M735**
32	200-250	2P + T	**PKY32M723**
	380-415	3P + N + T	**PKY32M735**
63	200-250	2P + T	**81478**
	380-415	3P + N + T	**81483**

Accessory

Device	Quantity	Part number
Socket blanking plate	x1	**13137**

Tap-off unit
Metering tap-off unit with iEM3155

PB115541

Part numbers to use for installing a metering tap-off unit with iEM3155:

- Empty tap-off unit.
- Window for modular equipment (IP65).
- Current transformer.
- iC60N circuit-breaker.

DD230639

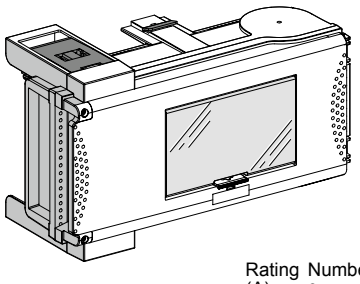

KSB63SM●8,
KSB100SM●12

Disconnector unit

Disconnection by opening the tap-off unit cover

Earthing system	Busbar trunking	TT-TNS-TNC-IT(1)	TNC
	Tap-off	TT-TNS-TNS-IT(1)	TNC
Tap-off polarity		3L + N + PE(2)	3L + PEN

Tap-off diagram
(e.g. circuit-breaker protection)

DD230650

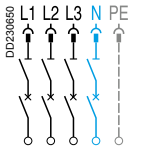

DD230651

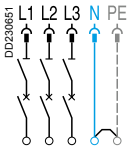

Rating (A)	Number of 9 mm mod.	Number of 18 mm mod. (3)	Connection	Max.cross-section (mm²) Flexible	Max.cross-section (mm²) Rigid	Cable gland(4) (not supplied)	Part number	Part number	Weight (kg)
63	16	8	Lugs	16	16	ISO 50 max.	**KSB63SM48**	**KSB63SM58**	2.40
100	24	12	Lugs	35	35	ISO 63 max.	**KSB100SM412**	**KSB100SM512**	5.00

(1) *The neutral must be protected or not distributed (3L + PE) for the IT earthing system.*

(2) *Also suitable for tap-off unit 3L + PE (N not distributed).*

(3) *Supplied with blanking plate (1x5 divisible (KSB63SM●●) or 2x5 divisible (KSB100SM●●)).*

(4) *Max. diameter for a multipole cable.*

PB108418-35

A9MEM3155

iEM3155 energy meter

Electrical characteristics	
Part number	**A9MEM3155**
Control power	Self-powered meters
Voltage measurement	50 to 330 V (ph-N) 80 to 570 V (Ph-Ph) up to 1 MV AC (ext VT)
Current	Direct measurement up to 63 A without CTs
Accuracy	Class 1
Width	Compact, 5 modules
Communication	Modbus
Standards	Compliance with IEC 61557-12, IEC 62053-21/22, IEC 62053-23, EN 50470-3
Value measurement	Active energy, reactive energy, active power Reactive power, currents and voltages, overload alarm
MID compliant (selected models) providing certified accuracy and data security	

DB405841-37

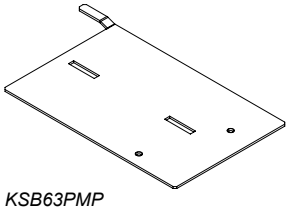

KSB63PMP

Mounting plate

Designation	Rating	Tap-off unit part numbers	Mounting	Part number
For tap-off units	50 A	**KSB50SV4**	Fastening bracket for Power Monitoring devices	**KSB63PMP**
		KSB50SV5		

Protection devices
Compatible with all solutions

PB104437-35

2P iC60N circuit-breaker

PB104450-35

4P iC60N circuit-breaker

Circuit-breaker

iC60N			
Rating	**Curve**	**Number of poles**	**Width in 9 mm mod.**
16 A, 32 A, 63 A	C	2	4
	D	4	8

PB104476-35

A9A26927

PB104474-35

A9A26924

PB104475-35

A9A26929

PB100625_SE-35b

A9N26929

Auxiliary contact

iSD (fault signal)		
Breaking capacity	**Width in 9 mm mod.**	**Part number**
3 A at 415 V AC	1	**A9A26927**
6 A at 240 V AC		

iOF (open - closed)		
Breaking capacity	**Width in 9 mm mod.**	**Part number**
3 A at 415 V AC	1	**A9A26924**
6 A at 240 V AC		

iOF/SD+OF(1)(3) (open - closed)		
Breaking capacity	**Width in 9 mm mod.**	**Part number**
3 A at 415 V AC	1	**A9A26929**
6 A at 240 V AC		

OF+SD/OF(2)(3) (open - closed)		
Breaking capacity	**Width in 9 mm mod.**	**Part number**
3 A at 415 V AC	1	**A9N26929**
6 A at 240 V AC		

(1) *iOF/SD+OF: for iC60N.*
(2) *OF+SD/OF: for iDPN.*
(3) *SD/OF Auxiliary contacts are used for installing a local trip alarm.*

Link150 communication tap-off unit

DB405661

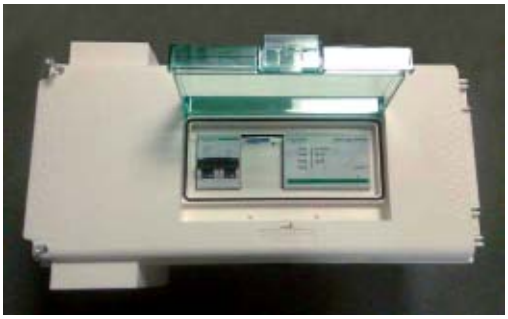

These units transfer information to monitoring systems.

Part numbers to use for installing a communication tap-off unit:

- Disconnector tap-off unit.
- Mounting plate.
- Link150 ethernet gateway.
- iC60N circuit-breaker.
- Power supply.

Disconnector tap-off unit

Disconnection by opening the tap-off unit cover

DD230639

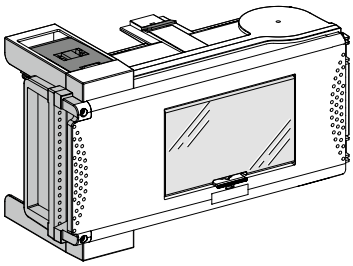

KSB63SM48

Earthing system	Busbar trunking	TT-TNS-TNC-IT[1]
	Tap-off	TT-TNS-TNS-IT[1]
Tap-off polarity		3L + N + PE[2]

Tap-off diagram
(e.g. circuit-breaker protection)

DD230650

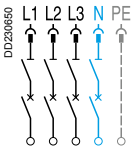

Rating (A)	Number of 9 mm mod.	Number of 18 mm mod. [3]	Connection	Max. cross-section (mm²) Flexible	Max. cross-section (mm²) Rigid	Cable gland[4] (not supplied)	Part number
63	16	8	Lugs	16	16	ISO 50 max.	**KSB63SM48**

(1) *The neutral must be protected or not distributed (3L + PE) for the IT earthing system.*
(2) *Also suitable for tap-off unit 3L + PE (N not distributed).*
(3) *Supplied with blanking plate (1x5 divisible (8 modules) or 2x5 divisible (12 modules)).*
(4) *Max. diameter for a multipole cable.*

DD230652

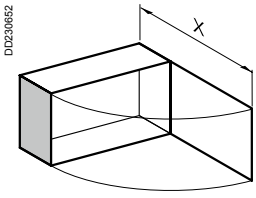

X = 432.5 (KSB63SM48)

KSB63SM48

DB405933

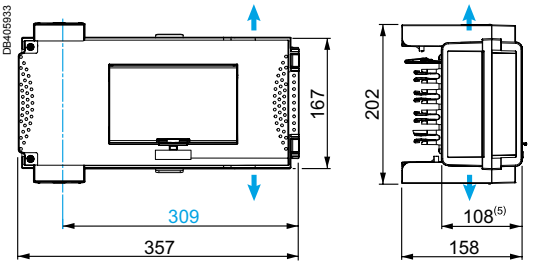

Cable outlet
Tap-off outlet axis

(5) *Surface-mounting dimension*

Link150 communication tap-off unit

DB405841-37

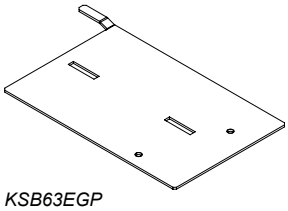

KSB63EGP

Mounting plate

Designation	Rating	Tap-off unit part numbers	Mounting	Part number
For tap-off units	63 A	**KSB63SM48** **KSB63SM58**	Fastening bracket for Link150 devices	**KSB63EGP**

PB114327-4

Link150

Link150

Electrical characteristics	
Weight	175 g (6.17 oz) without packing
Dimensions (H x W x D)	72 x 105 x 71 mm (2.83 x 4.13 x 2.79 in)
Mounting	DIN rail
Power-over-Ethernet (PoE)	Class 3
Power supply	24 V DC (-20/+10%) or Power-over-Ethernet (PoE Class 3 IEEE 802.3 af) at 15 W
Consumption (typical)	24 V DC, 130 mA at 20°C PoE 48 V DC, 65 mA at 20°C
Ambient operating temperature	-25 to +70°C (-13 to +158°F)
Ambient storage temperature	-40 to +85°C (-40 to +185°F)
Humidity rating	5 to 95 % relative humidity (without condensation) at +55ºC
Pollution Degree	Level 2
IP Ratings	On the front panel (wall-mounted enclosure): IP4x Connectors: IP20 Other parts: IP30

PB104437-35

2P iC60N circuit-breaker

Circuit-breaker

iC60N			
Rating	**Curve**	**Number of poles**	**Width in 9 mm mod.**
1 A	D	2	4

ABL8MEM24003-40

ABL8MEM24003

Supply

Regulated power supply

Input voltage	Secondary			Part number
	Output voltage	Nominal power	Nominal current	
Single-phase (N-L1) or 2-phase (L1-L2) connection				
~100…240 V 50/60 Hz	⎓ 24 V	7 W	0.3 A	**ABL8MEM24003**

Metering power supply with PM5350

DB405581

DD230677

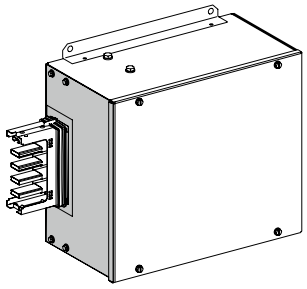

KSA●●●AB4

Part numbers to use for installing a metering power supply unit with PM5350:

- Power supply.
- Metering box for standard power supply.
- PM5350.
- Current transformer.
- Mounting plate.
- Link150 ethernet gateway.
- Regulated power supply.
- iC60N circuit-breaker.

Feed unit (supplied with end cover)

Rating	Mounting	Connection	Max. cross-section (mm^2) Flexible or rigid	Part number	Weight (kg)
100 to 250 A	To right or left	By lugs (M10 screw)	240	**KSA250AB4**	7.20
400 A	To right or left	By lugs (M10 screw)	1 x 300 or 2 x 120	**KSA400AB4**	8.80
500 to 630 A	Right	By lugs (M12 screw)	1 x 300 or 2 x 240	**KSA630ABD4**	18.50
	Left	By lugs (M12 screw)	1 x 300 or 2 x 240	**KSA630ABG4**	18.50
800 to 1000 A	Right	By lugs (M12 screw)	4 x 240 or 4 x 300	**KSA1000ABD4**	24.50
	Left	By lugs (M12 screw)	4 x 240 or 4 x 300	**KSA1000ABG4**	24.50

KSA250AB4

DD230679

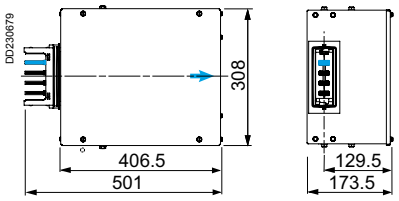

KSA400AB4

DD230678

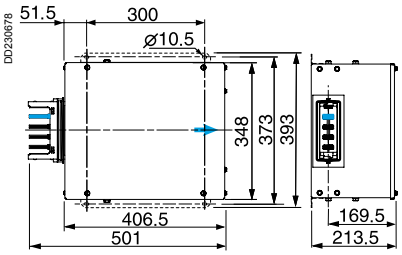

KSA630ABD4

DD202028EN

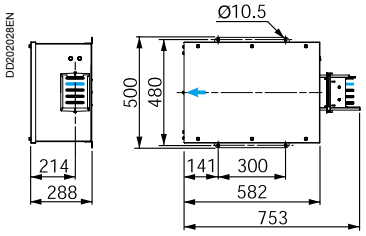

KSA630ABG4

DD202070EN

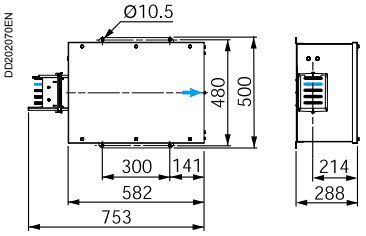

KSA1000ABG4

DD202072EN

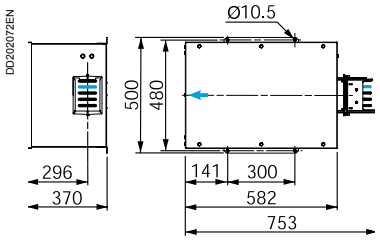

KSA1000ABD4

DD202063EN

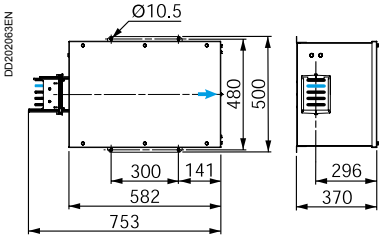

Cable outlet

- Feed unit for horizontal or vertical trunking:
for 250 A to 400 A ratings, can be mounted on the end of a straight length.
- **To ensure the safety of the installation, it is essential to place an end cover on the end of the Canalis.**

Feed unit with PM5350 power meter

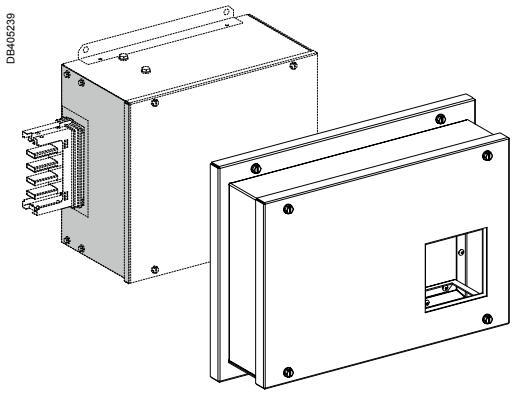

KSA●●●ABCB4

Metering box for standard feed unit

Rating (A)	Designation	Part number	Weight (kg)
250	Communication box for 250 A KS feed unit	**KSA250ABCB4**	4.8
400	Communication box for 400 A KS feed unit	**KSA400ABCB4**	5.3

KSA250ABCB4

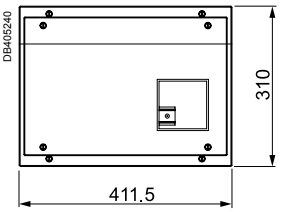

KSA400ABCB4

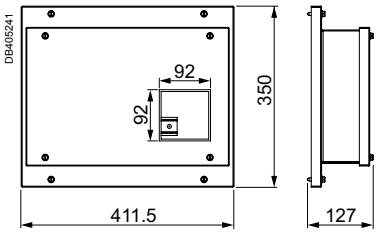

- Allows installation of metering device (PM5350) and its protection (Acti 9).
- You server room is fully monitored, from line to racks.
- It is mounted as a replacement for the covers of standard KSA250AB4 and KSA400AB4 feed units.
- The equipment must be ordered separately depending on the installation.
- For ratings > 400 A, please consult us.

PM5350

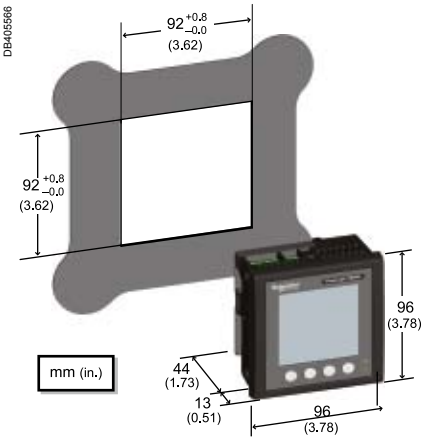

PM5350 power meter

Electrical characteristics			
Part number			**METSEPM5350**
Data update speed			Nominal speed of one second (50/60 cycles)
Input voltage	Nominal voltage		277 V L-N
	Measured voltage with overshoot of measuring range and peak factor		20 to 690 V AC L-L
			20 to 400 V AC L-N
	Permanent overload		700 V AC L-L
			404 V AC L-N
	Frequency range		45 to 70 Hz
Input current	CT ratings	Primary	Adjustable from 1 A to 32767 A
		Secondary	1 A, 5 A nominal
	Frequency range		45 to 70 Hz
AC control power	Operating range		85 to 265 V AC
	Frequency		45 to 65 Hz

16453

16460

Current transformer

Designation	Current (A)	Ratio	Part number
Current transformer (toroid)	100	100/5	**16453**
	200	200/5	**16460**
	250	250/5	**16468**
	400	400/5	**16470**

Feed unit with PM5350 power meter

PB114327-4

Link150

Link150

Electrical characteristics	
Weight	175 g (6.17 oz) without packing
Dimensions (H x W x D)	72 x 105 x 71 mm (2.83 x 4.13 x 2.79 in)
Mounting	DIN rail
Power-over-Ethernet (PoE)	Class 3
Power supply	24 V DC (-20/+10%) or Power-over-Ethernet (PoE Class 3 IEEE 802.3 af) at 15 W
Consumption (typical)	24 V DC, 130 mA at 20°C PoE 48 V DC, 65 mA at 20°C
Ambient operating temperature	-25 to +70°C (-13 to +158°F)
Ambient storage temperature	-40 to +85°C (-40 to +185°F)
Humidity rating	5 to 95 % relative humidity (without condensation) at +55ºC
Pollution Degree	Level 2
IP Ratings	On the front panel (wall-mounted enclosure): IP4x Connectors: IP20 Other parts: IP30

ABL8MEM24003-40

ABL8MEM24003

Supply

Regulated power supply

Input voltage	Secondary			Part number
	Output voltage	Nominal power	Nominal current	
Single-phase (N-L1) **or 2-phase** (L1-L2) connection				
∿**100…240 V** 50/60 Hz	⎓ 24 V	7 W	0.3 A	**ABL8MEM24003**

PB104437-35

2P iC60N circuit-breaker

PB104445-35

4P iC60N circuit-breaker

Circuit-breaker

iC60N			
Rating	**Curve**	**Number of poles**	**Width in 9 mm mod.**
1 A	C	3	6
	D	2	4

Line component

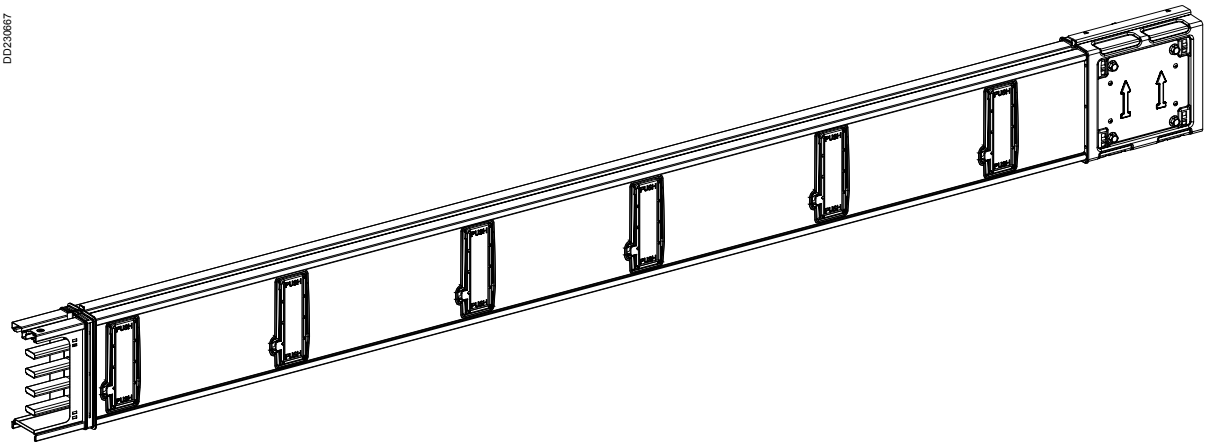

KSA●●●ED4●●●●

Polarity
3L + N + PE or 3L + PEN

Standard component

Rating	Length (mm)	Number of tap-off outlets	Part number	Weight (kg)
100 A	3000	12	**KSA100ED43012**	12.10
160 A	3000	12	**KSC160ED43012**	14.6
		12	**KSA160ED43012**	13.40
250 A	3000	12	**KSC250ED43012**	20.1
		12	**KSA250ED43012**	15.70
400 A	3000	12	**KSC400ED43012**	30
		12	**KSA400ED43012**	20.40
500 A	3000	10	**KSA500ED43010**	34.90
630 A	3000	10	**KSC630ED43010**	57.24
		10	**KSA630ED43010**	36.40
800 A	3000	10	**KSC800ED43010**	77.3
		10	**KSA800ED43010**	43.10

KSA●●●ED43012 and KSC●●●ED43012 from 160 to 400 A

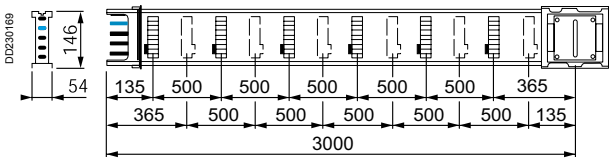

KSA●●●ED43010 and KSC●●●ED43010 from 500 to 800 A

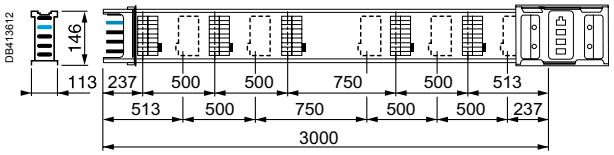

Fastening

Fastening device

Designation	Rating	Max. load (kg)	Mounting	Order in multiples of	Part number	Weight (kg)
Fixing bracket(1)	100 A to 400 A	70	Wall or suspended by threaded rod	10	**KSB400ZF1**	0.30
Pendant kit	100 A to 400 A	80	Under ceiling or IPN(1)	4	**KSB400ZFKP1**	2.70
Flat fastening	All types		Floor	5	**KSA80EZ5**	0.70
Raised floor fastening kit		600	Floor	4	**KSB400ZFKP2**	2.70
500 mm console		600	Edgewise pendant kit	4	**KFBCA81500**	1.20

(1) *Maximum recommended fastening distance: 3 meters.*

DD230681

KSB400ZF1

DD230685

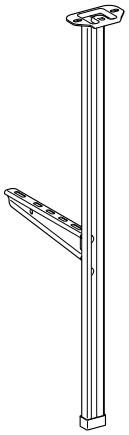

KSB400ZFKP1

DD230682

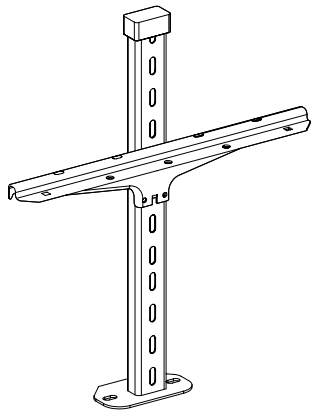

KSB400ZFKP2

DD230688

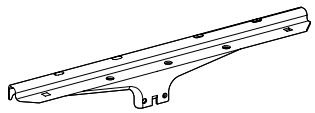

KFBCA81500

KSB400ZF1

DD210301

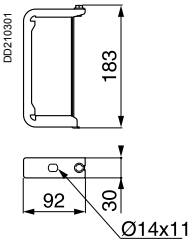

KSA80EZ5

DD230686

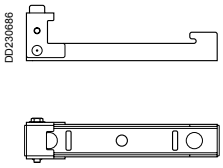

KSB400ZFKP2

DD230683

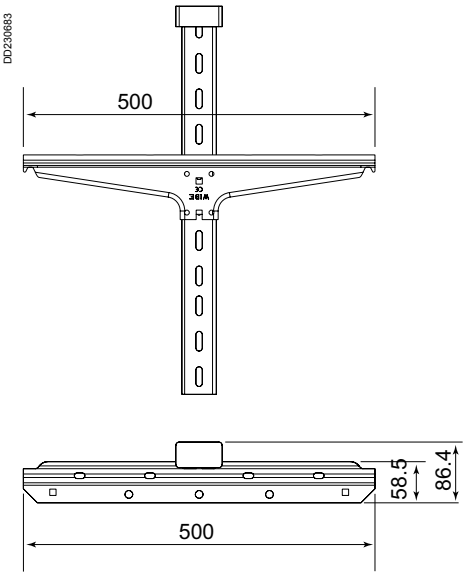

KSB400ZFKP1

DD230684

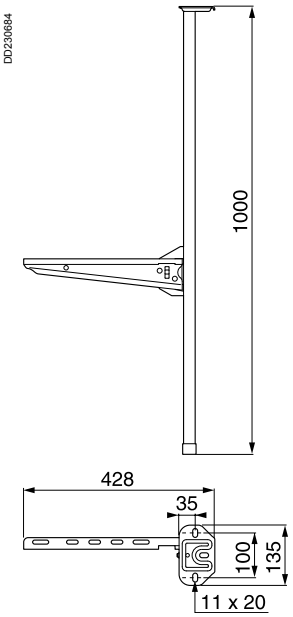

KFBCA81500

DD230687

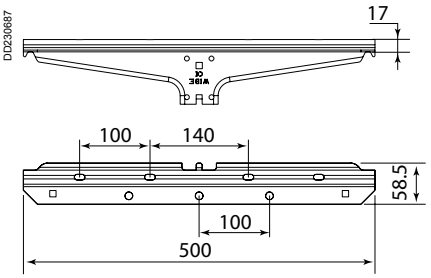

Tools

For quotation and installation that satisfy your needs, software quotation tools and installation guides have been specifically developed for the iBusway for Data Center solution.

The user guide

This document, to be ordered when carrying out explains the installation procedure.

> Installation of lines
> Cabling of tap-off units
> Cabling of the automation enclosure
> Commissioning

This guide is intended for:
> the panel builder equipping the tap-off units,
> the contractor installing,
> the contractor configuring,
> the Data Center operator who will use it to manage his site,
> the maintenance department for site management (adding/modifying tap-off units).

User guides: document references DEBU029EN/FR and DEBU033EN/FR.

The CanBrass and CanCad applications

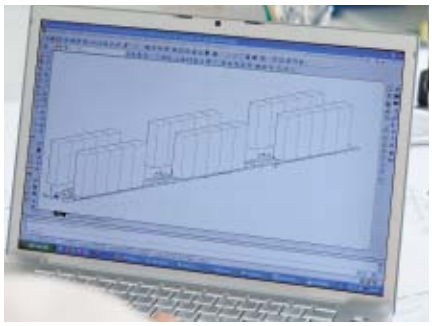

These tools, used to design the installation, allow graphic representation of the Canalis lines and tap-off units. You can use the CanCad application to represent the layout of the Canalis lines in an AutoCad environment and thus validate project conformity.

These tools are intended for:
> electrical consultants,
> the Schneider Electric sales agencies accompanying you throughout your projects.

The iBusway for Data Center quotation software iBusway quotation tool

Use this software to calculate solution cost and place your order with our sales department.

This software is intended for:
> Schneider Electric sales representatives,
> electrical consultants.

Configuration manual for the Magelis monitoring screen

This document is available for download when you implement a Magelis project. It explains the parameter setting procedure for the iBusway for Data Center.
> Configuring the server room.
> Configuring the areas.
> Configuring the alarms.

Note: the iBusway for Data Center solution consists of standard products.
Additionnal information regarding Canalis offer is available on www.schneider-electric.com.

iBusway around the world

> **Aalborg Universitet**, University - Denmark
> **Århus Universitet**, University - Denmark
> **Banco Commercial Portugues** - Portugal
> **Banco Santander**, Bank - Spain
> **Bank de Sabadell**, Bank - Spain
> **BBVA**, Bank - Spain
> **BMW**, Car manufacturer - China
> **BSCH Ciudad**, Financiera - Spain
> **Bahrti, Noida and Pune**, Data Center & Telecoms - India
> **Belgacom**, Telecom & Internet provider - Belgium
> **Bezek Narkis**, Telecom - Israel
> **Bouygues Telecom**, Telecom - France
> **Business & Decision**, Hosting - France
> **Colt**, Telecom & Internet provider - Belgium
> **CSIR**, Research - South Africa
> **Crédit Agricole**, Bank - France
> **DC Jaguar Network**, Hosting - France
> **Delhi2**, Data Center - India
> **Digiplex**, Colocation facility - Sweden
> **EMC2**, Data Center - India
> **ESRF European synchrotron**, Research - France
> **Eurobank** - Greece
> **Euroclear**, Transaction bank - Belgium
> **Française Des Jeux**, Lottery games - France
> **Fujitsu** - Netherlands
> **Global Switch**, Data Center provider - Spain
> **IBM**, Head quater - Spain, Italy
> **IBM**, Project XIV, IT - Israel
> **Interxion**, Colocation - Spain, Belgium
> **Isafjord Ericsson**, Mobile phones - Sweden
> **Jilin petrochemical**, Petrochemical - China
> **JN Datacenter**, Data Center - Denmark
> **Johanesburg Stock Exchange**, Stock Exchange - South Africa
> **Kista Modemet**, Office - Sweden
> **Kuusitunturi** - Finland
> **La caixa IBM**, Bank - Spain
> **La poste**, Telecom & internet provider - Luxembourg
> **La poste Kayl**, Hosting - Luxembourg
> **Lenovo**, Computers - China
> **Linköping Ericsson**, Mobile phones - Sweden
> **Linxtelecom**, Telecom - Russia
> **Nedjma**, Telecom - Algeria
> **Nomura Research Institute NRI**, Research - Japan
> **MCI-Worldcom**, Telecom & Internet provider - UK, Italy
> **Ministère de la défense**, Minister - France
> **Peugeot,** Car manufacturer - France
> **Pink Roccade**, SSII IT services - Netherlands
> **Reuters**, World Wide new - Switzerland
> **Taiping airport**, Airport - China
> **Telvent**, IT solutions - Spain
> **Station switch** - Belgium
> **ST MicroElectronics**, Semiconductor manufacturer - France
> **Safe Host**, Colocation, Hosting - Switzerland
> **SAUR**, Water - France
> **SUVA Luzern**, Insurance compagny - Switzerland
> **Telecity Swedbank**, Bank - Sweden
> **Telenet**, Data Center - Belgium
> **Uni C**, University - Denmark
> **Via numerica**, Telecom - France
> **Verizon St denis**, Telecom - France
> **Vodafone**, Telecom - Egypt

Index of part numbers

Part number	Page
13137	36
16453	42
16460	42
16468	42
16470	42
81278	36
81283	36
81478	36
81483	36
A	
A9A26924	38
A9A26927	38
A9A26929	38
A9MEM3155	37
A9N26929	38
ABL8MEM24003	40, 43
K	
KFBCA81500	45
KSA80EZ5	45
KSA100ED43012	44
KSA160ED43012	44
KSA250AB4	41
KSA250ABCB4	42
KSA250ED43012	44
KSA400AB4	41
KSA400ABCB4	42
KSA400ED43012	44
KSA500ED43010	44
KSA630ABD4	41
KSA630ABG4	41
KSA630ED43010	44
KSA800ED43010	44
KSA1000ABD4	41
KSA1000ABG4	41
KSB32CM55	32, 33, 34
KSB32CP	32, 33, 36
KSB50SV4	37
KSB50SV5	37
KSB63EGP	40
KSB63PMP	37
KSB63SM48	32, 33, 34, 37, 39, 40
KSB63SM58	32, 34, 37, 40
KSB100SM412	32, 33, 34, 37
KSB100SM512	32, 34, 37
KSB160SM424	35
KSB160SM524	35
KSB400ZF1	45
KSB400ZFKP1	45
KSB400ZFKP2	45
KSC160ED43012	44
KSC250ED43012	44
KSC400ED43012	44
KSC630ED43010	44
KSC800ED43010	44

Part number	Page
M	
METSEPM5350	42
P	
PKY16F423	36
PKY16F435	36
PKY16F723	36
PKY16F735	36
PKY16M423	36
PKY16M435	36
PKY16M723	36
PKY16M735	36
PKY32F423	36
PKY32F435	36
PKY32F723	36
PKY32F735	36
PKY32M423	36
PKY32M435	36
PKY32M723	36
PKY32M735	36

Notes

Schneider Electric Industries SAS

35, rue Joseph Monier
CS 30323
F - 92506 Rueil Malmaison Cedex
France

RCS Nanterre 954 503 439
Share capital: €896 313 776
www.schneider-electric.com

As standards, specifications and designs change from time to time, please ask for confirmation of the information given in this publication.

Design: Schneider Electric Industries SAS
Publication: Schneider Electric Industries SAS
Printing:

This document has been printed on ecological paper

© Schneider Electric Industries SAS - All rights reserved

DEBU028EN

11/2015