Medium Voltage Distribution

Medium Voltage Products and Equipment

New Zealand
Catalogue
2015/16

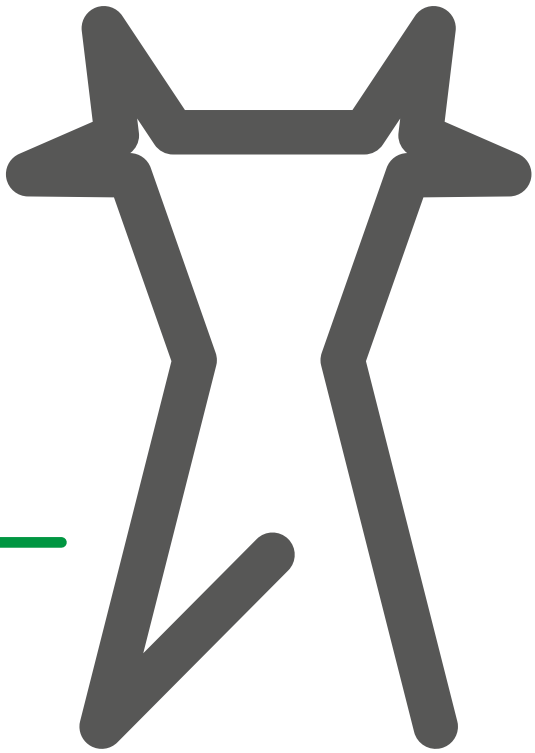

Schneider Electric

Comprehensive Installed Base Services

Renew
> ECOFIT™
> Modernisation solutions
> Infrastructure enhancement
> End-of-life services
> SF_6 removal

Plan
> Technical feasibility studies
> Design services
> Protection studies
> Preliminary design and detailed design

Optimise
> Remote monitoring services
> Maintenance consulting
> On-site energy, reliability
> Safety assessment

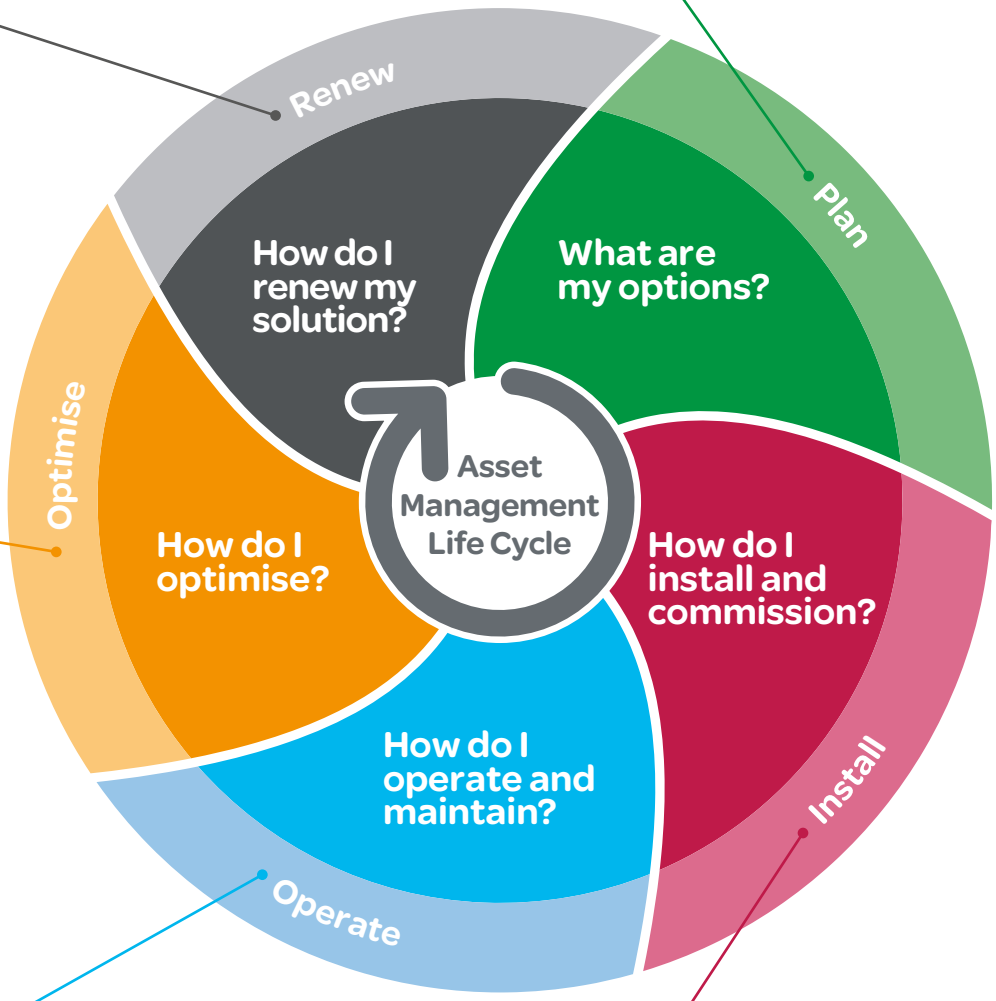

Operate
> Warranty extensions/service plans
> Expert technical support
> Preventive/predictive maintenance
> Spare parts management
> Technical training

Install
> Installation supervision
> Project management
> Site coordination
> Installation and commissioning

Peace of mind for every stage of the life cycle.

Contents

A History of Progress

This Catalogue

We are proud to present to you Schneider Electric's catalogue dedicated to its Medium Voltage offer. It represents the offering of the world's largest supplier of medium voltage equipment and encompasses all aspects of switchgear, transformers, package substations, protection and control gear.

Schneider Electric's origins date back to 1836 when the company was founded by brothers, Aldolphe and Eugene Schneider. Their company was based on mining, forges and foundries in Le Creusot, France, and rose to prominence during the Industrial Revolution. The company diversified quickly into armaments, power stations, electric locomotives, construction, iron and steel and took a leading position in the emerging electricity market.

The company survived the turbulent times of a new century and two world wars, and then expanded into electricity, steel works, and construction. Post-war diversification and a change of ownership in 1969 saw the company experience its most challenging period financially.

In 1981 new management overhauled the company's assets, concentrating efforts on the electrical and controls industry. Key global acquisitions followed:

- **Merlin Gerin,** a leader in electrical switching technologies was formally brought into the group in 1986.
- **Telemecanique,** a leading specialist in industrial control and automation joined the business in 1988.
- **Square D,** a major North-American supplier of electrical distribution and industrial control equipment was acquired in 1991.

These three brands were strongly represented in Australia. Local acquisitions followed:

- **ASET Transformers,** a Victorian distribution transformer and kiosk manufacturer was acquired in 1994.
- **Nu-Lec Industries,** a Queensland manufacturer of pole-mounted reclosers and sectionalisers, was added in 2000.

Schneider Electric then focused its attention on the residential market. The company gained the household electrical accessory brand names of New Zealand based **PDL** in 2001 and Australian manufacturer, **Clipsal** in 2003.

Commercial sector growth continued to follow with more prestigious names joining Schneider Electric including: **TAC,** a global leader in building automation; **CiTect,** a global provider of software for industrial automation; **Pelco,** a hi-tech manufacturer of security cameras; **SCADAgroup,** an Australian-based leading provider of telemetry products and solutions; and **APC,** a world leader in critical power and cooling services.

2010 saw the company embark on one its largest acquisitions, **Areva T&D.** The acquisition of Areva's Distribution activity enables Schneider Electric to provide a comprehensive offer in medium voltage switchgear and network automation. It strengthens the company's access to worldwide utilities and electro-intensive customers and enhances its position in the middle of the Smart Grid technological revolution.

To further strengthen its position in the Smart Grid market, **Telvent** is now part of Schneider Electric; offering electrical utility customers a complete solution for a more reliable, efficient and secure grid.

After more than 170 years of existence, sustainable development is now at the core of Schneider Electric's strategy. Energy management is a key contributor to CO_2 emission reduction and the company sees itself as the only world leader in the automation and energy management fields. The company is committed to providing energy solutions that provide more while using less. To reinforce this commitment the company has formed many strategic alliances and proudly supports Australian initiatives such as ABGR, NABERS and EEO. The company is also particularly proud of its achievement with BipBop, a programme geared at bringing electricity to the 1.6 billion of the planet's population who are deprived of it.

Legacy Brands

In the medium voltage market, the history of the first 50 years of the 20th century was one of establishment of many suppliers, often local or national. The second 50 years has been one of consolidation of these companies. Due to the long life of electrical equipment (circa 30 years), many networks still have functioning equipment from companies which have been absorbed. Schneider Electric provides a range of services to support our legacy equipment throughout its lifecycle, with offers such as: specialist maintenance and diagnostics, retrofits, spare parts, and end of life disposal.

Such legacy brands include:

- Merlin Gerin (France)
- Square D (USA)
- Yorkshire Switchgear (UK)
- Nuova Magrini Galileo (Italy)
- Federal Pioneer (Canada)
- Areva (France)
- GEC (UK)
- GEC-Alsthom (UK – France)
- VEI (Italy)
- MESA (Spain)
- English Electric (UK)

Index

Medium Voltage Panorama

Complete offer ranging from 3kV to 52kV

1

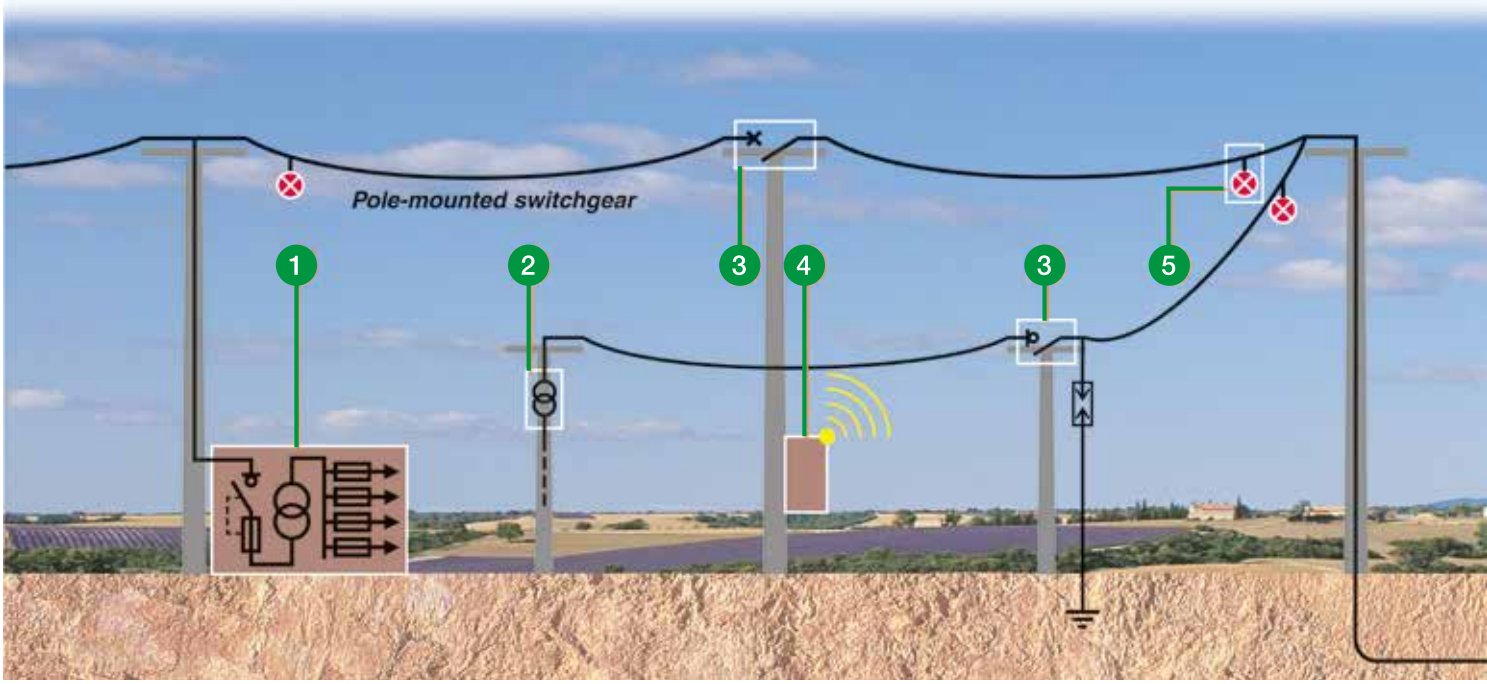

1

Prefabricated MV/LV substation (rectangular)

KPX
Up to 33kV
and 2.5MVA

Internal arc classification:
IAC-AB according to
AS62271.202

2

Pole-mounted transformers

MINERA
Immersed transformer
Up to 33kV and 500kVA

3

Pole-mounted switchgear

N Series
Up to 38kV/800A
Recloser

RL Series
Up to 38kV/630A
Load break switch

U and W Series
Up to 27kV/630A
Recloser

4 5

Overhead network control and monitoring

AVDC
Monitoring, control
and protection

Easergy Flite, G200
Communicating fault passage
indicator for overhead MV lines

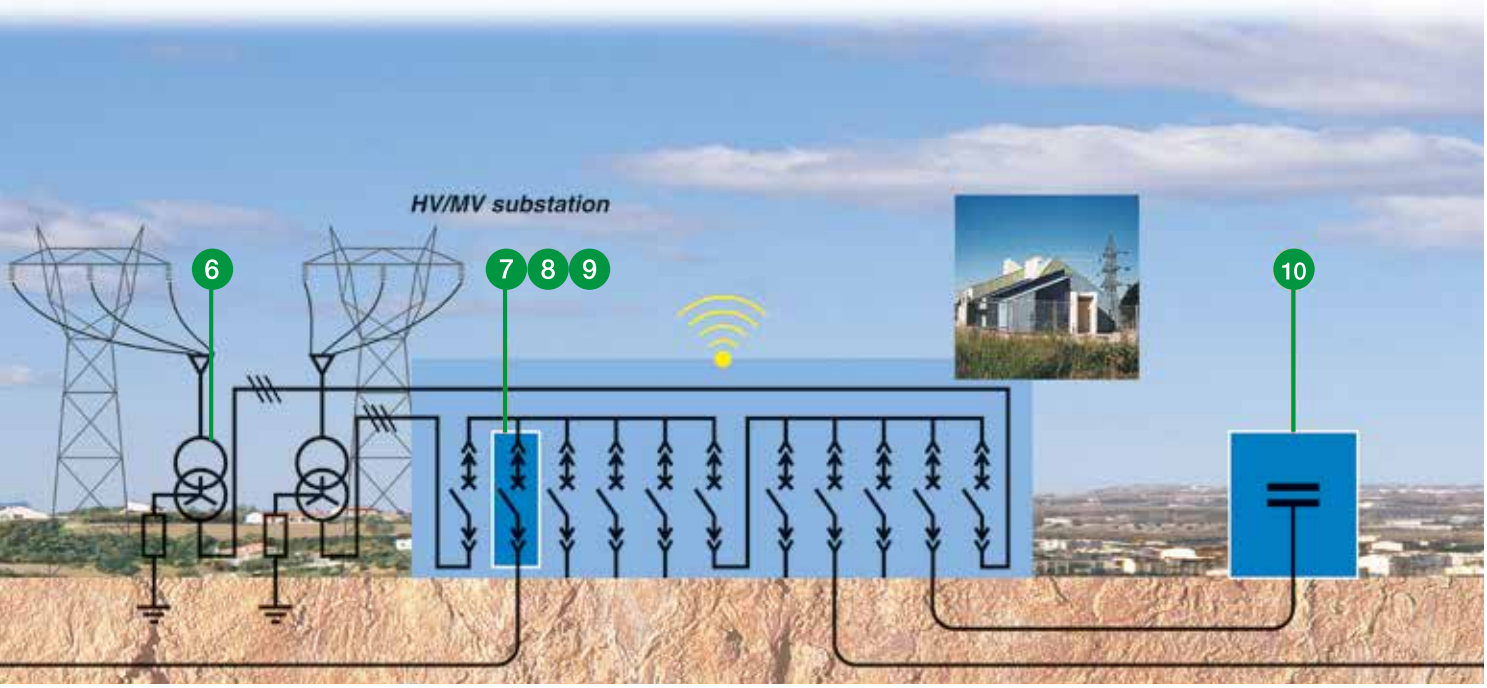

6

Power transformer

MINERA
Power transformer
up to 170kV
and 80MVA

7

Primary substation switchgear

Air Insulated Switchgear (AIS)
MCset up to 24kV/2500A
PIX up to 24kV/2500A
GenieEvo up to 13.8kV/2500A
F400 up to 36kV/2500A
DNF7-2 up to 36kV/3150A

Gas Insulated Switchgear (GIS)
GMA up to 24kV/2500A
CBGS up to 36kV/2000A
GHA up to 36kV/2500A
WI up to 52kV/2500A

8 9

Digital protection relays and power metering

Sepam Series 10, 20, 40, 60 and 80 protection, metering and control relays

MiCOM Series Px10, Px20, Px30 & Px40 protection and control relays.

PowerLogic Digital Meters
Waveform capture and accurate metering

VAMP series
arc fault detection relays

10

Automatic capacitor bank

CP range up to 36kV compact enclosure including switching and Earthing devices

Medium Voltage Panorama

Complete offer ranging from 3kV to 52kV

1

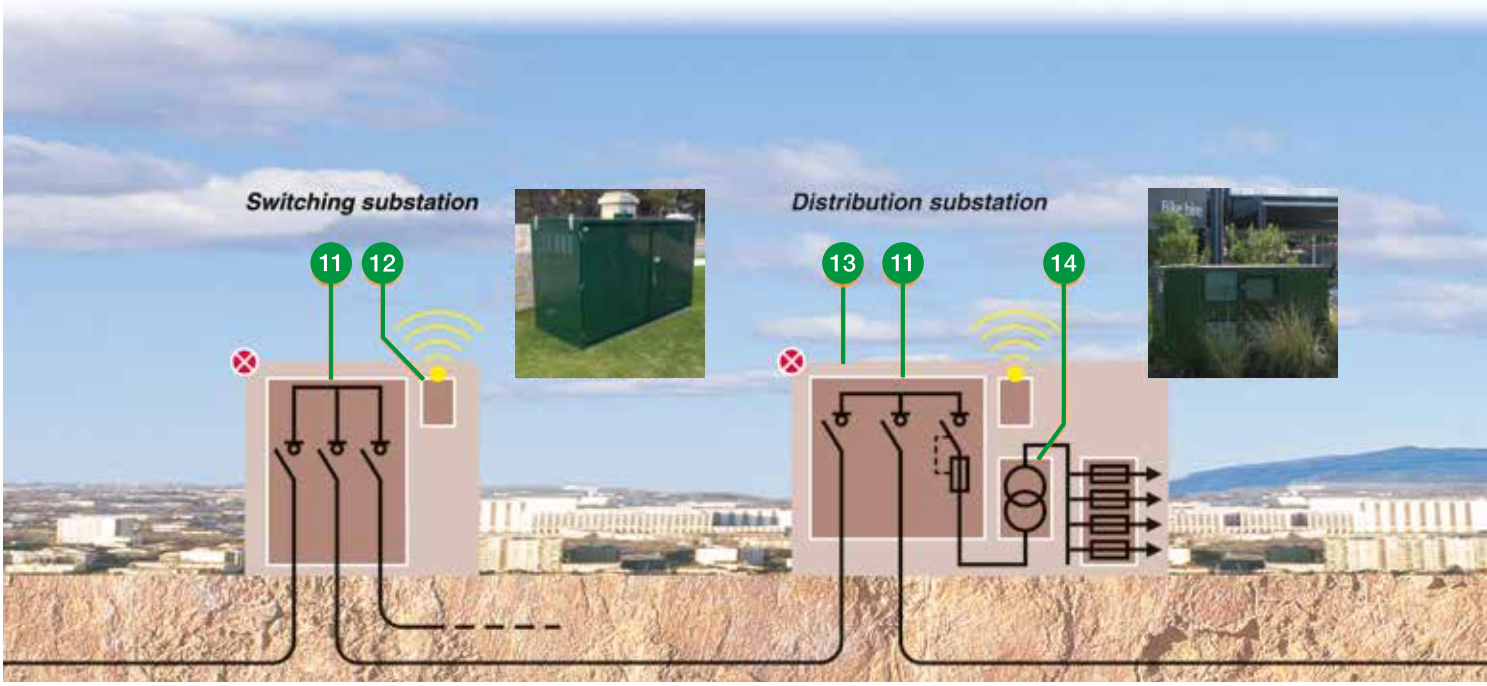

11

Ring main unit

RM6 up to 24kV/630A
FBX up to 24kV/1250A
CAS-36 up to 36kV/630A
Flusarc up to 36kV/1250A
Ringmaster C up to 13.8kV/630A

12

Remote control
and fault tracking

Easergy T200I,
T200E, T200H, Flair
Remote control and monitoring through DNP3, Modbus and IEC protocols

13

Prefabricated MV/LV
substation (square)

KPX²
Up to 22kV and 2.5MVA

Internal arc classification:
IAC-AB according to
AS62271.202

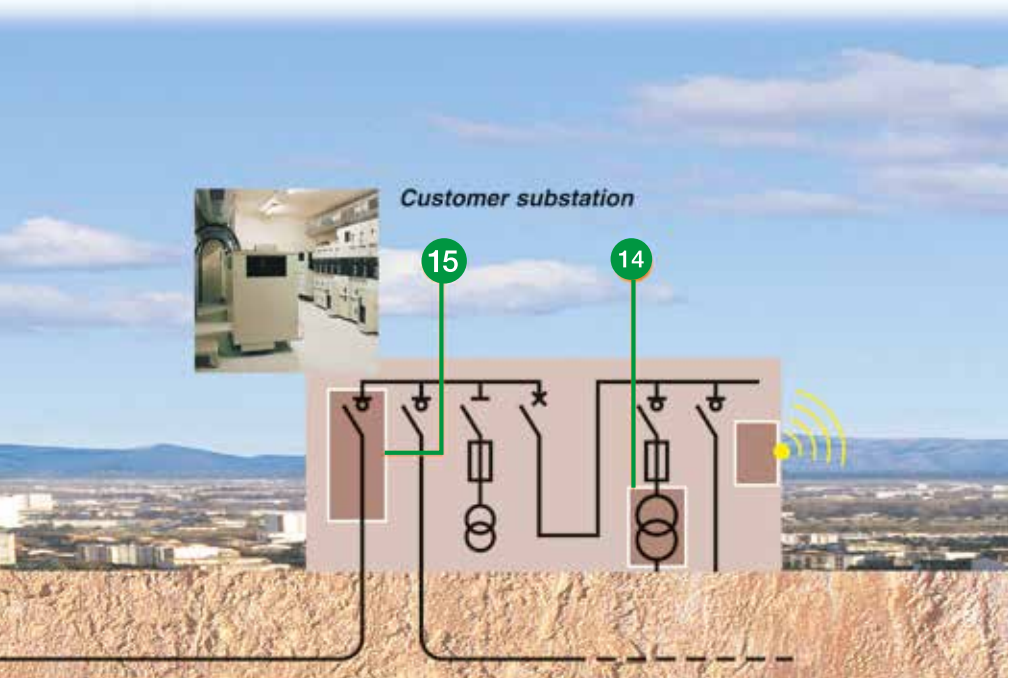

14

Distribution transformer

GMX, TESA immersed transformers up to 33kV and 5MVA

Trihal Dry Type transformers up to 36kV and 3.15MVA

15

Modular switchboard

Premset
Up to 15kV/630A

SM6-24
Up to 24kV/1250A

SM6-36
Up to 36kV/630A

DVCAS
Up to 36kV/630A

Building a smarter grid with reliable, efficient energy

How Schneider Electric smart grid-ready products and solutions help balance your grid equation.

More and more people are learning to depend on energy as being integral to their daily lives.

Meanwhile, the electricity market is changing. Every day, end users' expectations increase in terms of reliability and quality, and they gain greater awareness of energy's environmental impact.

It's an evolution. But as our reliance on electricity grows globally, the ways in which we produce, distribute, and use energy must also evolve. The solution will not only involve smarter demand, but also smarter supply - and as such, a smarter grid is at the heart of the issue.

As The Global Specialist in Energy Management™, Schneider Electric is smart grid-ready, enabling the products and solutions that support and connect the five key domains of a smarter grid:

- Flexible distribution
- Smart generation
- Demand-side management
- Efficient homes (including electric vehicles)
- Efficient enterprise (buildings, industrial facilities, and data centres).

Our vision isn't just to connect our customers to the smart grid - but to also connect them with each other, facilitating smarter interactions and leading to increased energy management capabilities.

Our smart grid solutions include:

- Smart medium voltage (MV) / low voltage (LV) equipment
- Substation automation
- Feeder automation
- Enhanced distribution management solutions
- Microgrid control
- Volt/VAr management
- Real-time condition monitoring
- Electric vehicle load management.

MV Metal-Enclosed Switchgear Selection Table

Selection table

1

Shielded Solid Insulation System / Air-Insulated Switchgear

	 Premset	 Outdoor Premset	 SM6-24	 GenieEvo	 Mcset 1-2-3	 PIX
1 Internal Arc Classification	IAC A-FLR 21kA/1s	IAC A-FLR (*) 21kA/1s	IAC A-FLR 20kA/1s	IAC A-FLR 25kA/1s	IAC A-FLR 50kA/1s	IAC A-FLR 40kA/1s
2 Loss of Service Continuity	LSC2A	LSC2A	LSC-2A	LSC-2A	LSC-2B	LSC-2B
3 Partitioning	PM	PM	PI	PM	PM	PM
4 Degree of Protection	IP 3X	IP54	IP 2XC	IP 3X	IP 41	IP 4X
	Un 17.5 kV In ≤ 1250 A Ith 25 kA	Un 13.8 kV In 630 A Ith 21 kA	Un ≤ 24 kV In ≤ 1250 A Ith ≤ 25 kA	Un ≤ 13.8 kV In ≤ 2500 A Ith ≤ 25 kA	Un ≤ 17.5 kV In ≤ 4000 A Ith ≤ 50 kA	Un ≤ 24 kV In ≤ 2500 A Ith ≤ 40 kA
5 Type of Protection	Circuit Breaker	Circuit Breaker	Circuit Breaker / Fuses	Circuit Breaker	Circuit Breaker	Circuit Breaker
6 Switching Medium	Vacuum	Vacuum	Vacuum / SF_6	Vacuum	Vacuum / SF_6	Vacuum / SF_6
7 Type of Circuit Breaker	Fixed	Fixed	Demountable	Fixed	Withdrawable	Withdrawable
8 Catalogue Page No.	Page 7	Page 8	Page 9	Page 20	Page 16	Page 19

(*) Consult Schneider Electric for availability.

Gas Insulated Switchgear

	 GMA	 GHA	 WI
1 Internal Arc Classification	IAC A-FLR 31.5kA/1s	IAC A-FLR 40kA/1s	IAC A-FL 40kA/1s
2 Loss of Service Continuity	LSC-2B	LSC-2B	LSC-2B
3 Partitioning	PM	PM	PM
4 Degree of Protection	IP 3X	IP 3X	IP 3X
	Un ≤ 24 kV In ≤ 2500 A Ith ≤ 31.5 kA	Un ≤ 36 kV In ≤ 2500 A Ith ≤ 40 kA	Un ≤ 52 kV In ≤ 2500 A Ith ≤ 40 kA
5 Type of Protection	Circuit Breaker	Circuit Breaker	Circuit Breaker
6 Switching Medium	Vacuum	Vacuum	Vacuum
7 Type of Circuit Breaker	Fixed	Fixed	Fixed
8 Catalogue Page No.	Page 30	Page 31	Page 32

			
Motorpact	**MCset4**	**SM6-36**	**F400**
IAC A-FLR 50kA/0.25s	IAC A-FLR 31.5kA/0.15s	IAC A-FL 16kA/1s	IAC A-FLR 40kA/0.15s
LSC-2A	LSC-2B	LSC-2A	LSC-2B
PI	PM	PI	PM
IP 42	IP 41	IP 2XC	IP 3X
Un ≤ 7.2 kV In ≤ 400 A Ith ≤ 50 kA	Un ≤ 24 kV In ≤ 2500 A Ith ≤ 31.5 kA	Un ≤ 36 kV In ≤ 1250 A Ith ≤ 25 kA	Un ≤ 40.5 kV In ≤ 2500 A Ith ≤ 40 kA
Contactor / Fuses	Circuit Breaker	Circuit Breaker	Circuit Breaker
Vacuum	Vacuum / SF_6	Vacuum / SF_6	SF_6
Withdrawable	Withdrawable	Fixed / Withdrawable	Withdrawable
Page 38	Page 17	Page 10	Page 21

Ring Main Unit

					
	RM6	**FBX**	**Ringmaster**	**DVCAS**	**Flusarc 36**
1 Internal Arc Classification	IAC A-FL 20kA/1s	IAC A-FL 20kA/1s	IAC A-F 21kA/1s	IAC A-FL 20kA/1s	IAC A-FL 20kA/1s
2 Loss of Service Continuity	LSC-2A	LSC-2A	LSC-2A	LSC-2A	LSC-2A
3 Partitioning	PM	PM	PI	PM	PM
4 Degree of Protection	IP 3X	IP 2X	IP 54	IP 3X	IP 3X
	Un ≤ 24 kV In ≤ 630 A Ith ≤ 25 kA	Un ≤ 24 kV In ≤ 1250 A Ith ≤ 25 kA	Un ≤ 13.8 kV In ≤ 630 A Ith ≤ 21 kA	Un ≤ 36 kV In ≤ 630 A Ith ≤ 20 kA	Un ≤ 36 kV In ≤ 1250 A Ith ≤ 20 kA
5 Type of Protection	Circuit Breaker / Fuses	Circuit Breaker / Fuses	Circuit Breaker	Circuit Breaker	Circuit Breaker / Fuses
6 Switching Medium	SF_6	Vacuum	SF_6	Vacuum	Vacuum
7 Type of Circuit Breaker	Fixed	Fixed	Fixed	Fixed	Fixed
	Page 12	Page 13	Page 15	Page 11	Page 14

Seamless Integration With Sepam or Micom Protection Relay

For further information, contact your Schneider Electric Sales Representative.

Secondary Distribution Switchgear Premset

Compact modular secondary distribution switchgear

Premset

Metering panel - M06S

3 in 1 integrated core units

Overview

Premset is a range of compact (375mm wide), SF6-free, shielded solid insulated fixed switchgear up to 15kV/630A. It is the safest MV switchgear in its class, combining Shielded Solid Insulation System (2SIS) with extreme compactness, complete modularity and an easy to use 3-in-1 architecture. An outdoor version is also available.

Functional units:

- I06T - Disconnecting switch with integrated Earth switch (630A)
- I06H - Fast-closing disconnecting switch with integrated Earth switch (630A)
- D01-02N - Disconnecting circuit breaker with integrated Earth switch (100/200A)
- D06N - Disconnecting circuit breaker for general protection (630A)
- D06H - OCO heavy-duty circuit breaker with integrated Earth switch (630A)
- M06S - Solid-insulated Earth-screened metering unit
- M06A - Air-insulated metering unit
- VTM/VTP - Voltage transformer units

Electrical characteristics

Rated voltage	Ur	kV	12	17.5
Insulation level				
Power frequency withstand	Ud	50Hz, 1 min (kV rms)	42	
Lighting impulse withstand	Up	1.2/50 µs (kV peak)	95	
Rated current				
Rated busbar current	In	A	In ≤ 1250 A	
Short-time withstand current	Ith	kA	21kA x 3s 25kA x 2s 20kA x 4s	

Main characteristics

Internal arc withstand

- 3 sided protection: 21kA/1s, A-FL
- 4 sided protection: 21kA/1s, A-FLR

Protection Index

- Shielded Solid Insulation System (2SIS)
- Class: PM (metallic partition)
- Loss of service continuity class: LSC2A
- Units in switchboard: IP3X
- Between compartments: IP2X

Applications

- Buildings, mining and public distribution
- Network protection - Sepam or MiCOM
- Intelligent networks - Remote management and monitoring

Shielded Solid Insulation System

The whole main circuit is solid insulated with epoxy or EPDM and the surface is covered by a screen connected to the Earth. This ensures the switchboard is insensitive to harsh environments (humidity, dust, pollution, etc.) and maintenance free.

Enhanced Safety

Premset switchgear is the safest and most intuitive switchgear in its class. Safety improvements include:

- A 3-in-1 design allowing breaking, disconnection, and Earthing functions to be all integrated into a single compact three-position device, making it simpler and easier to operate
- Positively driven built-in failsafe interlocks
- Live cable interlock preventing Earthing of live cables
- Integrated cable test device, interlocked with the Earth switch (no need to enter cable box or disconnect cable terminations)
- Direct Earthing of downstream cables

Solid Insulation System

Secondary Distribution Switchgear Outdoor Premset

Compact modular secondary switchgear

Outdoor Premset

Overview

Outdoor Premset is a range of compact (375mm wide), SF6-free, shielded solid insulated fixed switchgear up to 13.8kV/630A. It is the safest MV switchgear in its class, combining Shielded Solid Insulation System (2SIS) with extreme compactness, complete modularity and an easy to use 3-in-1 architecture.

Functional units:

- SV6 - General purpose disconnecting switch (630A)
- SH6 - Heavy-duty disconnecting switch (630A)
- CV2 - MV/LV transformer protection disconnecting circuit breaker (200A)
- CV6 - General protection disconnecting circuit breaker (630A)
- CH6 - Heavy-duty line protection disconnecting circuit breaker (630A)
- MV6 - Solid-insulated Earth-screened metering unit
- VTM/VTP - Voltage transformer units

Outdoor Premset switchboard

Electrical characteristics

Rated voltage	Ur	kV	7.2	12	13.8
Insulation level					
Power frequency withstand	Ud	50Hz, 1 min (kV rms)		38	
Lighting impulse withstand	Up	1.2/50 µs (kV peak)		95	
Rated current					
Rated busbar current	In	A		630	
Short-time withstand current	Ith	kA/3s		21	

Outdoor Premset switchboard

Main characteristics

Internal arc withstand

- Outdoor substation installation: 21kA/1s A-F
- Indoor substation installation:
21kA/1s A-F when installed against a wall.
21kA/1s A-FLR (*) when installed with top exhaust.

Protection Index

- Shielded Solid Insulation System (2SIS)
- Class: PM (metallic partition)
- Loss of service continuity class: LSC2A
- All external faces of the switchgear: IP54
- Between compartments: IP2X

(*) Consult Schneider Electric for availability.

Applications

- Utilities, buildings, mining and public distribution
- Network protection - Sepam or MiCOM
- Intelligent networks - remote management and monitoring

Cable testing device

Outdoor Premset switchboards are fitted with a dedicated cable testing device that greatly increases safety during cable testing. Cable testing can be carried out without accessing the cable box (cables remain connected) and without touching the cable terminations. Test device can be connected, prior to removing the Earth link, improving safety for the operator.

Enhanced Safety

Premset switchgear is the safest and most intuitive switchgear in its class. Safety improvements include:

- A 3-in-1 design allowing breaking, disconnection, and Earthing functions to be all integrated into a single compact three-position device, making it simpler and easier to operate
- Positively driven built-in failsafe interlocks
- Live cable interlock preventing Earthing of live cables
- Integrated cable test device, interlocked with the Earth switch (no need to enter cable box or disconnect cable terminations)
- Direct Earthing of downstream cables

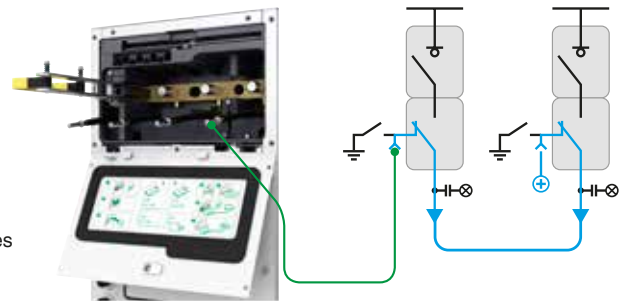

Direct access to cable conductor

Double isolating gap during testing

For more info:
Catalogue:
AMTED398078EN

Auto Transfer System
Application: refer page 95

Secondary Distribution Switchgear SM6-24

Modular secondary distribution switchgear

1

DM1-A

Switch-disconnector

SF1 circuit breaker

SM6

Overview

The SM6-24 comprises modular units containing fixed or withdrawable metal-enclosed sulphur hexafluoride (SF_6) or vacuum switchgear, with a service voltage up to 24kV / 1250A.

SM6-24 includes a wide range of functional units to meet secondary distribution application needs.

- IM - 630A load break/fault make switch
- QM - 200A fuse-switch combination
- DM1 - SF_6 630/1250A circuit breaker SF1
- DMV - vacuum 630/1250A circuit breaker Evolis
- CRM - Rollarc 400 or 400D contactor
- CVM - vacuum contactor
- GBC - medium voltage metering
- NSM - 630A auto-changeover

Electrical characteristics (SM6-24)

Rated voltage	Ur	kV		7.2	12	17.5	24
Insulation level							
Power frequency withstand	Ud	50Hz, 1 min (kV rms)		20	28	38	50
Lighting impulse withstand	Up	1.2/50 µs (kV peak)		60	75	95	125
Rated current							
Rated busbar current	In	A		630 - 1250			
Short-time withstand current	Ith	kA/1s	12.5	400 - 630 - 1250			
			16	630 - 1250			
			20	630 - 1250			
			25	630 - 1250			

Main characteristics

Internal arc withstand

- Standard: 12.5kA/1s, A-FL
- Optional: 12.5kA/1s, A-FLR
  16kA/1s, A-FL and A-FLR
  20kA/1s, A-FL and A-FLR
  in accordance with AS 62271-200

Protection index

- Air insulated switchgear (AIS)
- Class: PI (insulating partition)
- Loss of service continuity class: LSC2A
- Units in switchboard: IP3X
- Between compartments: IP2X
- Cubicle: IK08

Applications

- Commercial, industrial, mining and public distribution
- Network protection – Sepam or MiCOM
- Intelligent networks - remote management and monitoring

New internal arc classification

The enhanced SM-24 panels have an upwards exhaust tunnel up to 20kA/1s.

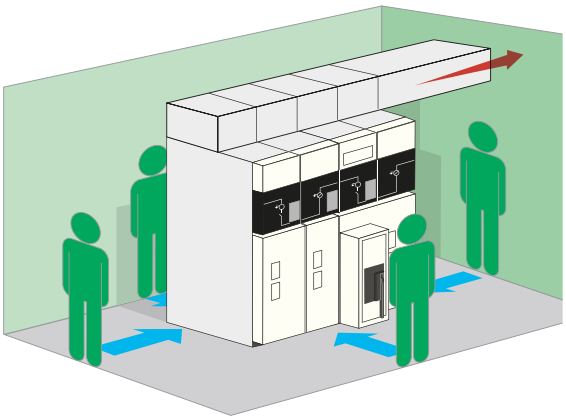

Installation of an SM6 24kV switchboard installed in the middle of the room.

For more info:
Catalogue:
AMTED398078EN

Auto Transfer System
Application: Refer page 95

Secondary Distribution Switchgear SM6-36

Modular secondary distribution switchgear

DM1-A

QM

Overview

The SM6-36 comprises modular units containing fixed or withdrawable metal-enclosed sulphur hexafluoride (SF_6) or vacuum switchgear with a service voltage up to 36kV / 630A.

SM6-36 includes a wide range of functional units to meet secondary distribution application needs.

- IM - 630A load break/fault make switch
- QM - 630A fuse-switch combination
- DM1 - SF1 630A circuit breaker
- GBC - medium voltage metering
- NSM - 630A auto-changeover

Electrical characteristics

Rated voltage	Ur	kV		36
Insulation level				
Power frequency withstand	Ud	50Hz, 1 min (kV rms)		70
Lighting impulse withstand	Up	1.2/50 µs (kV peak)		170
Rated current				
Rated busbar current	In	A		630 - 1250
Short-time withstand current	Ith	kA/1s	25	1250
			20	630 - 1250
			16	630 - 1250

Main characteristics

Internal arc withstand

- 3 side protection: 16kA/1s, A-FL
  In accordance with AS 62271-200

Protection index

- Air insulated switchgear (AIS)
- Class: PI (insulating partition)
- Loss of service continuity class: LSC2A
- Units in switchboard: IP3X
- Between compartments: IP2X

Applications

- Commercial, industrial, mining and public distribution
- Network protection – Sepam or MiCOM
- Intelligent networks - remote management and monitoring

Visibility of main contact and analogue manometer

SM6-36 is now available with a viewing window for visibility of the main contact and an analogue manometer to monitor SF6 pressure.

Viewing window

Manometer

For more info:
Catalogue:
AMTED308055EN

Auto Transfer System
Application: Refer page 95

Secondary Distribution Switchgear DVCAS

Modular secondary distribution switchgear for wind farms

DVCAS

DVCAS

Overview

DVCAS is an indoor, modular gas insulated switchgear (GIS) intended for the MV section of compact MV/LV substations for wind application, with a service voltage up to 36kV / 630A. The busbar system is interconnected between functions by means of single-phase coupling bushings made of screened elastomeric insulation.

Extensibility

- RE – right side extensible
- LE – left side extensible
- DE – double extensible

Functional units

- I – switch disconnector
- D – circuit breaker protection for transformer
- O – direct bus connection
- T – Earthing disconnector
- DB – double cable connection

Electrical characteristics

Rated voltage	Ur	kV		36
Insulation level				
Power frequency withstand	Ud	50Hz, 1 min (kV rms)		70
Lighting impulse withstand	Up	1.2/50 µs (kV peak)		170
Rated current				
Rated busbar current	In	A		630
Short-time withstand current	Ith	kA/3s	20	630

Main characteristics

Internal arc withstand

- 3 side protection: 20kA/1s, A-FL in accordance with AS 62271-200

Protection index

- Gas insulated switchgear (GIS)
- Class: PM (metallic partition)
- Tank: IP67
- Switchboard: IP3X
- Between compartments: IP2X

Applications

- Wind farms
- Prefabricated MV/LV substations - KPX
- Intelligent networks - remote management and monitoring
- Network protection – Sepam S10/VIP 4X

Sepam 10

Sepam Series 10 Protection Relay

Protects against phase to phase faults and Earth faults, capable of detecting Earth faults from 0.2 A. Communication option available. Simple to install and setup without the need of a computer.

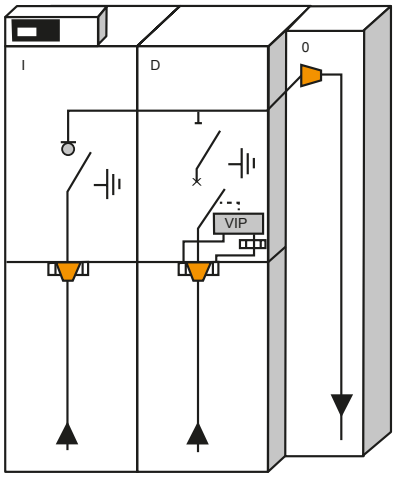

For more info:
Catalogue:
AMTED398032EN

Auto Transfer System
Application: refer page 95

Ring Main Unit (RMU)
RM6

Ring main unit for secondary distribution applications

Compact 3 Function RM6

Extended RE-II - DE-BC - DE-Mt - DE-D configuration

Overview

RM6 is an indoor, compact gas insulated switchgear (GIS) intended for the MV section of compact MV/LV substations and customer distribution substations, with a service voltage up to 24kV / 630A.

RM6 range includes a number of compact and modular functional units for secondary distribution needs.
RM6 Free Combination is a new range extension and allows a higher configuration flexibility of switchboards to meet all needs:

- Free choice of functions and options
- Compatible with standard RM6 offer
- Tanks including 2 to 3 free choice functions
- More economical compared to several single extension function in line.

Functional units

- I – switch disconnector
- Q – fuse-switch combination
- D – 200A circuit breaker
- B – 630A circuit breaker
- Mt – MV metering
- IC – network coupling with switch disconnector
- BC – network coupling with circuit breaker
- O – direct busbar connection

Extensibility

- NE – non-extensible
- RE – right side extensible
- LE – left side extensible
- DE – double extensible

Electrical characteristics (RM6)

Rated voltage	Ur	kV	12	17.5	24			
Insulation level								
Power frequency withstand	Ud	50Hz, 1 min (kV rms)	28	38	50			
Lighting impulse withstand	Up	1.2/50 µs (kV peak)	75	95	125			
Rated current								
Rated busbar current	In	A	630	630	400		630	
Short-time withstand current	Ith	kA/1s	25	21	12.5	16	16	20
		kA/3s		21	-	-	-	20
Rated current at elevated ambient temperature								
		Deg C	40	45	50	55	60	
Busbar 630A		A	630	575	515	460	425	
Busbar 400A		A	400	400	400	400	-	
Functions I,O,B with C bushing		A	630	575	515	460	425	
Functions D with C or B bushing		A	200	200	200	200	200	

Main characteristics

Internal arc withstand

- 3 side protection: 20kA/1s, A-FL in accordance with AS 62271-200

Protection index

- Gas insulated switchgear (GIS)
- Class: PM (metallic partition)
- Tank: IP67
- Switchboard: IP3X
- Between compartments: IP2X

Applications

- Commercial, industrial, mining and public distribution
- Prefabricated MV/LV substations - KPX
- Network automation – ATS 1/2
- Remote management and monitoring (Easergy T200)
- Network protection – Sepam S10/VIP 4X

700 possible combinations for RM6 Free Combination 2 or 3 functions

Possible combinations of RM6 2 functions

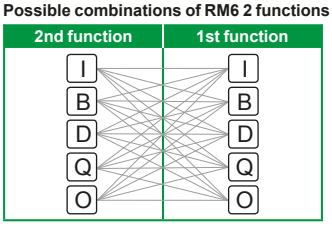

Type of tank:
- **NE**: non-extensible
- **RE**: extensible to the right
- **LE**: extensible to the left
- **DE**: extensible to the right and left.

Possible combinations of RM6 3 functions

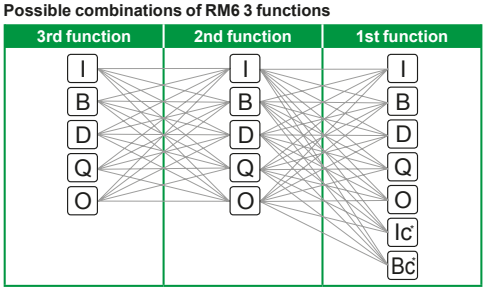

(*) Possible only when RM6 is RE or DE.
Consult Schneider Electric for availability.

Ring Main Unit (RMU) FBX

Ring main unit for secondary distribution applications

FBX

FBX-C in MV/LV substation

FBX with fuse protection

Overview

FBX is an indoor, compact sulphur hexafluoride (SF_6) insulated ring main unit for secondary distribution applications with a service voltage up to 24kV / 630A.

FBX range includes a number of compact and modular functional units for secondary distribution needs.

FBX-C Version (compact)

- 2 ,3 or 4 functions

FBX-E Version (extensible)

- 1, 2 ,3 or 4 functions

Functional units

- C – feeder with switch disconnector
- T1 – feeder with switch disconnector and fuses
- T2 – feeder with vacuum circuit breaker
- R – direct incoming
- Sb – busbar switch disconnector
- RE - busbar riser with Earthing switch
- CB- outgoing feeder with vacuum circuit breaker
- M – metering panel

Electrical characteristics

Rated voltage	Ur	kV	12	17.5	24
Insulation level					
Power frequency withstand	Ud	50Hz, 1 min (kV rms)	28	38 (42)	50
Lighting impulse withstand	Up	1.2/50 µs (kV peak)	75	95	125
Rated current					
Rated busbar current	In	A	630 / 1250*		
Short-time withstand current	Ith	kA/1s	16 / 21 / 25*	16 / 21	16 / 21
*please consult Schneider Electric		kA/3s	16 / 21	16 / 21	16 / 21

Main characteristics

Internal arc withstand

- 3 side protection: 20kA/1s, A-FL in accordance with AS 62271-200

Protection index

- Gas insulated switchgear (GIS)
- Class: PM (metallic partition)
- Tank: IP67
- Switchboard: IP2X (option: IP33)
- Between compartments: IP2X

Applications

- Commercial, industrial, mining and public distribution
- Prefabricated MV/LV substations
- Remote management and monitoring (Easergy T200)

Simple erection and assembly

The extension is a very simple process thanks to:

- The A-link device used to connect the busbars of two cubicles. Variations in positioning are compensated by fixed, spherical contacts and mobile couplings that can be adjusted axially and radially.
- Highly secure dielectric seals made with silicone insulating conical connectors adapted to the electrical voltage. The assembly of the insulating connectors is maintained by a mechanical force generated by:
- Integrated guiding pins for the correct alignment of the cubicles
- An assembly by bolts secured by mechanical stops.

During the assembly of an extension cubicle, an additional space of at least 450 mm is necessary to allow for handling.

A-Link

For more info:
Catalogue:
SDISYS0010201

Ring Main Unit (RMU) Flusarc 36

Ring main unit for secondary distribution applications

Flusarc 36

Outdoor Version

Flusarc 36

Overview

Flusarc 36 is a sulphur hexafluoride (SF_6) insulated ring main unit for secondary distribution applications with a service voltage up to 36kV / 630A. It is available for both indoor and outdoor uses, in compact and modular versions.

Flusarc 36 range includes a number of compact and modular functional units for secondary distribution needs.

Functional units

- C – feeder with switch disconnector
- T1 – feeder with switch disconnector and fuses
- R – direct incoming
- CB – outgoing feeder with vacuum circuit breaker

Electrical characteristics

Rated voltage	Ur	kV	36
Insulation level			
Power frequency withstand	Ud	50Hz, 1 min (kV rms)	70
Lighting impulse withstand	Up	1.2/50 µs (kV peak)	170
Rated current			
Rated busbar current	In	A	630 / 1250**
Short-time withstand current	Ith	kA/1s	16 / 20*

*please consult Schneider Electric
**with external busbar solution

Main characteristics

Internal arc withstand

- 3 side protection: 20kA/1s, A-FL
  In accordance with AS 62271-200

Protection index

- Gas insulated switchgear (GIS)
- Class: PM (metallic partition)
- Tank: IP67
- Switchboard: IP3X
- Between compartments: IP3X

Applications

- Commercial, industrial, mining and public distribution.
- Intelligent networks - remote management and monitoring (PACiS)
- Protection unit - VIP400/VIP410

The disconnector's three positions are:

a. service position
b. isolated position
c. Earthing position
(in this condition it is possible to access the cables compartment, in order to carry out maintenance or to install cables themselves)

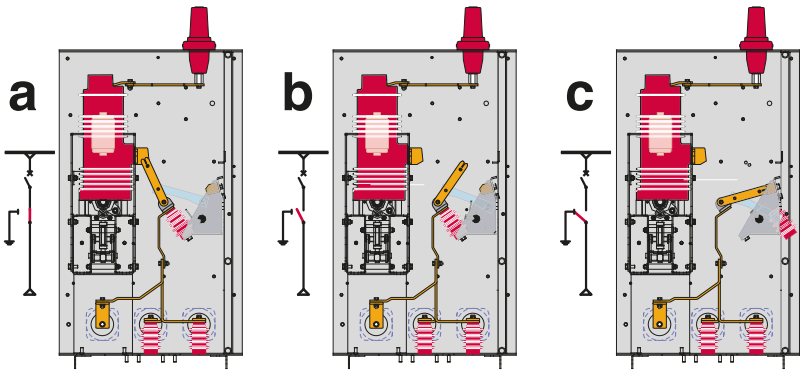

For more info:
Catalogue:
AMTED399086EN

Auto Transfer System
Application: refer page 95

Ring Main Unit (RMU)
Ringmaster C

Ring main unit for secondary distribution application

RN2C

Ringmaster C

Overview

Ringmaster is an outdoor, compact gas insulated switchgear (GIS) intended for the MV section of compact MV/LV substations with a service voltage up to 13.8kV / 630A.

Ringmaster range includes a number of compact and modular functional units for secondary distribution needs.

- RN2c – 200A non-extensible ring main unit
- RE2c – 200A extensible ring main unit
- RN6c – 630A non-extensible ring main unit
- MU2 – 200A feeder metering unit
- CN2 – 200A non-extensible circuit breaker
- SN6 – 630A non-extensible switch
- CE2 – 200A extensible circuit breaker
- CE6 – 630A extensible circuit breaker
- SE6 – 630A extensible switch

Electrical characteristics

Rated voltage	Ur	kV		12	13.8
Insulation level					
Power frequency withstand	Ud	50Hz, 1 min (kV rms)		20	28
Lighting impulse withstand	Up	1.2/50 µs (kV peak)		75	95
Rated current					
Rated busbar current	In	A		630	
Short-time withstand current	Ith	kA/3s	16	200 - 630	-
			21	-	200 - 630

Main characteristics

Internal arc withstand

- 3 side protection: 21kA/1s, A-FLR (gas enclosure only)

Protection index

- Air insulated switchgear (AIS)
- Class: PM (metallic partition)
- Tank: IP67
- Switchboard: IP54
- Between compartments: IP2X

Applications

- Outdoor harsh environments: mining, oil and gas, industry.
- Prefabricated MV/LV substations – KPX
- Network automation – ATS 1/2
- Remote management and monitoring (Easergy T200)
- Network protection – Sepam S10/VIP

Sepam Series 10 Protection Relay

Protects against phase to phase faults and Earth faults; capable of detecting Earth faults from 0.2 A. Communication option available. Simple to install and set up without the need of a computer.

Ringmaster mounted on galvanised plinth

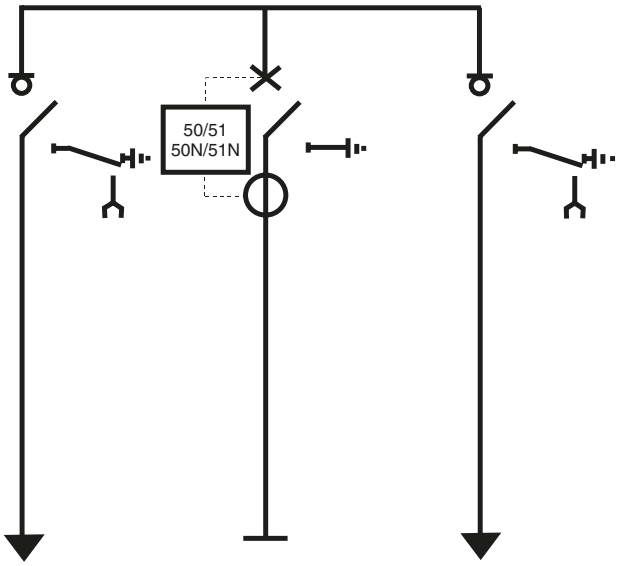

Primary Distribution Switchgear MCset 1-2-3

Modular primary distribution switchgear

MCset 1-2-3 with Motorpact

MCset 1-2-3

Overview

MCset 1-2-3 is an indoor, metal-enclosed withdrawable circuit breaker sulphur hexafluoride (SF_6) or vacuum switchgear intended for the MV section of HV/MV substations and high-power MV/MV substations with a service voltage up to 17.5kV / 4000A.

MCset 1-2-3 includes a wide range of functional units to answer primary distribution application needs.

- AD - incomer or feeder
- CL-GL - line up bus section
- TT - busbar metering and Earthing
- DI - switch-fuse feeder
- RD - direct incomer

Electrical characteristics

Rated voltage	Ur	kV		7.2	12	17.5
Insulation level						
Power frequency withstand	Ud	50Hz, 1 min (kV rms)		20	28	38
Lighting impulse withstand	Up	1.2/50 µs (kV peak)		60	75	95
Rated current						
Rated busbar current	In	A		1250 - 2500 - 3150 - 4000		
Short-time withstand current	Ith	kA/3s	25	1250 - 2500 - 3150 - 4000		
			31.5	1250 - 2500 - 3150 - 4000		
			40	1250 - 2500 - 3150 - 4000		
			50	1250 - 2500 - 3150 - 4000		

Main characteristics

Internal arc withstand

- 3 side protection: 50kA/1s, A-FL
- 4 side protection: 50kA/1s, A-FLR
  In accordance with AS 62271-200

Protection index

- Air insulated switchgear (AIS)
- Class: PM (metallic partition)
- Loss of service continuity classes: LSC2B
- Units in switchboard: IP3X (IP4X)
- Between compartments: IP2X

Applications

- Public distribution, heavy industry, oil and gas, infrastructure
- Marine
- Motor control - Motorpact
- Thermal monitoring
- Network protection - Sepam
- Intelligent networks - remote management and monitoring (Powerlogic SCADA)

Thermal Diagnosis System (MDT)

The Thermal Diagnosis System is used to monitor temperature rise using optical fibres and sensors installed at the heart of the sensitive areas. By using this system, the maintenance costs in MV substations are greatly reduced.

Thermal Diagnosis System

Primary Distribution Switchgear MCset 4

Modular primary distribution switchgear

MCset 4

Overview

MCset 4 is an indoor, metal-enclosed withdrawable circuit breaker sulphur hexafluoride (SF_6) switchgear intended for the MV section of HV/MV substations and high-power MV/MV substations, with a service voltage up to 24kV / 2500A.

MCset 4 includes a wide range of functional units to accommodate primary distribution application needs.

- AD - incomer or feeder
- CL-GL - line up bus section
- TT - busbar metering and Earthing
- DI - switch-fuse feeder
- RD - direct incomer

Electrical characteristics

Rated voltage	Ur	kV		24
Insulation level				
Power frequency withstand	Ud	50Hz, 1 min (kV rms)		50
Lighting impulse withstand	Up	1.2/50 µs (kV peak)		125
Rated current				
Rated busbar current	In	A		630 - 1250 - 2500
Short-time withstand current	Ith	kA/3s	16	630 - 1250 - 2500
			25	630 - 1250 - 2500
		kA/1s	31.5	630 - 1250 - 2500

MCset 4

Main characteristics

Internal arc withstand

- 3 side protection: 25kA/1s or 31.5kA/0.15s, A-FL
- 4 side protection: 25kA/1s or 31.5kA/0.15s, A-FLR in accordance with AS 62271-200

Protection index

- Air insulated switchgear (AIS)
- Class: PM (metallic partition)
- Loss of service continuity classes: LSC2B
- Units in switchboard: IP3X (IP4X)
- Between compartments: IP2X

Applications

- Public distribution, heavy industry, oil and gas, infrastructure.
- Marine
- Motor control - Motorpact
- Thermal monitoring
- Network protection – Sepam
- Intelligent networks - remote management and monitoring (Powerlogic SCADA)

Arc detection system VA1DA

The arc detection system is a state-of-the-art arc protection unit for electrical power distribution systems. The system consists of an arc protection unit and a light sensitive arc sensor that offers addition protection alongside traditional overcurrent measurements.

Arc protection unit

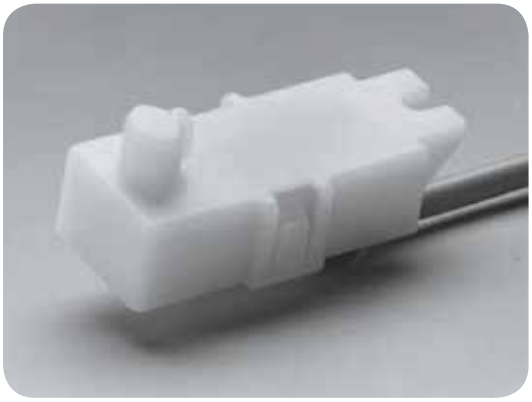

Arc sensor VA1DA

Primary Distribution Switchgear
PIX Compact with Roll On Floor Circuit Breaker

Compact modular primary distribution switchgear

PIX Compact roll on floor

Roll on Floor circuit breaker

Overview

PIX with roll on floor circuit breaker design provides an easy rack-in/rack-out option without the need for a separate breaker trolley, while offering all the features of the standard PIX family up to 17.5kV/2500A.

There are four different panel variants:

- CB - feeder panel with HVX circuit breaker and optional voltage transformer (≤1250A)
- BC CB - busbar section coupler panel with HVX circuit breaker and optional current transformer and Earth switch (2000/2500A)
- RMT - busbar riser panel with optional voltage transformer
- MT BBE - busbar metering panel with voltage transformer and busbar Earth switch

Electrical characteristics

Rated voltage	Ur	kV	12	17.5
Insulation level				
Power frequency withstand	Ud	50Hz, 1 min (kV rms)	28	38
Lighting impulse withstand	Up	1.2/50 µs (kV peak)	75	95
Rated current				
Rated busbar current	In	A	2500	2500
Short-time withstand current	Ith	kA/3s	25/31.5/40	25/31.5/40

Main characteristics

Internal arc withstand

- 4 sided protection: 40kA/1s, A-FLR in accordance to AS62271-200

Protection index

- Air insulated switchgear (AIS)
- Class: PM (metallic partition)
- Loss of service continuity class: LSC2B
- Units in switchboard: IP4X*

Applications

- Public distribution
- Network protection - Sepam, MiCOM or Gemstart
- Intelligent networks - remote management and monitoring

Compact design

Compact dimensions start with a 600mm wide cubicles for ratings up to 1250A and 800mm wide cubicles for ratings up to 2500A, up to 17.5kV.

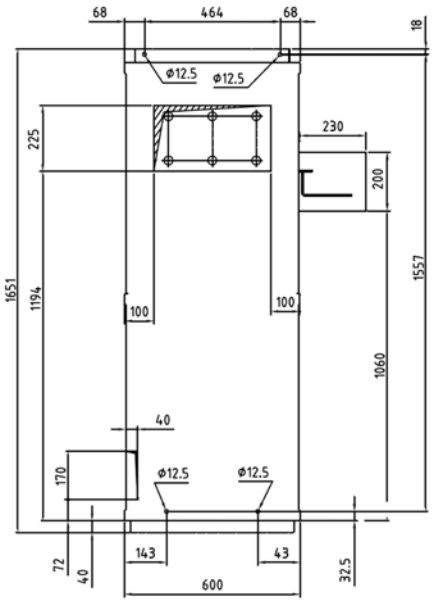

Standard ground plan for PIX Compact

Primary Distribution Switchgear
PIX

Modular primary distribution switchgear

PIX standard

PIX switchboard

HVX vacuum circuit breaker

CVX 12 fused vacuum contactor

Overview

PIX is an indoor, metal-enclosed withdrawable circuit breaker sulphur hexafluoride (SF6) or vacuum switchgear intended for the MV section of HV/MV substations and high-power MV/MV substations with a service voltage up to 24kV / 2500A.

The innovative PIX family consists of:

- PIX Compact - 17.5kV, 31.5kA, 2500A single busbar
- PIX - up to 24kV, 31.5kA, 2500A single busbar
- PIX High - 17.5kV, 50kA, 5000A single busbar
- PIX MCC - 7.2kV, 50kA, 400A single busbar
- PIX 2B - 17.5kV, 25kA, 3150A double busbar.

Electrical characteristics

Rated voltage	Ur	kV	12	17.5	24
Insulation level					
Power frequency withstand	Ud	50Hz, 1 min (kV rms)	28	38	50
Lighting impulse withstand	Up	1.2/50 µs (kV peak)	75	95	125
Rated current					
Rated busbar current	In	A	3150/4000*		2500
Short-time withstand current	Ith	kA/3s	40		31.5

*with forced ventilation

Main characteristics

Internal arc withstand

- 3 side protection: 40kA/1s, A-FL
- 4 side protection: 40kA/1s, A-FLR in accordance with AS 62271-200

Protection index

- Air insulated switchgear (AIS)
- Class: PM (metallic partition)
- Loss of service continuity classes: LSC2B
- Units in switchboard: IP3X (IP4X)
- Between compartments: IP2X

Applications

- Public distribution, heavy industry, oil and gas, infrastructure
- Marine
- Motor control – PIX MCC
- Network protection – Sepam, MiCOM or Gemstart
- Intelligent networks – remote management and monitoring (PACiS)

Remote racking and remote Earth switch operation

A fully-integrated remote racking solution can be provided by Schneider Electric to ensure operator safety and peace of mind. Electrical, mechanical and key interlocking options can be specified by the customer for their specific application along with wired and wireless options. The Earth switch of the PIX panel can also be motorised to provide another level of operator safety.

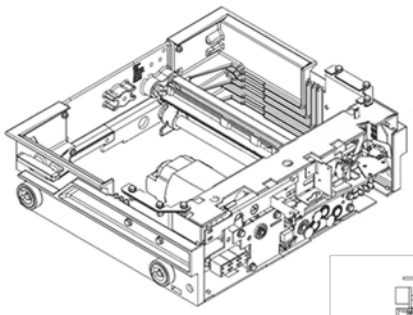

Pix motorised racking

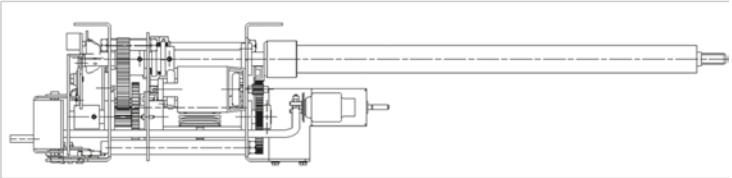

PIX Earth switch motorised operating part.

Primary Distribution Switchgear GenieEvo

Modular primary distribution switchgear

GenieEvo

Overview

GenieEvo is an indoor, metal-enclosed fixed circuit breaker vacuum switchgear intended for the MV section of MV/LV substations and MV/MV substations, with a service voltage up to 17.5kV / 2500A.

GenieEvo includes a wide range of functional units to accommodate primary distribution application needs.

- VC - circuit breaker
- VB - bus section
- BBM - busbar metering
- P1 to P18 - type of protection

Electrical characteristics

Rated voltage	Ur	kV		12	13.8
Insulation level					
Power frequency withstand	Ud	50Hz, 1 min (kV rms)		28	38
Lighting impulse withstand	Up	1.2/50 µs (kV peak)		75	95
Rated current					
Rated busbar current	In	A		630 - 1250 - 2000 - 2500	630 - 1250
Short-time withstand current	Ith	kA/3s	25	200 - 630 - 1250 - 2000 - 2500	200 - 630 - 1250

GenieEvo

Main characteristics

Internal arc withstand

- 3 side protection: 25kA/1s, A-FL
- 4 side protection: 25kA/1s, A-FLR in accordance with AS 62271-200

Protection index

- Air insulated switchgear (AIS)
- Class: PM (metallic partition)
- Loss of service continuity classes: LSC2A
- Units in switchboard: IP3X (IP4X)
- Between compartments: IP2X

Applications

- Public distribution, heavy industry, oil and gas, infrastructure.
- Network protection – Sepam
- Intelligent networks – remote management and monitoring (Powerlogic SCADA)

GenieEvo

Minimising maintenance operations

GenieEvo is a vacuum MV switchgear with virtually maintenance-free operation. Unlike conventional vacuum switchgear, the isolators in GenieEvo are sealed in an Earth-screened cast resin enclosure containing controlled air, which eliminates the need for regular cleaning of the copper contacts throughout the product's entire life. Primary connections and busbar are also solid insulated.

Primary Distribution Switchgear
Fluair F400

Modular primary distribution switchgear

Fluair F400 with SF range circuit breaker

F400

Overview

Fluair F400 is an indoor, metal-enclosed withdrawable circuit breaker sulphur hexafluoride (SF_6) switchgear intended for the MV section of HV/MV substations and MV/MV substations, with a service voltage up to 40.5kV / 2500A.

Fluair F400 includes a wide range of functional units to accommodate primary distribution application needs.

- AD6-RD6 - incomer or feeder
- CL6-GL6 - line up bus section
- TT6 - busbar metering and Earthing
- LB6 - busbar metering

Electrical characteristics

Rated voltage	Ur	kV		36	40.5
Insulation level					
Power frequency withstand	Ud	50Hz, 1 min (kV rms)		70	95
Lighting impulse withstand	Up	1.2/50 µs (kV peak)		170	185
Rated current					
Rated busbar current	In	A		1250 - 2500	1250
Short-time withstand current	Ith	kA/3s	25	1250 - 2500	1250
			31.5	1250 - 2500	1250
			40	1250 - 2500	

Main characteristics

Internal arc withstand

- 3 side protection: 25kA/1s or 31.5kA/0.5s or 40kA/0.15s, A-FL
- 4 side protection: 25kA/1s or 31.5kA/0.5s or 40kA/0.15s, A-FLR
  in accordance with AS 62271-200.

Protection index

- Air insulated switchgear (AIS)
- Class: PM (metallic partition)
- Loss of service continuity classes: LSC2B
- Units in switchboard: IP3X (IP4X)
- Between compartments: IP2X

Applications

- Network protection – Sepam
- Intelligent networks - remote management and monitoring (PowerLogic SCADA)

Composition of an F400 switchboard

F400 switchboards are made up of several interconnected functional units. A single busbar is used to connect the power between functional units within a switchboard. The permanent electrical continuity of all the metal frames is provided by connecting the Earthing busbar of each functional unit to the main Earthing circuit of the switchboard. Low voltage wiring trays run across the switchboard above the LV compartments. LV cables can enter the switchboard through the top or bottom of each functional unit.

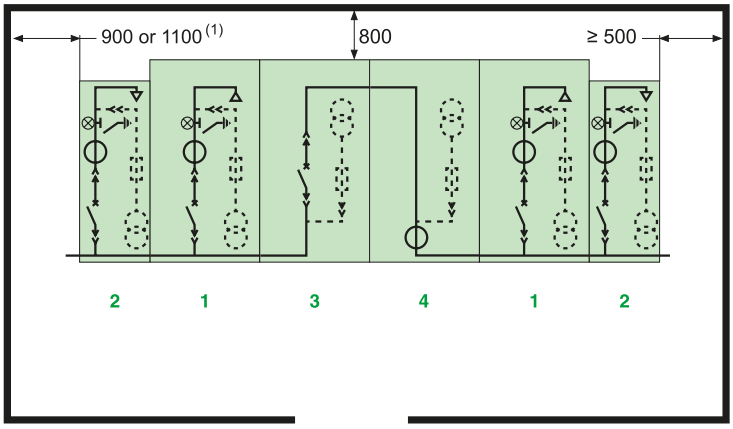

Primary Distribution Switchgear VOX

SF_6 outdoor circuit breaker for outdoor switchyard

VOX

Overview

VOX is a sulphur hexafluoride (SF_6) insulated vacuum circuit breaker intended for use in medium voltage outdoor switching yards up to 38kV / 2000A.

Main characteristics

Classification

- Mechanical endurance: 10000 CO or 20 years
- Electrical endurance: 10000 CO at rated nominal current In accordance with IEC 62271-100

Applications

- Outdoor switching yards
- Protection of transformers
- Protection of capacitors

3

EPDM polymer bushings

The bushings are designed with an electric conducting part made of copper, which is insulated with EPDM polymer. EPDM bushings allow a good resistance against mechanical or electrical shock. Their high mechanical strength reduces the risk of damage during handling and installation or maintenance. The EPDM polymer also offers the advantage over porcelain that small projectiles and other minor shocks do not cause any chipping. This flexibility also gives them a high resistance to vandalism or accidental damage, and their generally inert properties make them ideal for severe climatic and pollution conditions.

1 *Busbar terminals*
2 *Vandal-proof EPDM bushings*
3 *Stainless steel tank - SF_6 filled*
4 *Vacuum interrupter*
5 *Bellows*
6 *Aluminium enclosure*
7 *Gland plate*
8 *Trip / close mechanical push-buttons*
9 *Circuit breaker with spring charging mechanism*
10 *CT cover (CT covers on all 6 bushings)*

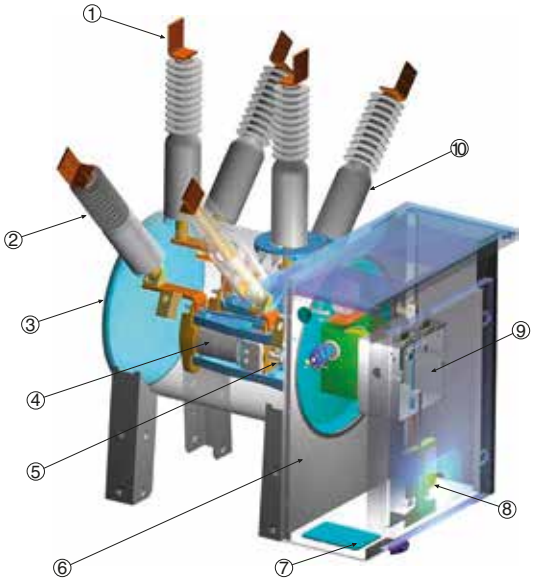

Outdoor Housing

Enclosures

Overview

As a market leader in outdoor enclosures, Schneider Electric can provide housing solutions for modular switchgear (SM6), ring main units (RM6) and power factor correction applications. Distributed from our Transformer Solutions factory, these enclosures protect and extend the life of the electrical equipment. Available in mild steel, stainless steel and marine grade aluminium, Schneider Electric is able to supply the right enclosure for your application.

Modular switchgear application

This photograph shows a typical HV intake substation, where SM6 is installed within an outdoor enclosure. The photograph also illustrates a meter box on the outside where the Supply Authority mount its kWh meters to monitor power consumption. This arrangement is sold in most Australian states and territories and is available in 4 to 13-way configurations.

Ring main unit application

This photograph shows a RM6 switching station in an outdoor enclosure and is available in 2 to 6-way configurations. The RM6 / outdoor enclosure combination is popular with all market sectors, as it provides a compact switching arrangement at a cost-effective price.

Power factor correction application

This photograph depicts a special stainless steel enclosure for mining applications. It contains capacitor banks for power factor correction and Rollarc contactors.

For more info:
Brochure: 22929

Electrical Houses
E-House Solutions

Transformer and prefabricated substations

E-House delivered onsite

Mobile Substation

Overview

E-house Solutions integrate major power and control equipment into prefabricated buildings.

Incorporated inside an E-House are switchgear, transformers, motor control, HVAC, lighting and security for all business operations. Schneider Electric can provide civil, mechanical and electrical expertise to custom fabricate E-Houses that are easy to install and maintain.

Main characteristics

Modular design
E-Houses are adapted to local and industrial conditions.
E-Houses are flexible in design and can be upgraded with rear access doors, expandable walls, space saving design and are stackable, with a robust construction.

Safety & quality
Every E-House is pre-assembled in a controlled environment, ensuring personal safety. Easily integrated, they provide maximum protection for equipment and are environmentally friendly.

Reduced costs
Your E-House will reduce the costs of your on-site construction and electrical equipment installations. All equipment is pre-installed, tested and ready to use when it is delivered.

Design considerations
- Site area limitations
- MV / LV segregation
- HVAC heat loadings and locations
- Switchgear positioning – heat distribution
- Pad mount systems / ductings / return air flow
- Split system mountings
- Lighting and emergency lighting – internal and external
- 2 hr fire ratings – wall, floor, etc.
- Cabling considerations – e.g. transformer locations
- Ongoing maintenance – access to replace equipment
- Pressurisation – use of airlocks
- Allowances for future equipment
- Building Code of Australia – e.g. egress paths and exits
- Australian Standards – e.g. AS3000 = 600mm clearance
- All stakeholders – e.g. operators, local shire

Applications

- Heavy Industry
- MMM (mine mineral metal)
- Oil and gas
- Primary Substations
- Railway

Lifecycle

Remote equipment
View all equipment in real time
Receive instant problem notification
Analyse and improve energy efficiency

Extensive support services
One point of contact
Project management – from conception to completion
Consultation and maintenance services
Optimisation of costs
Reduced installation time
Complete safety of operation
Total service over the lifetime of the installation.

For more info:
Brochure:
22929

Electrical Houses
E-House Solutions

Transformer and prefabricated substations

E-House with heat loading redundancy

E-House for the Water Industry with Motorpact Soft Starters

Product information

Typical equipment that can be included in an E-House include:

Electrical distribution products

LV/MV switchgear, MCC, metering, protection and transformers (liquid immersed and dry-type).

Automation and control products

Motor control and protection, variable speed drives and soft starters, control and signalling components, pressure and vacuum switches, position sensors, components for machine safety, automation, software,HMI and SCADA.

Installation and wiring products

Switches and outlets, cable management systems, wiring accessories, industrial switchgear and lighting.

Critical power products

UPS, AC/DC batteries and chargers.

IT infrastructure products

Data racks, network switches.

Building services

HVAC systems and controls, security and surveillance, access control, supervisory software.

Project engineering and management

Project management, Australian Standards compliance, logistics.

Services

Installation, pre-commissioning, maintenance, spare parts, training.

Customer benefits

Customised and scalable

Your E-House will be customised to the specific power and environmental needs of your project. The panel design makes it easily adaptable for the equipment layout you require, and simplifies any future expansion.

Reduce your costs

Your E-House will reduce the costs of on-site construction and electrical equipment installations. All equipment is pre-installed, tested and ready to use when it is delivered.

Save time

As you no longer have to worry about the logistics of constructing an electrical building on site, considerable time savings will be made on your project. E-Houses are pre-assembled and tested in the factory before shipment, saving on-site commissioning costs and time.

Better use of space

Our E-House solutions save space compared to block buildings, giving you more options for efficient positioning. Have easier access to electrical equipment without the need for additional building space

For more info:
Catalogue:
67035_GMA_EN
GMA EN

GIS-Type Metal-Enclosed Switchgear GMA

Modular primary distribution switchgear

GMA

GMA switchboard

Overview

GMA is an indoor, metal-enclosed sulphur hexafluoride (SF_6) switchgear with insulated single busbar arrangement intended for MV the section of HV/MV substations and MV/MV substations, with a service voltage up to 24kV / 1250A.

GMA includes a wide range of functional units to accommodate primary distribution application needs.

- C - Switch-disconnector with Earthing switch
- T1 - Switch-disconnector with fuses and Earthing switch
- CB6 - Switch disconnector with circuit breaker (630A) and Earthing switch
- CB12 - Disconnector with circuit breaker (1250A) and Earthing switch
- BB-VT - Busbar module with plug-in and optional disconnectable VT

Electrical characteristics

Rated voltage	Ur	kV	12	17.5	24
Insulation level					
Power frequency withstand	Ud	50Hz, 1 min (kV rms)	28	38	50
Lighting impulse withstand	Up	1.2/50 µs (kV peak)	75	95	125
Rated current					
Rated busbar current	In	A	2500		
Short-time withstand current	Ith	kA/3s	31.5		

Main characteristics

Internal arc withstand

- 3 side protection: 31.5kA/1s, A-FL
- 4 side protection: 31.5kA/1s, A-FLR
  In accordance with AS 62271-200

Protection index

- Gas insulated switchgear (GIS)
- Class: PM (metallic partition)
- MV compartment: IP65
- Units in switchboard: IP3X
- Between compartments: IP2X

Applications

- Public distribution, heavy industry, oil and gas, and mining
- Marine
- Network protection – Sepam, MiCOM or Gemstart
- Intelligent networks - remote management and monitoring (PACiS)

Efficient, compact and powerful

- GMA switchgear and control gear requires 25% less floor space and 30% less air space than existing gas insulated switchgear and control gear in the same performance class
- Outgoing switchgear cubicles with currents up to 800A can be designed with a module width of just 450mm
- Incoming switchgear cubicles with currents 1600A up to 2500A are only 800mm wide
- The bus sectionaliser with vacuum circuit breakers of 1600A to 2500A and integrated busbar have a module width of only 1000mm, and corresponding bus sectionaliser up to 1250A of only 800mm
- No gas work at site
- Feeder can be changed out of the switchgear row
- Screen of busbar system is Earthed (touch-proof)
- Simple and fast installation
- Busbar CTs can be installed without extra feeder width

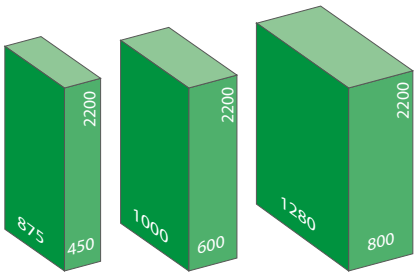

GMA panel dimensions

For more info:
Catalogue:
69821_GHA EN
GHA EN

GIS-Type Metal-Enclosed Switchgear GHA

Modular primary distribution switchgear

Single busbar GHA

Double busbar GHA

IDIS display for circuit breaker panel with single busbar

Overview

GHA is an indoor, metal-enclosed sulphur hexafluoride (SF_6) switchgear with insulated single or double busbar arrangement intended for MV the section of HV/MV substations, and MV/MV substations with a service voltage up to 40.5kV / 2500A.

GMA includes a wide range of functional units to accommodate primary distribution application needs.

- Circuit breaker panels for incoming and outgoing feeders
- Outgoing voltage transformer with isolating device on HV side and transformer Earthing feature
- Bus couplers
- Bus section couplers with circuit breaker including busbar risers
- Bus section couplers and bus couplers with integrated busbar Earthing
- Bus risers without switching devices
- Bus sectionaliser panels with two/three-position disconnector
- Metering panels with current and/or voltage transformer

Electrical characteristics

Rated voltage	Ur	kV	12	17.5	24	36	40.5
Insulation level							
Power frequency withstand	Ud	50Hz, 1 min (kV rms)	28	38	50	70	80
Lighting impulse withstand	Up	1.2/50 µs (kV peak)	75	95	125	170	185
Rated current							
Rated busbar current	In	A	2500				
Short-time withstand current	Ith	kA/3s	40				31.5

Main characteristics

Internal arc withstand

- 3 side protection: 40kA/1s, A-FL
- 4 side protection: 40kA/1s, A-FLR in accordance with AS 62271-200

Protection index

- Gas insulated switchgear (GIS)
- Class: PM (metallic partition)
- MV compartment: IP65
- Units in switchboard: IP3X
- Between compartments: IP2X

Applications

- Public distribution, heavy industry, oil and gas, and mining
- Marine
- Network protection – Sepam, MiCOM or Gemstart
- Intelligent networks – remote management and monitoring (PACiS)
- Gas density monitoring - IDIS

B-link

The busbars of each GHA switchgear panel are installed in separated gas-filled compartments. They are independent of external environmental influences and integrated into the insulating gas monitoring system. The connection of the busbars from adjacent panels is established via our innovative busbar link system: B-link.

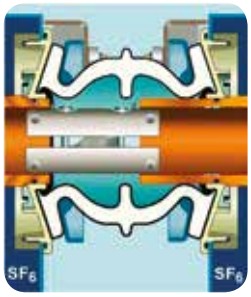

Benefits of the B-link system include:

- enabling assembly without gas work on site
- extensions or panel replacements within the panel assembly are possible without gas handling and without interference in the gas filled compartments
- after disassembly of a B-link system between adjacent panels; an isolating distance can be established to form separate busbar sections without gas handling
- if necessary, the resistance can be measured separately for each busbar section, for a complete busbar system or for a panel.

GIS-Type Metal-Enclosed Switchgear WI

Modular primary distribution switchgear

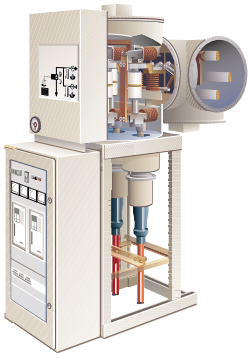

WIA

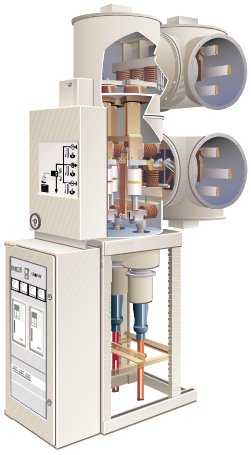

WIB

WIR

Overview

WI is an indoor, metal-enclosed sulphur hexafluoride (SF_6) switchgear with insulated single or double busbar arrangement intended for MV the section of HV/MV substations, and MV/MV substations with a service voltage up to 52kV / 2500A.

WI includes a wide range of functional units to accommodate primary distribution application needs.

WIA (single busbar)

- Circuit breaker panel
- Disconnector panel
- Bus section coupler

WIB (double busbar)

- Circuit breaker panel
- Bus section coupler
- Bus coupler (transverse)
- Metering panel

Electrical characteristics

Rated voltage	Ur	kV	12	17.5	24	36	52	±27.5*
Insulation level								
Power frequency withstand	Ud	50Hz, 1 min (kV rms)	28	38	50	70	95	95
Lighting impulse withstand	Up	1.2/50 µs (kV peak)	75	95	125	170	200	250
Rated current								
Rated busbar current	In	A	2500					
Short-time withstand current	Ith	kA/3s	40				31.5	25

*1-phase or 2-phase version

Main characteristics

Internal arc withstand

- 3 side protection: 40kA/1s, A-FL in accordance with IEC60298

Protection index

- Gas insulated switchgear (GIS)
- Class: PM (metallic partition)
- MV compartment: IP65
- Units in switchboard: IP3X
- Between compartments: IP2X

Applications

- Public distribution, heavy industry, oil and gas, and mining
- Railway
- Network protection – Sepam, MiCOM or Gemstart
- Intelligent networks – remote management and monitoring (PACiS)
- Gas density monitoring - IGIS

IGIS

IGIS is an intelligent electronic system for recording temperature-compensated insulating gas pressure in gas-insulated medium voltage switchgear. It is used for automatic, permanent monitoring of the insulating gas pressure during operation and, if necessary, for issuing quick signals to the switchgear and the control room.

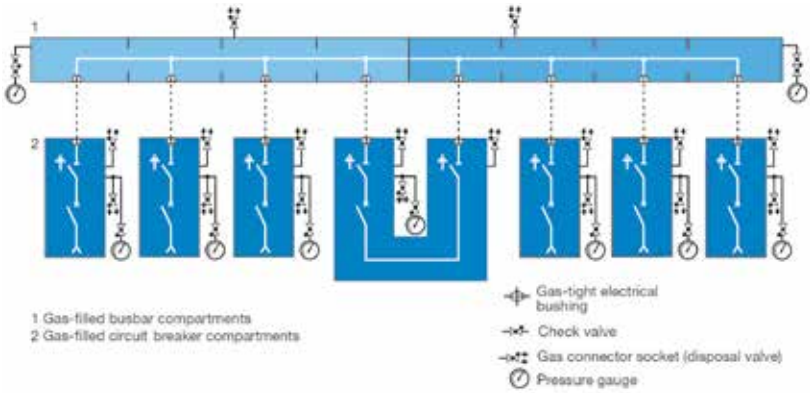

Gas compartment monitoring

For more info:
Catalogue: Products-L3-WS-70590-V2-EN

Catalogue: ADVC2-1166

Network Automation Page 96

Overhead Distribution Switchgear N-Series

Recloser

N-Series circuit breaker

ADVC Ultra Flex Controller

Overview

The N-Series Three-Phase Automatic Circuit Recloser combines state-of-the-art vacuum arc interruption, with integrated voltage and current measurement. These features are encased in a fully welded and sealed 316 grade stainless steel tank filled with insulating SF_6 gas.

Four models:

- N15 - 15.5kV, 12.5kA, 110kV BIL
- N27 - 27kV, 12.5kA, 150kV BIL
- N3812 - 38kV, 12.5kA, 170kV BIL
- N3816 - 38kV, 16kA, 170kV BIL.

› Up to 800A continuous current
› 10,000 operations
› Source-side voltage measurement as standard
› Load-side voltage measurement as standard
› ADVC **COMPACT** or **ULTRA** Controller

Main characteristics

- 15kV, 27kV and 38kV options
- 316 grade stainless steel tank
- Fully insulated bushing arrangement
- Latest technology vacuum arc interruption
- 800A continuous current
- 850A emergency current (8 hours)
- Exceptional reliability and service

Applications

- Feeder automatic circuit recloser
- Substation automatic circuit recloser
- Loop automation
- Automatic change-over
- Smart grid

N-Series pole mounted installation

N-Series substation installation

For more info:
Catalogue:
ADVC2-1166

Overhead Distribution Switchgear U-Series

Recloser

U-Series circuit breaker

ADVC Ultra Flex Controller

Overview

U-Series Three-Phase pole-mounted Automatic Circuit Recloser uses the latest technology in solid dielectrics, vacuum interruption and insulants. A 316 grade stainless steel enclosure protects the mechanism against the environment. The U-Series is rated up to 27kV, rated load current 630A and rated interrupting current 12.5kA.

Two models:

- U15 - 15.5kV, 12.5kA, 110kV BIL
- U27 - 27kV, 12.5kA, 125kV BIL.

› Up to 630A continuous current
› 10,000 operations
› Source-side voltage measurement as standard
› Load-side voltage measurement optional
› ADVC **COMPACT** or **ULTRA** Controller

Main characteristics

- 15kV and 27kV options
- 316 grade stainless steel tank
- Latest technology in solid dielectric and vacuum arc interruption
- I-terminal current and voltage measurement
- Optional X-terminal voltage measurement
- 630A continuous rated current
- Mechanical lockout

Applications

- Feeder automatic circuit recloser
- Substation automatic circuit recloser
- Loop automation
- Automatic change-over
- Smart grid.

7

U-Series pole mounted installation

U-Series substation installation

For more info:
Catalogue:
ADVC2-1166

Overhead Distribution Switchgear W-Series

Recloser

W-Series circuit breaker

ADVC COMPACT Controller

Overview

W-Series Single-Phase SWER Recloser provides automation and remote control on one phase. The W-Series is rated up to 24kV, rated load current 400A and rated interrupting current 6kA.

- Up to 400A continuous current
- 10,000 operations
- Source-side voltage measurement as standard
- Load-side voltage measurement optional
- ADVC **COMPACT** or **ULTRA** controller

Main characteristics

- 24kV phase to ground
- 316 grade stainless steel tank
- Single Phase applications
- SWER (single wire Earth return) applications
- 400A continuous rated current

Applications

- SWER recloser
- Smart grid

W-Series pole mounted installation

For more info:
Catalogue:
ADVC2-1166

Overhead Distribution Switchgear RL-Series

Load break switch/sectionaliser

RL-Series load-break switch

ADVC COMPACT controller

Overview

RL-Series Load Break Switches/Sectionalisers are contained in a hard wearing, SF_6 gas-filled, 316 grade stainless steel tank and offers the latest in arc quenching technology.

Extremely short arcing times (within half a cycle) plus tulip-type contacts with arc-resistant material, ensure a long switching life and extended short-circuit making capability.

- MR model - manually operated load-break switch
- FA model - fully automated sectionaliser
- Source-side voltage measurement as standard
- Load-side voltage measurement as standard
- ADVC **COMPACT** or **ULTRA** controller

Main characteristics

- 15kV, 27kV and 38kV models
- 630A continuous rated current
- 12.5 or 16kA short time withstand current
- 10,000 operations
- 316 grade stainless steel tank
- Bare terminal (15kV only) or fully insulated bushing arrangement
- Latest technology in SF_6 arc interruption
- Choice of manual or automated operation

Applications

- Manual load-break switch
- Motorised load-break switch
- Fully automated sectionaliser
- Normally-open tie point

Mid-Pole Operator

Designed to make mechanical operation (via hook-stick) easier, the Mid-Pole Operator brings the mechanically operated point of the switch down the pole. The operation point is lower and mounts up to six metres underneath the switchgear.

RL-Series pole mounted installation

Overhead Distribution Switchgear
ADVC Controller Range

Pole-mounted controller

ADVC Ultra Flex Controller

ADVC COMPACT Controller

SetVUE

FlexVUE

Overview

The ADVC Controller Range offers advanced protection, measurement, diagnostic and communication features in a reliable package. Designed around the user, the new controller range offers flexibility and choice. Users have a choice of two cubicle sizes (**ULTRA** and **COMPACT**) and two operator interfaces (**flexVUE** and **setVUE**).

All the protection, monitoring, communication, diagnostic and automation features are included as standard in all models.

- **ULTRA** - large 316SS controller cubicle with two accessory mounting areas
- **COMPACT -** smaller 304SS controller cubicle with one accessory mounting area
- **flexVUE** - interface with 20 configurable status lamps and 12 quick action keys
- **setVUE** - large 4 x 40 LCD with familiar menu-driven operation

Power supply options

- 110/240V a.c.
- Integrated VT
- DC

Accessories

- 8 x input, 8 x output interface
- Fast trip/close input interface

Main characteristics

- Choice of two operator interfaces, **flexVUE** or **setVUE**
- Choice of two cubicles, **COMPACT** or **ULTRA**
- IP65 rated protection for electronics
- RS232, RS485, V23 and 10Base-T Ethernet communication ports
- Temperature range down to -40°C
- DNP3, IEC 60870-5-101/104 and other protocols
- Stainless steel enclosure.

Applications

Automatic reclosing protection relay for Medium Voltage feeder applications. ADVC Controller Range interfaces to the following switchgear:

- N-Series
- U-Series
- W-Series
- RL-Series.

Custom Menu

With the Custom Menu features it is possible to nominate frequently used data field to appear in a dedicated scrolling menu. This new feature provides field operators with easy access to essential data, such as demand and system information when they open the controller door. It is also possible to access the entire engineering menu if required.

Custom Logic Tool (CLT)

Custom Logic Tool is used to customise system status indication via LEDs, enhance reporting via protocol and even allow the user to create their own control and automation functions in medium voltage overhead networks.

Distance to fault calculation

Based on line impedance, pre-fault and steady-state fault values the controller and calculates the distance from the recloser installation to the fault on the network. This information (in kilometres or miles) is used by the utility to despatch line crews more efficiently during network fault conditions.

Sync Check

Bringing co-generation online in medium voltage networks is now much easier with the Sync Check function available on the ADVC Controller. By utilising the integrated voltage sensors the Sync Check feature monitors the frequency, voltage phase, and amplitude on the source and load sides of the tie switchgear. Close operation is blocked when the generator is out of sync with the network and only allowed once the generator is in sync. The feature significantly improves network stability.

Overhead Distribution Switchgear

11Kv – 245Kv Air Break Switches

Overview

Schneider Electric has been designing and manufacturing disconnectors and outdoor switchgear for over 90 years with a voltage range from 11KV to 245KV and rated currents up to 4000A. We have an extensive range of rocking post designs as well as centre rotating double break, single side break, vertical break and vertical close.

Main characteristics

- Voltages, 11KV, 22KV, 33KV, 66KV, 110KV, and 245KV
- Continuous Current Ratings, 400A, 630A, 800A, 1200A and 4000A
- Switchgear designed and type tested to IEC standards
- Other types of Air Break Switches available on request.
- Datasheets available for all products.

Applications

- Transmission
- Distribution
- Substation

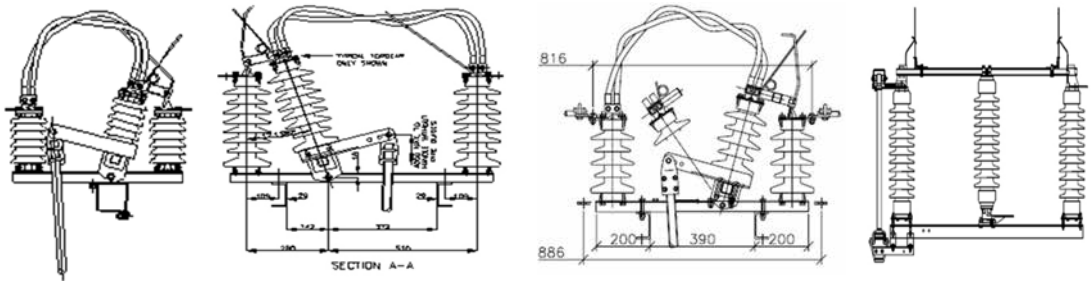

7

Common 22Kv Air Break Switch Products

Main characteristics

- Part code: ABS0500
- 22kV, 400A, Air Break switch Spar mounted
- Supplied factory assembled with flicker arc horns, silver plated contacts, stainless steel fasteners in the current path, 20NB/25NB pipe guide and operating handle
- Fully adjustable phase centre's

- Part code ABS0011
- 22kV, 800A, Air Break switch Spar mounted
- Supplied factory assembled with flicker arc horns, silver plated contacts, stainless steel fasteners in the current path, 20NB/25NB pipe guide and operating handle
- Fully adjustable phase centre's

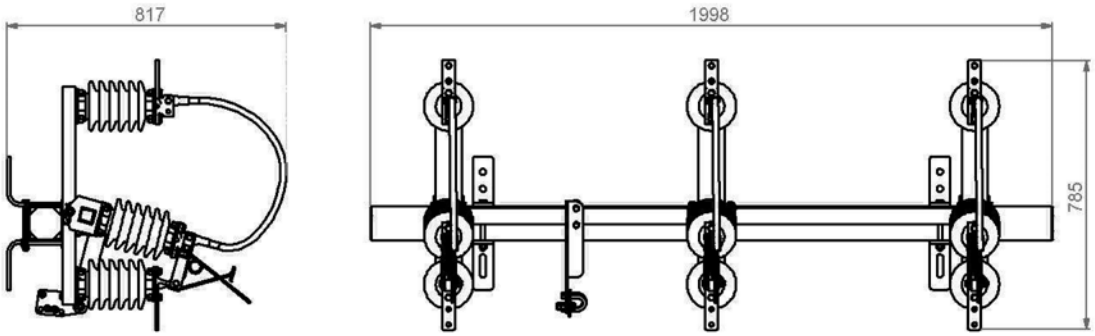

- Part code ABS0020
- 22kV, 400A, Air Break switch Bearer mounted
- Supplied factory assembled with flicker arc horns, silver plated contacts, stainless steel fasteners in the current path, 20NB/25NB pipe guide and operating handle
- Fully adjustable phase centre's

- Part code ABS0021
- 22kV, 800A, Air Break switch Bearer mounted
- Supplied factory assembled with flicker arc horns, silver plated contacts, stainless steel fasteners in the current path, 20NB/25NB pipe guide and operating handle
- Fully adjustable phase centre's

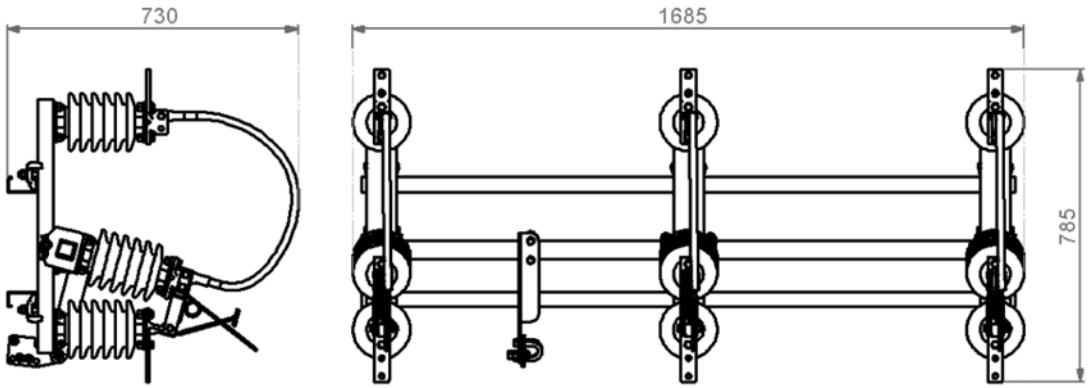

Common 11Kv – 33Kv Air Break Switch Products

Main characteristics

- Part code: ABS0480
- 11kV, 400A, vertical mounted Air break switch with brackets for DDO dropouts
- Bearer with J bolts mount
- Supplied factory assembled with flicker arc horns, silver plated contacts, stainless steel fasteners in the current path, pipe guide and operating handle
- Drawing references: 3790

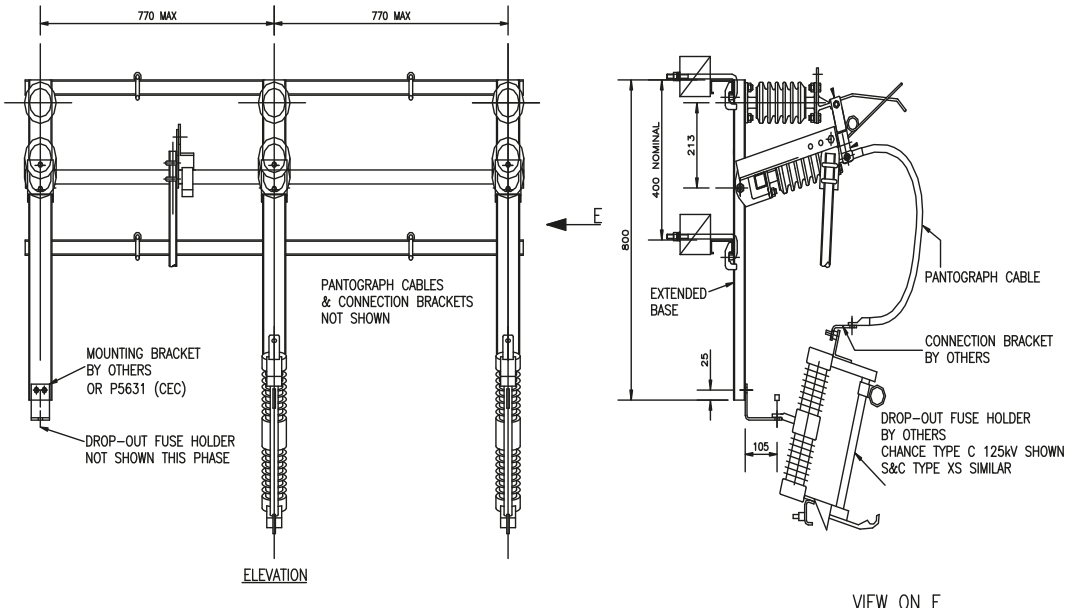

Main characteristics

- Part code: ABS0460
- 11kV, 400A, Air break switch spar-mounted
- Supplied factory assembled with flicker arc horns, silver plated contacts, stainless steel fasteners in the current path, pipe guide and operating handle
- Drawing references: 4455-2

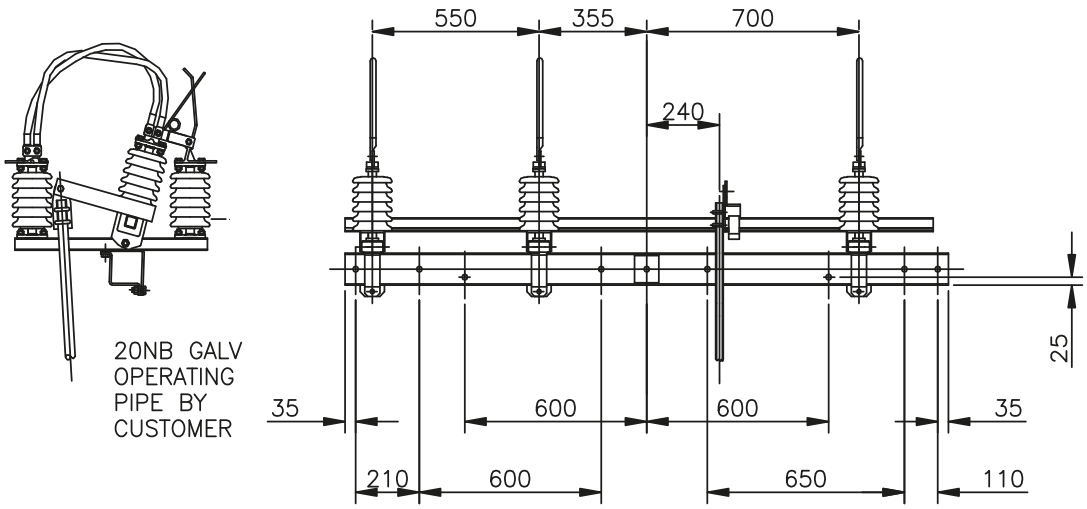

Common 11Kv – 33Kv Air Break Switch Products

Main characteristics

- Part code: ABS0500
- 11kV, 400A, air break switch
- Bearer with J bolts mount
- Supplied factory assembled with flicker arc horns, silver plated contacts, stainless steel fasteners in the current path, pipe guide and operating handle
- Drawing references: 3542

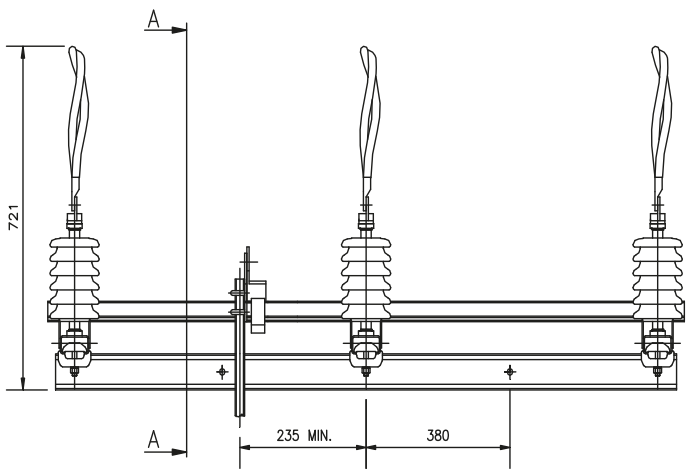

ELEVATION ON THREE PHASES

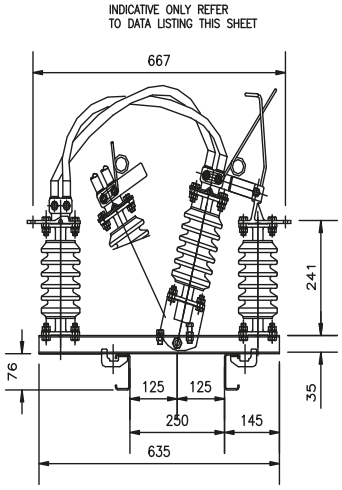

SECTION A–A

Main characteristics

- Part code: ABS0150
- 22kV, 400A, Air break switch spar-mounted
- Supplied factory assembled with flicker arc horns, silver plated contacts, stainless steel fasteners in the current path, pipe guide and operating handle
- Drawing references: 4455-24

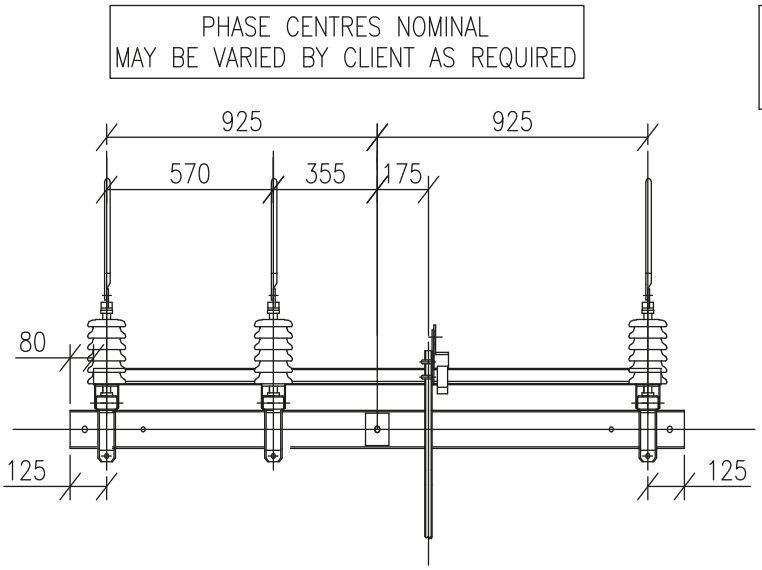

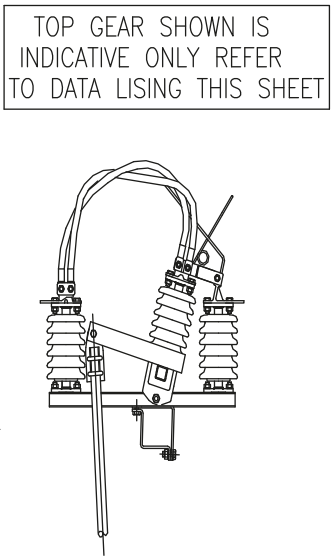

Common 11Kv – 33Kv Air Break Switch Products

Main characteristics

- Part code: ABS0310
- 33kV, 800A, Air break switch
- Spar mount
- Supplied factory assembled with flicker arc horns, silver plated contacts, stainless steel fasteners in the current path, pipe guide and operating handle
- Drawing references: 4488-3

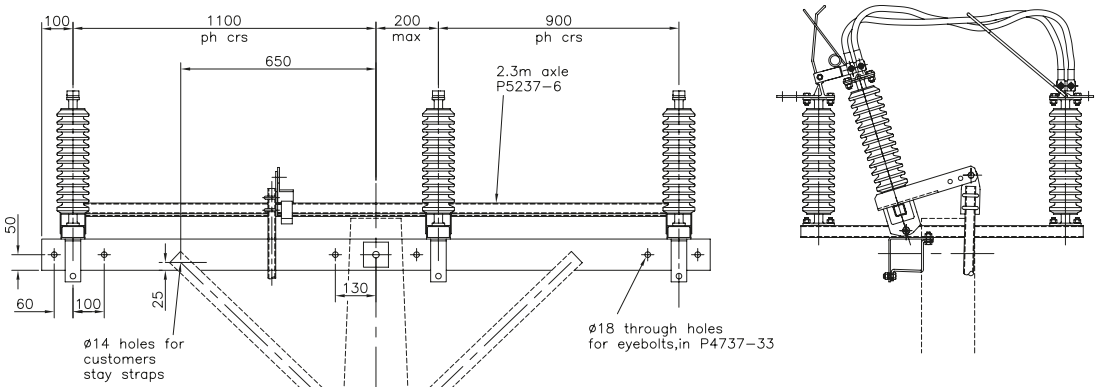

Main characteristics

- Part code: ABS0450
- 33 kV, 800A, air break switch
- Bearer with J bolts mount
- Supplied factory assembled with flicker arc horns, silver plated contacts, stainless steel fasteners in the current path, pipe guide and operating handle
- Drawing references: 3515

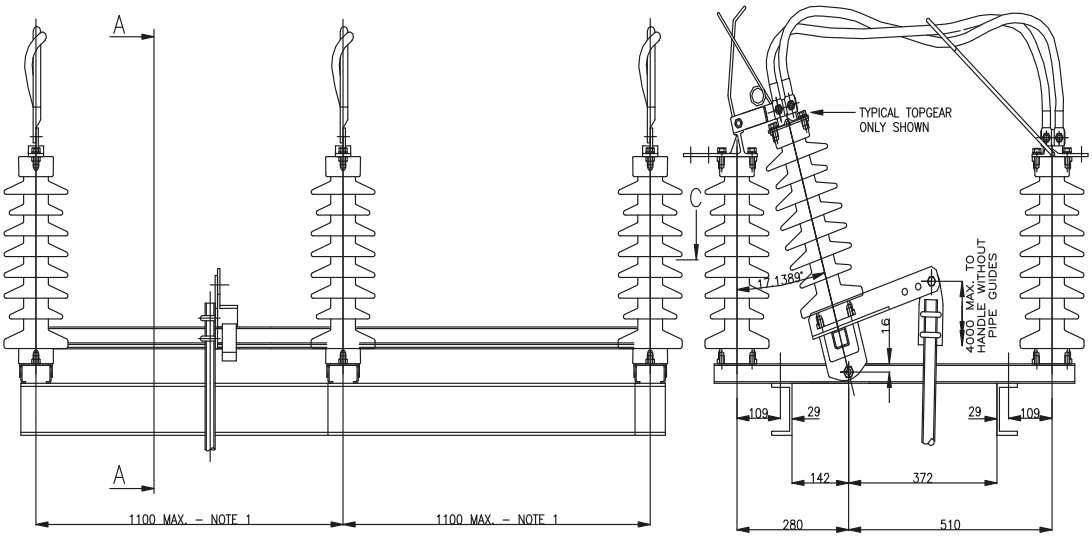

Common 66Kv - 110Kv Air Break Switch Products

Main characteristics

- Part code: IDW-AF
- 66kV, 630A, upright centre rotating disconnector
- Bearer with J bolts mount
- Optional EVR-CE earth switch
- Supplied factory assembled with flicker arc horns, silver plated contacts, stainless steel fasteners in the current path, pipe guide and operating handle
- Drawing references: MA3408:1

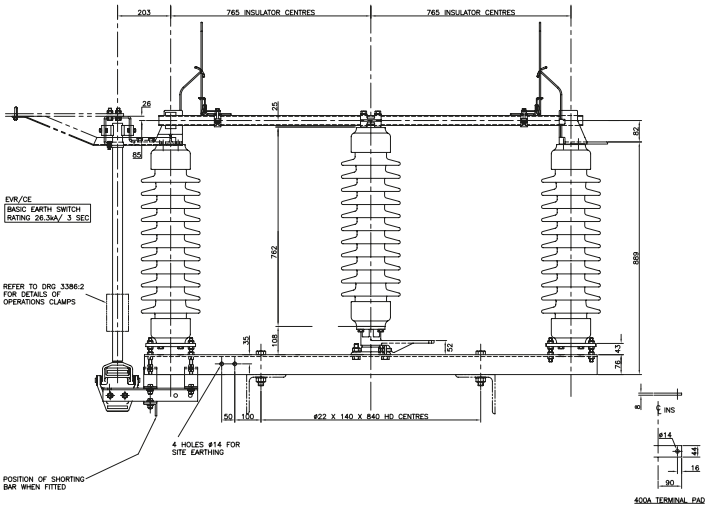

Main characteristics

- Part code: IDW-AG
- 110 kV, 630A,1000A, upright centre rotating disconnector
- Bearer with J bolts mount
- Optional EVR-CE earth switch
- Supplied factory assembled with flicker arc horns, silver plated contacts, stainless steel fasteners in the current path, pipe guide and operating handle
- Drawing references: MA3905:4

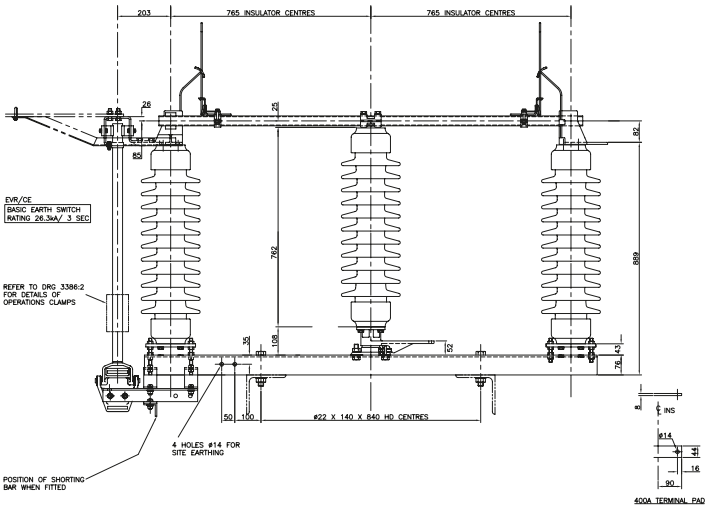

HM-LA Motor Operators for 11Kv – 66Kv Air Break Switches

Overview

Schneider Electric designs and manufacturers motorised operators for our 11Kv to 66Kv Air Break Switches. This enables the Air Break Switches to be locally or remotely electrically operated. The HM-LA motor operator uses an electrical actuator to drive the standard Air Break Switch pipe guide and operate the switch.

Main characteristics

- Air Break Switch Voltages, 11KV, 22KV, 33KV, 66KV
- Power Supply Voltage, 24Vdc, 48Vdc
- Stainless Steel Cabinet, Aux Contacts
- 2224 Newton Force for 11Kv Air Break Switches
- 4448 Newton Force for 33Kv & 66Kv Air Break Switches

Applications

- Manual Operation Via handle
- Local Electrical Operation Via Push button
- Remote Operation Via SCADA

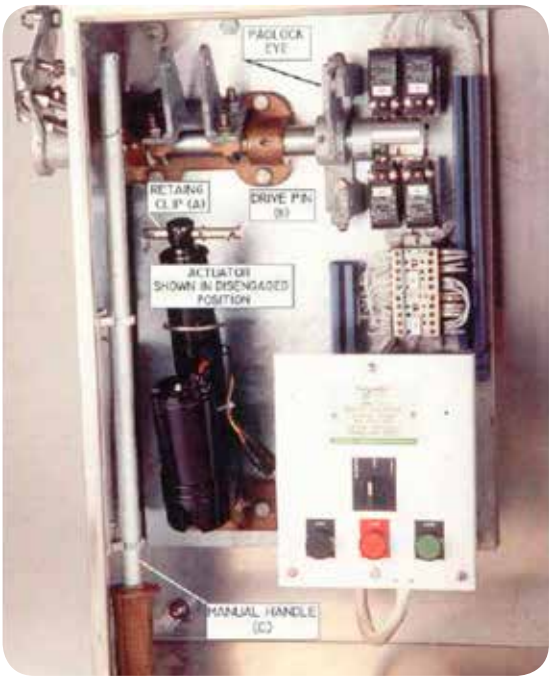

Copper/Aluminium Clamps and Connectors 11Kv – 110Kv

Overview

Schneider Electric has been designing and manufacturing substation and outdoor switchgear for over 90 years. Schneider Electric is able to design and manufacturer a range of substation structures and supports for a variety of substation voltages, equipment types and switchyard arrangements. We are able to design to New Zealand seismic and structural strength standards with type design studies and approvals by our consultant engineers.

Main characteristics

- Voltages, 11KV, 22KV, 33KV, 66KV, 110KV
- Current Rating, 400A, 630A, 800A and 2000A
- Copper or Aluminium

Applications

- Terminal Connectors, Earthing Connectors, Expansion connectors, Tee Connectors
- Corona Bells/Rings
- Inline Jointing connectors

Bolted Type CA Connectors

Adaptor	
Series CA-A Adaptors	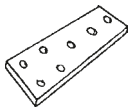
Terminals	
Series CA-B Fixed terminal	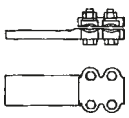
Series CA-BT Tee terminal	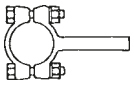
Series CA-C Expansion terminals	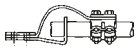
Series CA-CL Right angle expansion terminals	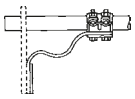
Series CA-F Flexible jumpers	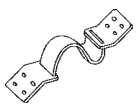
Series CA-G Corona bells	

In-Line jointing connectors	
Series CA-I	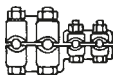
Series CA-J with fixed support	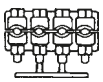
Series CA-K with sliding support	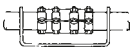
Series CA-I with expansion joint on busbar	
Supports only	
Series CA-M fixed **CA-N** sliding	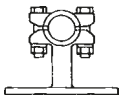
Spacers	
Series CA-RD with support	
Series CA-SD	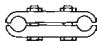
Tee connectors	
Series CA-T	

Welded Type CA-W Connectors

Adaptor	
Series CA-AW adaptors	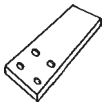
Fixed Terminals	
Series CA-BW	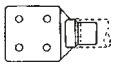
Series CA-BLW right angle	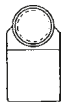
Series CA-BSW sloping angle	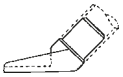
Series CA-BTW tee terminal	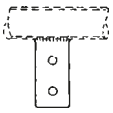
Expansion Terminals	
Series CA-CW	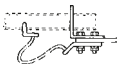
Series CA-CLW right angle expansion terminal	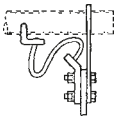
Series CA-CTW tee expansion terminal	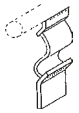
Series CA-EW Earthing points	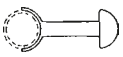

In-line jointing connectors	
Series CA-IW Tubular splice	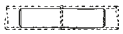
Series CA-ILW Elbow	
Series CA-ISW sloping elbow	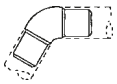
Series CA-JW Supported splice	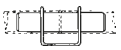
Series CA-KW sliding support	
Series CA-LW expansion joint on busbar	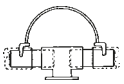
Series CA-MW fixed **CA-NW** sliding	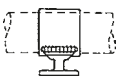
Series CA-MSW suspension	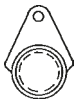

Tee Connectors	
Series CA-TW	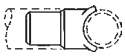
Series CA-TAW	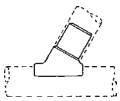
Series CA-VW tee with sliding support	
Series CA-W supported tee	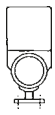

Outdoor Substation Switchyards 11Kv – 110Kv

Overview

Schneider Electric has been designing and manufacturing substation and outdoor switchgear for over 90 years. Schneider Electric is able to design and manufacturer a range of substation structures and supports for a variety of substation voltages, equipment types and switchyard arrangements. We are able to design to New Zealand seismic and structural strength standards with type design studies and approvals by our consultant engineers.

Main characteristics

- Substation Voltages, 11KV, 22KV, 33KV, 66KV, 110KV
- Cable Stands, Circuit Breaker Stands, Bus Supports
- CT/VT Stands, Disconnector Stands
- Tubular Copper or Aluminium busbar, Clamps and accessories
- Substation Class Disconnectors/Air Break Switches and earthing Switches
- Stainless Steel terminal boxes, Metering Boxes
- Outdoor 33Kv Circuit breakers
- NER and Neutral Earthing Transformers

Specifications needed

- System Voltage, 11KV, 22KV etc, Substation Load
- Draft Substation Layout, cable sizes
- CT/VT, Circuit Breaker physical size, weight and footprint
- Location

Neutral Earthing Resistors

Overview

The Schneider Electric range of neutral earthing resistors is designed for voltages from 11Kv to 120Kv and rated currents up to 1000A. The Schneider Electric range of neutral earthing resistors use Stainless Steel edge wound Resistor Grids and has a galvanised steel frame with stainless steel panels and roof.

Neutral earthing resistors are designed to limit the current flow to earth under fault conditions. This NER limited fault current is low enough to prevent damage to the generating, distribution and other associated equipment, yet high enough to operate fault clearing relays.

Engineering Data Required for Quotation

Item:	Description:	Characteristics:	Unit:		
1	System Voltage:	Up to 120Kv	**kV**		
2	Phase to Earth Voltage		**kV**		
3	Short Time Current:		A		
4	Duration of STC:		s		
5	Continuous Current:		A		
6	Resistance		ohms		
				Options:	
7	Enclosure cladding – side panels, roof, and cable box if required:	The Frame is fabricated from welded mild steel, and hot dip galvanised.		Stainless steel, or	Aluminium.
8	HV Terminal Bushing:	For the cable box option, a standard external type bushing is used between the main enclosure and the cable box.		Exterior, top mounted, or	In cable box, side mounted.
9	Neutral Current Transformers:	If NCT(s) required, please supply the following details:			
	Core 1 :	Ratio:	A		
	Class:				
	Core 2: (if required)	Ratio:	A		
	Class:				

Applications

- Transmission
- Distribution
- Mining

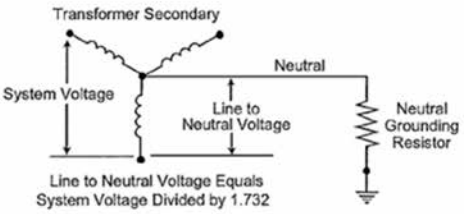

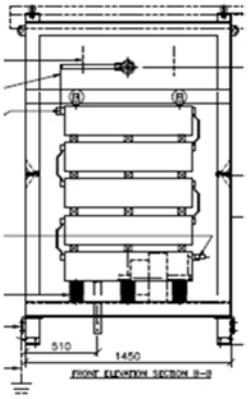

Motor Starters
Motorpact

MV motor starter

Motorpact

Motorpact with MCset 1-2-3

Overview

Motorpact is an indoor, metal-enclosed switchgear intended for asynchronous MV motor applications with a service voltage up to 7.2kV / 3.8MW.

Motorpact includes a wide range of motor starters for different motor application needs.

- FVNR - full voltage non-reversing
- FVR - full voltage reversing
- 2S2W - 2-speed 2-winding full voltage non-reversing
- 2S1W - 2-speed 1-winding full voltage non-reversing
- RVSS - reduced voltage soft start
- S3 - sequential smart start reduced voltage non-reversing
- RVAT - reduced voltage auto-transformer

Electrical characteristics

Rated voltage	Ur	kV		3.3	5.5	6.6
Insulation level						
Power frequency withstand	Ud	50Hz, 1 min (kV rms)		20		
Lighting impulse withstand	Up	1.2/50 µs (kV peak)		60		
Rated current						
Rated busbar current	In	A		2500 - 3150		
Short-time withstand current	Ith	kA/3s	40	200 - 400		
		kA/2s	50	200 - 400		
Rated operational current 200A						
Motor power with 315A single fuse		kW		950	1500	1800
Transformer power with 315A single fuse		kVA		1000	1600	2000
Rated operational current 400A						
Motor power with 315A single fuse		kW		950	1600	1900
Motor power with 315A double fuses		kW		1900	3000	3800
Transformer power with 315A double fuses		kVA		1800	3000	3500
Rated capacitor switching current						
Maximum capacitor		kVar		2000	2000	2000

Main characteristics

Internal arc withstand

- 3 side protection: 25kA/1s, A-FL
- 4 side protection: 25kA/1s, A-FLR
  in accordance with AS 62271-200

Protection index

- Air insulated switchgear (AIS)
- Class: PI (insulating partition)
- Loss of service continuity classes: LSC2A
- Units in switchboard: IP3X (IP4X)
- Between compartments: IP2X

Applications

- Oli and gas, mining, water treatment, pulp and paper
- Starting pumps, fans, compressors, chillers, conveyors
- Thermal monitoring
- Network protection – Sepam
- Direct on-line motor starting
- Motor start with reduced voltage

RVSS application

Stand-alone soft starters are a good solution for installations where motors are far away from the main switchboard. Installing the soft starters close to the motors maintains maximum performance.

Applications where multiple motors are started or stopped one by one, can be controlled by one soft starter using the S3 option. This is a cost-effective solution for pumping stations or fans.

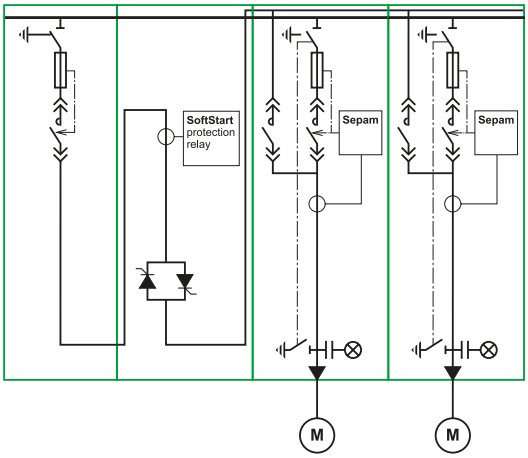

Motor Starters
PIX MCC

MV motor starter

PIX MCC

GemStart 5

Overview

PIX MCC is a direct on-line (full voltage) motor starter that is part of the PIX family. It uses a 'slimline', single tier fused vacuum contactor for motor applications with a service voltage up to 7.2kV/2.7MW

Versions:

Version 1: electrically held with auxiliary power
Version 2: electrically held with internal VT
Version 3: with mechanical latch

Electrical characteristics

Rated voltage	Ur	kV	3.6	7.2
Insulation level				
Power frequency withstand	Ud	50Hz, 1min (kV rms)	10	20(32)
Lighting impulse withstand	Up	1.2/50 µs (kV peak)	40	60
Rated current				
Rated busbar current (with cooling fan)			3150 (4000)	3150 (4000)
Rated short time withstand current 3s		kA rms	up to 40/50	up to 40/50
Rated peak withstand current		kAp	100/125	100/125
Fused contactor unit				
Rated thermal current		A	depending on fuse type	
Nominal operating voltage		kV	3.3	6.6
Maximum motor rating		kW	1400	2700
Maximum transformer rating		kVA	1600	3100
Maximum capacitor bank rating		kVAR	1300	1700
Contactor				
Rated current (AC4 duty)		A	400	400
Earth switch				
Short time withstand current 1s/3s		kA rms	6	6
Peak making current		kAp	15	15

8

Main characteristics

Internal arc withstand

4 side protection: 40kA/1sec A-FLR

Protection index

- Air insulated switchgear (AIS)
- Class: PM (metallic partition)
- Loss of service continuity class: LSC2B
- Degree of protection, external: IP3X (IP4X optional)
- Degree of protection between compartments: IP3X
- Degree of protection with open door: IP2X

Applications

- Oil and gas, mining, power plants
- Motor starting
- Intelligent control and protection: GemStart 5

Compact design

The PIX Motor Control Center is a slimline design, which lines up directly with the PIX range, without interface cubicles. The design philosophy and operation are similar to the PIX switchgear range, helping reduce training time and minimise the risk of improper use.

MV devices

1. Busbars for cubicle interconnection
2. Withdrawable fused contactor
3. MV connections by cables accessible from the front face
4. Earthing switch
5. Current transformers

LV control cabinet

6. Low voltage auxiliaries and the protection, monitoring and control unit are in a control cabinet, which is separated from the medium voltage part.

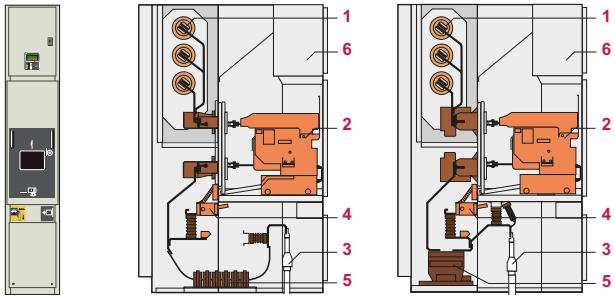

PIX MCC

Schneider Electric

Customer Service Tel: 0800 652 999

For more info:
Brochure:
DIA2ED1121250EN

Medium Voltage Drive Systems Altivar 1200

MV variable speed drive

ATV1200

Overview

ATV1200 is an indoor variable speed drives (VSD) intended for asynchronous and synchronous MV motor applications, with service voltage up to 11kV. Significant energy saving on your application can be obtained, enabling a quick return on investment.

Electrical characteristics

Power rating	315-16200kVA
Input	**24-54 pulse diode rectifier brige**
Input voltage	**3/6/11kV, as required**
Input frequency	50/60Hz
Output voltage	3,6,11kV as required

Main characteristics

- Catch on fly (low and high inertia)
- Simulation mode for commissioning
- Master slave function up to 3 motors
- Speed synchronised control (load sharing)
- Motor auto-tuning
- Soft start function
- Multi-motor control (cascade mode)
- Auto-restart
- Communication: Modbus, Modbus TCP, Ethernet IP, Profibus or DeviceNet
- Protection class: standard IP31. Option: IP41, IP42

Applications

ATV1200 dedicated to industry and utilities applications such as fan, pump, compressor and conveyor.

8

Benefits

- Reduction of energy consumption
- Reliable, high performance motor control solution
- Easy integration into existing or new installation
- Reduced maintenance costs
- Comprehensive service and support available

Medium Voltage Drive System ATV1200

For more info:
Catalogue:
AMTED307010EN
(Evolis 17.5)
AMTED307011EN
(Evolis 24)

Loose Components
Evolis 17.5 and 24

Vacuum circuit breaker

Evolis 17.5 kV fixed, frontal version

Evolis 24 kV fixed, lateral version MV connection on the left hand side

Evolis 17.5 kV withdrawable, frontal version in NEX cradle

Overview

Evolis is a vacuum circuit breaker intended for use in medium voltage network applications, new installations or renovation, and provides protection for all types of applications up to 24kV and 2500A.

Evolis circuit breakers are available for different installations including:

- Evolis 17.5 fixed frontal version
- Evolis 24 fixed frontal or lateral versions
- Evolis 17.5 withdrawable frontal version
- Evolis 24 withdrawable frontal version
- Evolis 17.5 HP (high-power) withdrawable frontal version.

Electrical characteristics

Rated voltage	Ur	kV		7.2	12	17.5	24
Insulation level							
Power frequency withstand	Ud	50Hz, 1 min (kV rms)		20	28	38	50
Lighting impulse withstand	Up	1.2/50 µs (kV peak)		60	75	95	125
Rated current							
Rated current	Ir	A	630	■	■	■	■
		A	1250	■	■	■	■
		A	2500	■	■	■	■
		A	3150	■	■	■	–
Short-time withstand current	Ith	kA/3s	16	–	–	–	■
			25	■	■	■	■
			31.5	■	■	■	■
			40	■	■	■	–
			50	■	■	■	–

Main characteristics

- Mechanical endurance: M2 (10000 operations)
- Electrical endurance: E2
- Capacitive current breaking: C1
- In accordance with IEC 62271-100

Applications

Protection of:

- public distribution, mining, infrastructure, industry and commercial
- it provides protection for all types of applications such as cables, overhead lines, motors, capacitors, transformers and source busbar sections
- auxiliaries, including shunt trip, undervoltage coil, motor mechanism, auxiliary switch, operations counter, etc.

Breaking principle

Evolis circuit breakers use the axial magnetic field (AMF) technique. It involves applying an axial magnetic field parallel to the axis of the two contacts, which allows a diffuse arc to be maintained even at high current values. The arc energy is spread over the whole contact surface area, therefore causing very low levels of erosion.

Loose Components
LF and LFP

SF_6 circuit breaker

LF1-LF2-LF3 circuit breaker fix

LF circuit breaker withdrawable

LFP circuit breaker with support

Overview

LF and LFP are sulphur hexafluoride (SF_6) circuit breakers and intended for use in medium voltage network applications, new installations or renovation and provides protection for all types of applications up to 17.5kV and 5000A.

LF and LFP circuit breakers are available for different installations including:

- LF fixed. Up to 3150A and 50kA breaking current
- LFP fixed. Up to 5000A and 50kA breaking current
- LF withdrawable. Up to 3150A and 50kA breaking current.

Electrical characteristics

Rated voltage	Ur	kV		7.2	12	17.5
Insulation level						
Power frequency withstand	Ud	50Hz, 1 min (kV rms)		20	28	38
Lighting impulse withstand	Up	1.2/50 µs (kV peak)		60	75	95
Rated current						
Rated current	In	A	630	■/■/-/-	■/■/-/-	-/■/-/-
		A	1250	■/■/-/-	■/■/■/-	-/■/■/-
		A	2000	-/■/■/-	-/■/■/-	-/■/■/-
		A	2500	-/-/■/-	-/-/■/-	-/-/■/-
		A	3150	-/-/■/-	-/-/■/-	-/-/■/-
Breaker LF1/LF2/LF3/LFP		A	5000		-/-/-/■	-/-/-/■
Short-time withstand current	Ith	kA/3s	25	■/-/■/-	■/-/■/-	-/■/■/■
			31.5	■/-/■/-	■/-/■/-	-/■/■/■
			40	-/■/■/-	-/■/■/■	-/-/■/-
Breaker LF1/LF2/LF3/LFP			50	-/■/■/-	-/-/■/■	

Main characteristics

- Mechanical endurance: M2 (10000 operations)
- Electrical endurance: E2
- Capacitive current breaking: C2
- In accordance with IEC 62271-100

Applications

- Public distribution, mining, infrastructures, industry and commercial.
- Through their anti-seismic qualification, they are particularly well suited to nuclear or thermal power production installations and applications in heavy industries, such as mining and petrochemical industry.
- Through their compact dimensions and harmonised range, LF circuit breakers are positioned very favourably on the retrofit market.
- With self expansion, the breaking technique used in these circuit breakers (all current types; capacitive and inductive) can be made or broken without generating overvoltage, which could damage your installation. The LF circuit breaker is ideally suited to operating capacitor banks.

Breaking principle

LF circuit breakers use the SF_6 gas self expansion technique. It combines the effect of thermal expansion, with a rotating arc to create arc blowing and quenching conditions. The result is reduced control energy requirements and arcing contact erosion, which increases mechanical and electrical endurance.

Loose Components
SF

SF_6 circuit breaker

SF1 circuit breakers with a B1 side operating mechanism

SF2 circuit breakers fixed version

SF F400 circuit breakers withdrawable version

Overview

SF is a sulphur hexafluoride (SF_6) circuit breaker intended for use in medium voltage network applications, new installations or renovation and provides protection for all types of applications up to 40.5kV and 2500A

SF circuit breakers are available for different installations including:

- SF1 fixed. Up to 36kV, 1250A and 25kA breaking current
- SFset fixed. Up to 24kV, 1250A and 25kA breaking current
- SF2 fixed. Up to 40.5kV, 3150A and 40kA breaking current
- SF F400 withdrawable. Up to 40.5kV, 3150A and 40kA breaking current.

Electrical characteristics

Rated voltage	Ur	kV		12	17.5	24	36	40.5
Insulation level								
Power frequency withstand	Ud	50Hz, 1 min (kV rms)		28	38	50	70	95
Lighting impulse withstand	Up	1.2/50 µs (kV peak)		75	95	125	170	185
Rated current								
Rated current	In	A	400		■/■/-	■/■/-		
		A	630	■/■/-	■/■/■	■/■/-		
		A	1250		■/■/■	■/■/-	-/-/■	-/-/■
		A	2500				-/-/■	
Breaker SF1/SFset/SF2		A	3150			-/-/■		
Short-time withstand current	Ith	kA/3s	12.5		■/■/-	■/■/-	■/-/-	
			16			■/■/-	■/-/-	
			20		■/■/-	■/■/-	■/-/-	
			25	■/■/-	■/■/-	■/■/-	■/-/■	
			31.5				-/-/■	-/-/■
Breaker SF1/SFset/SF2			40			-/-/■	-/-/■	

Main characteristics

- Mechanical endurance: M2 (10000 operations)
- Electrical endurance: E2
- Capacitive current breaking: C2
- In accordance with IEC 62271-100

Applications

- Public distribution, mining, infrastructure, industry and commercial.
- With self expansion, the breaking technique used in these circuit breakers (all current types; capacitive and inductive) can be made or broken without generating overvoltage which could damage your installation. The LF circuit breaker is ideally suited to operating capacitor banks.

Breaking principle

SF circuit breakers use the puffer principle with SF_6 gas. This method cools and extinguishes the electric arc as it passes through zero current by puffing a gas compressed by a piston attached to the moving contact. The gas is channeled by an insulating nozzle towards the tubular arcing contacts that are used as an exhaust.

For more info:
Catalogue:
AC0226E

Loose Components
Rollarc and CBX

SF_6 contactor and vacuum contactor

Rollarc contactor basic version without cradle

Rollarc contactor fixed version

Rollarc contactor withdrawable version

Overview

Rollarc is a sulphur hexafluoride (SF_6) contactor intended for use in frequently operated medium voltage network applications, new installations or renovation for all types of applications up to 12kV / 400A.

There are two types of Rollarc contactors:

- the R400, with magnetic holding
- the R400D, with mechanical latching.

The Rollarc R400 and R400D contactors are available in three versions:

- **basic** - contactor alone, without the cradle
- **fixed** - the contactor is mounted on a fixed cradle
- **withdrawable** - the contactor is mounted on a withdrawable cradle.

Electrical characteristics

Rated voltage	Ur	kV	7.2	12
Insulation level				
Power frequency withstand	Ud	50Hz, 1 min (kV rms)	20	28
Lighting impulse withstand	Up	1.2/50 µs (kV peak)	60	60
Rated current				
Rated current	In	A	400	
Breaking capacity		kA	10	8
Breaking capacity with fuse		kA	50	40
Making capacity		kA	25	20
Short-time withstand current	Ith	kA/3s	10	8

Main characteristics

- Mechanical endurance (magnetic holding): 300,000 op
- Mechanical endurance (mechanical latching): 100,000 op
- Electrical endurance: 50 operating cycles at 10,000A
- In accordance with IEC 62271-105

Applications

- Rollarc is particularly suited to polluted environments such as mines, cement works, etc.
- Protection and control of MV motors, capacitor banks and power transformers.

For more info:
Catalogue:
NTV120-E

9

Overview

The CBX is a vacuum contactor for 7.2kV and 12kV applications and is available as a single-phase (CBX3-C) or three-phase unit (CBXS3-C). A mechanical interlock between two contactors is available for motor reverser applications. A withdrawable type of CBX for motor starter cubicles equipped with fuse holders (DIN or BS type) is also available. The CBX contactor comes with an electronic auxiliary supply (EAS) as standard.

CBX Vacuum Contactor (3-phase)

CBX Vacuum Contactor Armature

Electrical characteristics

Rated voltage	Ur	kV	CBX3-C	CBXS3-C
Insulation level			7.2/12	
Power frequency withstand	Ud	50Hz, 1min (kV rms)	20/28	
Lighting impulse withstand	Up	1.2/50 µs (kV peak)	60/75	
Rated current				
Inductive Load				
Rated thermal current		A	400	400
AC3 duty		A	400	
AC4 duty		A	315	
Maximum motor rating*		kW	5300	
Inrush current		KAp	10	12.5
Capacitive Load				
Rated operational current		A	400	
Maximum capacitor bank rating		kVAr	3360/5600	
Rush current		KAp	20	
Short time withstand current				
1s		kA	4	4
30s		kA	19	19
Peak on 1/2 cycle		kAp	25	12.5
Average chopping current			2.3	2.3

* DIN fuses for motor application type FD3M available on request

Main characteristics

- Mechanical endurance: 3 000 000
- Electrical endurance at rated current: 500 000

Applications

- Process industries
- Mining
- Oil & Gas
- Power Generation

Loose Components
Indoor Instrument Transformers

CTs and VTs

ARJP1 CT

VDF12 VT

TLP190 LPCT

VRC2 VT

AR01b CT

Overview

The Schneider Electric range of instrument transformers is designed for voltages from 0.72kV to 36kV and rated currents from 5A to 4000A to meet all medium and low voltage electrical distribution requirements.

Schneider Electric instrument transformers include a wide range of indoor equipment for voltage or current measurement.

- CT - current transformer
- VT - voltage transformer
- LPCT - low power current transformer

Main characteristics

Accuracy class

Metering
- 0.2 - laboratory metering and rare billing applications
- 0.5 - statistical metering and typical billing applications

Protection
- 5P - differential or zero sequence protection (most common)
- 10P - impedance relay or amperometric protection

Applications

- Network protection – Sepam
- Metering - ION

LPCT

LPCT is a low power current transformer using an MV signal in the secondary circuit. It increases safety of the installation, as an open circuit secondary does not damage the unit and simplifies installation with prewired cable and connection to the protection relay. Thanks to a linear characteristic, one device can provide protection functions from a few amps up to the short circuit level

Protection or metering devices have to receive data on electrical values (current or voltage) from the equipment to be protected. For technical, economical and safety reasons, this data cannot to be obtained directly on the equipment's MV power supply; we have to use intermediary sensors - current and voltage transformers. These devices reduce the size of value to be measured, providing galvanic separation and supplying the power needed to process the data. CTs and VTs are an integral part of the protection circuit.

Example: 400/5 A, 15 VA, cl 0.5, FS 10

Primary current
Secondary current
Accuracy power
(see explanation in the example)
Accuracy class
Safety factor

Example: 400/5 A, 15 VA, 5P10

Primary current
Secondary current
Accuracy power
(see explanation in the example)
Accuracy class
Safety factor

Loose Components
Fuses

MV fuses

Fusarc CF fuses for CAS 36

Overview

Schneider Electric fuses provide protection to medium voltage distribution devices from 3 to 36kV from both the dynamic and thermal effects of short-circuit currents greater than the fuse's minimum breaking current.

The Schneider Electric range includes fuses for different medium voltage applications.

- Fusarc CF - DIN type up to 250A at 3 to 36kV
- Solefuse - UTE type up to 125A at 7.2 to 36kV
- MGK - motor applications up to 250A and 7.2kV
- Tepefuse - instrument transformer protection

Main characteristics

- Un - rated voltage
- In - rated current
- I3 - minimum rated breaking current
- I2 - critical currents
- I1 - maximum rated breaking current

Applications

- Considering their low cost and lack of required maintenance, medium voltage fuses are an excellent solution to protect various types of distribution devices.
- Medium voltage current consumers (transformers, motors, capacitors, etc).
- Public and industrial electrical distribution networks.

Fuse characteristics

In accordance with IEC 60282-1, it is recommended to replace all three fuses in a three-phase circuit when one of them has already blown, unless it is certain that there has been no overcurrent in the fuses that have not blown. It is important to take into account the fact that the striker only acts when the fuse element has blown. However, if the striker has not been activated, this does not mean that the fuse has not been subject to an overcurrent.

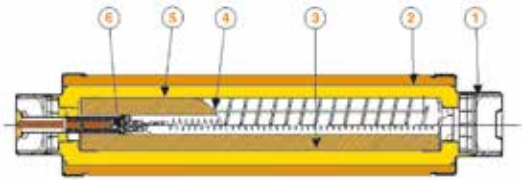

1 *Contact caps*
2 *Enclosure*
3 *Core*
4 *Fuse element*
5 *Extinction powder*
6 *Thermal striker*

Time/current characteristics curves
3.6 - 7.2 - 12 - 17.5 - 24 - 36 kV

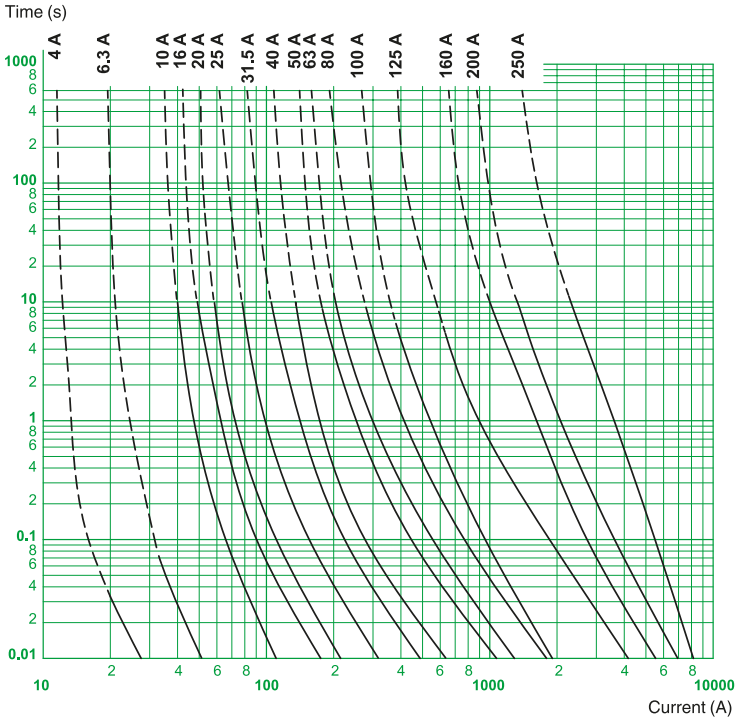

For more info:
Catalogue: CFIED205098EN_01
Solution Guide: CFIED205098EN_02
Power factor correction and harmonic filtering solutions - Page 79

Loose Components
Propivar

Capacitors and medium voltage banks

Propivar medium voltage capacitor banks

Single-phase Propivar capacitor

CP214 and CP227 fixed capacitor bank

CP253 and CP254 automatic capacitor bank

Overview

A Propivar medium voltage capacitor has a maximum premissable rated voltage of 2250V. When connected in series-parallel groups, they provide high-power banks for elevated system voltages upto 36kV.

Propivar capacitors

- With or without internal fuses
- Single-phase or three-phase
- Max. network voltages up to 36 kV
  - Up to 450 kvar (three-phase capacitors)
  - Up to 600 kvar (single-phase capacitors)

Main characteristics

Devices using power electronics (variable speed drives, rectifiers, UPS, arc furnaces, fluorescent lamps, etc.) circulate harmonic currents in electrical networks. Such harmonics can interfere with the operation of many devices. Capacitors are highly sensitive to harmonics.
A high level of harmonic pollution causes capacitors to overheat and age prematurely (breakdown). Different types of compensation must be chosen according to the power of the harmonic generators.

Standard type - for slightly polluted network
SAH type - for highly polluted network

Applications

Compensation of reactive power on a network or in an electrical installation has various economic and technical advantages:

- economic advantages in that it cuts down on electricity bills through elimination of excessive consumption of reactive power
- technical advantages in that it:
  - increases power available at the secondary of the transformers
  - reduces voltage drop in MV distribution networks
  - reduces temperature rise in cables for constant active power.

Construction

Propivar capacitors are composed of elements, which include:

- aluminium foil electrodes.
- a non-chlorinated biodegradable dielectric liquid and a polypropylene film.

A dielectric solely made up of plastic films helps to greatly reduce dielectric losses.
The Propivar capacitor complies with standard IEC 871, 1 and 2.

For more info:
User manual:
S1B1233100

Datasheet:
NRJED311042EN-PS100

Loose Components
Easergy PS100

Backup power supply

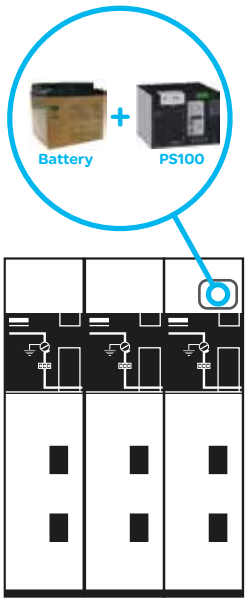

PS100

Overview

Easergy PS100 is a high-availability power supply, including a battery to ensure uninterrupted operation of the whole substation in the event of loss of the main supply.

Traditional backup power supplies require a set of 2 or 4 batteries to produce 24V or 48V, with complicated replacement and adjustment of the battery pack. The PS100 needs only one battery, simplifying replacement. The battery is a standard sealed lead-acid 12V battery with a 10-year service.

Main characteristics

- Includes a regulated and temperature-compensated charger
- Stops the battery before deep discharge
- Carries out a battery check every 12 hours
- Measures battery ageing
- Forwards monitoring information via a Modbus communication port and output relays

The PS100 consists of two parts:
- power supply
- one battery.

Power supply (PS100)	Battery
■ 24V or 48V output ■ DIN rail mounting ■ RJ45 Modbus communication port ■ Diagnostics with LEDs	12V, 24Ah or 38Ah sealed lead acid battery available

Applications

The PS100 unit supplies backup operating power for:

- MV switchgear electrical mechanism (motor and coils)
- transmission equipment (e.g. radio)
- protection relays, fault passage indicators or other IEDs
- all other devices in ML/LV substations (LV breakers, PLC concentrator).

Improved availability of MV/LV substations

The PS100 is designed to ride through power network interruptions of up to 48 hours. It is associated with a battery selected to meet the required backup time. For example, a 38Ah battery provides 12 hours of backup power supply to a SM6 switchboard including 4 Sepam units.

For more info:
Brochure:
TrioBrochure–A4-V009

Loose Components
Trio Radio

Digital data radio modems

Trio E-Series

Trio J-series and K-Series

Trio M-Series

Overview

Trio radios provide secure and reliable wireless communication for municipal water suppliers, oil and gas producers, electrical utilities and other industries. A powerful Network Management System is available for remote configuration and monitoring of the entire radio system from any network node and is an essential tool in troubleshooting and preventative maintenance tasks. Monitoring and control infrastructure can be situated in geographically-dispersed locations, comprised of a diverse mix of equipment and system architectures, and subject to stringent environmental and safety regulations.

Main characteristics

- Licensed band – 380 to 520 MHz (UHF) - standard and redundant base/repeater stations (E-Series, M-Series)
- Unlicensed band - 915 MHz/2.4GHz Frequency Hopping Spread Spectrum (FHSS) (J-Series, K-Series)
- Ethernet and serial connectivity
- Point-to-point (PTP) and point-to-multipoint networks (PTMP)
- Network wide diagnostic interrogation which can be performed from anywhere in the system including any remote radio
- Remote over-the-air configuration of any radio from any location
- Over the air firmware upgrades
- FCC, ETSI, ACMA and CSA/ATEX approved

Applications

- Oil and Gas - pipeline monitoring, wellhead production, Emergency shut-down (ESD)
- Power Distribution - Integration with RTUs (T200) and Controllers (ADVC) for substation switching and fault indication, protection and isolation, transformer monitoring
- WWW - PLC monitoring (water quality, flow, pressure, temperature etc..) for sewage treatment, flood management

Remote diagnostics and network management

Trio radios remote diagnostics and network management features can improve infrastructure costs by combining multiple vendor applications onto a single radio network in kiosk, substation and pole transformer monitoring applications.

Trio radio used in pole top transformer application

For more info:
Catalogue:
PCRED398085EN

Network Automation
Application Page 96

Protection, Control and Monitoring Easergy T200

Remote monitoring and control unit

Easergy T200 I

Overview

Easergy T200 has been specially designed to meet the needs of customers in managing MV substations, offering compact and open-ended solutions.

- Management of 1 to 16 switches or circuit breakers
- Backup power supply for motorisation, transmission equipment and control unit
- High-performance fault current detection
- Measurements for better control of the network load
- Network reconfiguration automation systems
- Communication with the control centre
- Monitoring, for local or remote operation
- Compatible with any type of SCADA system

Main characteristics

Switch/circuit breaker monitoring and control

- Fault current detection
- Automation functions
- Voltage or current measurements
- Concentration of Modbus communication devices
- Data and measurements archives
- Backup power supply
- 1 to 2 Serial ports
- 1 Ethernet and USB port

Applications

Network automation

- **Changeover switch (ACO)** - The changeover switch automation system allows for the automatic control and management of power supply sources in the MV secondary distribution network.
- **Bus tie coupling (BTA)** - Bus tie automation is an automation system for switching sources between two incoming lines and a busbar coupling switch.
- **Sectionaliser (SEC)** - The sectionaliser automation system opens the switch after a predefined number of faults during the voltage dip in the reclosing cycle of the upstream circuit breaker.

Features:

- new automation function (genset automation)
- a continuously updated range of protocols includes the main standards IEC 870-5-101, IEC 870-5-104, DNP3, Modbus and other proprietary protocols, which allows T200 integration into a wide range of existing monitoring and control platforms
- optimum transmission network management via two serial communication ports and an Ethernet port
- wide range of integrated modems, including radio, PSTN, GPRS, GSM and DL
- web interface for monitoring and control.

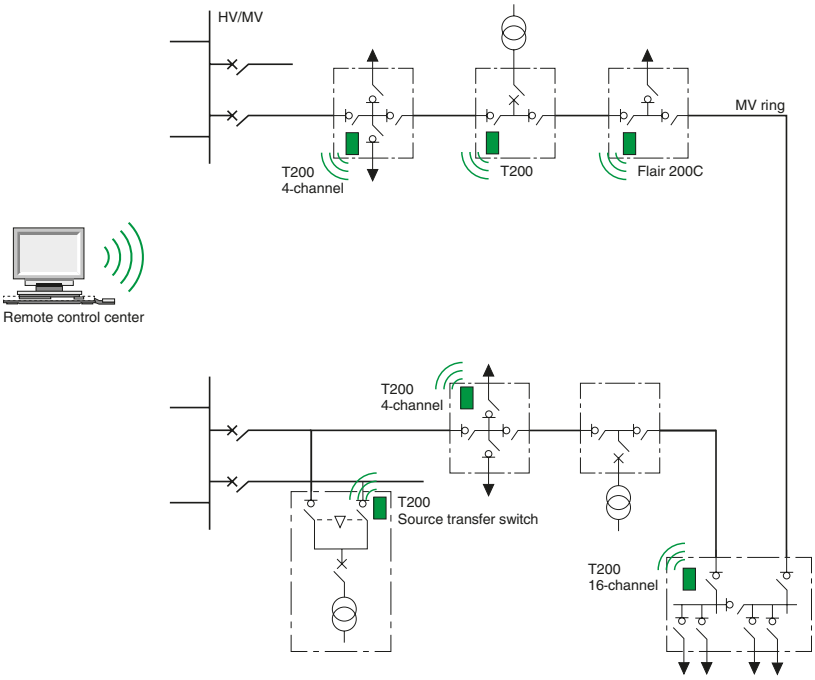

10

For more info:
Brochure: AMTED107018EN

Network Automation Application Page 96

Protection, Control and Monitoring Easergy Flite/Flair

Fault passage indicators

G200

Flair 2xD

Flite 1xx

Overview

Easergy Flite and Easergy Flair are the ranges of phase and Earth fault passage indicators for use in MV overhead and underground networks.

Easergy Flite and Flair ranges provide products for all the different MV distribution applications.

Easergy Flite - range for overhead
- Flite 110-SA - line-mounted single-phase ammetric fault detection
- Flite 116-SA/G200 - communicating line/pole-mounted ammetric fault detection

Easergy Flair - range for underground
- Flair 21D, 22D, 23D, 23DM - Ammetric fault detection incorporated in the switchgear. Flair 23DM with Modbus serial communication port
- Flair 219, 279 - wall-mounted ammetric fault detection
- Flair 200C - communicating wall-mounted ammetric

Main characteristics

- Ammetric fault detection
- Electrical measurements
- Concentration of Modbus communication devices
- Data and measurements archives
- Backup power supply
- 1 serial port
- 1 Ethernet and USB port

Applications

Fault detection

- **Ammetric fault detection** - The changeover switch automation system allows for the automatic control and management of power supply sources in the MV secondary distribution network.
- **Network monitoring** - The sectionaliser automation system opens the switch after a predefined number of faults during the voltage dip in the reclosing cycle of the upstream circuit breaker.

A continuously updated range of protocols, including the main standards IEC 870-5-101, IEC 870-5-104, DNP3, Modbus and other proprietary protocols, allows integration into wide range of existing monitoring and control platforms.

- Reliable MV network fault detection and indication, for complete peace of mind.
- Optimised actions through detailed local or remote information.
- Remote network reconfiguration through control units (GSM, Internet, standard protocols, etc.).

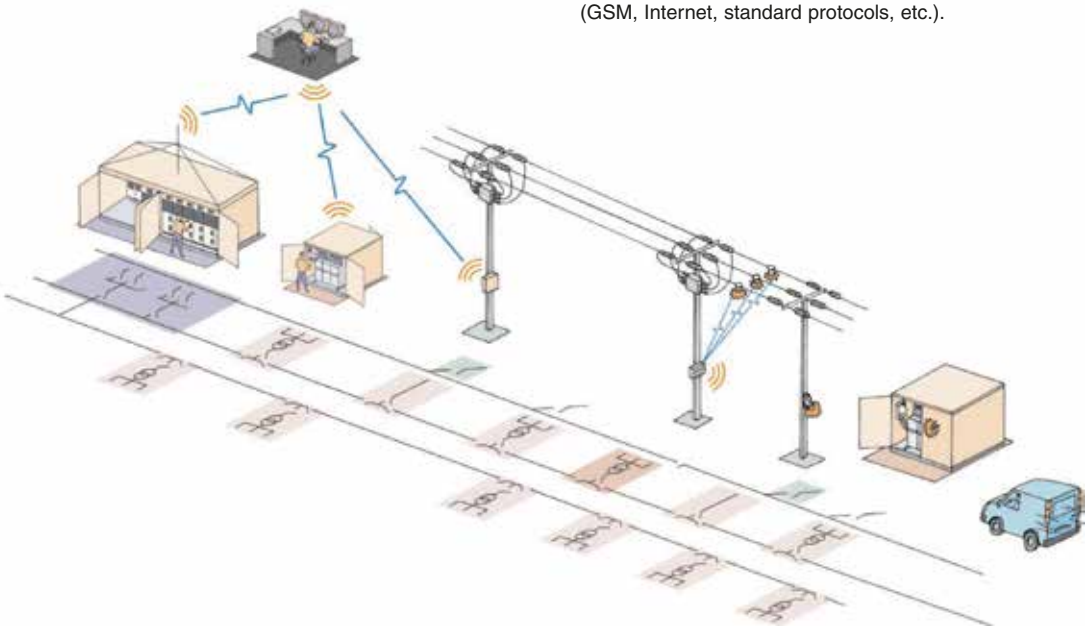

For more info:
Brochure:
NRJED111046EN

Protection, Control and Monitoring MiCOM C264

Substation control unit

MiCOM C264 in 40TE

MiCOM C264 in 80TE

Overview

The MiCOM C264 is the latest generation of modular substation computers. It can act as an IEC61850 client and server, a powerful Ethernet gateway, a measurement unit and can host fast automation (FBD) and slow automation (PLC). With its ability to function as a remote terminal unit (RTU), a bay controller, a data concentrator, a gateway or a voltage regulator, the MiCOM C264 is a compact solution to countless applications installed in demanding electromagnetic conditions.

Main characteristics

- 40TE/80TE/19" Racks
- Flexible I/Os (Digital and analogue)
- Direct CT/VT Connection: Measurements/Protection module
- IEC 61850 Station Bus communication
- IEDs Concentrator with up to 4 serial sub-networks
- Upstream SCADA Communication
- Built-in Automation
- User programmable logic FBD
- User programmable PLC Automation with IEC1131-3 Tools
- Local LCD display
- Energy and Power Quality
- Cyber security

Applications

- Remote Terminal Unit
- Bay Controller Unit
- Substation Controller Unit
- Sequence of Events Recorder (SOE- SER)
- Data Concentrator
- Power Quality monitoring
- Automatic Voltage Regulator - AVR

Built-in Automation

- Automatic Voltage Regulation
- Autoreclose
- Synchro check
- Load Shedding

MiCOM C264 - Data Concentrator

Shown below is a typical architecture diagram of the C264 acting as a data concentrator with IEC61850 servers.

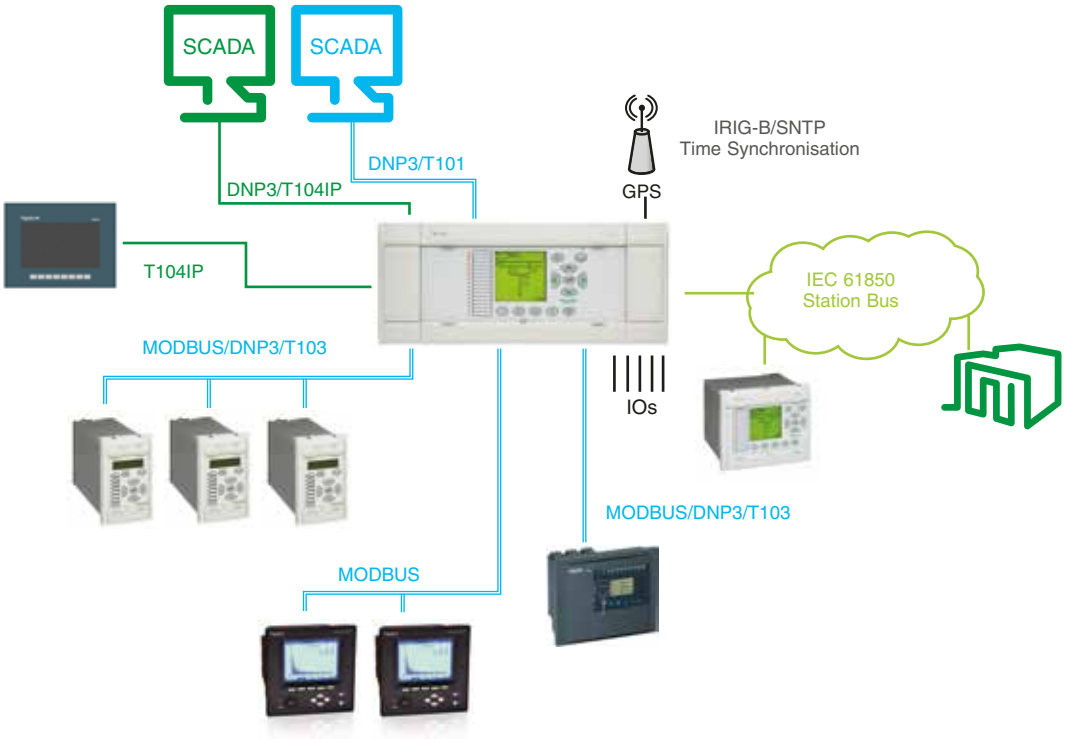

C264 data concentrator architecture

10

For more info:
Catalogue:
SEPED307026EN
SEPED303005EN

Protection, Control and Monitoring Sepam Series Overview

Modular range of digital protection relays

Sepam Series 10

Sepam Series 20

Sepam Series 40

Sepam Series 60

Sepam Series 80

Overview

With multi-functional Sepam protection relays, you can measure, manage, analyse and produce diagnostics for all applications in an installation. Range modularity makes it easy to select the relay corresponding exactly to your needs. The range is structured for typical applications (substations, transformers, generators, capacitors, busbars and motors) and provides the necessary functions for each application (protection, metering, control and monitoring, etc.). Starting with a Sepam base unit, complete solutions can be built up by adding input/output modules, sensors and communication modules.

Main characteristics

Sepam Series 10 - For simple applications

- Cost-effective solution for essential protection functions
- Phase and/or Earth-fault currents
- Logic discrimination
- Up to 7 outputs and 4 inputs
- Communication port available on Sepam 10A

Sepam series 20 - For usual applications

- Backlit LCD graphic bitmap display
- 16 inverse time over-current characteristic curves
- Easy software setup
- Two 86-cycle fault records, last trip fault values and last 64 time-tagged alarms
- Self-test diagnostics
- Wide range of control power inputs (AC/DC)
- Breaker Failure and Cold Load Pick Up functions for S24 and T24

Sepam Series 40 - For demanding applications

- Compact case provides standardised dimensions (< 100 mm deep)
- Directional over-current protection for dual incomers, couplings and closed-loop feeders
- Current and voltage inputs
- Setting software with Boolean logic equation assistance
- CT/VT and trip circuit supervision
- Twenty seconds of fault recording configurable for multiple captures, detailed history of last 5 trip reports and retention of last 200 time-tagged alarms
- 16 RTD inputs

Sepam Series 60 - For demanding applications

- Directional over-current protection for dual incomers, couplings and closed-loop feeders
- Current and voltage inputs
- Setting software with Boolean logic equation assistance
- CT/VT and trip circuit supervision
- Sixteen seconds of fault recording configurable for multiple captures, detailed history of last 5 trip reports and retention of last 200 time-tagged alarms
- Optional mimic-based display units are available to view a portion of single-line and phasor diagrams
- Battery backup for historical and fault waveform data retention
- Synchro-checks module available
- 16 RTD inputs
- 28 binary inputs and 16 outputs

Sepam Series 80 - For custom applications

- Standardised dimensions for enhanced protection of incomers/feeders, transformer, motor, generator, bus,capacitor-bank applications
- Differential protection of transformers
- Differential protection of motors and generators
- Protection for incomers, couplings and important feeders
- Expanded logic-equation capabilities
- Graphical assistance for setting software
- Battery backup for historical and fault waveform data retention
- Optional mimic-based display units are available to view a portion of single-line and phasor diagrams
- 42 binary inputs and 23 outputs

Applications

Protection of:

- substations incomers and feeders
- transformers
- motors
- busbars
- loss of mains
- generators
- capacitors

For more info:
Brochure:
NRJED111010EN

Protection, Control and Monitoring MiCOM Series Overview

Digital protection relays

MiCOM Px10

MiCOM Px20

MiCOM Px30

MiCOM Px40

Overview

The MiCOM range of protection relays offers varying levels of functionality and hardware options to best suit the protection requirements and allows the customer to choose the most cost effective solution for their application. The 10, 20, 30 and 40 series hardware platforms are the building blocks of the MiCOM protection relay range providing a wide variety of protection, control, measurement, monitoring and communication functions.

The MiCOM S1 Studio makes for easy setting and configuration of relays and management of relay setting files for all Micom relays.

Micom Relay Platforms and Applications

MiCOM Px10

- P111 - Auxiliary powered overcurrent and Earth fault
- P114D - Dual powered overcurrent and Earth fault, with settings via DIP switches
- P115 - CT or dual powered overcurrent and Earth fault, with settings via HMI menu
- P116 - Dual-powered overcurrent and Earth fault
- P211 - Motor protection

MiCOM Px20

- P12x - Directional and non-directional overcurrent and Earth fault
- P22x - Motor protection
- P52x - Feeder differential protection
- P72x - High impedance differential protection
- P82x - CB fail
- P92x - Voltage/frequency (e.g. load shedding)

MiCOM Px30

- P13x - Feeder protection
- P43x - Distance protection
- P53x - Line differential protection
- P63x - Transformer protection
- Px30C - Compact protection (cutdown versions, limited functionality, 2 inputs, 8 outputs)
- Px38 - AC Railway protection

MiCOM Px40

- P14x - Feeder protection
- P24x - Motor protection
- P34x - Generator protection
- P44x - Distance protection
- P54x - Current differential protection
- P64x - Transformer relay with sigma delta input modules
- P74x - Busbar protection
- P84x - CB fail, auto-reclosure function relay.

Applications

The MiCOM range offers comprehensive protection solutions at all power system levels such as Generation, Transmission and Distribution covering the following applications :

- Generator protection
- Transformer protection
- Feeder / Line protection
- Busbar protection
- Motor protection
- Interconnector / Grid Connection protection
- Voltage and Frequency protection
- Directional / Non-directional overcurrent & Earth fault protection
- AC Railway protection
- Distance Protection

For more info:
Catalogue:
NRJED111072EN
NRJED111073EN
NRJED112411EN

Protection, Control and Monitoring VAMP

Arc flash protection units

VAMP 121

VAMP 221

VAMP 321

Overview

VAMP arc flash protection is an extremely fast protection system for LV and MV switchgear and controlgear. It has been specially designed to maximise safety to personnel and to minimise material damage in the event of an arc fault. A VAMP arc protection system can principally be implemented in three different ways, as an autonomous master unit system, as part of the VAMP protection relay system or as an integration between a master unit system and the VAMP protection relay system.

VAMP 120

- Integrated 19-256 V a.c./d.c. aux. supply
- Up to 4 sensors
- Selective trip for 2 zones
- Operation time 7ms
- NO and NC trip outputs (Zone 1)

VAMP 121

- Up to 10 sensors
- Single trip contact
- Operation time 9ms
- Binary input for blocking or resetting (programmable) the unit
- Possibility for double arc channel activation trip criteria
- BIO light transfer to other VAMP device

VAMP 221

- Modular system consisting of a central unit, I/O units and arc sensors.
- Current and light tripping (can be configured for light only trip)
- Continuous system self-supervision
- Point arc sensor or fibre loop sensor connections
- Circuit breaker failure protection (CBFP)
- Programmable operation zones

VAMP 321

- Modular system consisting of a central unit, I/O units and arc sensors
- Operation on simultaneous current and light or on light only
- Event logs, disturbance recording and real-time clock
- High speed output, HSO: 1 ms
- Point arc sensor or fibre loop sensor connections
- Circuit breaker failure protection (CBFP)
- Programmable operation zones

10

Main characteristics

- Operation on light only
- Support point or smoke sensors
- Simple installation
- Self-supervision

Applications

- Wind Power
- Motor Control Centres (MCC)
- Utilities
- Marine

Why ARC Flash Protection

When the traditional time-grading or blocking based protection coordination principle is used, the traditional protection systems may not provide fast enough protection of substation faults. Further, high-impedance type of Earth-faults may cause prolonged operation times of Earth-fault relays leading to the significant release of the arcing energy. These facts pose a considerable risk to human beings and economical assets.

Switchgear explosion due to arc fault

For more info:
Catalogue:
PLSED106016EN

Metering Solutions ION7550/ION7650

Advanced energy and power quality meter

ION7550

Overview

Used at key distribution points and sensitive loads, ION7550 and ION7650 meters offer advanced power quality analysis coupled with revenue accuracy, multiple communications options, web compatibility and control capabilities.

- Monitor compliance with International Quality-of-Supply Standards (IEC 61000-4-30 class A, EN50160, IEEE 519, IEEE 1159, and CBEMA/ITIC)
- Evaluate flicker based on IEC 61000-4-15 and IEEE 145

Electrical characteristics

Measurement	Accuracy
Voltage (L-L, L-N): per phase, min./max., unbalance	0.1% reading
Frequency: present, min./max.	± 0.005 Hz
Current (I1, I2, I3)	0.1% reading
Current (I4, I5)	0.4% reading
Power: real (kW), reactive (kVAR), apparent (kVA), per phase, total Power demand: kW, kVAR, kVA	IEC 62053-22 class 0.2S
Energy: real (kWh), reactive (kVARh), apparent (kVAh), rec/del	IEC 62053-22 class 0.2S
Power Factor (at unity PF)	0.2%

Main characteristics

Power quality analysis:
- ultra-fast detection and capture of transients (20µs at 50Hz)
- detection and capture of voltage sags and swells
- waveform recording up to 1024 samples per cycle
- advanced alarms with set point learning capability.

Applications

- Power quality analysis
- Disturbance detection
- Energy costs reduction
- Equipment monitoring and control
- Energy metering, cost allocation

Complete communications:
- multiple communication ports (RS232/485, RJ45, fibre, optical port, internal modem)
- gateway functionality (Ethernet, modem)
- web server, FTP server, SMTP (email) data push
- various supported protocols (Modbus RTU and TCP master/slave, IEC61850, DNP3.0, SNMP, ION, MV90)
- numerous I/O options.

Internal memory for data and event logging:
- min/max, trend, forecast, events/alarms, 1 ms timestamp, GPS.

Security:
- multi-user access with multi-level security, anti-tamper seal protection.

Modular, extensive programmability
ION7550 and ION7650 meters now support IEC61850 for better interoperability between systems, and reduced deployment time and cost.

Metering Solutions
ION8800

Energy revenue and power quality meter

ION8800

ION8800 Meter

Overview

Used at interconnection points on medium and high voltage networks, ION8800 is designed for tariff metering and power quality monitoring. It includes revenue accuracy, multiple communications options, web compatibility and control capabilities.

3 base-model feature sets:

- ION8800C – basic tariff / energy revenue meter with sag / swell monitoring
- ION8800B – ION8800C + EN50160 compliance monitoring
- ION8800A – ION8800B + waveform capture and transient detection.

Electrical characteristics

Measurement	Accuracy
Voltage (L-L, L-N): per phase, min./max., unbalance	0.1% reading
Frequency (42-69 Hz): per phase, total	± 0.005 Hz
Current (I1, I2, I3, I4): per phase, total, min./max., unbalance Current demand: present, min/max, predicted	0.1% reading
Power: real (kW), reactive (kVAR), apparent (kVA) Power demand: present, min./max., predicted	0.2% reading
Energy: real (kWh), reactive (kVARh), apparent (kVAh), bidirectional, net, total	IEC 62053-22/23 class 0.2S
Power Factor: per phase, total	0.5%
Crest factor current channels	1.0%

Main characteristics

Revenue metering:
- meets IEC62053-22 Class 0.2S
- multiple tariffs and time-of-use (TOU) calculations
- password protection and anti-tamper seal protection.

Power quality analysis:
- monitor compliance with international Quality-of-Supply Standards (IEC 61000-4-30 class A, EN50160, IEEE 519, IEEE 1159, SARFI)
- ultra-fast detection and capture of transients (20µs at 50Hz)
- detection and capture of voltage sags and swells
- waveform recording up to 1024 samples per cycle
- advanced alarms with set point learning capability.

Applications

- Revenue metering at generation, transmission, or distribution locations
- Energy availability and reliability
- Power quality analysis
- Disturbance detection

Complete communications:
- multiple communication ports (RS232/485, RJ45, fibre, optical port, internal modem)
- gateway functionality (Ethernet, modem)
- web server, FTP server, SMTP (email) data push
- various supported protocols (Modbus RTU and TCP, DNP3.0, SNMP, ION).

Tailor the meter to the application, with numerous I/O options:
- solid-state Form A and Form C digital outputs
- mechanical alarm relay
- high and low voltage digital inputs
- retrofit compatible with IEC/DIN 43862 19” rack mount series
- essailec connector with common measurement and energy pulsing pin-out greatly reduces installation costs
- the ION8800 passed the NMI M6 Pattern Approval for revenue metering.

For more info:
Brochure:
NRJED111002EN
NRJED112358EN - SUI
NRJED112403EN - PACiS Utility
NRJED110003EN
NRJED110004EN

Software
PACiS Substation Control

Electrical substation protection, control and monitoring solution

Overview

Substation protection, automation and control solution.

Scalable IEC61850 designed substation automation system from a single controller to a complete multi-ring architecture.

PACiS core components are:
- C264 - Substation control unit
- A300 - Solid state protocol gateway (IEC 61850, DNP3, etc.)
- Hxxx - IEC61850 Ethernet switches and modules
- SUI - Substation monitoring and control software (HMI)
- SCE - System configuration editor
- SMT - System maintenance tool
- iFLS - Fast load shedding software

The PACiS components are deployed along side with IEDs to provide a complete integrated automation solution:
- MiCOM protection relays
- Sepam protection relays
- ION power meters
- Third party IEDs

Main characteristics

- Native IEC61850 applications
- IEC61131-3 automation compliant
- Fast self-healing redundant network (<1ms)
- Disturbance record and waveform oscillography management
- Cyber security

Applications

- Commercial building, Healthcare center, Mining, Oil and Gas, Utility
- Electrical Control & Monitoring System (ECMS)
- Substation Automation (AVR, ATS, etc)
- Self Healing Loop Automation
- Load shedding and load management
- Emergency generator and energy storage management

Supported protocols

- IEC61850
- DNP3/DNP3 over IP
- IEC608705-5-101, IEC608705-5-103, IEC608705-5-104
- Modbus
- HNZ

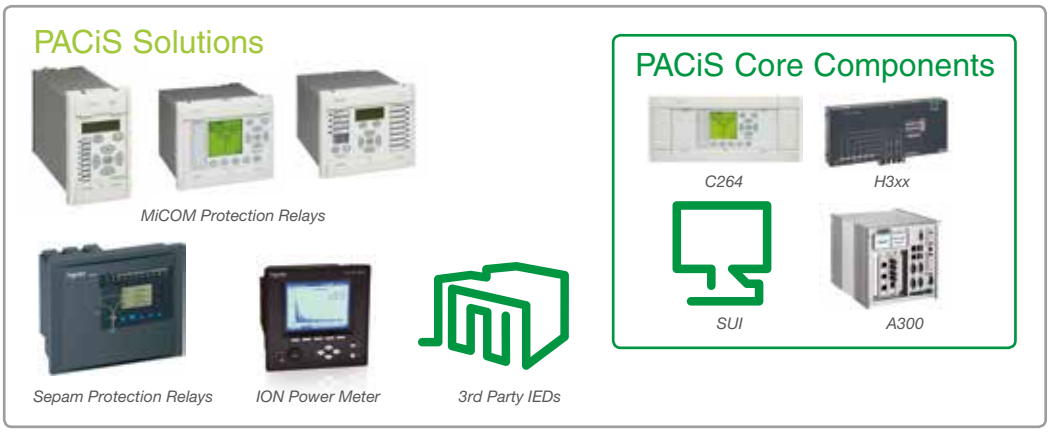

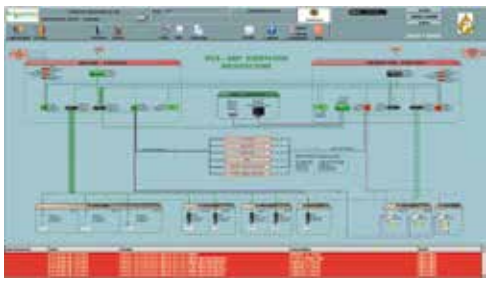

PACiS SUI

Software
ADMS

Advanced distribution management system

Overview

The Schneider Electric ADMS provides a real-time network control system. The system has been independently recognised by the Gartner Technology research firm as the most advanced DMS on the global market and rated it with the highest possible rating of “strong positive”. The software incorporates real-time SCADA, OMS and DMS including advanced features, such as embedded volt/VAR Optimisation, fault management in the form of automatic fault detection isolation and supply restoration, near-term load forecasting, and distributed energy resources support, network planning tools etc. on a single platform using a single user interface.

The ADMS is a tool that enables users to efficiently plan, operate, and work on a distribution network. It facilitates the analysis and monitoring of distribution networks in real time, and also provides a study or planning mode capability for both backward and forward review to analyse different running arrangements identify potential hotspots and facilitate options to improve network reliability and lower costs.

The ADMS is managed with standard interfaces such as CIM, IEC, DNP, ICCP and is a key offering for the smart grid solution.

Main characteristics

- Real time network monitor and control (SCADA)
- Mathematical network model and power applications (DMS)
- Efficient fault management and voltage improvement
- Network analysis (short-circuits, relay protection, losses, reliability, performance)
- Optimisation and reduction of investments in building power facilities and network automation
- Reduction of network peak load and power losses
- Improvement of power quality and customer services
- Local supervision system based on Schneider Electric’s OASyS SCADA

Real-time network control system with integrated SCADA/DMS/OMS/DSM in a single product:

SCADA control and data acquisition
Network model with state estimation
DMS - with a wide array of network management applications
OMS - outage management system to manage trouble calls and a mobile workforce and to provide fault prediction and outage statistics
DSM - demand side load management
GUI - schematic and geographical displays of HV/MV/LV networks, including all remote and manually operated devices
VSSM - validated switching sequence management, improves safety/reliability of network operation
IVVO - integrated voltage/var control (optimisation), to reduce peak demand and load flow losses
FLISR - fault location, isolation and supply restoration, to reduce outage time and improve regulatory performances

Simulation environment
Training environment
Historical services
Mobile workforce services
Standard Interfaces

Applications

- Smart grid

ADMS benefits

- Improved safety and reliability of the network operation
- Reduced peak demand and load flow losses
- Reduced customer outage time
- Improved (regulatory) performance indices
- Improved utilisation of network facilities:
  - reduced investment
- Improved power quality
- Improved customer services
- Increased utility profit

Supported protocols

- DNP v3.0
- Modbus
- IEC-101, IEC-104, IEC-103
- ICCP
- OPC
- Many other protocols supported

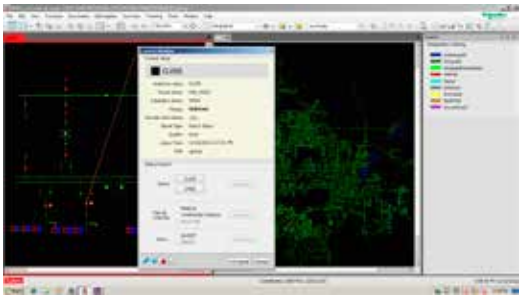

Dynamic mimic diagram GUI

Network builder GUI

For more info:
- GMX Technical Brochure: SAUAMTED1270511
- KPX Technical Brochure: SAUAMTED1030611
- KPX Catalogue: AMTED1280809AU

Transformers and Prefabricated Substations GMX, MINERA and TESA

Ground and pole-mounted oil-immersed transformers

GMX

TESA

Overview

Hermetically-sealed oil-immersed transformers up to 33kV and 5MVA. Custom-designed (GMX and MINERA or pre-designed (TESA) to suit most distribution transformer applications.

Schneider Electric has a long history of transformer manufacturing in Australia. Our transformer factory is located in Benalla, Victoria. A wide range of oil-immersed transformers and transformer solutions are designed to meet different specifications and applications.

- GMX - ground mounted transformer up to 33kV and 5MVA
- TESA - ground mounted transformer up to 22kV and 2.5MVA
- MINERA - pole mounted transformer
- KPX - prefabricated (kiosk) substation

Main characteristics

In accordance with the requirements of AS 2374.1.2 all Schneider Electric distribution transformers are fully compliant with (MEPS). Minimum Energy Performance Requirement). The scope of AS 2374.1.2 covers oil-immersed and dry-type distribution transformers with power ratings from 10 kVA to 2500 kVA intended to be used on 11 kV and 22 kV networks. Compliance to MEPS is a legally enforceable requirement on all manufacturers since the 1st October, 2004.

Applications

Indoor and outdoor transformers suitable for industrial, commercial, mining or infrastructure applications. They are suited to applications where low voltage switchgear is to be installed within the operating plant remote from the transformer.

Transformer optional features

MV switch fuse or circuit breaker transformer protection.

Oil temperature indicator, integrated safety detector, pressure relief device, winding temperature indicator, marshalling box, wheels.

Integrated safety detector

The integrated safety detector combines the functions performed by a number of transformer accessories in a single, compact and reliable instrument. It is composed of a robust plastic body, watertight and resistant to extreme climates.

This device detects 4 functions:

- pressure
- temperature
- oil Level
- gassing.

General features

- Degree of protection (EN60529): IP66
- Degree of shock tightness (EN50102): IK07
- Temperature resistance: -40ºC to 120ºC
- Max. rated pressure: 500 mbar

For more info:
Brochure:
NRJED311021EN

Transformers and Prefabricated Substations MINERA

Medium voltage power transformer

MINERA transformers

Overview

The MINERA oil-immersed medium voltage power transformer is dedicated to all applications up to 170kV and 80 MVA. Schneider Electric's R&D team has created a variety of MINERA transformers to meet both utility and industrial requirements. The superior reliability of the transformer means that it is highly suitable for the oil and gas market.

Main characteristics

Rated power from 2.5 up to 80 MVA; rated insulation level up to 170 kV; rated frequency 50 or 60 Hz; mineral, synthetic or natural ester oil insulating liquid; conventional or reduced losses; wide range of accessories; high capacity of cooling options such as ONAN, ONAF, OFAF or ODWF; off-circuit tap changer (OCTC) or on-load tap changer (OLTC); hermetically sealed or breathing type with conservator.

Applications

- Utilities: transmission and distribution network, automatic voltage regulator
- Power generation: hydro, nuclear, thermal, photovoltaic
- Small industries: textile, automotive, pharmaceutics, food
- Renewable energies: solar, wind onshore and offshore, biomass
- Mining: ground-mounted, under ground mounted, heavy polluted area
- Metal: furnace, cycloconverter load, rectifier load
- Oil and gas: onshore, offshore, FPSO, hazardous area

Magnetic core

The transformer's magnetic core is manufactured from a high grade, cold-rolled, grain-oriented silicon steel. The lamination stacking is either butt-lap or step-lap-type. The magnetic core is generally a multi-layer circular cross section and the slitting and cutting of the magnetic core is made by automated machines. In order to reduce transformer sound level to a minimum, the magnetic core and its framework are carefully sized to minimise the vibrations and, in particular, magnetostriction effects, which constitute the main sources of sound in medium power transformers.

Transformers and Prefabricated Substations Trihal

Cast resin dry-type transformers

Trihal

Trihal with forced cooling

Protective enclosure IP21

Overview

Trihal is an indoor three-phase dry-type transformer up to 36kV and 5MVA. It is cast under vacuum in epoxy with a fire-proof filler. The essential component of the active filler is trihydrated alumina, which is the origin of the Trihal trademark.

Trihal transformers are available in a wide range of voltages up to 36kV and 160 to 5000kVA. Transformer can also be equipped with different enclosures to suit your power distribution applications.

- IP 00 - transformer without enclosure
- IP 21 - transformer with protective enclosure
- Higher IP rating for outdoor transformers available on request

Main characteristics

IEC 60076-11 standard defines 3 tests on one and the same dry-type transformer.

- **F1 (fire behaviour)** - self extinguishing test
- **C2 (climatic)** - temperature shock test
- **E2 (environment)** - condensation, humidity and salt water immersed test

Applications

Suitable for buildings, commercial and industry applications. Trihal transformers are exceptional for hoisting and lifting applications, due to the forced air cooling option allowing temporary overloads.

Design considerations

Transformer overload: due to ambient temperature variations transformer may need to be derated.

Thermal limits: for class F transformer, the temperature settings shall not exceed 130°C for over-temperature alarm and 150°C for trip.

Air forced cooling: forced ventilation allows up to 40% temporary overload without major modifications to your transformer.

Dimensions X in mm(1)

Insulation (kV)	Full Wall	Ventilation Grill
7.2*	90	300
12*	120	300
17.5*	160	300
24*	220	300
36*	320	400

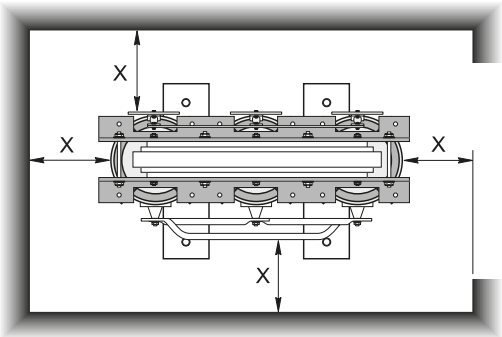

Figure 1. Insulation distance without enclosure IP00.

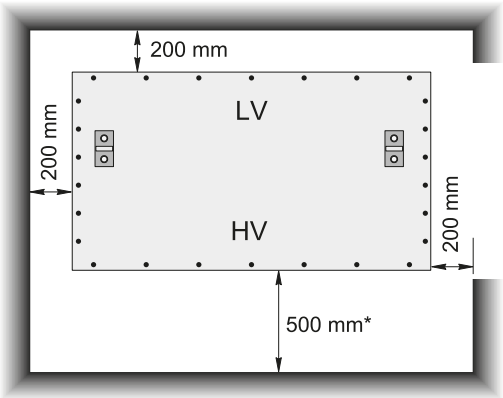

Figure 2. Insulation distance with enclosure access to the variation tapping links.*

Transformers and Prefabricated Substations KPX

Medium voltage kiosk substation

KPX MV kiosk

Overview

Prefabricated (kiosk) substations are defined as an enclosure containing transformers, low voltage and high voltage switchgear, connections and auxiliary equipment to supply low voltage energy from a high voltage system or vice versa.

Kiosk designs may have different configurations depending on the requirements of the site "footprint" and access.

- KPX - elongated design with access from both ends
- KPX² - square design with access from one side

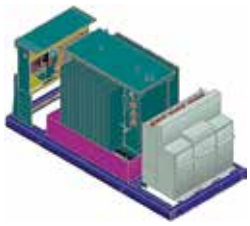

KPX prefabricated kiosk substation

Main characteristics

Safety

Kiosk substations contain electrical equipment, often located in a public environment, requiring them to meet the highest safety standards.

The risk of equipment failure in a kiosk substation is minimised through the design. In the rare occasion of medium voltage equipment failure, an internal arc rated kiosk design minimises the risk of injury to near public or an operator working with the kiosk door open.

Applications

Wind farm solutions - The initial design of a wind farm can have profound implications for its future profitability. Once a site has been identified and a decision taken to invest in its development, the wind farm design process begins. The fundamental aim is to maximise energy production, minimise capital and operational costs and stay within the constraints imposed by the site. The kiosk substation for wind farms have to take into account many variables like the environment (oil containment), exposure to windy weather and connection to the grid.

Electrical utility solutions - For electrical utilities, long blackout periods and voltage fluctuations are unacceptable. Their primary needs include safety of supply and continuity of service, due to increasing pressures from the mandatory measurement of customer service and customer expectations.

Defence solutions - Defence substations differ from those provided by electrical utilities, as typically they also form part of the emergency power distribution system and contain control and communications equipment needed to effectively distribute and control emergency power.

Industrial solutions - Reliability of supply for industrial customers is critical. A power outage can cost millions of dollars depending on the type of industry. Their primary needs include quality of supply, energy efficiency and continuity of service.

Defence-style cyclone-rated kiosk

Schneider Electric has recently designed a defence style kiosk for use in cyclone regions that has been independently tested and verified to meet cyclone criteria AS/NZ 1170.2.2011. The kiosk is suitable for cyclonic region D and terrain category 2 and has been tested for an ultimate wind design speed of 77m/s. The construction of the upper and base frames consists of cross members made from hot dipped galvanised carbon steel and the enclosure panels are made using marine grade aluminium.

KPX prefabricated (kiosk) substation up to 33 kV

Overview

High voltage/low voltage (HV/LV) factory tested outdoor prefabricated (kiosk) substations have been largely used for more than 30 years. Prefabricated substations are defined as an enclosure containing transformers, low voltage and high voltage switchgear, connections and auxiliary equipment to supply low voltage energy from a high voltage system or vice versa.

The first prefabricated substation in Australia to successfully pass a type test for personnel protection from internal arc faults to AS 62271.202, was manufactured in Schneider Electric's Benalla factory in 2007. This was followed by successful testing of a ring main unit (RMU) outdoor enclosure in 2008.

Schneider Electric continues to design prefabricated substations at the highest level of safety for the operator and the public.

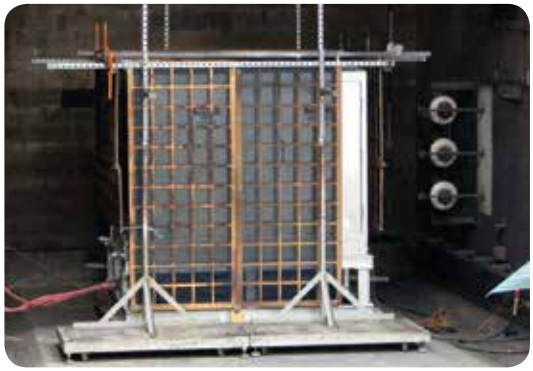

Safety

The risk of equipment failure in a kiosk substation is minimised through the design. In rare occasions of medium voltage equipment failure, an internal arc rated kiosk design minimises the risk of injury to nearby public or an operator working with the kiosk doors open.

The design ensures that extremely hot gases generated during a fault are cooled via a patented filter, reducing the effects of overpressure and flame within the enclosure. The design limits the release of projectiles and flaming particles, which could potentially injure the public, operators or start bushfires.

Schneider Electric has invested in safety studies over the years to provide the safest possible solutions for our customers and general public.

Versions of our new KPX, KPX² and RMU kiosk designs have been type tested to ensure personnel and operator protection against internal arc faults, as per Annex A of Australian Standard AS 62271.202. They have an internal arc classification of IAC-AB and are rated to withstand an internal arc fault of 20kA for 1s. If internal arc classified kiosks are required, this option must be requested at quotation.

Environment

A kiosk substation should be designed to ensure internal connections are protected from extreme environmental conditions, such as high temperatures, rainfall, dust and wind. Schneider Electric's rigorous testing and graphic modelling ensures proper ventilation, protection against incoming water, sealed connections and secure locked doors.

The KPX kiosk design is not only protected against the environment, they also help to protect the environment. All our kiosk substations incorporate the option for full transformer oil containment. If the transformer leaks oil, there is no risk to environment, as the oil is contained inside the kiosk. This feature is extremely important for applications close to water catchment areas to avoid possible pollution.

At the end of the kiosk life cycle our service offer makes sure that all materials are handled with respect to the environment.

Smart kiosk

Combining our kiosks with remote monitoring and control from the Easergy range, will help to reduce outage times and significantly improve service quality and continuity of energy supply. Modern communication infrastructure ensures that a network management system can be set up step-by-step according to your investment plan, gaining benefits from the start. Well planned and designed loop automation systems ensure that the majority of your customers can be reconnected to the network during the first minute after an outage occurs.

Value throughout your system lifecycle

Schneider Electric Services offer the benefits of true lifecycle support for your electrical distribution systems. Our capabilities enable us to provide a wide range of services and solutions for your installations, from initial concept design through to end-of-life management and renewal programs.

Our highly trained services team work with you to understand your needs and offer individually tailored solutions, allowing you to focus on your core business. Schneider Electric has global and local project teams to manage your automation, electrical distribution and energy management projects.

With a full range of services encompassing strategic consulting, design and engineering, maintenance contracts, support and education, Schneider Electric is the right partner for your projects and engineering challenges.

Schneider Electric Services provide specialist manufacturer's support for medium voltage equipment – delivering value throughout your system life cycle.

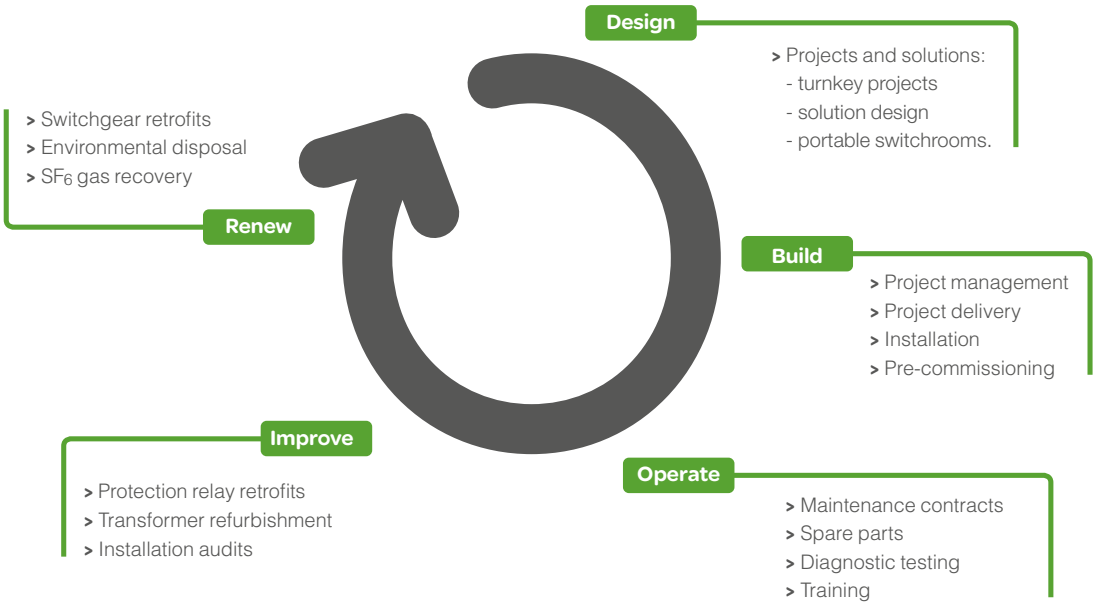

Operate

Spare parts

Maximise the uptime your operations by ensuring you have the appropriate spare parts for your MV distribution equipment. By having access to the right spare parts at the right time you can ensure that your equipment is returned to service in the shortest possible time, avoiding lost revenue and safeguarding your assets and business.

Schneider Electric supplies original spare parts for both current and superseded Schneider Electric product ranges (including Merlin Gerin, Yorkshire Switchgear and Magrini Galilleo). We can provide assistance in identifying the required parts for your equipment from our extensive product libraries.

The use of OEM parts ensures that your MV equipment performs to in accordance with the original specifications. This can be further assured by having your spare parts fitted and tested by Schneider Electric service technicians.

There are four major phases in the product life cycle:

Commercialisation period

The period is launched on the market and is included in the Schneider Electric catalogue. The supply of spare parts is guaranteed.

Guaranteed spare parts supply period

If the product is withdrawn from the market, Schneider Electric will continue to supply spare parts for a limited period of time. Generally speaking, the average guaranteed spare part supply period after the end of commercialisation is:

- Medium voltage: 12 years
- Low voltage: 10 years
- Compact (accessories - devices): 3 years
- Electronic equipment: According to the range

When the end of the guarantee period is reached, the product is considered to be expired.

Non-guaranteed spare parts supply period

As of the expiry date, the product is considered to be expired. Spare part stock and supply are no longer guaranteed after the expiry date. This period ends on the date on which the spare part offer is ended. On that date, the stocks are entirely destroyed as well as the manufacturing tools.

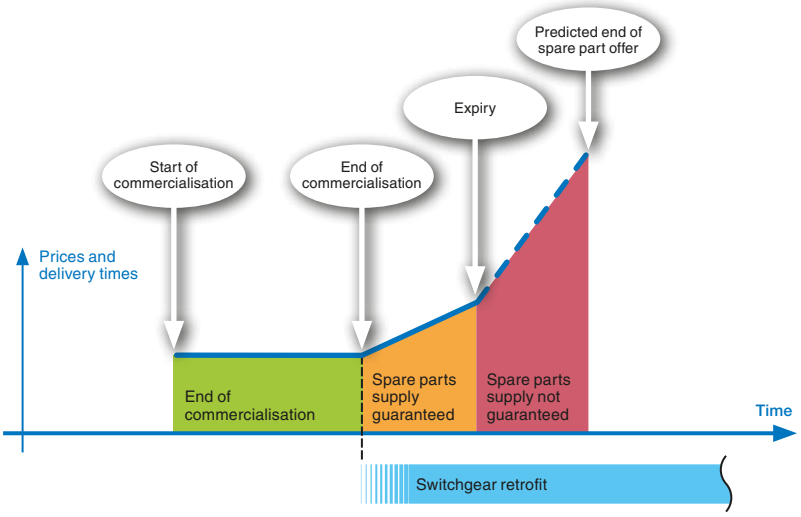

Device retrofit period

Commercialisation of a retrofit offer for the replacement of old switchgear and protection devices. The supply of retrofits will stop at the end of the commercialisation of the new devices used. The spare parts for these retrofits will therefore be managed as described above.

Services

Improve

Protection relay retrofit

Improve the performance of your switchgear protection and control systems with Sepam and MiCom.

The period is launched on the market and is included in the Schneider Electric catalogue. The supply of spare parts is guaranteed.

- Replace old style single function protection units with a single multifunction protection relay
- Improved safety and reliability due to digital technology
- Benefit from enhanced functionality such as diagnostic functions and communications
- Pre-engineered solutions for legacy Schneider Electric relays (e.g. Sepam 2000)
- Custom engineered protection retrofit solutions

Renew

ECOFIT™

Renew your operations and extend the life of your medium voltage installation with our circuit breaker retrofit solutions.

- Pre-engineered, type tested solutions
- Superior performance
- Choice of SF_6 gas or vacuum technologies
- Increased safety and reliability
- Minimal downtime due to roll-out, roll-in solution
- Reduced maintenance and spare parts costs
- Phased implementation for budget control

Our retrofit solutions cover the full range of legacy Schneider Electric brands, including:

- Merlin Gerin: Belledonne
- Merlin Gerin: Fluair
- Merlin Gerin: Vercors
- Magrini Gallileo: Epoclad range
- Yorkshire: YSF6 range
- English Electric: OLX range
- Avera: HMC
- Avera: FP

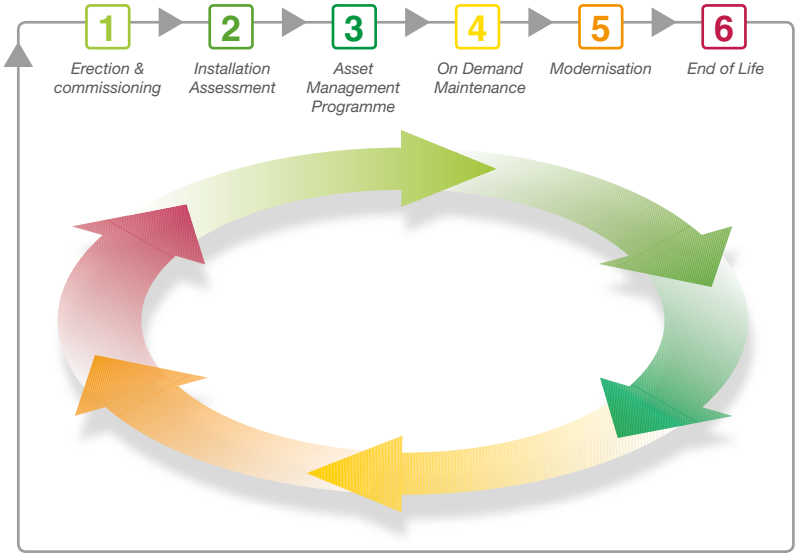

14

Renew

Environmental disposal

Schneider Electric has developed a total solution for managing the disposal of your used switchgear, from collection through to the completion of recycling and destruction processes. Our environmental disposal offer tracks your equipment through all phases of the process and provides documentation to confirm the destruction of the equipment and the quantity of SF_6 gas that has been reclaimed.

Giving SF_6 a second life

Sulphur Hexaflouride (SF_6) is a gas that is unparalleled in Medium Voltage (MV) switchgear applications. The technical and economic performance of MV Switchgear using SF_6 is unrivalled to this day. Due to its great stability and its capacity for immediate recomposition after electrical arcing, it contributes directly to the very long life of such equipment. Furthermore, the characteristics of SF_6 allow it to be recycled and ultimately reused. In the electrical industry and especially the medium voltage industry, SF_6 is used in a sealed-for-life enclosure within the equipment. SF_6 can only have an environmental impact if it is released to the atmosphere, for example, through improper disposal of switchgear at the end of its life.

1kg
of SF_6 gas = 23.9 tonnes CO_2 in terms of global warming potential*.

SF_6 gas recovery system

Example recyclables in RM6 equipment

>80%
of distribution switchgear can be recycled.

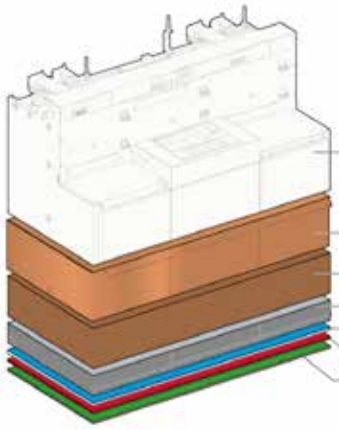

	IDI	IQI
Ferrous metal	78.5%	72.5%
Non-ferrous metal	13.3%	11.3%
Thermohardening	4.7%	11.3%
Thermoplastics	2%	4.1%
Fluids	0.5%	0.4%
Electronic	0.7%	0%
Other	0.4%	0.4%

1 Collection

MV switchgear is collected from the customer's site and transported to our facility. Our procedures follow EPA guidelines, including the tracking system used to record each item of equipment throughout the disposal process.

2 SF_6 gas recycling

SF_6 gas is recovered using our specialised evacuation process, which accurately records the quantity of gas recovered. The SF_6 gas is cleaned and tested to ensure maximum recycling.

3 Equipment recycling

The remainder of the equipment is destroyed using a specialised process, which separates the ferrous, non-ferrous metals and non-metallic (plastics) materials. This enables us to achieve maximum recycling of your used MV switchgear.

4 Certificate of destruction

A certificate of destruction is issued at the conclusion of our recycling process. The certificate includes the quantity of recovered SF_6 gas and equivalent CO_2, which supports your reporting obligations.

Applications and Solutions

Automatic transfer system

Because a MV power supply interruption is unacceptable, especially in critical applications, an automatic system is required for MV source transfer.
For your peace of mind, RM6 enables automatic control and management of power sources in your medium voltage secondary distribution network with a short time (less than 10 seconds), guaranteeing the hi reliability of your installation.

ATS 1/2

On loss of voltage on L1, the automatic transfer system automatically switches to L2. Consider a network with two medium voltage network sources supplying a transformer. With the automatic control feature provided by the T200, on loss of voltage on the main line L1, the automatic transfer system automatically switches to the backup line L2. The flexibility of the T200 allows for 3 different operating modes to dictate what will happen after switching to the backup line.

Case 1: as soon as voltage returns to L1, the ATS changes back to the main line.

Case 2: the ATS does not change back to the main line. Flow of power continues on L2 except in the event of a voltage loss on L2.

Case 3: ATS does not change back to the main line. Flow of power continues on L2 regardless of the voltage on the two lines.

For a network with a changeover between a distribution system line and a generator, the option for 3 different operating modes is also available; similar to the example above. The ATS also provides the option for sending out a generator start up signal for this configuration

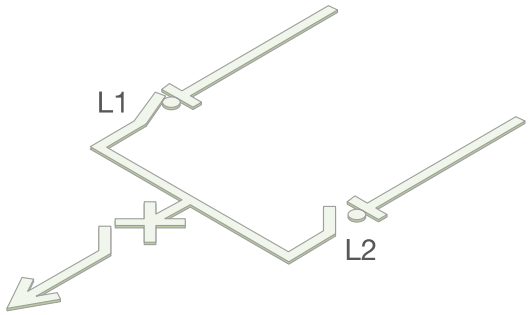

ATS 2/3

On loss of voltage on one line, the ATS opens this line and closes the bus coupler. The combination of the RM6 switchboard and Easergy T200 provides a hi-reliable and pre-tested solution that ensures the availability of your energy.

Consider a source changeover between 2 incoming lines L1 and L2 and a busbar coupling switch. On loss of voltage on the main line L1, the ATS open this line and closes the busbar coupler. This allows that load to be power from the backup line L2. The flexibility of the T200 allows for 2 different operating modes to dictate what will happen next in this configuration.

Case 1: as soon as voltage returns to L1, the ATS changes back to the main line. (the switch for L1 closes and the busbar coupler is opened)

Case 2: voltage presence is monitored during a configurable period. If the voltage disappears during this period, the coupling switch is opened and the ATS is locked.

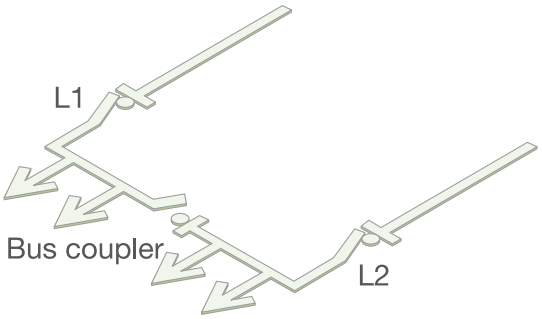

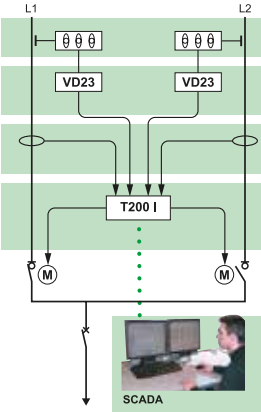

2 VPIS-VO	Voltage sensor: dedicated version of VPIS with voltage output signal.
2 VD23	Voltage detector: a relay is activated when a loss of voltage is detected from the VPIS voltage output signal.
2 FPI	Fault passage indicator: if a fault current is detected, the automatic transfer system is locked in order to avoid closing the healthy line onto the fault.
1 T200 I + switch function motorised	From the digital input coming from the VD23 and the FPI information, T200 I takes the decision to switch from one line to another.
	Communication to SCADA: optionally, communication facilities may be added. *Modems:* PSTN, Radio, GSM/GPRS, Ethernet,... *Protocols:* Modbus, IEC 870-5-101, DNP3,... *Functions:* dual port, remote configuration,...

Network automation

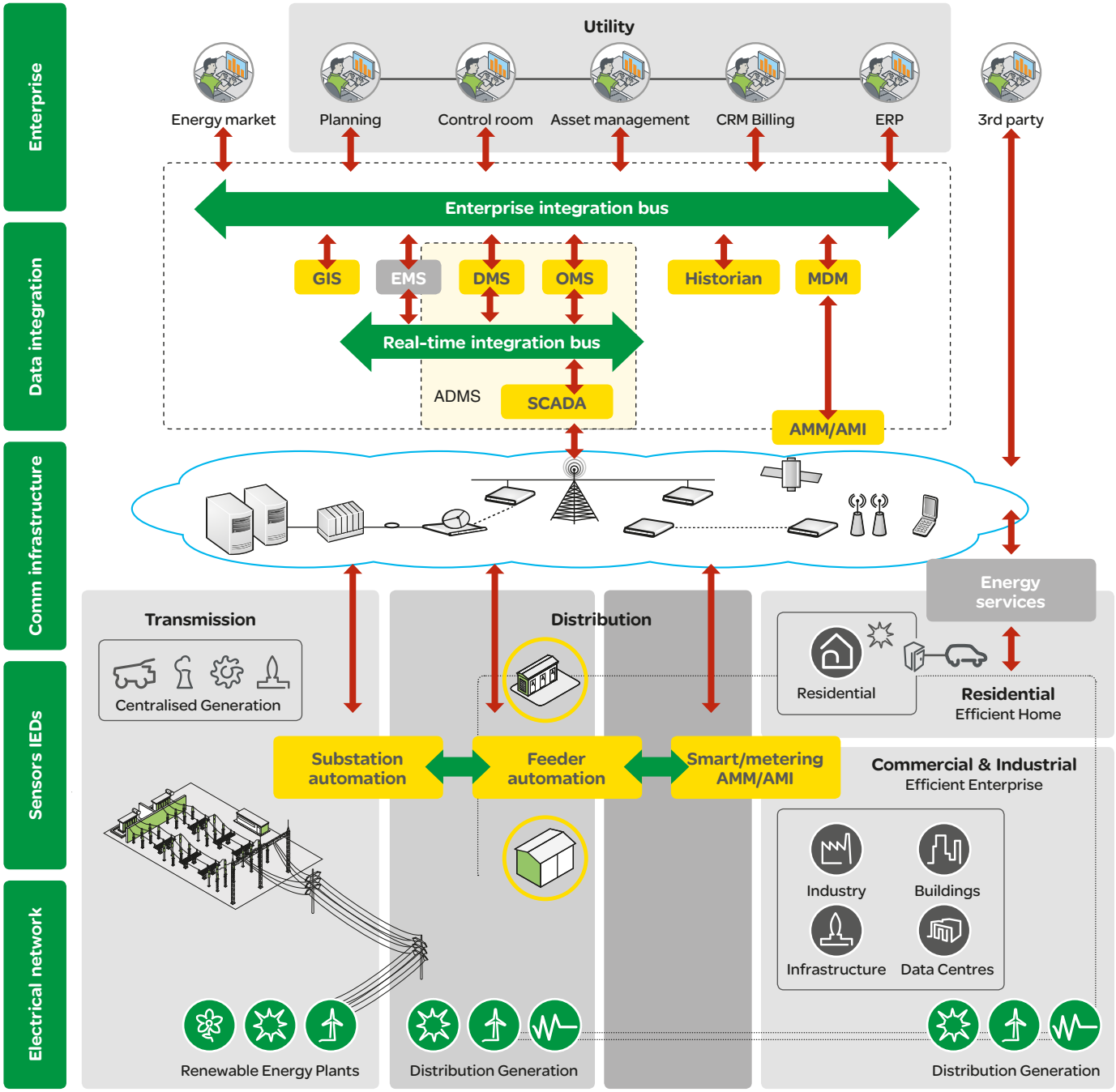

Schneider Electric's range of switchgear can be remotely controlled or provide fully automatic supply restoration. The switchgear can be readily embedded in a centralised scheme or can have automation restoration logic embedded in the firmware of the associated controllers such that the switchgear can, intelligently and independent of other SCADA systems, restore supplies to all healthy sections of a circuit following a fault. This restoration can be achieved with or without the need for communications depending on the network and customer preferences. In either case, the switchgear is usually remotely controlled and the switchgear will automatically report the revised circuit and switchgear status to the central master station.

Schneider Electric also offers a highly sophisticated Advanced Distribution Management System, which has an embedded FDIR, Fault Detection Isolation and Restoration Algorithm. The centralised ADMS system has embedded state estimation to precisely define the network model, and process an unbalanced load flow algorithm based on that model together with telemetered real-time data recovered from the network. FDIR can operate in manual or automatic mode. In manual mode, post fault, the system will recommend the switching steps required to isolate the minimum faulted section of line and restore supplies to the healthy parts of the circuit. The system continually calculates the available capacity on each circuit and in the event that there is insufficient capacity to pick up the load lost, the scheme will transfer some load from the proposed back feed circuit to adjacent circuits. The scheme is fully dynamic and works regardless of the network running arrangement. In automatic mode the scheme utilises remotely controlled switchgear and automatically undertakes all of these isolation and supply restoration steps completely independent from the operator. This scheme is optimised to work with Schneider Electric switchgear, but works with any switchgear that uses standard telemetry protocols.

A reliable network depends on safe, flexible and maintenance-free switchgear.

Introducing Premset MV Switchgear, flexible architecture designed to improve peace of mind.

Switchgear designed for enhanced peace of mind

Because business relies on the availability of electricity, buildings need their medium voltage distribution systems not only to be reliable, but also to be energy efficient, durable, and able to adapt to changing business needs.

But the operators of these systems require more. Peace of mind is paramount and can only be achieved with low-maintenance switchgear that helps ensure the safety of both people and assets. Switchgear that enables monitoring and lowers the total cost of ownership is critical.

Stress-free installation, upgrading and maintenance

By combining proven technologies with a modular architecture and the Shielded Solid Insulation System, Premset™ MV Switchgear represents a breakthrough innovation in MV distribution. Additionally, its compact and easily upgradeable design optimises your costs through:

- maintenance-free operation
- extended life
- easy installation and upgrades
- compact size.

The three-in-one architecture means its operation is not only intuitive — it's the safest switchgear in its class. Due to an SF_6-free design, end-of-life is made easier, with no need to worry about future legislation.

High modularity with total insulation

Premset architecture is based on type-tested assemblies of functional blocks, which are designed to work together in every combination, to improve cost savings, while facilitating modifications.

Schneider Electric™

Without reliable power, a building is out of business.

Introducing Premset MV Switchgear, flexible architecture that improves peace of mind and reduces total cost of ownership.

Switchgear designed for enhanced peace of mind

Because business relies on the availability of electricity, buildings need their medium voltage distribution systems not only to be reliable, but also to be energy efficient, durable and able to adapt to changing business needs.

But the operators of these systems require more. Peace of mind is paramount and can only be achieved with low-maintenance switchgear that helps ensure the safety of both people and assets. Switchgear that provides monitoring and lowers the total cost of ownership is critical.

Stress-free installation, upgrading and maintenance

By combining proven technologies with a modular architecture and the Shielded Solid Insulation System, Premset™ MV switchgear represents a breakthrough innovation in MV distribution. Additionally, its compact and easily upgradeable design optimizes your costs through:

- maintenance-free operation
- compact size
- extended life
- easy installation and upgrades.

The three-in-one architecture means its operation is not only intuitive — it's the safest switchgear in its class. Due to an SF_6-free design, end-of-life is made easier, with no need to worry about future legislation.

Architecture with distributed intelligence

The intelligent electronic devices (IEDs) used in Premset solutions allow for easy integration, with a plug-and-play scanning system for easy configuration.

Schneider Electric™

SEAU123551

AMTED2190810NZ

Schneider Electric (NZ) Pty Ltd
38 Business Parade South
East Tamaki, Auckland 2013
PO Box 259370
Botany, Auckland 2163

Customer Care: 0800 652 999
Website: www.schneider-electric.com
Email: sales@nz.schneider-electric.com

As standards, specifications and designs change from time to time, always ask for confirmation of the information given in this publication.

This document has been printed using FSC Mix Certified paper. ISO 14001 environmental management system in use at mill.

Information given in this publication was accurate at the time of printing.