Galaxy 300 and Galaxy 300i

10-40 kVA 380/400/415 V

Technical Specifications

08/2016

www.schneider-electric.com

Legal Information

Electrical equipment should be installed, operated, serviced, and maintained only by qualified personnel. No responsibility is assumed by Schneider Electric for any consequences arising out of the use of this material.

As standards, specifications, and designs change from time to time, please ask for confirmation of the information given in this publication.

Table of Contents

Important Safety Instructions — SAVE THESE INSTRUCTIONS

Read these instructions carefully and look at the equipment to become familiar with it before trying to install, operate, service or maintain it. The following safety messages may appear throughout this manual or on the equipment to warn of potential hazards or to call attention to information that clarifies or simplifies a procedure.

The addition of this symbol to a “Danger” or “Warning” safety message indicates that an electrical hazard exists which will result in personal injury if the instructions are not followed.

This is the safety alert symbol. It is used to alert you to potential personal injury hazards. Obey all safety messages with this symbol to avoid possible injury or death.

⚠ DANGER

DANGER indicates a hazardous situation which, if not avoided, **will result in** death or serious injury.

Failure to follow these instructions will result in death or serious injury.

⚠ WARNING

WARNING indicates a hazardous situation which, if not avoided, **could result in** death or serious injury.

Failure to follow these instructions can result in death, serious injury, or equipment damage.

⚠ CAUTION

CAUTION indicates a hazardous situation which, if not avoided, **could result in** minor or moderate injury.

Failure to follow these instructions can result in injury or equipment damage.

NOTICE

NOTICE is used to address practices not related to physical injury. The safety alert symbol shall not be used with this type of safety message.

Failure to follow these instructions can result in equipment damage.

Please Note

Electrical equipment should only be installed, operated, serviced, and maintained by qualified personnel. No responsibility is assumed by Schneider Electric for any consequences arising out of the use of this material.

A qualified person is one who has skills and knowledge related to the construction, installation, and operation of electrical equipment and has received safety training to recognize and avoid the hazards involved.

Safety Precautions

⚠ DANGER

HAZARD OF ELECTRIC SHOCK, EXPLOSION OR ARC FLASH

- The product must be installed according to the specifications and requirements as defined by Schneider Electric. It concerns in particular the external and internal protections (upstream circuit breakers, battery circuit breakers, cabling, etc.) and environmental requirements. No responsibility is assumed by Schneider Electric if these requirements are not respected.
- After the UPS system has been electrically wired, do not start up the system. Start-up must only be performed by Schneider Electric.

Failure to follow these instructions will result in death or serious injury.

⚠ DANGER

HAZARD OF ELECTRIC SHOCK, EXPLOSION OR ARC FLASH

The UPS System must be installed according to local and national regulations. Install the UPS according to:

- IEC 60364 (including 60364–4–41- protection against electric shock, 60364–4–42 - protection against thermal effect, and 60364–4–43 - protection against overcurrent), **or**
- NEC NFPA 70

depending on which one of the standards apply in your local area.

Failure to follow these instructions will result in death or serious injury.

⚠ DANGER

HAZARD OF ELECTRIC SHOCK, EXPLOSION OR ARC FLASH

- Install the UPS system in a temperature controlled area free of conductive contaminants and humidity.
- Install the UPS system on a non-inflammable, level and solid surface (e.g. concrete) that can support the weight of the system.

Failure to follow these instructions will result in death or serious injury.

⚠ DANGER

HAZARD OF ELECTRIC SHOCK, EXPLOSION OR ARC FLASH

The UPS is not designed for and must therefore not be installed in the following unusual operating environments:

- Damaging fumes
- Explosive mixtures of dust or gases, corrosive gases, or conductive or radiant heat from other sources
- Moisture, abrasive dust, steam or in an excessively damp environment
- Fungus, insects, vermin
- Salt-laden air or contaminated cooling refrigerant
- Pollution degree higher than 2 according to IEC 60664-1
- Exposure to abnormal vibrations, shocks, and tilting
- Exposure to direct sunlight, heat sources, or strong electromagnetic fields

Failure to follow these instructions will result in death or serious injury.

NOTICE

RISK OF OVERHEATING

Respect the space requirements around the UPS system and do not cover the product's ventilation openings when the UPS system is in operation.

Failure to follow these instructions can result in equipment damage.

NOTICE

RISK OF EQUIPMENT DAMAGE

Do not connect the UPS output to regenerative load systems including photovoltaic systems and speed drives.

Failure to follow these instructions can result in equipment damage.

Technical Data

Model List

Start-up 5x8 is included with all UPS versions. Communication card AP9630 (network management card for remote UPS monitoring) is included with all UPS versions.

3:3 UPS Models

Galaxy 300 UPS with internal batteries	SKU number
Galaxy 300 10kVA 400V 3:3 with 10min Battery, Start-up 5x8	G3HT10KHB1S
Galaxy 300 10kVA 400V 3:3 with 30min Battery, Start-up 5x8	G3HT10KHB2S
Galaxy 300 10kVA 400V 3:3, Start-up 5x8	G3HT10KHS G3HT10KH-INS
Galaxy 300 15kVA 400V 3:3 with 10min Battery, Start-up 5x8	G3HT15KHB1S
Galaxy 300 15kVA 400V 3:3 with 30min Battery, Start-up 5x8	G3HT15KHB2S
Galaxy 300 15kVA 400V 3:3, Start-up 5x8	G3HT15KHS G3HT15KH-INS
Galaxy 300 20kVA 400V 3:3 with 10min Battery, Start-up 5x8	G3HT20KHB1S
Galaxy 300 20kVA 400V 3:3 with 25min Battery, Start-up 5x8	G3HT20KHB2S
Galaxy 300 20kVA 400V 3:3, Start-up 5x8	G3HT20KHS G3HT20KH-INS
Galaxy 300 30kVA 400V 3:3 with 10min Battery, Start-up 5x8	G3HT30KHB1S
Galaxy 300 30kVA 400V 3:3 with 25min Battery, Start-up 5x8	G3HT30KHB2S
Galaxy 300 30kVA 400V 3:3, Start-up 5x8	G3HT30KHS G3HT30KH-INS
Galaxy 300 40kVA 400V 3:3 with 10min Battery, Start-up 5x8	G3HT40KHB1S
Galaxy 300 40kVA 400V 3:3 with 20min Battery, Start-up 5x8	G3HT40KHB2S
Galaxy 300 40kVA 400V 3:3, Start-up 5x8	G3HT40KHS G3HT40KH-INS

Galaxy 300 UPS without internal batteries	SKU number
Galaxy 300 10kVA 400V 3:3 with Long Backup Charger(M), Start-up 5x8	G3HT10KHLMS
Galaxy 300 15kVA 400V 3:3 with Long Backup Charger(M), Start-up 5x8	G3HT15KHLMS
Galaxy 300 20kVA 400V 3:3 with Long Backup Charger(M), Start-up 5x8	G3HT20KHLMS
Galaxy 300 30kVA 400V 3:3 with Long Backup Charger(M), Start-up 5x8	G3HT30KHLMS
Galaxy 300 40kVA 400V 3:3 with Long Backup Charger(M), Start-up 5x8	G3HT40KHLMS

Galaxy 300i UPS with integrated transformer	SKU number
Galaxy 300i 10 kVA 400V 3:3 with Transformer, Start-up 5x8	G3HTI10KHLS
Galaxy 300i 15 kVA 400V 3:3 with Transformer, Start-up 5x8	G3HTI15KHLS
Galaxy 300i 20 kVA 400V 3:3 with Transformer, Start-up 5x8	G3HTI20KHLS
Galaxy 300i 30 kVA 400V 3:3 with Transformer, Start-up 5x8	G3HTI30KHLS
Galaxy 300i 40 kVA 400V 3:3 with Transformer, Start-up 5x8	G3HTI40KHLS

3:1 UPS Models

Galaxy 300 UPS with internal batteries	SKU number
Galaxy 300 10kVA 400V 3:1 with 10min Battery, Start-up 5x8	G3HT10K3IB1S
Galaxy 300 10kVA 400V 3:1 with 30min Battery, Start-up 5x8	G3HT10K3IB2S
Galaxy 300 10kVA 400V 3:1, Start-up 5x8	G3HT10K3IS G3HT10K3I-INS
Galaxy 300 15kVA 400V 3:1 with 10min Battery, Start-up 5x8	G3HT15K3IB1S
Galaxy 300 15kVA 400V 3:1 with 30min Battery, Start-up 5x8	G3HT15K3IB2S
Galaxy 300 15kVA 400V 3:1, Start-up 5x8	G3HT15K3IS G3HT15K3I-INS
Galaxy 300 20kVA 400V 3:1 with 10min Battery, Start-up 5x8	G3HT20K3IB1S
Galaxy 300 20kVA 400V 3:1 with 25min Battery, Start-up 5x8	G3HT20K3IB2S
Galaxy 300 20kVA 400V 3:1, Start-up 5x8	G3HT20K3IS G3HT20K3I-INS
Galaxy 300 30kVA 400V 3:1 with 10min Battery, Start-up 5x8	G3HT30K3IB1S
Galaxy 300 30kVA 400V 3:1 with 25min Battery, Start-up 5x8	G3HT30K3IB2S
Galaxy 300 30kVA 400V 3:1, Start-up 5x8	G3HT30K3IS G3HT30K3I-INS

Galaxy 300 UPS without internal batteries	SKU number
Galaxy 300 10kVA 400V 3:1 with Long Backup Charger(M), Start-up 5x8	G3HT10K3ILMS
Galaxy 300 15kVA 400V 3:1 with Long Backup Charger(M), Start-up 5x8	G3HT15K3ILMS
Galaxy 300 20kVA 400V 3:1 with Long Backup Charger(M), Start-up 5x8	G3HT20K3ILMS
Galaxy 300 30kVA 400V 3:1 with Long Backup Charger(M), Start-up 5x8	G3HT30K3ILMS

Galaxy 300i UPS with integrated transformer	SKU number
Galaxy 300i 10 kVA 400V 3:1 with Transformer, Start-up 5x8	G3HTI10K3ILS
Galaxy 300i 15 kVA 400V 3:1 with Transformer, Start-up 5x8	G3HTI15K3ILS
Galaxy 300i 20 kVA 400V 3:1 with Transformer, Start-up 5x8	G3HTI20K3ILS
Galaxy 300i 30 kVA 400V 3:1 with Transformer, Start-up 5x8	G3HTI30K3ILS

Input Power Factor

Power factor (PF) data is given for a 400 V normal AC source for linear/non-linear loads.

3:3 UPS

	25% load	50% load	75% load	100% load
10 kVA	0.45/0.62	0.80/0.83	0.88/0.91	0.95/0.96
15 kVA	0.60/0.62	0.82/0.87	0.93/0.92	0.96/0.96
20 kVA	0.79/0.70	0.92/0.91	0.98/0.98	0.98/0.98
30 kVA	0.69/0.77	0.92/0.94	0.97/0.97	0.98/0.98
40 kVA	0.92/0.89	0.99/0.98	0.99/0.99	0.99/0.99

3:1 UPS

	25% load	50% load	75% load	100% load
10 kVA	0.65/0.73	0.87/0.87	0.94/0.94	0.97/0.97
15 kVA	0.72/0.60	0.88/0.79	0.94/0.90	0.97/0.94
20 kVA	0.80/0.79	0.95/0.94	0.96/0.96	0.99/0.98
30 kVA	0.71/0.70	0.88/0.85	0.94/0.91	0.97/0.96

Efficiency

Double-Conversion Single UPS Unit

The table below provides minimum and average system efficiencies with a balanced linear load, PF of 0.8 at 400 V. The losses correspond to a double conversion single UPS unit. The losses indicated below are minimum efficiency values to be used for sizing the airconditioning system.

Galaxy 300 UPS 3:3

UPS kVA rating	25% load	50% load	75% load	100% load	Minimum value during final test 100% load	RCD 100% load
10 kVA 400 V	83.19	90.47	92.11	92.42	92.42	91.42
15 kVA 400 V	89.45	92.11	92.67	92.76	92.76	91.87
20 kVA 400 V	90.47	92.42	92.76	92.70	92.7	92.12
30 kVA 400 V	90.33	92.70	93.23	93.01	93.01	93.13
40 kVA 400 V	91.45	93.05	93.01	92.81	92.81	92.98

Galaxy 300i UPS with integrated transformer 3:3

UPS kVA rating	25% load	50% load	75% load	100% load	Minimum value during final test 100% load	RCD 100% load
10 kVA 400 V	79.86%	87.03%	88.70%	89.19%	89.19%	88.22%
15 kVA 400 V	85.87%	88.89%	89.43%	89.98%	89.98%	89.11%
20 kVA 400 V	86.85%	89.46%	89.98%	90.38%	90.38%	89.82%
30 kVA 400 V	86.72%	89.46%	89.97%	90.22%	90.22%	90.34%
40 kVA 400 V	87.79%	90.07%	90.22%	90.49%	90.49%	90.66%

Galaxy 300 UPS 3:1

UPS kVA rating	25% load	50% load	75% load	100% load	Minimum value during final test 100% load	RCD 100% load
10 kVA 400 V	83.51	89.63	91.23	91.88	91.78	91.15
15 kVA 400 V	87.16	91.13	91.97	91.99	91.95	91.8
20 kVA 400 V	89.70	92.89	93.11	92.96	92.9	92.4
30 kVA 400 V	88.8	92.10	92.70	92.75	92.55	92.4

Galaxy 300i UPS with integrated transformer 3:1

UPS kVA rating	25% load	50% load	75% load	100% load	Minimum value during final test 100% load	RCD 100% load
10 kVA 400 V	80.17%	86.49%	88.68%	89.40%	89.30%	88.69%
15 kVA 400 V	83.67%	88.04%	89.39%	89.69%	89.47%	89.51%
20 kVA 400 V	86.11%	89.64%	90.50%	90.64%	90.41%	90.09%
30 kVA 400 V	85.25%	88.88%	90.10%	90.25%	90.24%	90.09%

Batteries

Efficiency DC to AC at Normal Battery Voltage

Galaxy 300 UPS

kVA rating	10 kVA			15 kVA			20 kVA		
Voltage	**380**	**400**	**415**	**380**	**400**	**415**	**380**	**400**	**415**
Efficiency	91.3	91.3	91.3	91.9	91.9	91.9	92.1	92.1	92.1

kVA rating	30 kVA			40 kVA		
Voltage	**380**	**400**	**415**	**380**	**400**	**415**
Efficiency	90.3	90.3	90.3	90.8	90.8	90.8

Galaxy 300i UPS with Integrated Transformer

kVA rating	10 kVA			15 kVA			20 kVA		
Voltage	**380**	**400**	**415**	**380**	**400**	**415**	**380**	**400**	**415**
Efficiency	88.1	88.1	88.1	89.1	89.1	89.1	89.8	89.8	89.8

kVA rating	30 kVA			40 kVA		
Voltage	**380**	**400**	**415**	**380**	**400**	**415**
Efficiency	87.6	87.6	87.6	88.5	88.5	88.5

Battery Runtimes

NOTE: Only sealed lead-acid batteries recommended for Galaxy 300 and Galaxy 300i are validated. Galaxy 300 battery piles consist of a positive and a negative battery group.

Normal: 2x16 blocks

Minimum: 2x15 blocks

The integrated runtime with supplied batteries is offered for runtimes of 10 minutes or 30 minutes (alternately 25 or 20 minutes depending on kVA rating), with a typical service life of up to five years with standard charger. Internal batteries are installed inside the UPS and not in a battery cabinet. Galaxy 300i UPS with integrated transformer can only be used with external batteries.

The minimum battery voltage is 158 V for 16 blocks and 148 V for 15 blocks. Below this voltage, the UPS shuts down. When this minimum threshold is reached, the inverter shuts down and the load is transferred to the bypass AC input, if it is present. A low-battery warning (adjustable voltage level) activates a remote relay via the interface board.

The guaranteed backup time is defined for 0.7xPn and cos =0.8. (up to five years service life) 10% tolerance for backup time. The main battery source used for integrated batteries is Yuasa; the 2nd source qualified is CSB.

YUASA						
	Power (kVA)	**Run- times (min)**	**Type**	**AH**	**0.1C10 (A)**	**$V_{floating}$ (V)**
Internal batteries	10	10	32xNPW45-12	1x8.5	0.9	218
		30	64xNPW45-12	2x8.5	1.7	218
	15	10	32xNPW45-12	1x8.5	0.9	218
		30	90xNPW45-12	3x8.5	2.5	204
	20 (3:1)	10	64xNPW45-12	2x8.5	1.7	218
		25	90xNPW45-12	3x8.5	2.5	204
	20 (3:3)	10	64xNPW45-12	2x8.5	1.7	218
		25	90xNPW45-12	3x8.5	2.5	204
	30	10	90xNPW45-12	3x8.5	2.5	204
		25	150xNPW45-12	5x8.5	4.3	204
	40	10	90xNPW45-12	3x8.5	2.5	204
		20	150xNPW45–12	5x8.5	4.3	204
G3HTBAT1	10	113	30xSWL1100	1x40.6	4.1	204
	15	65				
	20	-				
	30	-				
	40	-				
G3HTBAT2	10	203	30xSWL1850	1x74	7.4	204
	15	212				
	20	86				
	30	55				
	40	-				
G3HTBAT3	10	267	64xSWL1100	2x40.6	8.2	218
	15	173				
	20	120				
	30	71				
	40	53				

CSB						
	Power (kVA)	**Run- times (min)**	**Type**	**AH**	**0.1C10 (A)**	**$V_{floating}$ (V)**
Internal batteries	10	10	32xGP1272	1x7.2	0.7	218
		30	64xGP1272	2x7.2	1.4	218
	15	10	32xGP12120	1x12	1.2	218
		30	90xGP1272	3x7.2	2.2	204
	20 (3:1)	10	64xGP1272	2x7.2	1.4	218
		25	64xGP12120	2x12	2.4	218
	20 (3:3)	10	64xGP1272	2x7.2	1.4	218
		25	60xGP12120	2x12	2.4	204
	30	10	90xGP1272	3x7.2	2.2	204
		25	90xGP12120	3x12	3.6	204
	40	10	64xGP12120	2x12	2.4	218
		20	90xGP12120	3x12	3.6	204
G3HTBAT1	10	113	90xGP12120	3x12	3.6	204
	15	65				
	20	-				
	30	-				
	40	-				
G3HTBAT2	10	203	64xGP12340	2x34	6.8	218
	15	212				
	20	86				
	30	55				
	40	-				
G3HTBAT3	10	267	90xGP12340	3x34	10.2	204
	15	173				
	20	120				
	30	71				
	40	53				

Battery Discharge Current

UPS rating	**10 kVA**		**15 kVA**		**20 kVA**		**30 kVA**		**40 kVA**	
Blocks	**16**	**15**	**16**	**15**	**16**	**15**	**16**	**15**	**16**	**15**
I bat @ bat nominal, 100% load	23	25	35	37	46	50	70	74	92	99
I bat @ bat min, 100% load	28	30	42	45	56	60	84	90	112	120

End of Discharge Voltage

The end of discharge voltage and shutdown depend on the discharge current shown below. For 16 x 2 blocks configurations, the shutdown voltage is 182.4 V to 158.4 V. For 15 x 2 blocks configurations, the shutdown voltage is 171 V to 148.5 V.

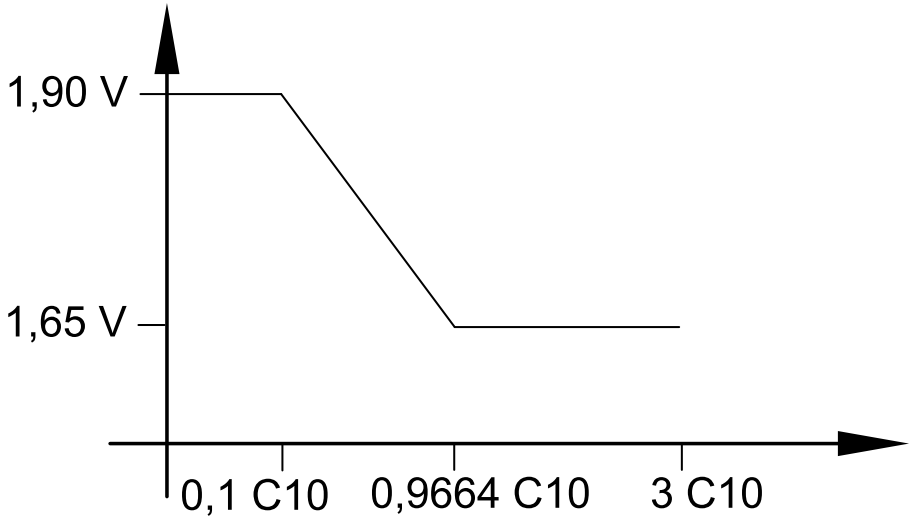

Shutdown voltage level versus the discharge rate/cell.

Battery Recharging Voltage

Battery voltage while recharging, at 25 °C ambient temperature:

- For 16 blocks configuration the floating recharging voltage is 218 V.
- For 15 blocks configuration the floating recharging voltage is 206 V.

Third Party Battery Selection Guide

This guide is a help to select the correct third party battery for a Galaxy 300 UPS including internal battery and external battery configuration.

NOTE: A Galaxy 300i UPS with integrated transformer can only use external batteries.

Battery Type

Only sealed lead-acid batteries with 12 V normal voltage are suitable.

DC Power Levels

DC Power for 3:3 UPS (kW)					
	10 kVA	**15 kVA**	**20 kVA**	**30 kVA**	**40 kVA**
25%	2.36	3.40	4.46	6.76	8.87
50%	4.43	6.60	8.79	13.16	17.43
75%	6.62	9.85	13.16	19.79	26.10
100%	8.79	13.15	17.57	26.38	34.87

DC Power for 3:1 UPS (kW)				
	10 kVA	**15 kVA**	**20 kVA**	**30 kVA**
25%	2.36	3.40	4.46	6.76
50%	4.43	6.60	8.79	13.16
75%	6.62	9.85	13.16	19.79
100%	8.79	13.15	17.57	26.38

Weight and Dimension Requirements for Internal Battery

	Max Weight per Shelf (kg)	Max Rack Width (mm)	Max Rack Depth (mm)
Narrow UPS cabinet (400 mm)	27	340	156
Wide UPS cabinet (500 mm)	42	440	202

Weight and Dimension Requirements for External Battery

⚠ DANGER

HAZARD OF ELECTRIC SHOCK, EXPLOSION, OR ARC FLASH

A circuit breaker with auxiliary contactor must be installed in the battery cabinet. Schneider Electric recommends using NSX160DC with TMDC160A 3P (Order number: LV438830).

Failure to follow these instructions will result in death or serious injury.

⚠ DANGER

HAZARD OF ELECTRIC SHOCK, EXPLOSION, OR ARC FLASH

It is mandatory to use an undervoltage Coil MN 24 V CC (Schneider Electric ref: 29410) in the circuit breaker in a battery cabinet. An undervoltage coil is supplied with the Galaxy 300 battery cabinet from Schneider Electric.

Failure to follow these instructions will result in death or serious injury.

	Schneider Electric Part Number	Max Weight per Shelf (kg)	Max Number of Batteries per Shelf
Galaxy 300 battery cabinet (1300 mm) from Schneider Electric	G3HTEFBAT	155	4
1900 mm battery cabinet — narrow version from Schneider Electric	G55TAB1	125	N/A
1900 mm battery cabinet — wide version from Schneider Electric	G55TAB2	150	N/A
Battery cabinet from other manufacturer		See specifications from manufacturer	

Communication and Management

Network Management Card

This UPS is equipped with one Smart-Slot which enables the use of one network management card (NMC). By default, the UPS is shipped with the **AP9630CH** network management card which provides network management features.

AP9630CH Default Network Management Card

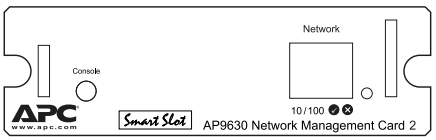

Network management features

- Browser accessible: View the user interface with a browser

- Notification: Be notified of problems to ensure that crucial situations are dealt with in a timely manner
- Data logging: Identify problematic trends before they escalate or export the data log for analysis
- Event logging: Pinpoint the timing and sequence of events leading up to an incident with the event log
- PowerChute Network Shutdown compatible: Reliable network-based shutdown of multiple servers on single or parallel UPS installation
- InfraStruXure Central compatible: An IT-ready, scalable monitoring system that collects, organizes, and distributes critical alerts, surveillance video and key information, providing a unified view of complex physical infrastructure environments from anywhere on the network

AP9635 Optional Network Management Card

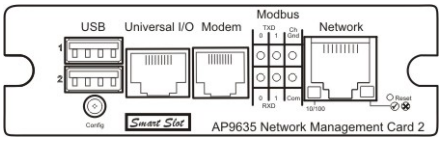

Network management features

The default network management card **AP9630CH** can be replaced with the **AP9635** network management card which gives access to additional features such as:

- Modbus RTU over RS485
- One universal input/output port, to which you can connect:
  - Temperature **AP9335T** or temperature/humidity sensors **AP9335TH**
  - Relay input/output connectors that support two input contacts and one output relay (using AP9810 Dry Contact I/O Accessory)
- Access to PowerChute, ISX Central, RMS over Ethernet, TLS over Modem, Modbus monitoring, and 4 language variations

A network management card can be replaced while the UPS configuration is up and running. The upper port connects to the computer and the lower port connects to the battery cabinet or parallel UPS unit.

Compliance

A number of documents are available from the after-sales development and technical support representative.

Directives for CE marking	The UPS system is listed according to the CE norms as applicable.
Safety	IEC 62040–1 2008 The UPS must always be installed in compliance with the requirements and standard of: • IEC 60364-4-42: Protection against thermal effects • IEC60364-4-41: Protection against electric shock • IEC 60364-4-482: Protection against fire - and all national requirements and standards in force.
Performance	IEC 62040-3 (2011) VFI-SS-111
Disturbances	IEC 62040–2 C2 & C3
EMC	IEC 62040–2 (2005) for UPS of Category C3

EMC Tests

Immunity tests

Electrostatic discharges IEC 62040-2 (2005) / IEC 61000-4-2 (1995)	
Required by standard (minimum level)	8 kV in air and 4 kV for contact
Product result (immunity level)	8 kV in air and 4 kV for contact
Radiated radio-frequency fields IEC 62040-2 (2005) / IEC 61000-4-3 (2002)	
Required by standard (minimum level)	10 V/m modulated 80% AM at 1 kHz from 80 MHz to 1 GHz
Product result (immunity level)	15 V/m modulated 80% AM at 1 kHz from 80 MHz to 1 GHz
Rapid transients in bursts IEC 62040-2 (2005) / IEC 61000-4-4 (2004)	
Required by standard (minimum level)	2 kV on AC-input cables 2 kV on DC cables 2 kV on I/O cables
Product result (immunity level)	2 kV on AC-input cables 2 kV on DC cables 2 kV on I/O cables
Surges, high energy IEC 62040-2 (2005) / IEC 61000-4-5 (1995)	
Required by standard (minimum level)	Power Input/Output: 1 kV coupling between lines Power Input/Output: 2 kV coupling between lines and earth Input/Output Dry contact: 1 kV coupling between lines Input/Output Dry contact: 1 kV coupling between lines and earth
Product result (immunity level)	Power Input/Output: 1 kV coupling between lines Power Input/Output: 2 kV coupling between lines and earth Input/Output Dry contact: 1 kV coupling between lines Input/Output Dry contact: 1 kV coupling between lines and earth
Conducted immunity IEC 62040-2 (2005) / IEC 61000-4-6 (2003)	
Required by standard (minimum level)	10V/m modulated 80% AM at 1 kHz from 150 kHz to 30 MHz
Product result (immunity level)	10V/m modulated 80% AM at 1 kHz from 150 kHz to 30 MHz
Immunity to magnetic fields at network frequency IEC 62040–2 (2005) / IEC 61000–4–8 (2001)	
Required by standard (minimum level)	30 A/m
Product result (immunity level)	30 A/m

Tests on emitted disturbances

Conducted emissions	IEC 62040-2 (2005) C3 limit. (CISPR 16-1-2: Edition 1.2 2006-08 / CISPR 22: Edition 6.0 2008-09/ IEC 62040-2: 2005)
Radiated emission	IEC 62040-2 (2005) C3 limit CISPR 16-1-2 Edition 1.2 2006-08 / CISPR 22 Edition 6.0 2008-09
Standard version	UPS category C3 (controlled distribution)

Certifications

Presentation to standardization organizations:

TÛV: CB Marketing-Safety IEC 62040–1–1 (2004)

EMC: IEC 62040–2 (2005)

CE (Marking)

CTICK (Marking)

Facility Planning

Input Specifications

3:3 and 3:1 UPS

	10 kVA			15 kVA			20 kVA		
Voltage	**380**	**400**	**415**	**380**	**400**	**415**	**380**	**400**	**415**
Connection type	3PH + N + PE								
Input frequency (Hz)	45–65								
THDI	< 9% at full load								
Nom. input current (A)[1]	13	12.5	12	20	19	18	26	25	24
Max. input current (A)[2]	15.5	15	14.5	22.5	21.5	20.5	29	28	27
Input current limitation (A)[3]	17.5	17	16	25	24	22.5	32	31	30
Input power factor correction	> 0.97 at load > 50%								
Maximum input short-circuit withstand	Icc = 10 kA								

	30 kVA			40 kVA[4]		
Voltage	**380**	**400**	**415**	**380**	**400**	**415**
Connection type	3PH + N + PE					
Input frequency (Hz)	45–65					
THDI	< 9% at full load					
Nom. input current (A)[1]	39.5	38	36	53	50	48
Max. input current (A)[2]	42	40.5	38.5	56	53	51
Input current limitation (A)[3]	47	45	42.5	61	59	56
Input power factor correction	> 0.97 at load > 50%					
Maximum input short-circuit withstand	Icc = 10 kA					

1. Input current based on rated load and batteries fully charged.
2. Input current based on full battery recharge, nominal voltage, and rated load.
3. Current limitation through electronic current limiting is based on full battery recharge and -15% input voltage.
4. Only available in 3:3 versions.

Bypass Specifications

3:3 UPS

	10 kVA			15 kVA			20 kVA		
Voltage	**380**	**400**	**415**	**380**	**400**	**415**	**380**	**400**	**415**
Connection type	3PH + N + PE								
Input frequency (Hz)	50/60 ±8%								
Nom. bypass current (A)	15	14.5	14	23	22	21	30	29	27

	30 kVA			40 kVA		
Voltage	**380**	**400**	**415**	**380**	**400**	**415**
Connection type	3PH + N + PE					
Input frequency (Hz)	50/60 ±8%					
Nom. bypass current (A)	45	43	41.5	60	58	55

3:1 UPS

	10 kVA			15 kVA		
Voltage	**220**	**230**	**240**	**220**	**230**	**240**
Connection type	1PH + N + PE					
Input frequency (Hz)	50/60 ±8%					
Nom. bypass current (A)	45	43.5	41.5	68	65	62

	20 kVA			30 kVA		
Voltage	**220**	**230**	**240**	**220**	**230**	**240**
Connection type	1PH + N + PE					
Input frequency (Hz)	50/60 ±8%					
Nom. bypass current (A)	90	87	83	136	130	125

Galaxy 300i Bypass Specifications

3:3 UPS

	10 kVA			15 kVA			20 kVA		
Voltage	**380**	**400**	**415**	**380**	**400**	**415**	**380**	**400**	**415**
Connection type	3PH + N + PE								
Input frequency (Hz)	50/60 ±8%								
Nom. bypass current for UPS with integrated transformer (A)	15.5	15	14	23	22	21	31	29.5	28

	30 kVA			40 kVA		
Voltage	**380**	**400**	**415**	**380**	**400**	**415**
Connection type	3PH + N + PE					
Input frequency (Hz)	50/60 ±8%					
Nom. bypass current for UPS with integrated transformer (A)	46	44	42.5	61.5	59	56.5

3:1 UPS

	10 kVA			15 kVA		
Voltage	**220**	**230**	**240**	**220**	**230**	**240**
Connection type	1PH + N + PE					
Input frequency (Hz)	50/60 ±8%					
Nom. bypass current for UPS with integrated transformer (A)	46	44	42.5	69.5	66.5	63.5

	20 kVA			30 kVA		
Voltage	**220**	**230**	**240**	**220**	**230**	**240**
Connection type	1PH + N + PE					
Input frequency (Hz)	50/60 ±8%					
Nom. bypass current for UPS with integrated transformer (A)	92.5	88.5	85	139	132.5	127

Output Specifications

3:3 UPS: 380, 400, 415 V (400 V 50 Hz is standard but 60 Hz is also possible). Operation at 415 V/60 Hz is not possible and does not correspond to any known needs. For all other voltages or voltage combinations, voltage-matching transformers are required.

3:1 UPS: 220, 230, 240 V (230 V is standard).

The operating voltage is set via the personalization procedures. The setting may result in an overload if the output voltage is +3% and the current is at its rated level.

NOTE: In battery operation overload is not supported.

3:3 UPS

	10 kVA			15 kVA			20 kVA			30 kVA			40 kVA		
Voltage (V)	**380**	**400**	**415**	**380**	**400**	**415**	**380**	**400**	**415**	**380**	**400**	**415**	**380**	**400**	**415**
Connection type	3PH + N + PE														
Output overload capacity	Bypass transformer: <=125% for 2 minutes <=150% for 10 seconds Output transformer: <=132% for 2 minutes <=155% for 10 seconds														
Voltage tolerance	±2%														
Output power factor	0.8														
Nom. output current (A)	15	14.5	14	23	22	21	30	29	27	45	43	41.5	60	58	55
Output frequency (Hz)(sync to mains)	50/60														
Slew rate (Hz/s)	Default: 2 Hz/s. Unitary: Can be configured as 1 Hz/s. Parallel: Keep the default setting. Standby Redundancy: Set as 1 Hz/s for backup UPS and keep the default setting for main UPS.														
THDU	< 3.0% linear loads < 5.0%. 100% unbalanced 100% non-linear loads														
Load power factor	From 0.5 leading to 0.5 lagging.														

	10 kVA			15 kVA			20 kVA			30 kVA			40 kVA		
Voltage (V)	**380**	**400**	**415**	**380**	**400**	**415**	**380**	**400**	**415**	**380**	**400**	**415**	**380**	**400**	**415**
Dynamic load response	±5%														
Output voltage regulation	±2%														

3:1 UPS

	10 kVA			15 kVA			20 kVA			30 kVA		
Voltage (V)	**220**	**230**	**240**	**220**	**230**	**240**	**220**	**230**	**240**	**220**	**230**	**240**
Connection type	1PH + N + PE											
Output overload capacity	Bypass transformer: <=125% for 2 minutes <=150% for 10 seconds Output transformer: <=132% for 2 minutes <=155% for 10 seconds											
Voltage tolerance	±2%											
Output power factor	0.8											
Nom. output current (A)	45	43	42	68	65	62	90	87	83	136	130	125
Output frequency (Hz) (sync to mains)	50/60											
Slew rate (Hz/Sec)	Default: 2 Hz/s. Unitary: Can be configured as 1 Hz/s. Parallel: Keep the default setting. Standby Redundancy: Set as 1 Hz/s for backup UPS and keep the default setting for main UPS.											
THDU	< 3.0% linear loads < 5.0%. 100% non-linear loads											
Load power factor	From 0.5 leading to 0.5 lagging.											
Dynamic load response	±5%											
Output voltage regulation	±2%											

Galaxy 300i AC Output Specifications

3:3 UPS

	10 kVA			15 kVA			20 kVA			30 kVA			40 kVA		
Voltage (V)	**380**	**400**	**415**	**380**	**400**	**415**	**380**	**400**	**415**	**380**	**400**	**415**	**380**	**400**	**415**
Connection type	3PH + N + PE														
Output overload capacity	Bypass transformer: <=125% for 2 minutes <=150% for 10 seconds														
Voltage tolerance	±2%														
Nom. output current (A)	15	14.5	14	23	22	21	30	29	27	45	43	41.5	60	58	55
Output frequency (Hz)(sync to mains)	50/60														
Slew rate (Hz/Sec)	Default: 2 Hz/s. Unitary: Can be configured as 1 Hz/s. Parallel: Keep the default setting. Standby Redundancy: Set as 1 Hz/s for backup UPS and keep the default setting for main UPS.														

	10 kVA			15 kVA			20 kVA			30 kVA			40 kVA		
Voltage (V)	**380**	**400**	**415**	**380**	**400**	**415**	**380**	**400**	**415**	**380**	**400**	**415**	**380**	**400**	**415**
THDU	< 3.0% linear loads 6.5% @ full RCD load/50Hz														
Output power factor	From 0.5 leading to 0.5 lagging.														
Dynamic load response	±5%														
Output voltage regulation	±2.5%														

3:1 UPS

	10 kVA			15 kVA			20 kVA			30 kVA		
Voltage (V)	**220**	**230**	**240**	**220**	**230**	**240**	**220**	**230**	**240**	**220**	**230**	**240**
Connection type	1PH + N + PE											
Output overload capacity	Bypass transformer: <=125% for 2 minutes <=150% for 10 seconds											
Voltage tolerance	±2.5%											
Nom. output current (A)	45	43	42	68	65	62	90	87	83	136	130	125
Output frequency (Hz) (sync to mains)	50/60											
Slew rate (Hz/Sec)	Default: 2 Hz/s. Unitary: Can be configured as 1 Hz/s. Parallel: Keep the default setting. Standby Redundancy: Set as 1 Hz/s for backup UPS and keep the default setting for main UPS.											
THDU	< 3.0% linear loads 6.5% @ full RCD load/50Hz											
Output power factor	From 0.5 leading to 0.5 lagging.											
Dynamic load response	±5%											
Output voltage regulation	±2.5%											

Battery Specifications

	10 kVA	15 kVA	20 kVA	30 kVA	40 kVA
Type	VRLA (Valve-Regulated Lead Acid) Battery				
Nom. voltage (16 blocks/15 blocks) (VDC)	± 192 / ±180				
Float voltage (16 blocks/15 blocks) (VDC)	± 218 / ±204				
End of discharge voltage (VDC) at 100% load	± 158 / ±148				
Max. charging power for UPS with standard charger (W)[5][6]	10-40 kVA: 1744 W				

5. May drop to lower values at low AC input
6. UPS with standard charger is to be used with internal batteries ONLY.

	10 kVA	15 kVA	20 kVA	30 kVA	40 kVA
Max. charging power for UPS with CLA charger (W)[7][8]	3052	3052	3052	6104	6104
Typical recharge time	Internal charger: (for integrated battery configuration) 10 hours - to 90% ±5% capacity after full discharge at min. Config. CLA: (for external battery configuration) 24 hours - to 90% ±5% capacity after full discharge at min. Config.				
Nom. voltage (V)	12 V/block				
End voltage (V)	9.9 V/block (varies from 11.4 V to 9.9 V corresponding to load percentage from low to high)				
I_{Nom} discharge[9] (A) (15 blocks)	25	37	50	74	99
I_{Max} discharge[10] (A) (15 blocks)	30	45	60	90	120

Recommended Cable Sizes

All wiring must comply with all applicable national and/or electrical codes. The below specifications are recommendations only.

AC cable sizes are determined for:

- the TNS system for copper, single-core cables, type U1000 R02V
- 100 m long with a line voltage drop <3%
- installed on perforated cable trays, XLPE-type insulation, single-layer trefoil formation
- THDI between 15% and 33%, 35° C at 400 V, grouped in four touching cables

Battery cable sizes are determined for:

- copper, single-core cables, type U1000 R02V
- maximum length 25 m with a line voltage drop <1%

3:3 UPS

3:3 UPS – Single mains	10 kVA		15 kVA		20 kVA		30 kVA		40 kVA	
	min	max	min	max	min	max	min	max	min	max
Input (mm²)	10	35	10	35	10	35	16	35	25	35
Output (mm²)	10	35	10	35	10	35	16	35	25	35
Battery input (mm²) 70° C	10	35	10	35	16	35	25	35	35	35

3:3 UPS – Dual mains	10 kVA		15 kVA		20 kVA		30 kVA		40 kVA	
	min	max	min	max	min	max	min	max	min	max
Input (mm²)	10	35	10	35	10	35	16	35	25	35
Output (mm²)	10	35	10	35	10	35	16	35	25	35
Battery input (mm²) 70° C	10	35	10	35	16	35	25	35	35	35
Bypass (mm²)	10	35	10	35	10	35	16	35	25	35

7. May drop to lower values at low AC input
8. UPS with CLA charger is to be used with external batteries ONLY.
9. Nominal battery discharge current based on rated load and nominal battery voltage.
10. Maximum battery discharge current based on rated load at the end of the discharge.

3:1 UPS

3:1 UPS – Single mains	10 kVA		15 kVA		20 kVA		30 kVA	
	min	max	min	max	min	max	min	max
Input (mm^2)	16	35	25	35	35	90	70	90
Output (mm^2)	16	35	25	35	35	90	70	90
Battery input (mm^2) 70° C	10	35	10	35	16	35	25	35

3:1 UPS – Dual mains	10 kVA		15 kVA		20 kVA		30 kVA	
	min	max	min	max	min	max	min	max
Input (mm^2)	10	35	10	35	35	90	35	90
Output (mm^2)	16	35	25	35	35	90	70	90
Battery input (mm^2) 70° C	10	35	10	35	16	35	25	35
Bypass (mm^2)	16	35	25	35	35	90	70	90

Torque Specifications

Bolt size	Torque
M3	1 Nm
M4	1.2 Nm – 2 Nm
M5	3.5 Nm – 4.5 Nm
M6	4.5 Nm – 6 Nm
For batteries: Use the torque recommended by Schneider Electric or by the third party battery vendor.	

Fuses and Breakers

Single Mains System

The generator capacity must be bigger than the UPS capacity. A 30% margin is minimum. A 50% margin is advisable. Example of an illustration:

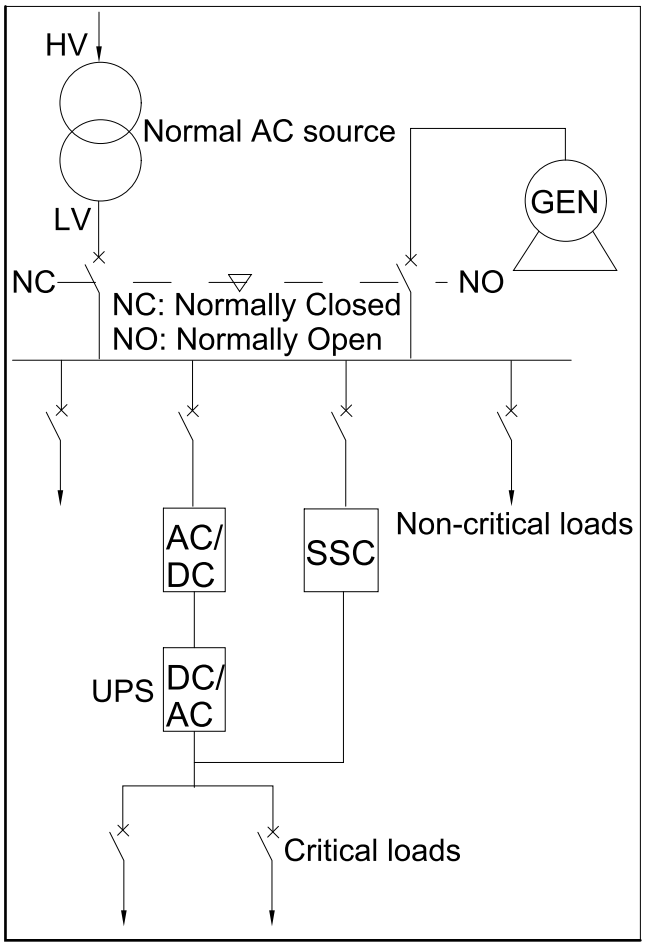

Battery Protection Fuses

Fuses for battery input is 100 A/690 V on an SCR board (INSM).

Internal Battery Breaker

UPS	Internal battery breaker
3:3: 20 kVA, 15 kVA, 10 kVA and 3:1: 20 kVA, 15 kVA, 10 kVA	C65H, 63A, 3P
3:3: 40 kVA, 30 kVA and 3:1: 30 kVA	INT125, 125 A, 3P

External Battery Breaker

With an insulating monitoring device as standard.

LV438830, NSX160DC 160 A 3P, Schneider Electric

Undervoltage Coil MN 24V CC (Schneider Electric ref: 29410)

Fuse and Breaker Sizes

Breakers

Galaxy 300 UPS									
	3:3					**3:1**			
kVA	10	15	20	30	40	10	15	20	30
Mains input	C65H-C-4P-50A/ C60H-C-4P-50A			INT 125–4P-80A		C65H-C-4P-50A/ C60H-C-4P-50A		C65H-C-4P-50A/ C60H-C-4P-50A	INT 125–4P-80A
Bypass input	C65H-D-3P-50A/ C60H-D-3P-50A			INT 125–3P-80A		INT 125–1P-100A		INT 125–2P-100A	
Battery	NA								
AC output	The selection of a circuit breaker type (N;H or L) depends on the short-circuit power of the installation. The short circuit current of the installation must be less than the maximum current of the downstream circuit breaker.								
Appropriate disconnect devices must be provided external to the equipment.									

Galaxy 300i with integrated transformer — single mains — upstream				
	3:1			
kVA	10	15	20	30
Mains input	C120H-D-4P-80A	C120H-D-4P-125A	NSX250F TM200D	NSX250F TM250D 4P
Bypass input	INT 125–1P-100A		INT 125–2P-100A	
Battery	NA			
AC output	The selection of a circuit breaker type (N;H or L) depends on the short-circuit power of the installation. The short circuit current of the installation must be less than the maximum current of the downstream circuit breaker.			
Appropriate disconnect devices must be provided external to the equipment.				

Galaxy 300i with integrated transformer — dual mains — upstream				
	3:1			
kVA	10	15	20	30
Mains input	C65H-D-4P-50A/ C60H-D-4P-50A	C65H-D-4P-50A/ C60H-D-4P-50A	C65H-D-4P-50A/ C60H-D-4P-50A	C120H-D-4P-80A
Bypass input	C120H-D-2P-80A	C120H-D-2P-125A	NSX250F TM200D 3P	NSX250F TM250D
Battery	NA			
AC output	The selection of a circuit breaker type (N;H or L) depends on the short-circuit power of the installation. The short circuit current of the installation must be less than the maximum current of the downstream circuit breaker.			
Appropriate disconnect devices must be provided external to the equipment.				

Galaxy 300i with integrated transformer — downstream				
	3:1			
kVA	10	15	20	30
Downstream CB	C65N-B-2P-25A/ C60N-B-2P-25A C65N-C-2P-10A/ C60N-C-2P-10A		C65N-B-2P-32A/ C60N-B-2P-32A C65N-C-2P-16A/ C60N-C-2P-16A	C65N-B-2P-50A/ C60N-B-2P-50A C65N-C-2P-25A/ C60N-C-2P-25A
Battery	NA			
AC output	The selection of a circuit breaker type (N;H or L) depends on the short-circuit power of the installation. The short circuit current of the installation must be less than the maximum current of the downstream circuit breaker.			
Appropriate disconnect devices must be provided external to the equipment.				

Fuses

Fuses	Description	Fuse location
AC input fuse	Fast fuse 63 A/690 V	INSM
Battery fuse	Fast fuse 100 A/690 V	INSM
CLA	Fast fuse 25 A/600 V	CLAM
Charger fuse	Fast fuse 6 A/660 V	CHGM
AC fan fuse	Fuse 2 A/250 V	OTFM, OTSM
DC fan fuse	Fuse 2 A/250 V	PFCM, IPTM, IPSM
PS fuse	Fast fuse 3.15 A/500 V	APSM
SELV fuse	Fuse 4 A/250 V	DSPM
Second PS fuse	Fuse 2 A/500 V	POPM

Weights and Dimensions

Galaxy 300 UPS with Internal Batteries

	Height (mm)	Width (mm)	Depth (mm)	Weight without batteries (kg)	Max. weight with batteries (kg)[11]
3:3					
10–20 kVA	1300	400	950	135	380
30–40 kVA	1300	500	950	205	615
3:1					
10–15 kVA	1300	400	950	150	395
20 kVA	1300	500	950	190	440
30 kVA	1300	500	950	205	620

Galaxy 300 UPS without Internal Batteries

	Height (mm)	Width (mm)	Depth (mm)	Weight (kg)
3:3				
10–20 kVA	670	400	950	125
30–40 kVA	670	500	950	164
3:1				
10–15 kVA	670	400	950	135
20 kVA	670	500	950	144
30 kVA	670	500	950	170

Galaxy 300i UPS with Integrated Transformer

	Height (mm)	Width (mm)	Depth (mm)	Weight (kg)
3:3				
10–20 kVA	1300	400	950	329
30–40 kVA	1300	500	950	436
3:1				
10–15 kVA	1300	400	950	252
20 kVA	1300	500	950	300
30 kVA	1300	500	950	348

11. Actual weight depends on number of batteries and battery type

Battery Cabinets

	Height (mm)	Width (mm)	Depth (mm)	Weight without batteries (kg)	Max. weight with batt. (kg)[12]
Galaxy 300 battery cabinet (1300 mm)	1300	660	850	105	610
1900 mm battery cabinet – narrow	1900	712	850	125	N/A
1900 mm battery cabinet – wide	1900	1012	850	150	N/A

Batteries

	Height (mm)	Width (mm)	Depth (mm)	Weight (kg)
For installation in the Galaxy 300 UPS Cabinet				
910–8013–006	100	65	151	2.55
910–0631	100	98	151	3.84
910–1209–004	98	65	151	2.7
For installation in the Galaxy 300 Battery Cabinets				
910–0631[13]	100	98	151	3.84
910–0633	178	130	196	11.33
910–1209–004[13]	98	65	151	2.7
910–0001	170	165	197	14.5
910–0632	174	166	350	23.8

Environmental

Operating temperature	0 to 35° C[14] Battery operating temperature is optimal between 20 and 25° C
Storage temperature with batteries	-10 to 40° C
Storage temperature without batteries	-10 to 60 °C
Operating relative humidity	0 - 90%, non-condensing ambient temperature
Storage relative humidity	0 - 90%
Operating elevation	1000 m.: 100% load 1500 m.: 97.5% load 2000 m.: 95.0% load 2500 m.: 92.5% load 3000 m.: 90.0% load
Storage elevation	0–10000 m
Operating room	Technical restricted access rooms
Ventilation (required airflow)	600 m^3/h for the 3:3: 10 kVA, 15 kVA, 20 kVA, and 3:1: 15 kVA and 10 kVA 966 m^3/h for the 3:3: 40 kVA, and 3:1: 30 kVA 726 m^3/h for the 3:1: 20 kVA Floor-to-ceiling ventilation: 1800 mm
Dust filter	Yes
Clearance	Rear clearance: UPS and battery cabinet: 500 mm Front clearance: UPS: 940 mm. Battery cabinet: 800 mm
Audible noise	**3:3** 10 – 20 kVA: 55 dB 30 – 40 kVA: 56 dB

12. Actual weight depends on number of batteries and battery type
13. This battery is only suitable for the Galaxy 300 battery cabinet (1300 mm)
14. Up to 40° C with 12.5% load derating

	3:1 10 – 15 kVA: 55 dB 20 – 30 kVA. 56 dB
Input protection	Fuse protection
Color	Grey Housing: RAL 9023 Display panel: 9022

Galaxy 300 Heat Dissipation

3:3 UPS

Heat dissipation[15]	**10 kVA**			**15 kVA**			**20 kVA**		
Load (%)	100	75	50	100	75	50	100	75	50
Heat dissipation (Watt)	656	514	420	937	712	514	1260	937	656

Heat dissipation[15]	**30 kVA**			**40 kVA**		
Load (%)	100	75	50	100	75	50
Heat dissipation (Watt)	1804	1313	945	2479	1804	1195

3:1 UPS

Heat dissipation[15]	**10 kVA**			**15 kVA**		
Load (%)	100	75	50	100	75	50
Heat dissipation (Watt)	707	577	463	1045	786	577

Heat dissipation[15]	**20 kVA**			**30 kVA**		
Load (%)	100	75	50	100	75	50
Heat dissipation (Watt)	1212	888	612	1876	1417	1029

Galaxy 300i Heat Dissipation

3:3 UPS

Heat dissipation[15]	**10 kVA**			**15 kVA**			**20 kVA**		
Load (%)	100	75	50	100	75	50	100	75	50
Heat dissipation (Watt)	970	764	596	1336	1064	750	1702	1336	942

Heat dissipation[15]	**30 kVA**			**40 kVA**		
Load (%)	100	75	50	100	75	50
Heat dissipation (Watt)	2601	2007	1414	3363	2601	1763

3:1 UPS

Heat dissipation[15]	**10 kVA**			**15 kVA**			**20 kVA**			**30 kVA**		
Load (%)	100	75	50	100	75	50	100	75	50	100	75	50
Heat dissipation (Watt)	948	766	624	1379	1067	815	1653	1259	924	2594	1977	1501

15. Batteries fully charged.

Settings

Default Settings

Setting	Default	Available settings
LCD CONTRAST	0	-4 to 4
WIZARD	**ENABLE**	**DISABLE**
DATE FORMAT	**DD/MM/YYYY**	**YYYY/MM/DD**, **MM/DD/YYYY**
DATE&TIME	**01/01/2010 00:00:00**	The range of year is from 2010 to 2035
TEMPERATURE	**CELSIUS**	**FAHRENHEIT**
LANGUAGE	**ENGLISH**	18 available languages (see table below)
BUZZER	**ENABLE**	**DISABLE**
DUST FILTER LEVEL	**OFF**	**3 MONTHS**, **4 MONTHS**, **5 MONTHS**, **12 MONTHS**
UPS OPERATION MODE[16]	**NORMAL MODE**	**PARALLEL MODE**, **FREQUENCY CONVERTER MODE**
OUTPUT VOLTAGE[16]	230 V	220 V, 240 V
UPS OUTPUT FREQUENCY[16]	50 Hz	60 Hz
UPS AUTOMATIC START[16]	**DISABLE**	**ENABLE**
TRANSFER TO BYPASS[16]	**ENABLE**	**DISABLE**
TRANSFER TO BYPASS IF BYPASS NOT OK[16]	**ENABLE**	**DISABLE**
ECO MODE	**OFF**	**ENABLE**
MANAGEMENT BYPASS STATIC SWITCH FOR EPO[17]	**DISABLE**	**ENABLE**
SET PASSWORD	**000**	
BATTERY TEST	**ENABLE**	**DISABLE**
BATTERY TEST INTERVAL	**1 MONTH**	X **MONTHS** (1–6)

Languages supported by the display	
FRENCH	**RUSSIAN**
ENGLISH	**POLISH**
GERMAN	**GREEK**
ITALIAN	**TURKISH**
SPANISH	**INDONESIAN**
PORTUGUESE	**CHINESE SIMPLIFIED**
DUTCH	**THAI**
SWEDISH	**KOREAN**
FINNISH	**NORWEGIAN**

16. These settings require a restart.
17. This setting can only be changed by Schneider Electric. This setting requires a restart.

Drawings

NOTE: A comprehensive set of drawings is available on the engineering website at engineer.apc.com.

NOTE: These drawings are for reference ONLY — subject to change without notice.

Galaxy 300 3:3 10–20 kVA with Internal Batteries

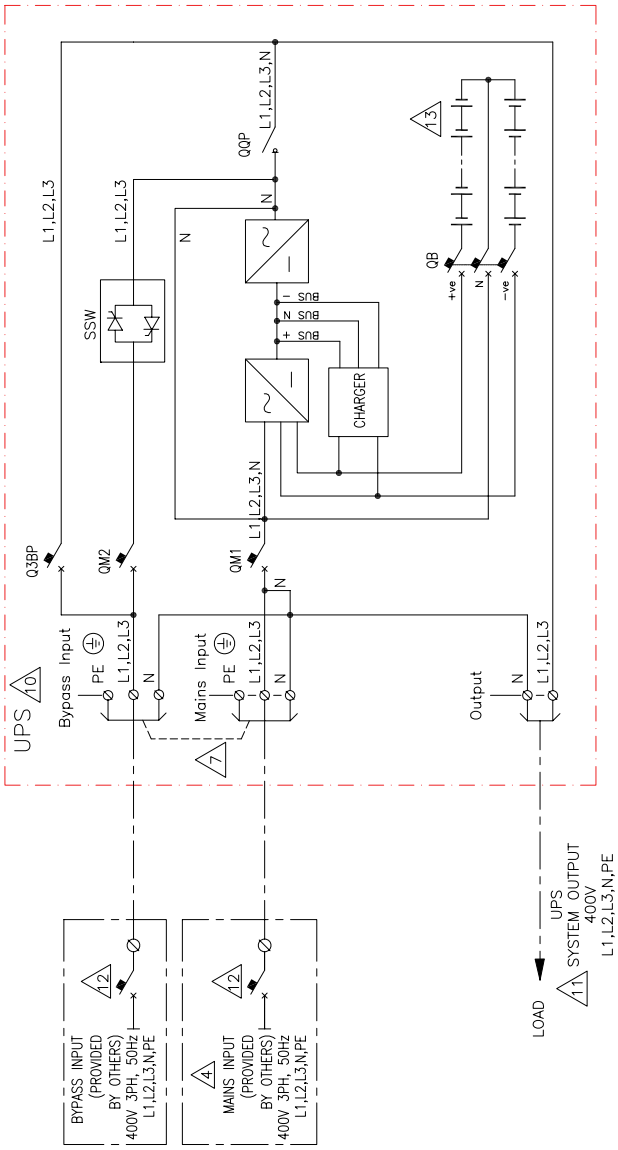

Runtime Details

SKU Number/ (Runtime in Minutes)	Type and quantity of battery: YUASA	Type and quantity of battery: CSB
G3HT10KHB1S (10 min)	NPW45-12 (32 blocks)	GP1272 (32 blocks)
G3HT10KHB2S (30 min)	NPW45-12 (64 blocks)	GP1272 (64 blocks)
G3HT15KHB1S (10 min)	NPW45-12 (32 blocks)	GP12120 (32 blocks)
G3HT15KHB2S ((30 min)	NPW45-12 (90 blocks)	GP1272 (90 blocks)
G3HT20KHB1S (10 min)	NPW45-12 (64 blocks)	GP1272 (64 blocks)
G3HT20KHB2S ((25 min)	NPW45-12 (90 blocks)	GP12120 (60 blocks)

DEVICE RATINGS (SCHNEIDER ELECTRIC MAKE)

DEVICE ID AND QUANTITY IN EACH SKU									RATING (A)	DESCRIPTION	MODEL/ TYPE	NUMBER OF AUX. SWITCH (NC)
G3HT10KHB1S	G3HT10KHB2S	G3HT10KHS	G3HT15KHB1S	G3HT15KHB2S	G3HT15KHS	G3HT20KHB1S	G3HT20KHB2S	G3HT20KHS				
1(QOP)	1(QOP)	1(QOP)	1(QOP)	1(QOP)	1(QOP)	1(QOP)	1(QOP)	1(QOP)	63	AC SWITCH 4 POLE	APA15016	1
1(QB)	1(QB)	1(QB)	1(QB)	1(QB)	1(QB)	1(QB)	1(QB)	1(QB)	63	AC MINIATURE CIRCUIT BREAKER 3 POLE	OSMC65H3C63 + 26924	1
1(QM1)	1(QM1)	1(QM1)	1(QM1)	1(QM1)	1(QM1)	1(QM1)	1(QM1)	1(QM1)	50	AC MINIATURE CIRCUIT BREAKER 4 POLE	OSMC65H4C50	0
2 (QM2) (Q3BP)	2 (QM2) (Q3BP)	2 (QM2) (Q3BP)	2 (QM2) (Q3BP)	2 (QM2) (Q3BP)	2 (QM2) (Q3BP)	2 (QM2) (Q3BP)	2 (QM2) (Q3BP)	2 (QM2) (Q3BP)	50	AC MINIATURE CIRCUIT BREAKER 3 POLE	OSMC65H3D50	1

LEGEND:
— — — — AC CABLE – PROVIDED BY OTHERS.

NOTES:
1. INSTALLATION MUST COMPLY WITH ALL APPLICABLE LOCAL AND NATIONAL CODES.
2. PLEASE REFER TO APC by Schneider Electric PRODUCT MANUALS FOR DETAILS.
3. DRAWING DEPICTS POWER SYSTEM CONNECTIONS AND IS NOT REPRESENTATIVE OF PHYSICAL LAYOUT. PLEASE REFER TO MECHANICAL DRAWINGS FOR PHYSICAL LAYOUT.
Δ4. 3x400/230V TN–S (PROVIDED BY OTHERS). FOR OTHER EARTHING PRINCIPLES, PLEASE CONTACT APC by Schneider Electric. RECOMMENDED UPSTREAM PROTECTION IS A MINIMUM RATING TO SUPPORT MAXIMUM CURRENT, WITHOUT SELECTIVITY. IF SELECTIVITY IS REQUIRED, PLEASE CONTACT APC by Schneider Electric.
5. ALL AC POWER CABLING IS L1, L2, L3, N, PE.
6. DC CABLING TO BE 600V RATED, 3 WIRE.
Δ7. JUMPERS ARE APPLICABLE FOR SINGLE MAINS, MUST BE REMOVED FOR DUAL MAINS.
8. UPS INPUT AND OUTPUT CABLES SHOULD BE SEGREGATED.
9. POWER WIRING AND CONTROL WIRING SHOULD BE SEGREGATED.
Δ10. APPLICABLE UPS SKU NUMBERS LISTED IN SHEET–3.
Δ11. SYSTEM OUTPUT FOR VARIOUS SKUs LISTED IN SHEET–3.
Δ12. FOR SYSTEM INPUT OVER CURRENT PROTECTION REFER TO SHEET–3.
Δ13. SKUs G3HT10KHS, G3HT15KHS AND G3HT20KHS HAVE NO BATTERIES.
14. FOR RECOMMENDED CABLE SIZES, REFER TO SHEET–3.

Schneider Electric

TITLE: GALAXY 300 Input: 400/230V AC 3PH DUAL MAINS Output: 10/15/20 kVA 400V 3PH 1 MODULE CAPACITY SYSTEM ONE LINE DIAGRAM

DWG NO: G3HT10K20HC1M2–SD REV. 1

DRAWN:	BALAMURUGAN	20–APR–11	ANGLE
ENGINEER:	KJWU	28–APR–11	PROJECTION
APPROVED:	CLARSEN/SJWGH	28–APR–11	N/A

PROJECT: SUBMITTAL DRAWINGS SHEET 1 OF 3

Galaxy 300 3:3 30–40 kVA with Internal Batteries

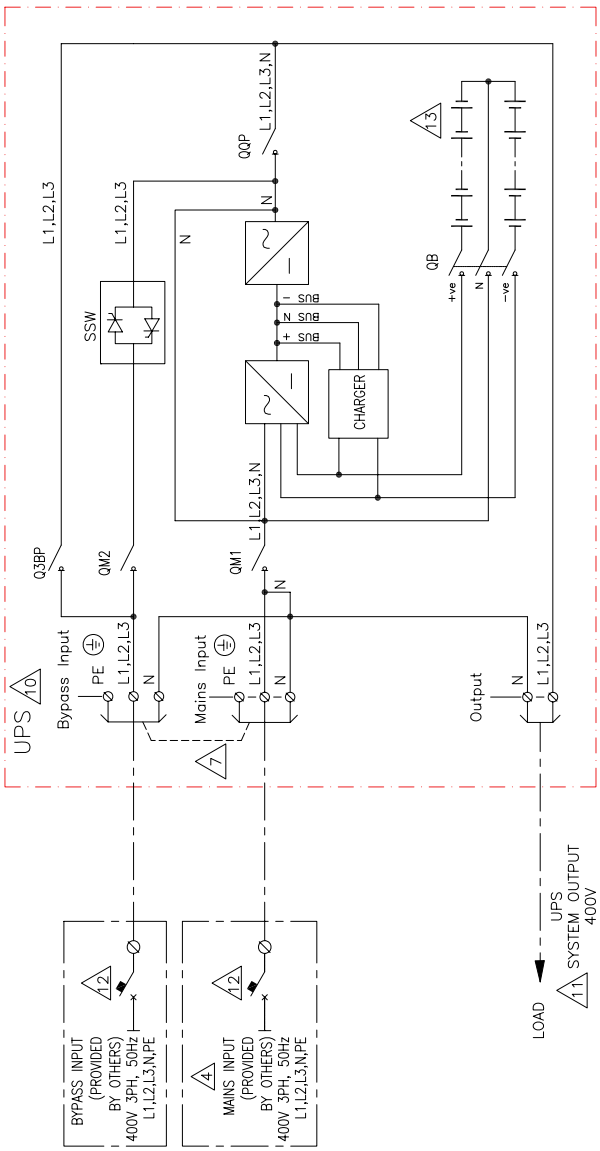

Runtime Details

SKU Number/ (Runtime in Minutes)	Type and quantity of battery	
	YUASA	CSB
G3HT30KHB1S (10 min)	NPW45-12 (90 blocks)	GP1272 (90 blocks)
G3HT30KHB2S ((25 min)	NPW45-12 (150 blocks)	GP12120 (90 blocks)
G3HT40KHB1S (10 min)	NPW45-12 (90 blocks)	GP12120 (64 blocks)
G3HT40KHB2S ((20 min)	NPW45-12 (150 blocks)	GP12120 (90 blocks)

DEVICE RATINGS (SCHNEIDER ELECTRIC MAKE)

DEVICE ID AND QUANTITY IN EACH SKU						RATING (A)	DESCRIPTION	MODEL/ TYPE	NUMBER OF AUX. SWITCH (NC)
G3HT30KHB1S	G3HT30KHB2S	G3HT30KHS	G3HT40KHB1S	G3HT40KHB2S	G3HT40KHS				
1(QB)	1(QB)	1(QB)	1(QB)	1(QB)	1(QB)	125	AC SWITCH 3 POLE	APA15059	1
1(QOP)	1(QOP)	1(QOP)	1(QOP)	1(QOP)	1(QOP)	125	AC SWITCH 4 POLE	APA15060	1
1(QM1)	1(QM1)	1(QM1)	1(QM1)	1(QM1)	1(QM1)	80	AC SWITCH 4 POLE	APA15022	0
2 (QM2) (Q3BP)	2 (QM2) (Q3BP)	2 (QM2) (Q3BP)	2 (QM2) (Q3BP)	2 (QM2) (Q3BP)	2 (QM2) (Q3BP)	80	AC SWITCH 3 POLE	APA15021	1

LEGEND:
—— - —— - —— AC CABLE – PROVIDED BY OTHERS.

NOTES:
1. INSTALLATION MUST COMPLY WITH ALL APPLICABLE LOCAL AND NATIONAL CODES.
2. PLEASE REFER TO APC by Schneider Electric PRODUCT MANUALS FOR DETAILS.
3. DRAWING DEPICTS POWER SYSTEM CONNECTIONS AND IS NOT REPRESENTATIVE OF PHYSICAL LAYOUT. PLEASE REFER TO MECHANICAL DRAWINGS FOR PHYSICAL LAYOUT.
Δ 4. 3x400/230V TN–S (PROVIDED BY OTHERS). FOR OTHER EARTHING PRINCIPLES, PLEASE CONTACT APC by Schneider Electric. RECOMMENDED UPSTREAM PROTECTION IS A MINIMUM RATING TO SUPPORT MAXIMUM CURRENT, WITHOUT SELECTIVITY. IF SELECTIVITY IS REQUIRED, PLEASE CONTACT APC by Schneider Electric.
5. ALL AC POWER CABLING IS L1, L2, L3, N, PE.
6. DC CABLING TO BE 600V RATED, 3 WIRE.
Δ 7. JUMPERS ARE APPLICABLE FOR SINGLE MAINS, MUST BE REMOVED FOR DUAL MAINS.
8. UPS INPUT AND OUTPUT CABLES SHOULD BE SEGREGATED.
9. POWER WIRING AND CONTROL WIRING SHOULD BE SEGREGATED.
Δ10. APPLICABLE UPS SKU NUMBERS LISTED IN SHEET–3.
Δ11. SYSTEM OUTPUT FOR VARIOUS SKUs LISTED IN SHEET–3.
Δ12. FOR SYSTEM INPUT OVER CURRENT PROTECTION REFER TO SHEET–3.
Δ13. SKUs G3HT30KHS AND G3HT40KHS HAVE NO BATTERIES.
14. FOR RECOMMENDED CABLE SIZES, REFER TO SHEET–3.

Schneider Electric

TITLE: Input: 400/230V AC 3PH, DUAL MAINS Output: 30/40kVA 400V 3PH 1 MODULE CAPACITY SYSTEM ONE LINE DIAGRAM
GALAXY 300

DWG NO: G3HT30K40HC1M2–SD REV: 1
DRAWN: BALAMURUGAN 20–APR–11
ENGINEER: KJWU 28–APR–11
APPROVED: CLARSEN/SJWAGH 28–APR–11
ANGLE PROJECTION: N/A
PROJECT: SUBMITTAL DRAWINGS SHEET 2 OF 3

Galaxy 300i 3:3 10–20 kVA Dual Mains with Isolation Transformer

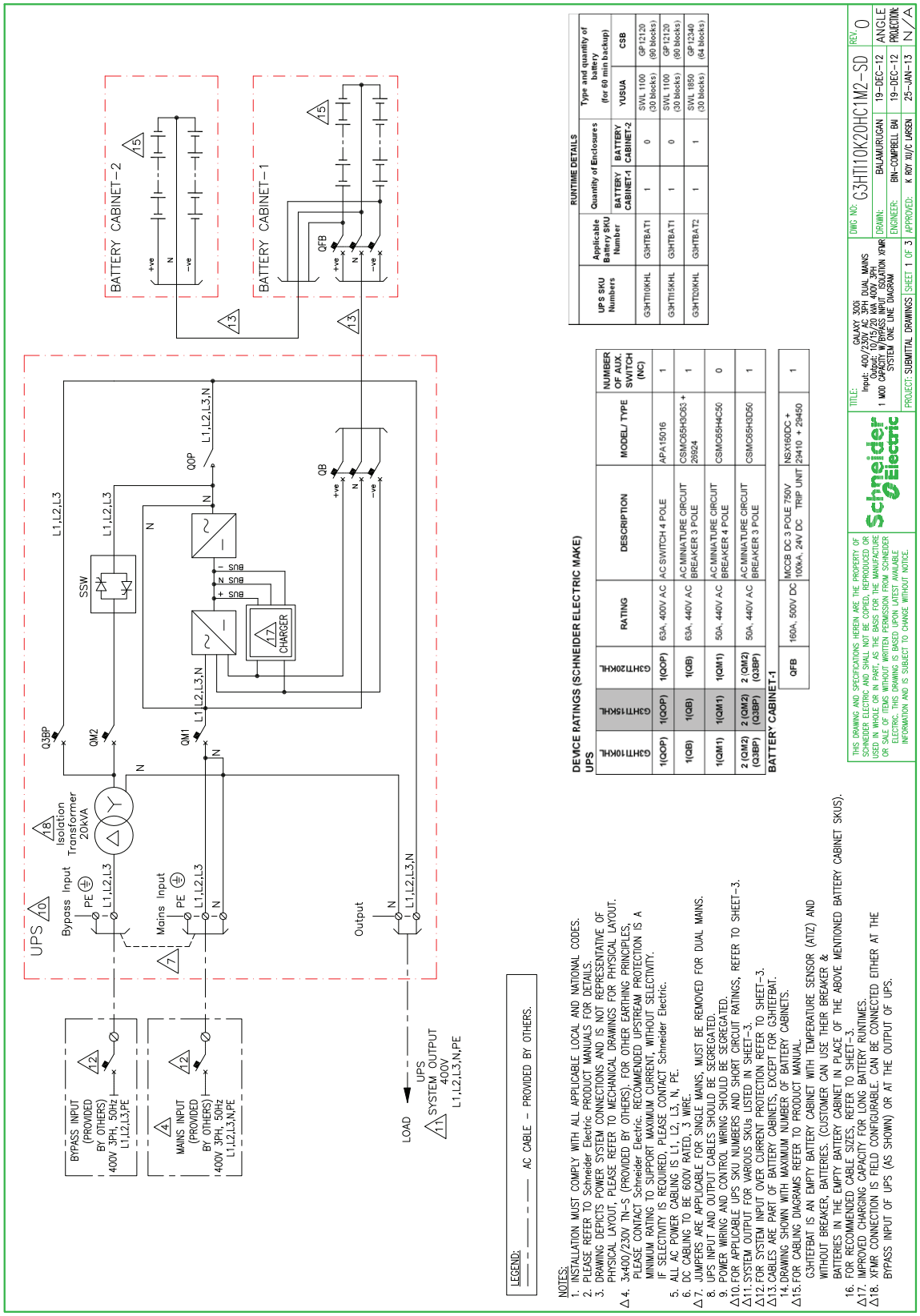

NOTES:
1. INSTALLATION MUST COMPLY WITH ALL APPLICABLE LOCAL AND NATIONAL CODES.
2. PLEASE REFER TO Schneider Electric PRODUCT MANUALS FOR DETAILS.
3. DRAWING DEPICTS POWER SYSTEM CONNECTIONS AND IS NOT REPRESENTATIVE OF PHYSICAL LAYOUT, PLEASE REFER TO MECHANICAL DRAWINGS FOR PHYSICAL LAYOUT.
△4. 3x400/230V TN-S (PROVIDED BY OTHERS). FOR OTHER EARTHING PRINCIPLES, PLEASE CONTACT Schneider Electric. RECOMMENDED UPSTREAM PROTECTION IS A MINIMUM RATING TO SUPPORT MAXIMUM CURRENT, WITHOUT SELECTIVITY. IF SELECTIVITY IS REQUIRED, PLEASE CONTACT Schneider Electric.
5. ALL AC POWER CABLING IS L1, L2, L3, N, PE.
6. DC CABLING TO BE 600V RATED, 3 WIRE.
△7. JUMPERS ARE APPLICABLE FOR SINGLE MAINS, MUST BE REMOVED FOR DUAL MAINS.
8. UPS INPUT AND OUTPUT CABLES SHOULD BE SEGREGATED.
9. POWER WIRING AND CONTROL WIRING SHOULD BE SEGREGATED.
△10. FOR APPLICABLE UPS SKU NUMBERS AND SHORT CIRCUIT RATINGS, REFER TO SHEET-3.
△11. SYSTEM OUTPUT FOR VARIOUS SKUs LISTED IN SHEET-3.
△12. FOR SYSTEM INPUT OVER CURRENT PROTECTION REFER TO SHEET-3.
△13. CABLES ARE PART OF BATTERY CABINETS, EXCEPT FOR G3HTEFBAT.
14. DRAWING SHOWN WITH MAXIMUM NUMBER OF BATTERY CABINETS.
△15. FOR CABLING DIAGRAMS REFER TO PRODUCT MANUAL.
G3HTEFBAT IS AN EMPTY BATTERY CABINET WITH TEMPERATURE SENSOR (ATIZ) AND WITHOUT BREAKER, BATTERIES. (CUSTOMER CAN USE THEIR BREAKER & BATTERIES IN THE EMPTY BATTERY CABINET IN PLACE OF THE ABOVE MENTIONED BATTERY CABINET SKUS).
16. FOR RECOMMENDED CABLE SIZES, REFER TO SHEET-3.
△17. IMPROVED CHARGING CAPACITY FOR LONG BATTERY RUNTIMES.
△18. XFMR CONNECTION IS FIELD CONFIGURABLE. CAN BE CONNECTED EITHER AT THE BYPASS INPUT OF UPS (AS SHOWN) OR AT THE OUTPUT OF UPS.

Galaxy 300i 3:3 30–40 kVA Dual Mains with Isolation Transformer

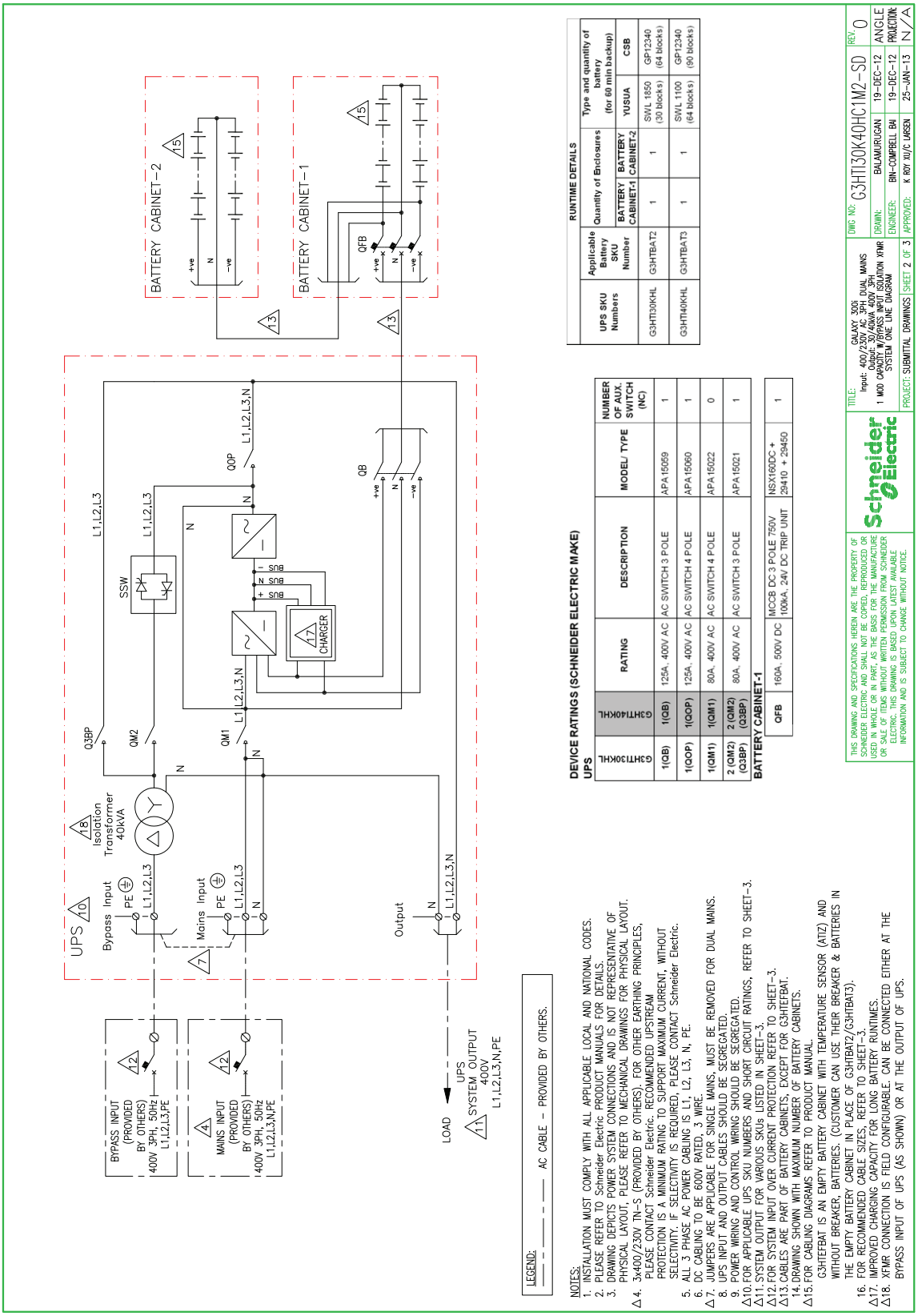

Galaxy 300i 3:3 10–20 kVA Single Mains with Isolation Transformer

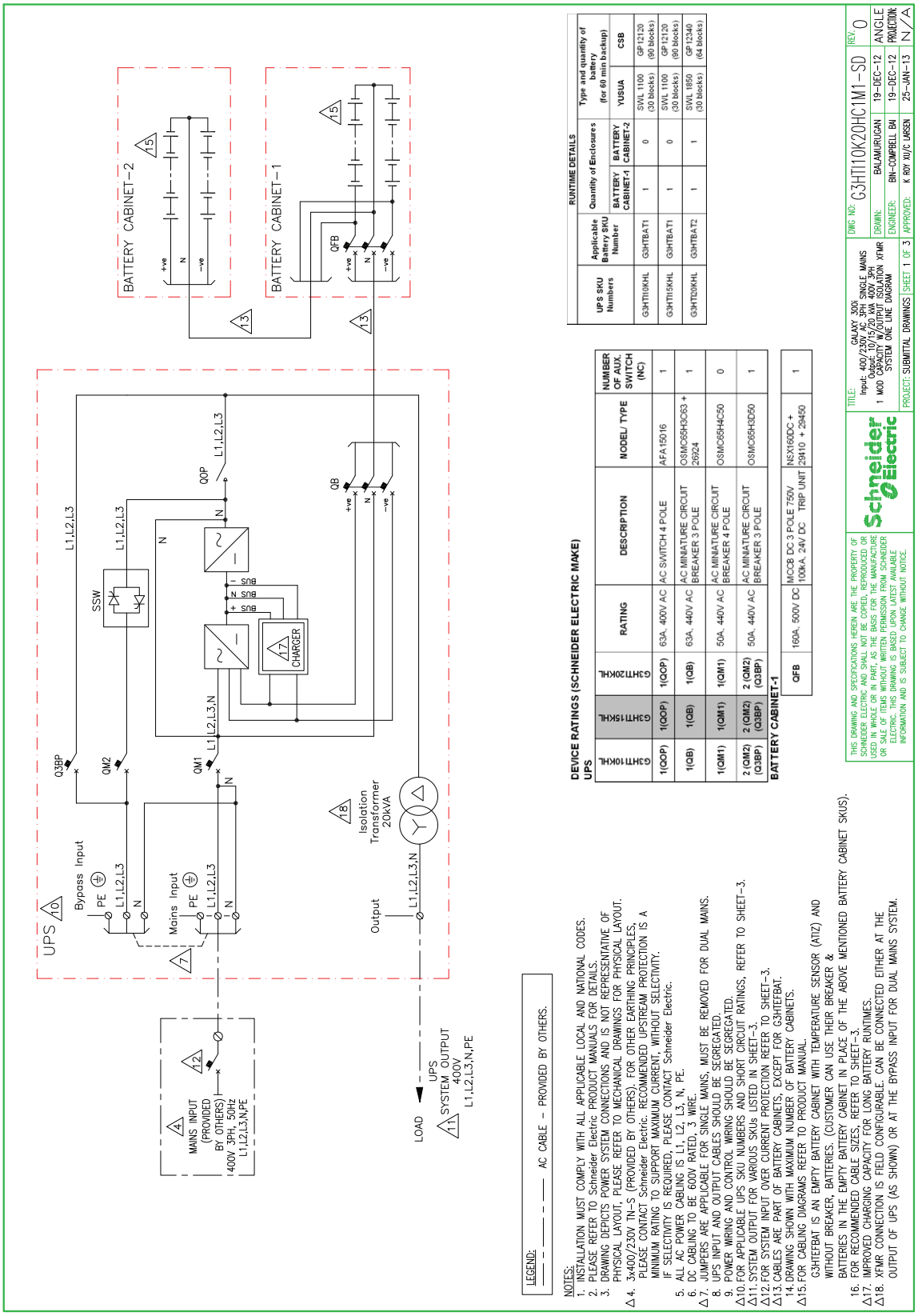

Galaxy 300i 3:3 30–40 kVA Single Mains with Isolation Transformer

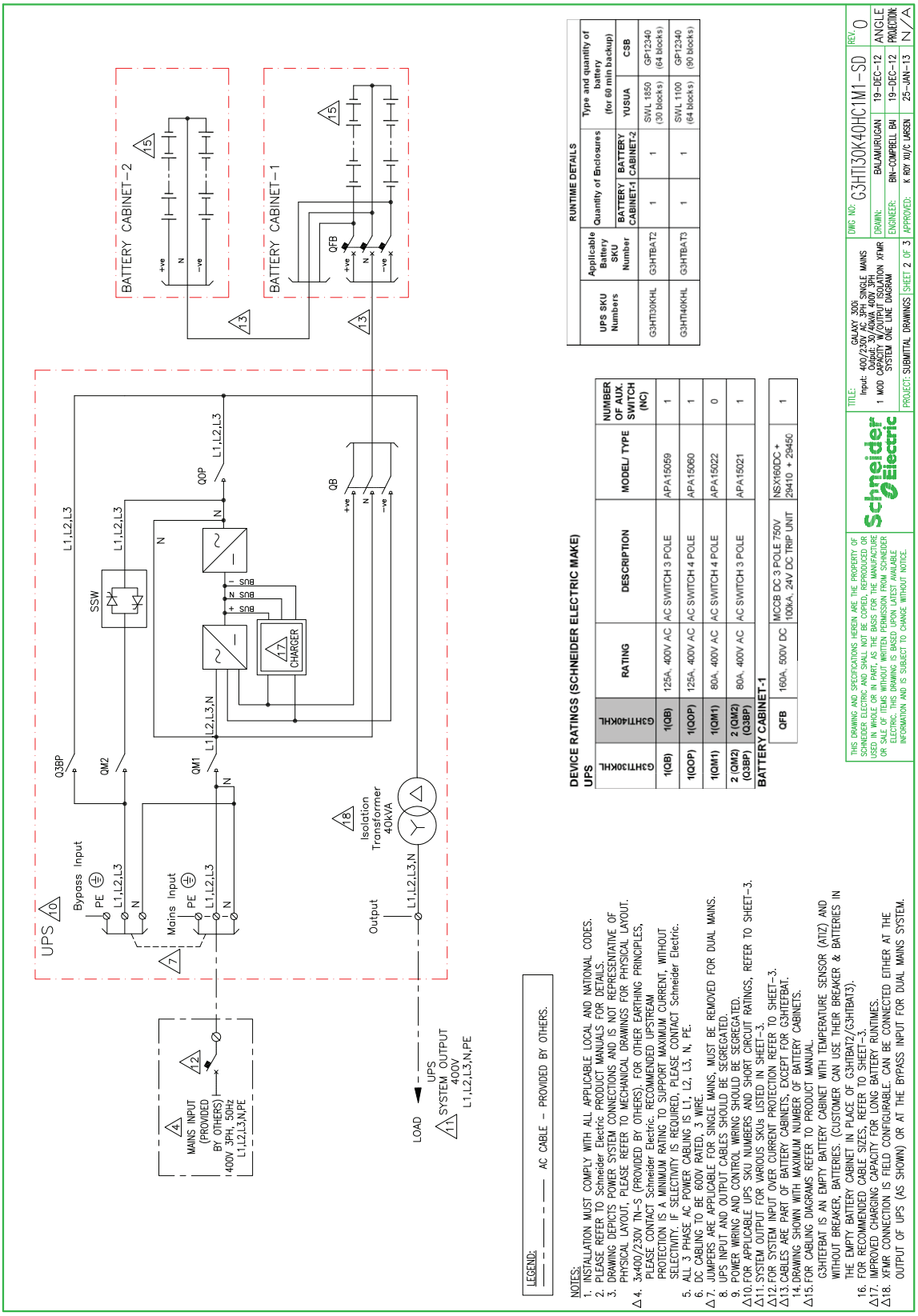

Galaxy 300 3:1 10–20 kVA with Internal Batteries

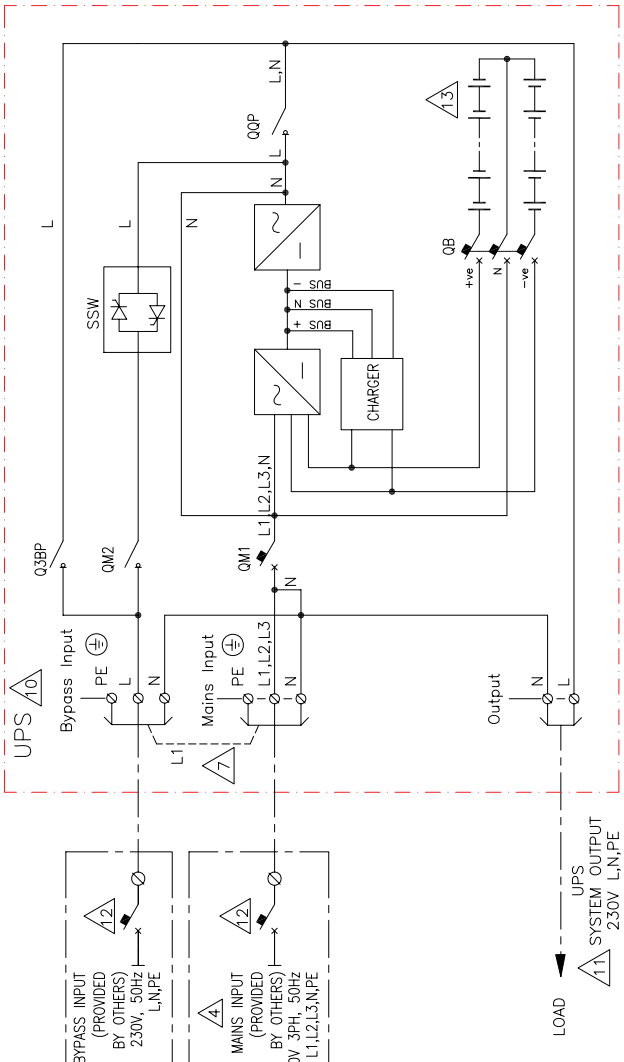

Runtime Details

SKU Number/ (Runtime in Minutes)	Type and quantity of battery: YUASA	Type and quantity of battery: CSB
G3HT10K3IB1S (10 min)	NPW45-12 (32 blocks)	GP1272 (32 blocks)
G3HT10K3IB2S (30 min)	NPW45-12 (64 blocks)	GP1272 (64 blocks)
G3HT15K3IB1S (10 min)	NPW45-12 (32 blocks)	GP12120 (32 blocks)
G3HT15K3IB2S (30 min)	NPW45-12 (90 blocks)	GP1272 (90 blocks)

DEVICE RATINGS (SCHNEIDER ELECTRIC MAKE)

DEVICE ID AND QUANTITY IN EACH SKU													RATING (A)	DESCRIPTION	MODEL/ TYPE	NUMBER OF AUX. SWITCH (NC)
G3HT10K3IB1S	G3HT10K3IB2S	G3HT10K3IS	G3HT15K3IB1S	G3HT15K3IB2S	G3HT15K3IS	G3HT20K3IB1S	G3HT20K3IB2S	G3HT20K3IS								
-	-	-	-	-	-	1(QOP)	1(QOP)	1(QOP)	100	AC SWITCH 4 POLE	APA15093	1
2 (Q3BP) (QM2)	2 (Q3BP) (QM2)	2 (Q3BP) (QM2)	2 (Q3BP) (QM2)	2 (Q3BP) (QM2)	2 (Q3BP) (QM2)	-	-	-	100	AC SWITCH 1 POLE	APA15090	1
1(QOP)	1(QOP)	1(QOP)	1(QOP)	1(QOP)	1(QOP)	2 (Q3BP) (QM2)	2 (Q3BP) (QM2)	2 (Q3BP) (QM2)	100	AC SWITCH 2 POLE	APA15091	1
1(QB)	1(QB)	1(QB)	1(QB)	1(QB)	1(QB)	1(QB)	1(QB)	1(QB)	63	AC MINIATURE CIRCUIT BREAKER 3 POLE	OSMC65H3C63 + 26924	1
1(QM1)	1(QM1)	1(QM1)	1(QM1)	1(QM1)	1(QM1)	1(QM1)	1(QM1)	1(QM1)	50	AC MINIATURE CIRCUIT BREAKER 4 POLE	OSMC65H4C50	0

Schneider Electric

TITLE: GALAXY 300 Input: 400/230V AC 3PH DUAL MAINS Output: 10/15/20 kVA 230V AC 1PH 1 MODULE CAPACITY SYSTEM ONE LINE DIAGRAM

PROJECT: SUBMITTAL DRAWINGS | SHEET 1 OF 3

DWG NO: G3HT10K3I20C1M2-SD | REV. 1

DRAWN:	BALAMURUGAN	20-APR-11	ANGLE
ENGINEER:	KJWU	28-APR-11	PROJECTION
APPROVED:	CJARSEN/SJWAGH	28-APR-11	N/A

LEGEND:
—— - —— - —— AC CABLE – PROVIDED BY OTHERS.

NOTES:
1. INSTALLATION MUST COMPLY WITH ALL APPLICABLE LOCAL AND NATIONAL CODES.
2. PLEASE REFER TO APC by Schneider Electric PRODUCT MANUALS FOR DETAILS.
3. DRAWING DEPICTS POWER SYSTEM CONNECTIONS AND IS NOT REPRESENTATIVE OF PHYSICAL LAYOUT, PLEASE REFER TO MECHANICAL DRAWINGS FOR PHYSICAL LAYOUT.
△4. 3x400/230V TN–S (PROVIDED BY OTHERS). FOR OTHER EARTHING PRINCIPLES, PLEASE CONTACT APC by Schneider Electric. RECOMMENDED UPSTREAM PROTECTION IS A MINIMUM RATING TO SUPPORT MAXIMUM CURRENT, WITHOUT SELECTIVITY. IF SELECTIVITY IS REQUIRED, PLEASE CONTACT APC by Schneider Electric.
5. ALL 3 PHASE AC POWER CABLING IS L1, L2, L3, N, PE.
6. DC CABLING TO BE 600V RATED, 3 WIRE.
△7. JUMPERS ARE APPLICABLE FOR SINGLE MAINS, MUST BE REMOVED FOR DUAL MAINS.
8. UPS INPUT AND OUTPUT CABLES SHOULD BE SEGREGATED.
9. POWER WIRING AND CONTROL WIRING SHOULD BE SEGREGATED.
△10. APPLICABLE UPS SKU NUMBERS LISTED IN SHEET–3.
△11. SYSTEM OUTPUT FOR VARIOUS SKUs LISTED IN SHEET–3.
△12. FOR SYSTEM INPUT OVER CURRENT PROTECTION REFER TO SHEET–3.
△13. SKUs G3HT10K3IS, G3HT15K3IS AND G3HT20K3IS HAVE NO BATTERIES.
14. FOR RECOMMENDED CABLE SIZES, REFER TO SHEET–3.

Galaxy 300 3:1 30 kVA with Internal Batteries

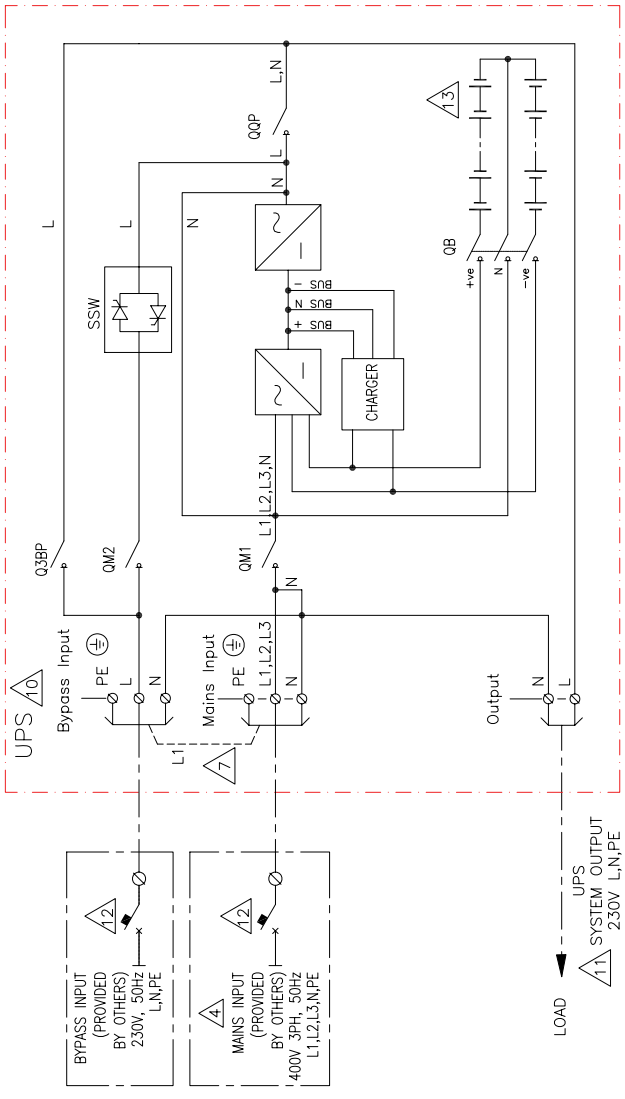

DEVICE RATINGS (SCHNEIDER ELECTRIC MAKE)

DEVICE ID AND			RATING (A)	DESCRIPTION	MODEL/ TYPE	NUMBER OF AUX. SWITCH (NC)
G3HT30K3IB1S	G3HT30K3IB2S	G3HT30K3IS				
1(QOP)	1(QOP)	1(QOP)	100	AC SWITCH 4 POLE	APA15093	1
1(QB)	1(QB)	1(QB)	125	AC SWITCH 3 POLE	APA15059	1
2 (Q3BP) (QM2)	2 (Q3BP) (QM2)	2 (Q3BP) (QM2)	100	AC SWITCH 2 POLE	APA15091	1
1(QM1)	1(QM1)	1(QM1)	80	AC SWITCH 4 POLE	APA15022	0

Runtime Details

SKU Number/ (Runtime in Minutes)	Type and quantity of battery	
	YUASA	CSB
G3HT20K3IB1S (10 min)	NPW45-12 (64 blocks)	GP1272 (64 blocks)
G3HT20K3IB2S (25 min)	NPW45-12 (90 blocks)	GP12120 (64 blocks)
G3HT30K3IB1S (10 min)	NPW45-12 (90 blocks)	GP1272 (90 blocks)
G3HT30K3IB2S ((25 min)	NPW45-12 (150 blocks)	GP12120 (90 blocks)

LEGEND:
— — — — — — AC CABLE – PROVIDED BY OTHERS.

NOTES:
1. INSTALLATION MUST COMPLY WITH ALL APPLICABLE LOCAL AND NATIONAL CODES.
2. PLEASE REFER TO APC by Schneider Electric PRODUCT MANUALS FOR DETAILS.
3. DRAWING DEPICTS POWER SYSTEM CONNECTIONS AND IS NOT REPRESENTATIVE OF PHYSICAL LAYOUT. PLEASE REFER TO MECHANICAL DRAWINGS FOR PHYSICAL LAYOUT.
△4. 3x400/230V TN–S (PROVIDED BY OTHERS). FOR OTHER EARTHING PRINCIPLES, PLEASE CONTACT APC by Schneider Electric. RECOMMENDED UPSTREAM PROTECTION IS A MINIMUM RATING TO SUPPORT MAXIMUM CURRENT, WITHOUT SELECTIVITY. IF SELECTIVITY IS REQUIRED, PLEASE CONTACT APC by Schneider Electric.
5. ALL 3 PHASE AC POWER CABLING IS L1, L2, L3, N, PE.
6. DC CABLING TO BE 600V RATED, 3 WIRE.
△7. JUMPERS ARE APPLICABLE FOR SINGLE MAINS, MUST BE REMOVED FOR DUAL MAINS.
8. UPS INPUT AND OUTPUT CABLES SHOULD BE SEGREGATED.
9. POWER WIRING AND CONTROL WIRING SHOULD BE SEGREGATED.
△10. APPLICABLE UPS SKU NUMBERS LISTED IN SHEET–3.
△11. SYSTEM OUTPUT FOR VARIOUS SKUs LISTED IN SHEET–3.
△12. FOR SYSTEM INPUT OVER CURRENT PROTECTION REFER TO SHEET–3.
△13. SKU G3HT30K3IS HAS NO BATTERIES.
14. FOR RECOMMENDED CABLE SIZES, REFER TO SHEET–3.

Schneider Electric

TITLE: GALAXY 300
Input: 400/230V AC 3PH, DUAL MAINS
Output: 30kVA 230V AC 1PH
1 MODULE CAPACITY
SYSTEM ONE LINE DIAGRAM

DWG NO: G3HT30K3IC1M2–SD REV: 1
DRAWN: BALAMURUGAN 20–APR–11 ANGLE
ENGINEER: KJWU 28–APR–11 PROJECTION:
PROJECT: SUBMITTAL DRAWINGS SHEET 2 OF 3 APPROVED: CLARSEN/SJWAGH 28–APR–11 N/A

Galaxy 300i 3:1 10–20 kVA Dual Mains with Isolation Transformer

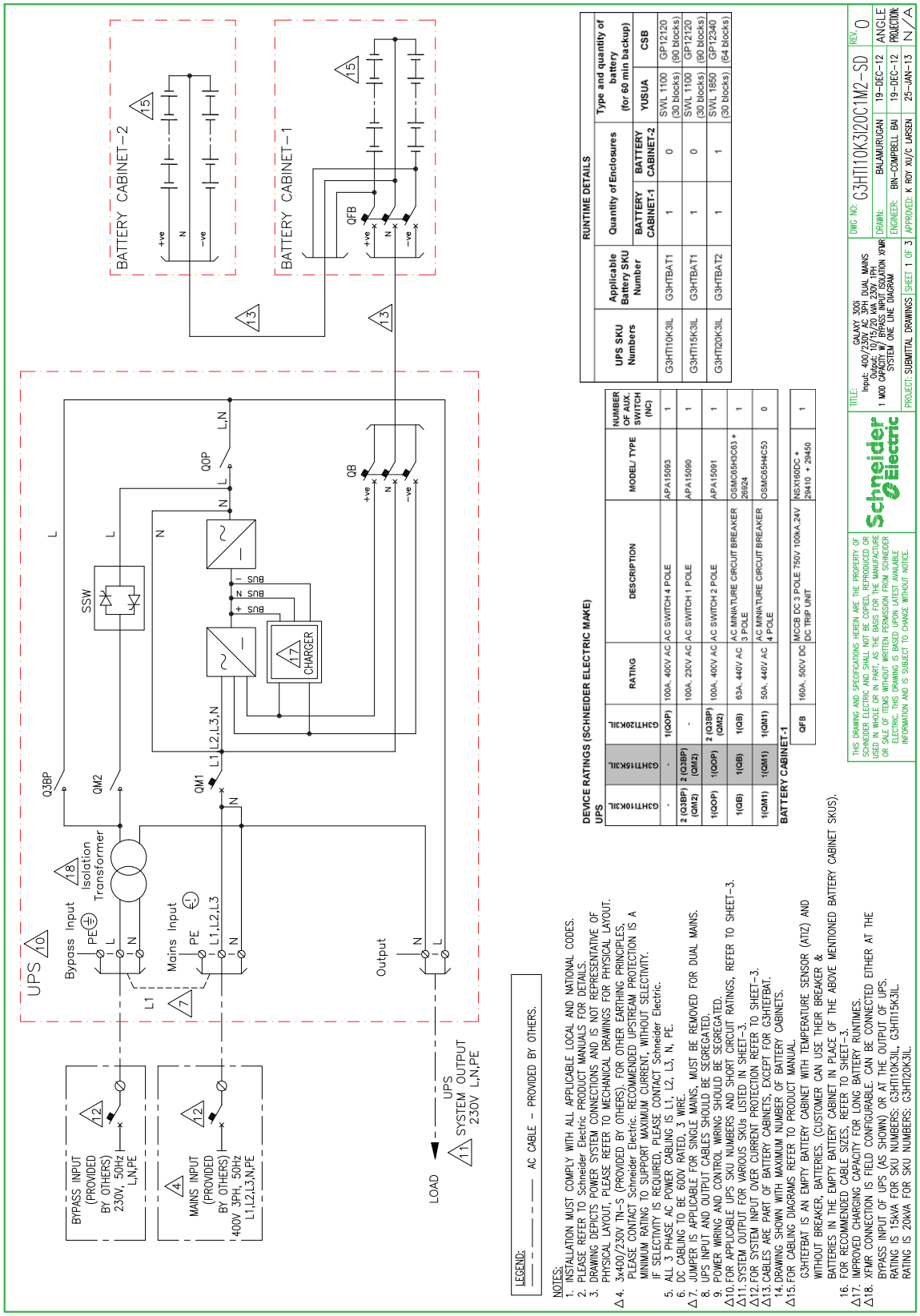

Galaxy 300i 3:1 30 kVA Dual Mains with Isolation Transformer

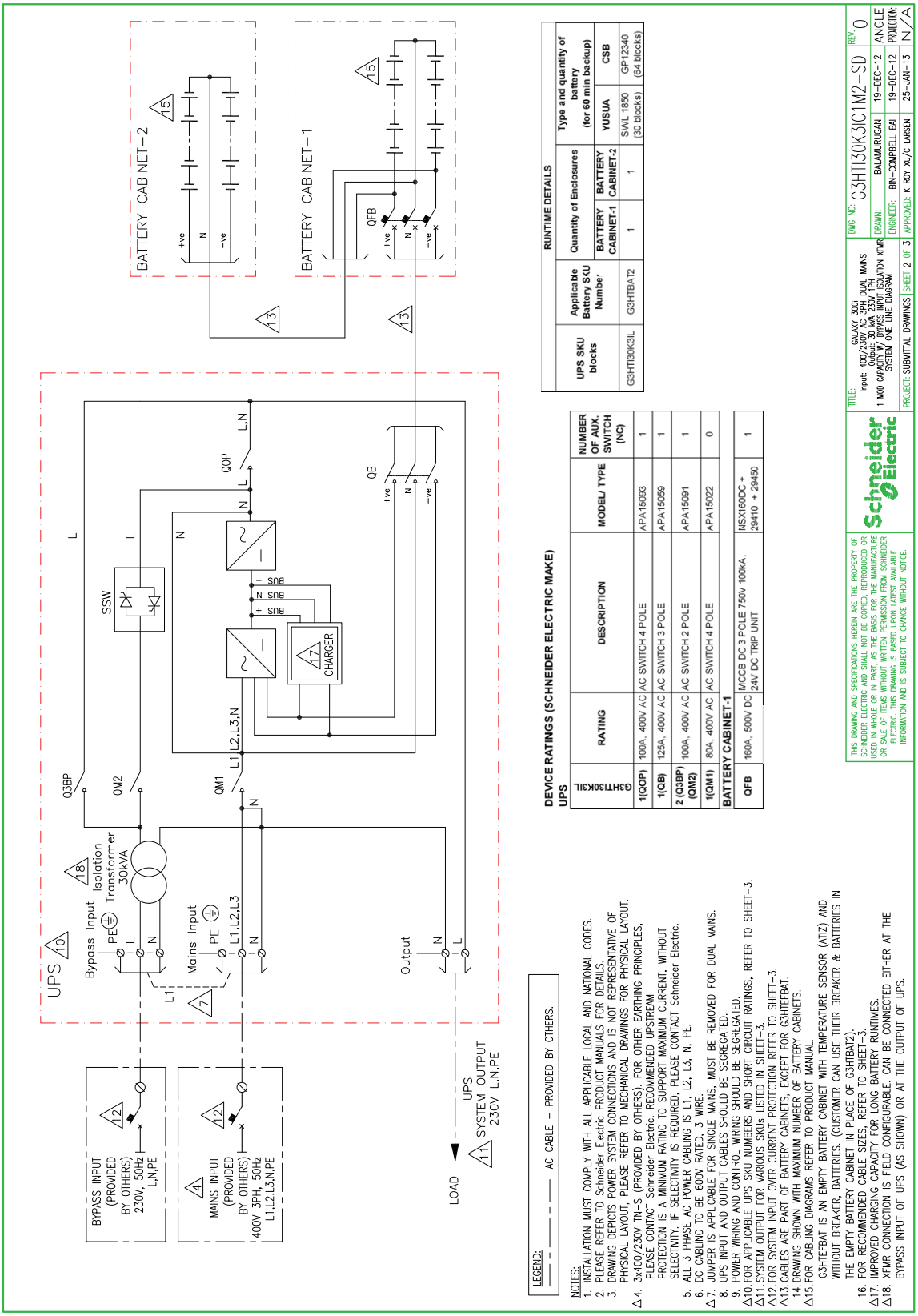

Galaxy 300i 3:1 10–20 kVA Single Mains with Isolation Transformer

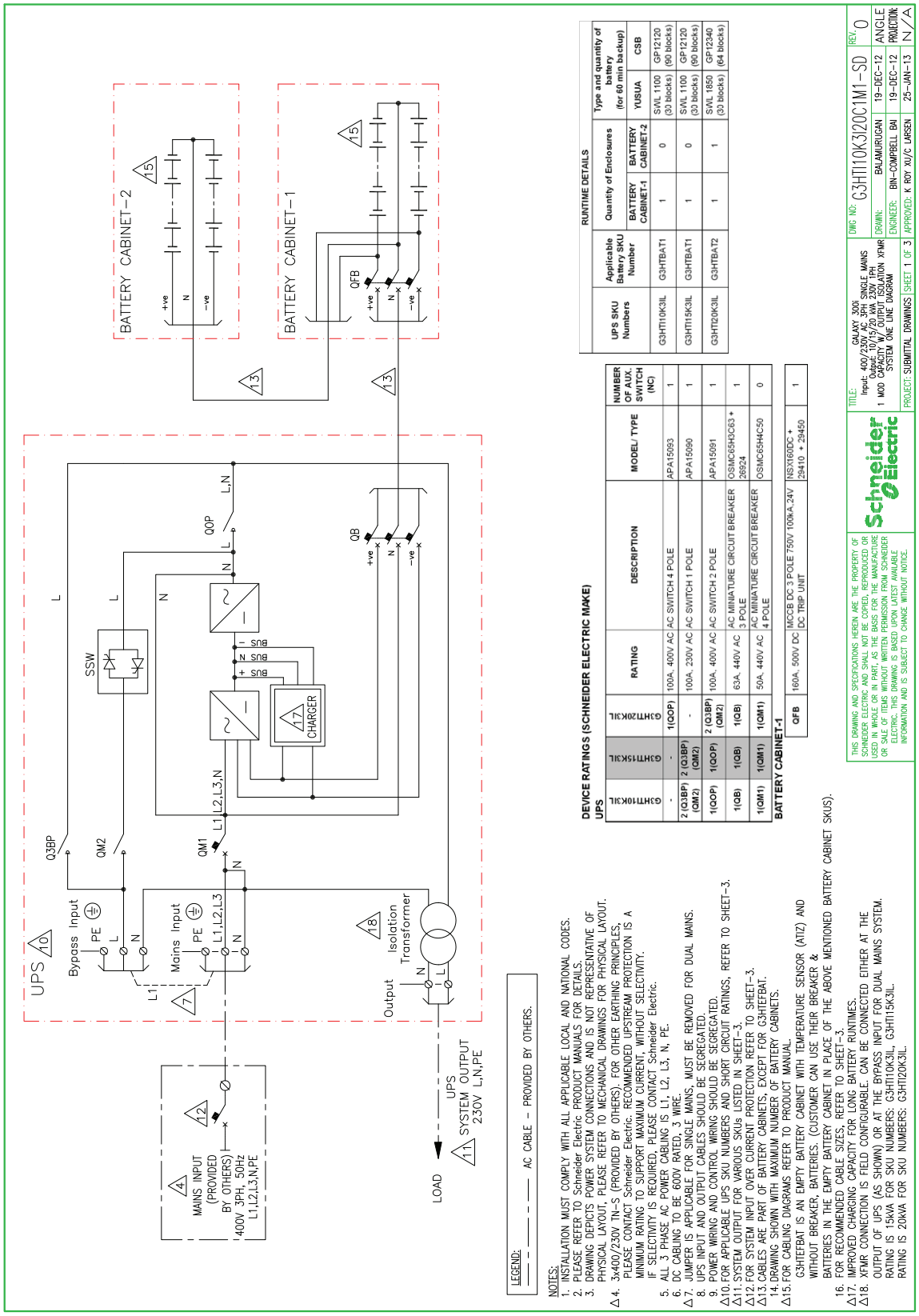

NOTES:
1. INSTALLATION MUST COMPLY WITH ALL APPLICABLE LOCAL AND NATIONAL CODES.
2. PLEASE REFER TO Schneider Electric PRODUCT MANUALS FOR DETAILS.
3. DRAWING DEPICTS POWER SYSTEM CONNECTIONS AND IS NOT REPRESENTATIVE OF PHYSICAL LAYOUT, PLEASE REFER TO MECHANICAL DRAWINGS FOR PHYSICAL LAYOUT.
△4. 3x400/230V TN-S (PROVIDED BY OTHERS). FOR OTHER EARTHING PRINCIPLES, PLEASE CONTACT Schneider Electric. RECOMMENDED UPSTREAM PROTECTION IS A MINIMUM RATING TO SUPPORT MAXIMUM CURRENT; WITHOUT SELECTIVITY. IF SELECTIVITY IS REQUIRED, PLEASE CONTACT Schneider Electric.
5. ALL 3 PHASE AC POWER CABLING IS L1, L2, L3, N, PE.
6. DC CABLING TO BE 600V RATED, 3 WIRE.
△7. JUMPER IS APPLICABLE FOR SINGLE MAINS, MUST BE REMOVED FOR DUAL MAINS.
8. UPS INPUT AND OUTPUT CABLES SHOULD BE SEGREGATED.
9. POWER WIRING AND CONTROL WIRING SHOULD BE SEGREGATED.
△10. FOR APPLICABLE UPS SKU NUMBERS AND SHORT CIRCUIT RATINGS, REFER TO SHEET-3.
△11. SYSTEM OUTPUT FOR VARIOUS SKUs LISTED IN SHEET-3.
△12. FOR SYSTEM INPUT OVER CURRENT PROTECTION REFER TO SHEET-3.
△13. CABLES ARE PART OF BATTERY CABINETS, EXCEPT FOR G3HTEFBAT.
14. DRAWING SHOWN WITH MAXIMUM NUMBER OF BATTERY CABINETS.
△15. FOR CABLING DIAGRAMS REFER TO PRODUCT MANUAL.
G3HTEFBAT IS AN EMPTY BATTERY CABINET WITH TEMPERATURE SENSOR (ATIZ) AND WITHOUT BREAKER, BATTERIES. (CUSTOMER CAN USE THEIR BREAKER & BATTERIES IN THE EMPTY BATTERY CABINET IN PLACE OF THE ABOVE MENTIONED BATTERY CABINET SKUS).
16. FOR RECOMMENDED CABLE SIZES, REFER TO SHEET-3.
△17. IMPROVED CHARGING CAPACITY FOR LONG BATTERY RUNTIMES.
△18. XFMR CONNECTION IS FIELD CONFIGURABLE. CAN BE CONNECTED EITHER AT THE OUTPUT OF UPS (AS SHOWN) OR AT THE BYPASS INPUT FOR DUAL MAINS SYSTEM. RATING IS 15KVA FOR SKU NUMBERS: G3HT110K3IL, G3HT115K3IL. RATING IS 20KVA FOR SKU NUMBERS: G3HT120K3IL.

Galaxy 300i 3:1 30 kVA Single Mains with Isolation Transformer

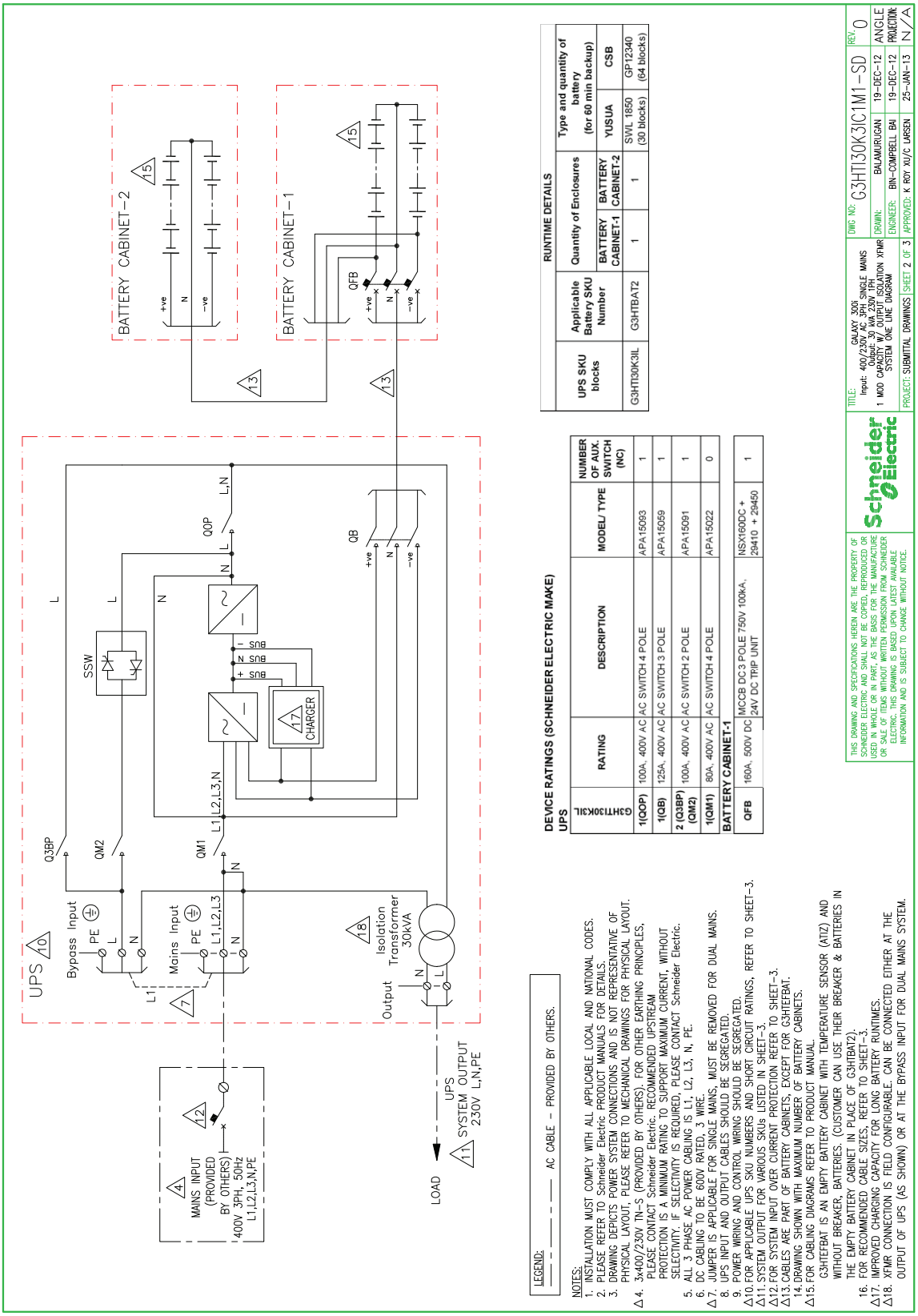

Options

Hardware Options

Galaxy 300 Battery Cabinet (1300 mm)

NOTE: Battery cabinets must be used with UPS with CLA only. Battery cabinets permit to get runtimes higher than 30 min - typically from 45 min up to 4 hours (depending on the kVA size).

- Galaxy 300 empty battery cabinet (G3HTEFBAT)
- Galaxy 300 battery cabinet 1 (G3HTBAT1)
- Galaxy 300 battery cabinet 2 (G3HTBAT2)
- Galaxy 300 battery cabinet 3 (G3HTBAT3)

1900 mm Battery Cabinet

- 1900 mm battery cabinet – narrow (G55TAB1)[18]
- 1900 mm battery cabinet – wide (G55TAB2)[18]
- Galaxy 300 kit for battery cabinet with battery circuit breaker and temperature sensor (G3HTOPT007)

Accessories

- Galaxy 300 parallel configuration kit for 2 UPS units (redundancy 1+1), Start-up 5x8 (G3HTPARKITS)
- UPS network management card 2 with environmental monitoring, out of band access and modbus (AP9635)

Adaptation Kit for IP21

- Galaxy 300 adaptation kit for IP21 for narrow UPS (400 mm) (G3HTOPT001)
- Galaxy 300 adaptation kit for IP21 for wide UPS (500 mm) (G3HTOPT002)
- Galaxy 300 adaptation kit for IP21 battery cabinet (G3HTOPT003)

Dust Filter

- Galaxy 300/300i dust filter for narrow UPS (400 mm) (G3HTOPT005)
- Galaxy 300/300i dust filter for wide UPS (500 mm) (G3HTOPT006)

Configuration Options

Battery Cabinets

There are different battery cabinets for additional runtime. These battery cabinets are to be used only with a UPS without internal batteries and a strong charger (0min + CLA). Each battery cabinet contains 12 V batteries providing additional runtime for the UPS. The cabinets have a built-in battery temperature monitoring capability that will communicate with the Galaxy 300. The battery disconnect switch is also placed in this area.

18. Large capacity battery cabinet – Must be ordered with the Galaxy 300 kit (G3HTOPT007).

Parallel Capabilities

⚠ DANGER

HAZARD OF ELECTRIC SHOCK, EXPLOSION, OR ARC FLASH

Two UPSs in parallel CANNOT share the same battery.

Failure to follow these instructions will result in death or serious injury.

⚠ DANGER

HAZARD OF ELECTRIC SHOCK, EXPLOSION, OR ARC FLASH

Installation of the parallel boards must ONLY be performed by a Schneider Electric service engineer.

Failure to follow these instructions will result in death or serious injury.

NOTE: The units leave the factory with standard single-UPS mode parameter settings. These settings must be personalized as parallel mode on customer side.

NOTE: If input and bypass are using different sources, it is possible to install the transformer cabinet on bypass.

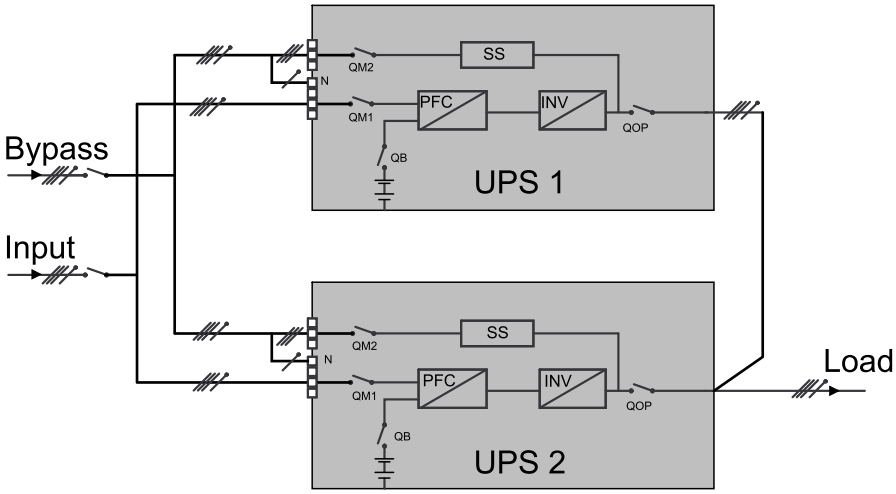

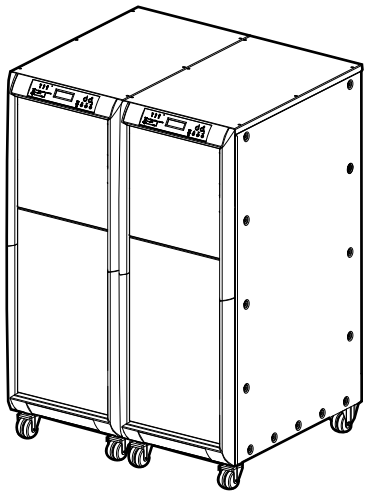

Galaxy 300 can be installed in parallel to create a redundant system (1+1) with two UPS units of the same kVA range.

In a parallel system, each UPS can still use its own internal bypass. An external system bypass is not mandatory, but may be installed optionally.

When setting up a parallel system, the parallel communications kit has to be purchased separately (one kit for two UPS units) and be installed by a Schneider Electric service engineer. The parallel communication kit contains:

- Two parallel boards (one for each UPS)
- Cables: 5 m and 15 m that connect between the DB9 communication ports on the back of each UPS
  - 5 m cable to be used when the UPS units are installed side-by-side
  - 15 m cable to be used when the two UPS are installed further from each other

Placement of the two UPS Units in Parallel

The two UPS units in parallel can be placed anywhere in the setup, as long as the 15 m cable can still reach between them.

Example with the two UPS unit in parallel placed together in the middle

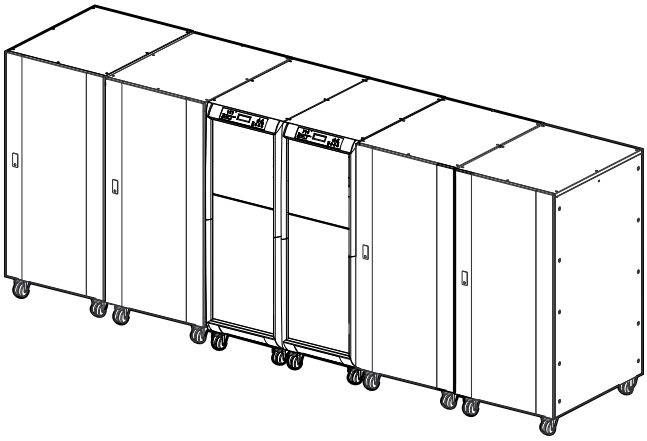

Example with the two UPS units in parallel placed at opposite ends of the setup

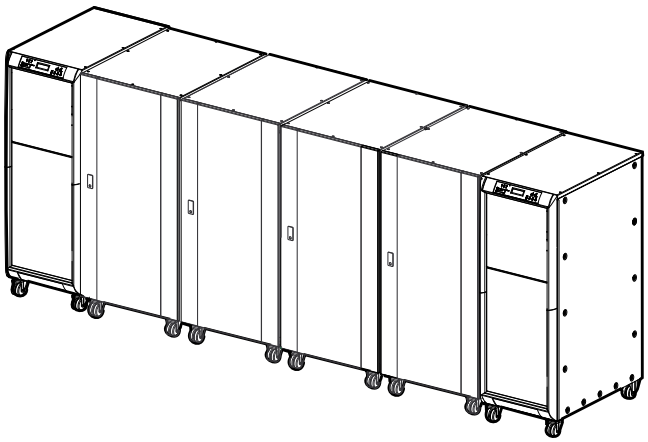

Typical Parallel System Installation – Galaxy 300

⚠ DANGER

HAZARD OF ELECTRIC SHOCK, EXPLOSION, OR ARC FLASH

- If a Residual Current Protection (RCP) is used, use only one RCP per source. Example: If the whole installation is single source then only one RCP must be used (see drawings below).
- The power cables connected to the two UPSs in parallel must have the same dimension and length.

Failure to follow these instructions will result in death or serious injury.

Galaxy 300 UPS 3:1 Single Mains

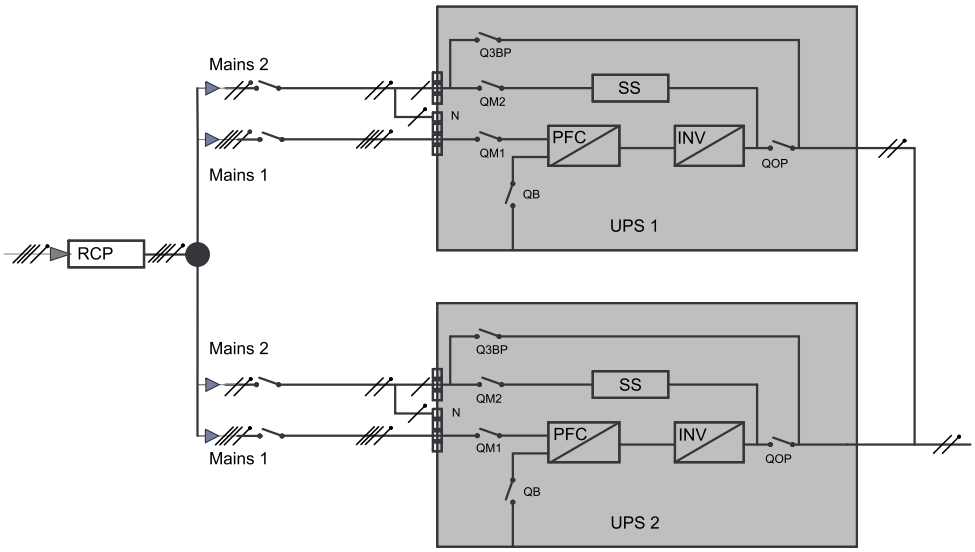

Galaxy 300 UPS 3:1 Dual Mains

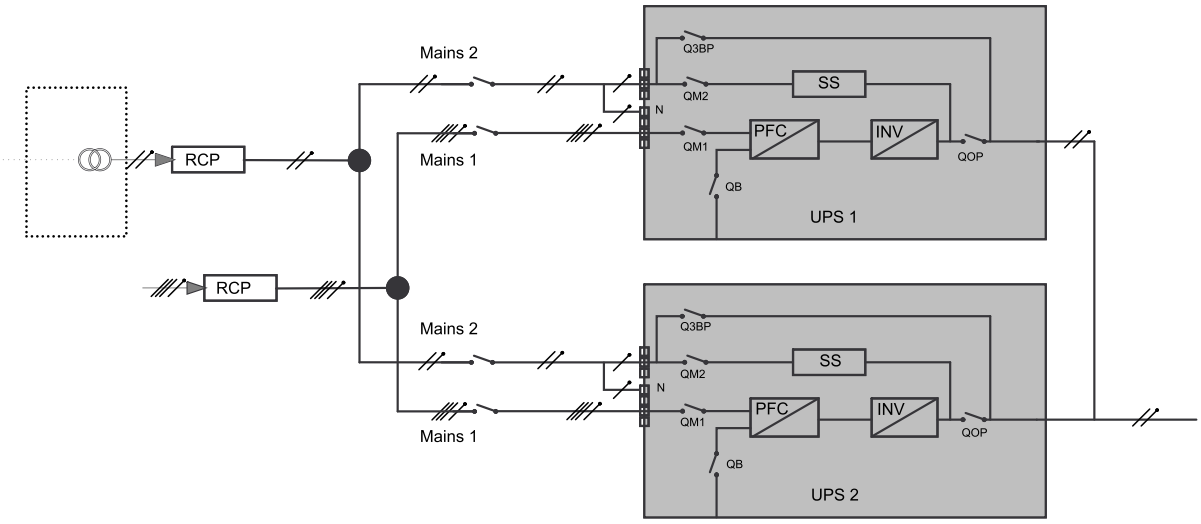

Galaxy 300 UPS 3:3 Single Mains

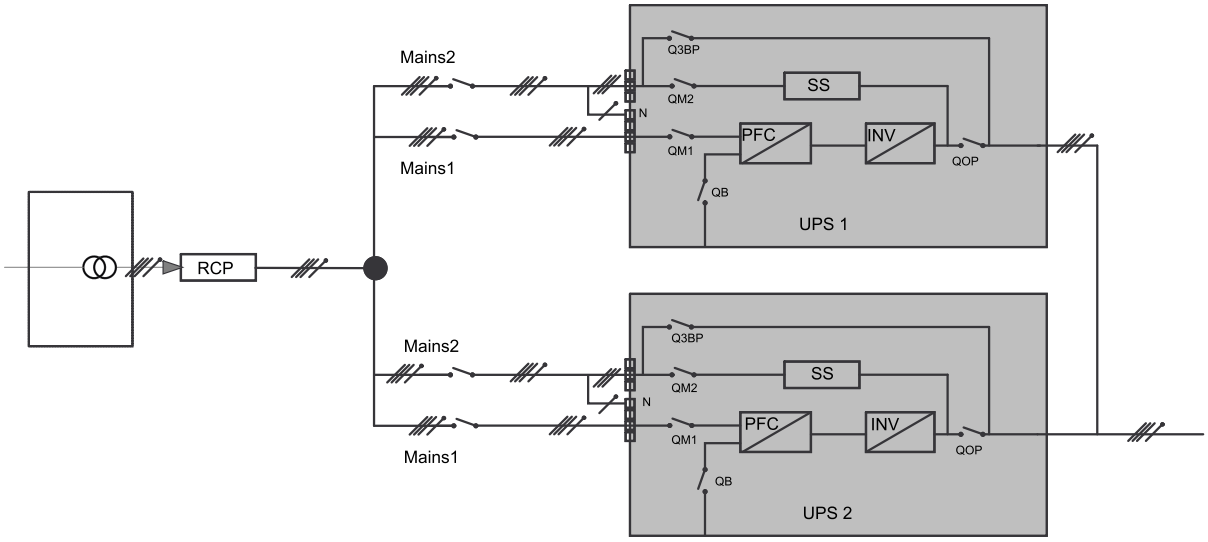

Galaxy 300 UPS 3:3 Dual Mains

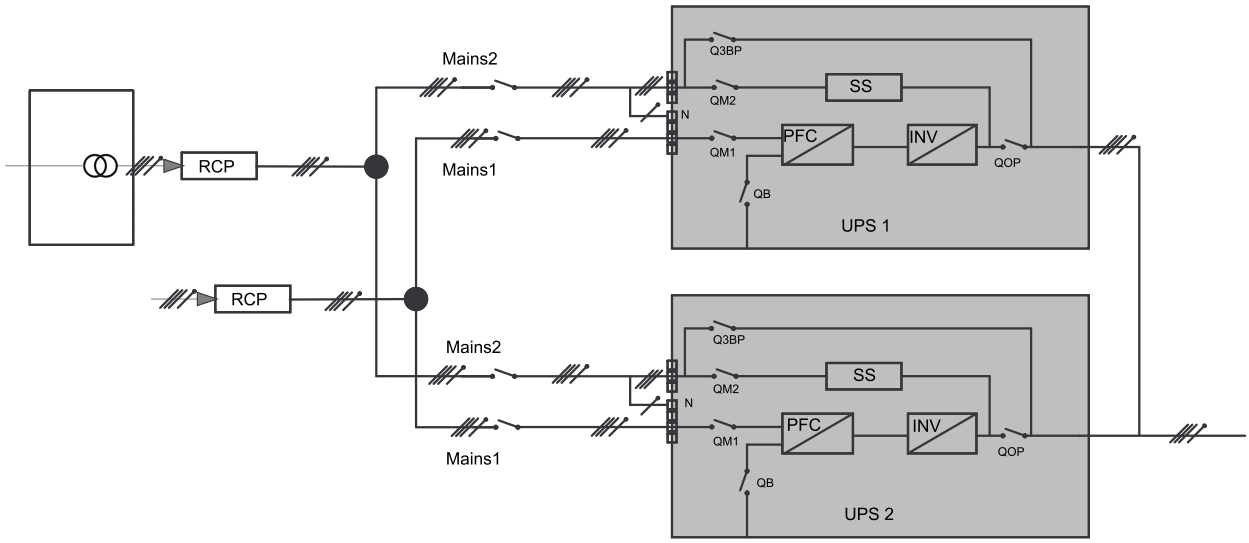

Galaxy 300 UPS 3:3 Standby Redundancy

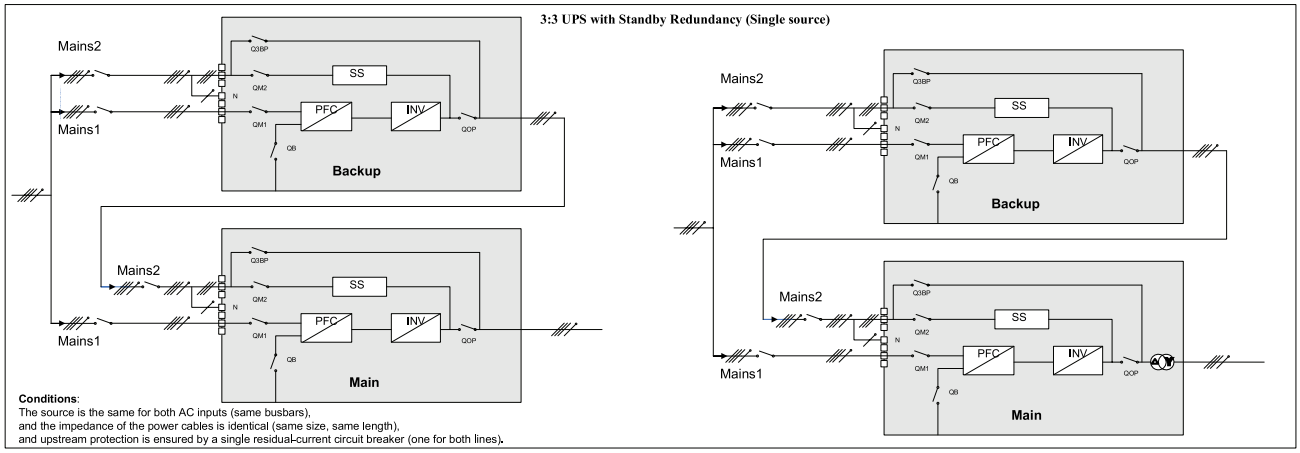

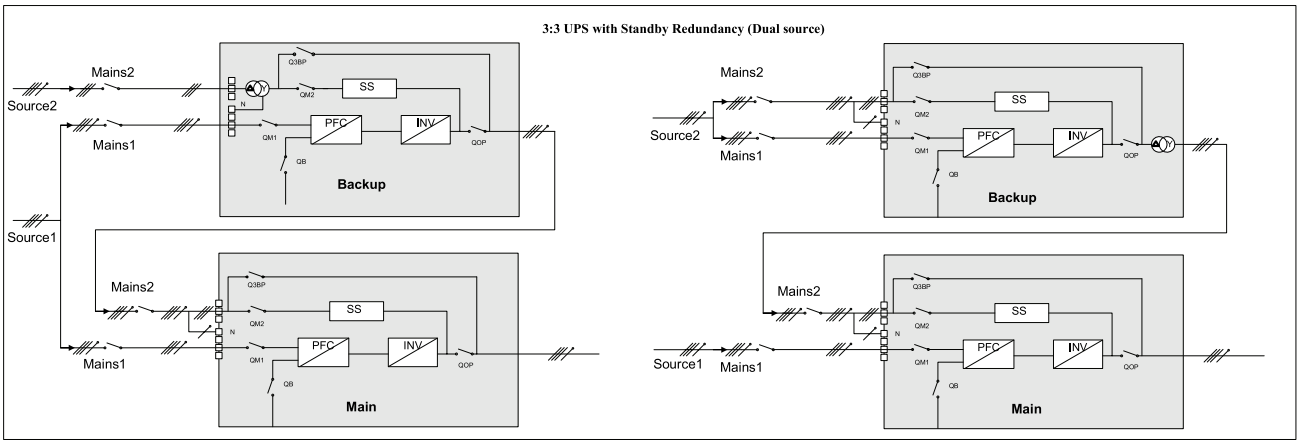

Galaxy 300 UPS 3:1 Standby Redundancy

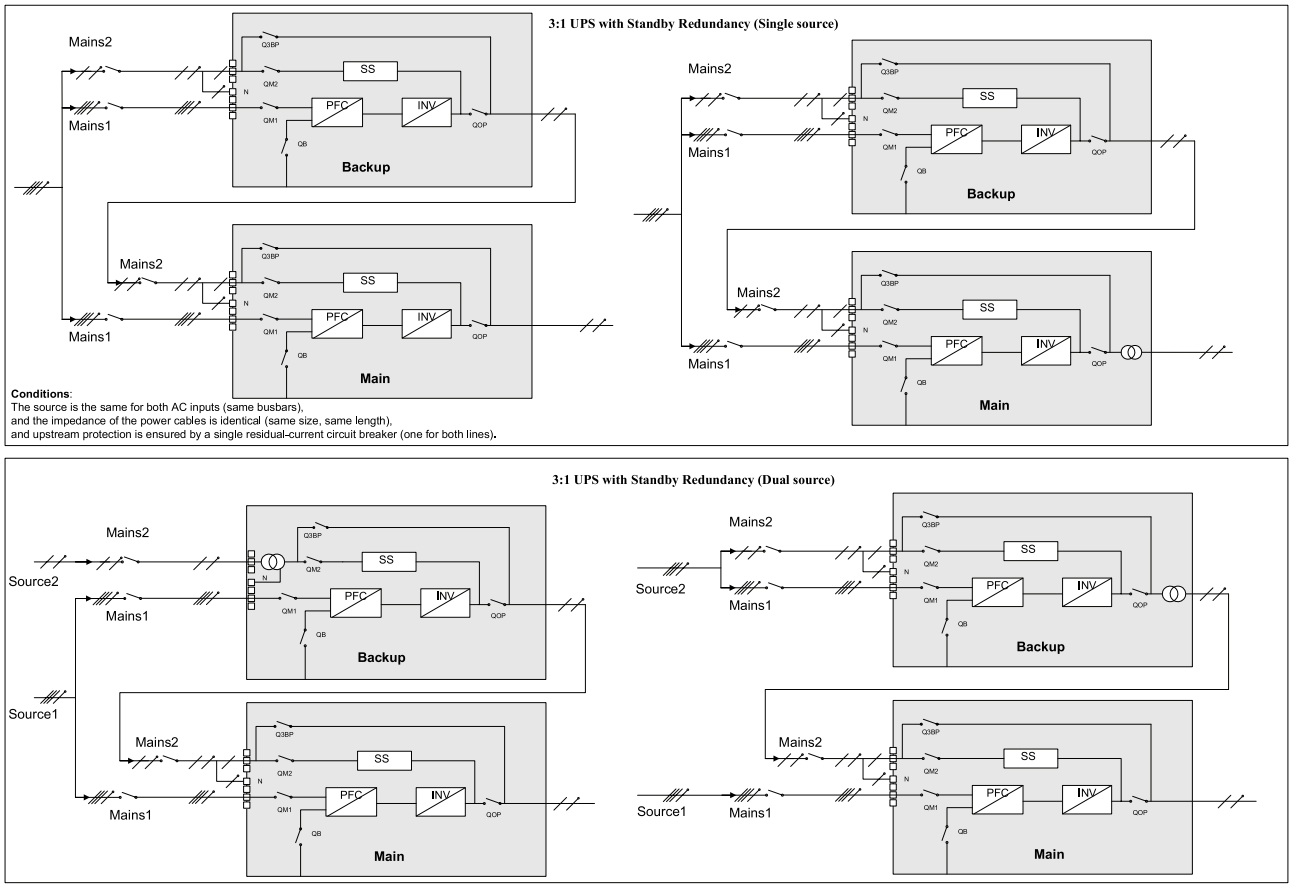

Typical Parallel System Installation – Galaxy 300i UPS with Integrated Transformer

Galaxy 300i UPS with Integrated Transformer 3:1 Single Mains

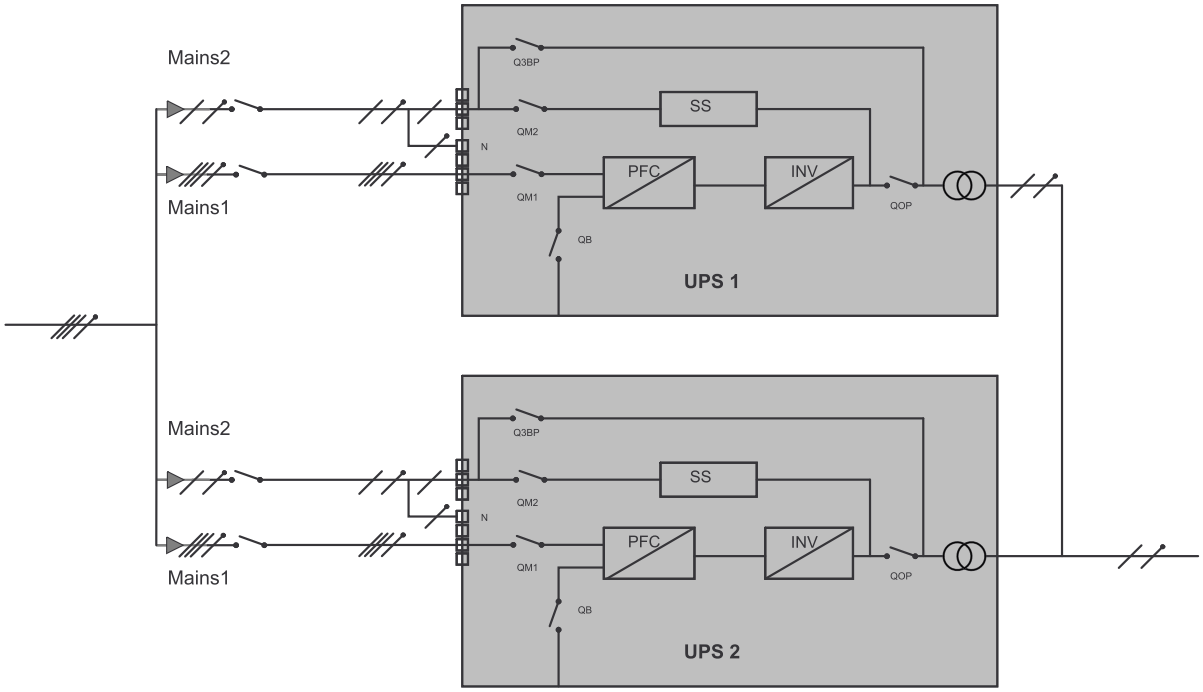

Galaxy 300i UPS with Integrated Transformer 3:3 Single Mains

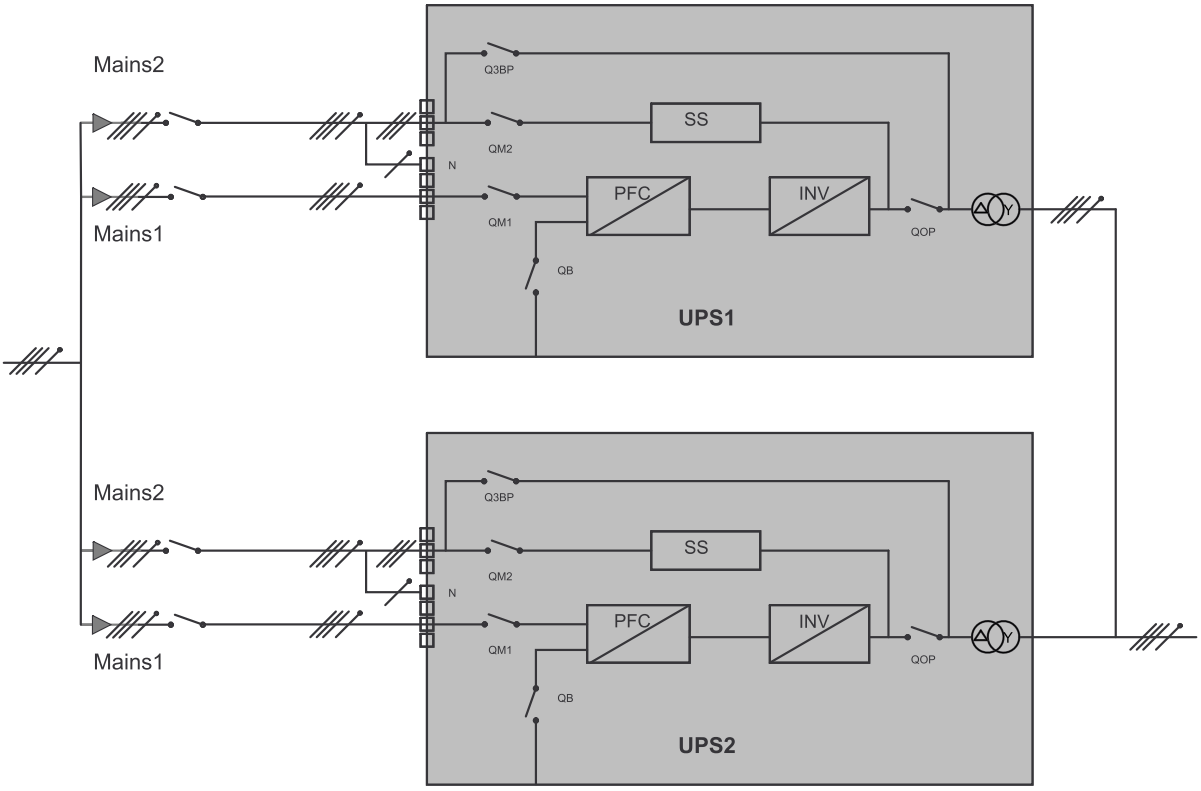

Additional Specifications for Galaxy 300i UPS with Integrated Transformer

Description

Galaxy 300i with integrated transformer permits to perform a galvanic isolation between the system input and output, with the same footprint as the standard Galaxy 300. It is available both in 3:1 version (with integrated 1-phase transformer) and in 3:3 version (with integrated 3-phase transformer).

The transformer is integrated in the 0min + CLA UPS version only, and is positioned at the bottom of the UPS cabinet. Only external batteries are supported.

By performing simple adjustments to the product wirings and connections, the transformer can be configured on site as either:

1. Output transformer, or
2. Bypass transformer

Galaxy 300i UPS with Integrated Transformer Configured as Output Transformer (Single Mains)

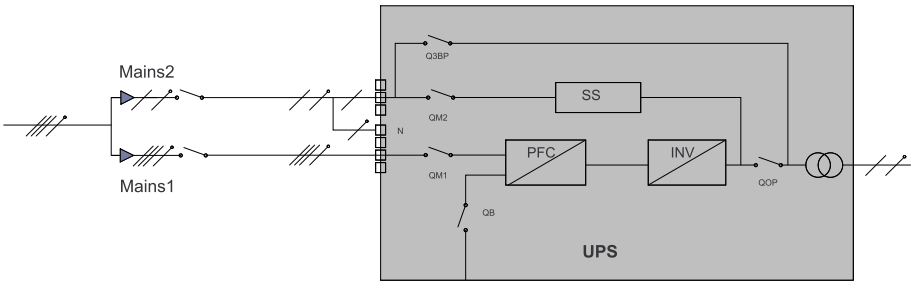

Galaxy 300i UPS with Integrated Transformer Configured as Bypass Transformer (Dual Mains, Separated Sources)

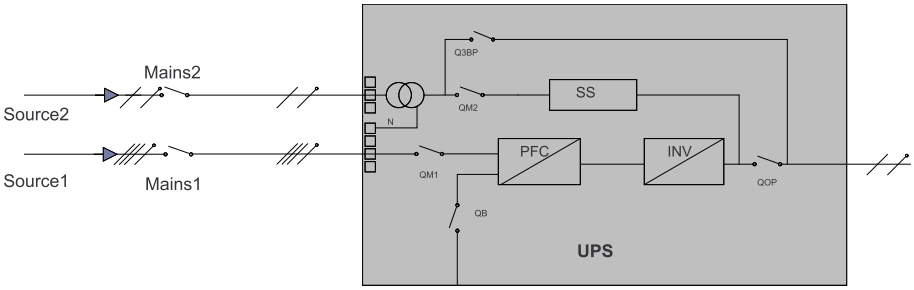

Special Features and Characteristics

Available transformer configurations			
	Galaxy 300i UPS with integrated transformer 3:1	**Galaxy 300i UPS with integrated transformer 3:3**	
Output Transformer	Yes	Yes	The transformer is connected to the UPS output and to the load. Common mains only, no separated mains. Parallel system possible (1+1).
Bypass Transformer	Yes	Yes	The transformer is connected to the bypass source and UPS bypass Input. Only with two separated sources (input and bypass). Parallel system not possible.

Typical transformer impact compared to the standard Galaxy 300 UPS		
Efficiency	-3%[19]	Typical efficiency loss at 100% load due to the transformer
Output voltage	-4V [19]	Typical voltage drop at 100% load due to the transformer

19. Only when the transformer is configured for output isolation

Limited Factory Warranty

One-Year Factory Warranty

The limited warranty provided by Schneider Electric in this Statement of Limited Factory Warranty applies only to products you purchase for your commercial or industrial use in the ordinary course of your business.

Terms of Warranty

Schneider Electric warrants that the product shall be free from defects in materials and workmanship for a period of one year from the date of product start-up when start-up is performed by Schneider Electric-authorized service personnel and occurs within six months of the Schneider Electric shipment date. This warranty covers repairing or replacing any defective parts including on-site labor and travel. In the event that the product fails to meet the foregoing warranty criteria, the warranty covers repairing or replacing defective parts at the sole discretion of Schneider Electric for a period of one year from the shipment date. For Schneider Electric cooling solutions, this warranty does not cover circuit breaker resetting, loss of refrigerant, consumables, or preventive maintenance items. Repair or replacement of a defective product or part thereof does not extend the original warranty period. Any parts furnished under this warranty may be new or factory-remanufactured.

Non-transferable Warranty

This warranty is extended to the first person, firm, association or corporation (herein referred to by “You” or “Your”) for whom the Schneider Electric product specified herein has been purchased. This warranty is not transferable or assignable without the prior written permission of Schneider Electric.

Assignment of Warranties

Schneider Electric will assign you any warranties which are made by manufacturers and suppliers of components of the Schneider Electric product and which are assignable. Any such warranties are assigned “AS IS” and Schneider Electric makes no representation as to the effectiveness or extent of such warranties, assumes no responsibility for any matters which may be warranted by such manufacturers or suppliers and extends no coverage under this Warranty to such components.

Drawings, Descriptions

Schneider Electric warrants for the warranty period and on the terms of the warranty set forth herein that the Schneider Electric product will substantially conform to the descriptions contained in the Schneider Electric Official Published Specifications or any of the drawings certified and agreed to by contract with Schneider Electric if applicable thereto (“Specifications”). It is understood that the Specifications are not warranties of performance and not warranties of fitness for a particular purpose.

Exclusions

Schneider Electric shall not be liable under the warranty if its testing and examination disclose that the alleged defect in the product does not exist or was

caused by end user or any third person misuse, negligence, improper installation or testing. Further, Schneider Electric shall not be liable under the warranty for unauthorized attempts to repair or modify wrong or inadequate electrical voltage or connection, inappropriate on-site operation conditions, corrosive atmosphere, repair, installation, start-up by non-Schneider Electric designated personnel, a change in location or operating use, exposure to the elements, Acts of God, fire, theft, or installation contrary to Schneider Electric recommendations or specifications or in any event if the Schneider Electric serial number has been altered, defaced, or removed, or any other cause beyond the range of the intended use.

THERE ARE NO WARRANTIES, EXPRESS OR IMPLIED, BY OPERATION OF LAW OR OTHERWISE, OF PRODUCTS SOLD, SERVICED OR FURNISHED UNDER THIS AGREEMENT OR IN CONNECTION HEREWITH. SCHNEIDER ELECTRIC DISCLAIMS ALL IMPLIED WARRANTIES OF MERCHANTABILITY, SATISFACTION AND FITNESS FOR A PARTICULAR PURPOSE. SCHNEIDER ELECTRIC EXPRESS WARRANTIES WILL NOT BE ENLARGED, DIMINISHED, OR AFFECTED BY AND NO OBLIGATION OR LIABILITY WILL ARISE OUT OF, SCHNEIDER ELECTRIC RENDERING OF TECHNICAL OR OTHER ADVICE OR SERVICE IN CONNECTION WITH THE PRODUCTS. THE FOREGOING WARRANTIES AND REMEDIES ARE EXCLUSIVE AND IN LIEU OF ALL OTHER WARRANTIES AND REMEDIES. THE WARRANTIES SET FORTH ABOVE CONSTITUTE SCHNEIDER ELECTRIC SOLE LIABILITY AND PURCHASER'S EXCLUSIVE REMEDY FOR ANY BREACH OF SUCH WARRANTIES. SCHNEIDER ELECTRIC WARRANTIES RUN ONLY TO PURCHASER AND ARE NOT EXTENDED TO ANY THIRD PARTIES.

IN NO EVENT SHALL SCHNEIDER ELECTRIC, ITS OFFICERS, DIRECTORS, AFFILIATES OR EMPLOYEES BE LIABLE FOR ANY FORM OF INDIRECT, SPECIAL, CONSEQUENTIAL OR PUNITIVE DAMAGES, ARISING OUT OF THE USE, SERVICE OR INSTALLATION, OF THE PRODUCTS, WHETHER SUCH DAMAGES ARISE IN CONTRACT OR TORT, IRRESPECTIVE OF FAULT, NEGLIGENCE OR STRICT LIABILITY OR WHETHER SCHNEIDER ELECTRIC HAS BEEN ADVISED IN ADVANCE OF THE POSSIBILITY OF SUCH DAMAGES, SPECIFICALLY, SCHNEIDER ELECTRIC IS NOT LIABLE FOR ANY COSTS, SUCH AS LOST PROFITS OR REVENUE, LOSS OF EQUIPMENT, LOSS OF USE OF EQUIPMENT, LOSS OF SOFTWARE, LOSS OF DATA, COSTS OF SUBSTITUANTS, CLAIMS BY THIRD PARTIES, OR OTHERWISE.

NO SALESMAN, EMPLOYEE OR AGENT OF SCHNEIDER ELECTRIC IS AUTHORIZED TO ADD TO OR VARY THE TERMS OF THIS WARRANTY. WARRANTY TERMS MAY BE MODIFIED, IF AT ALL, ONLY IN WRITING SIGNED BY AN SCHNEIDER ELECTRIC OFFICER AND LEGAL DEPARTMENT.

Warranty Claims

Customers with warranty claims issues may access the SCHNEIDER ELECTRIC worldwide customer support network through the SCHNEIDER ELECTRIC web site: *http://www.schneider-electric.com*. Select your country from the country selection pull-down menu. Open the Support tab at the top of the web page to obtain contact information for customer support in your region.

Schneider Electric
35 rue Joseph Monier
92500 Rueil Malmason
France

+ 33 (0) 1 41 29 70 00

www.schneider-electric.com

As standards, specifications, and design change from time to time, please ask for confirmation of the information given in this publication.

990–4309D–001