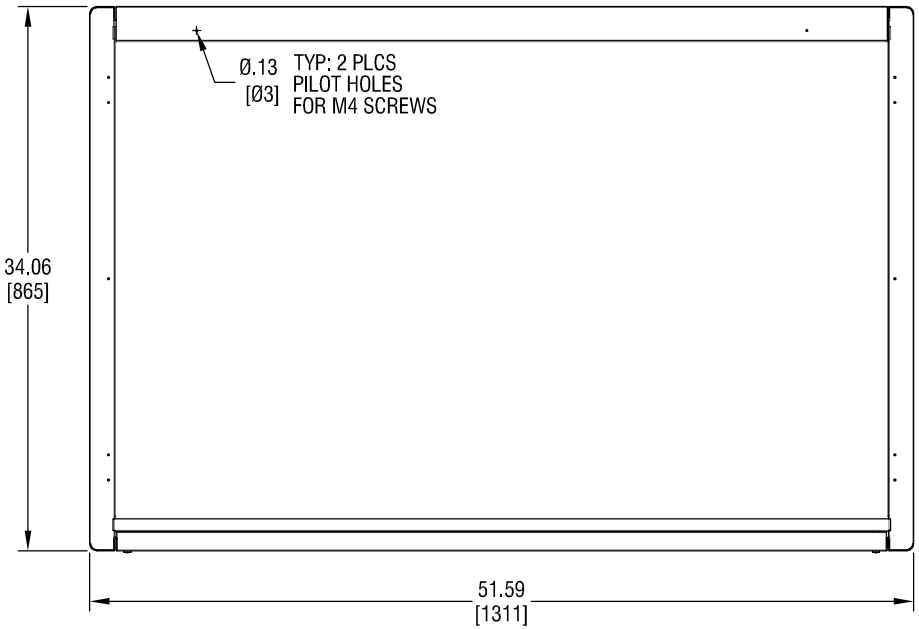


TOP VIEW

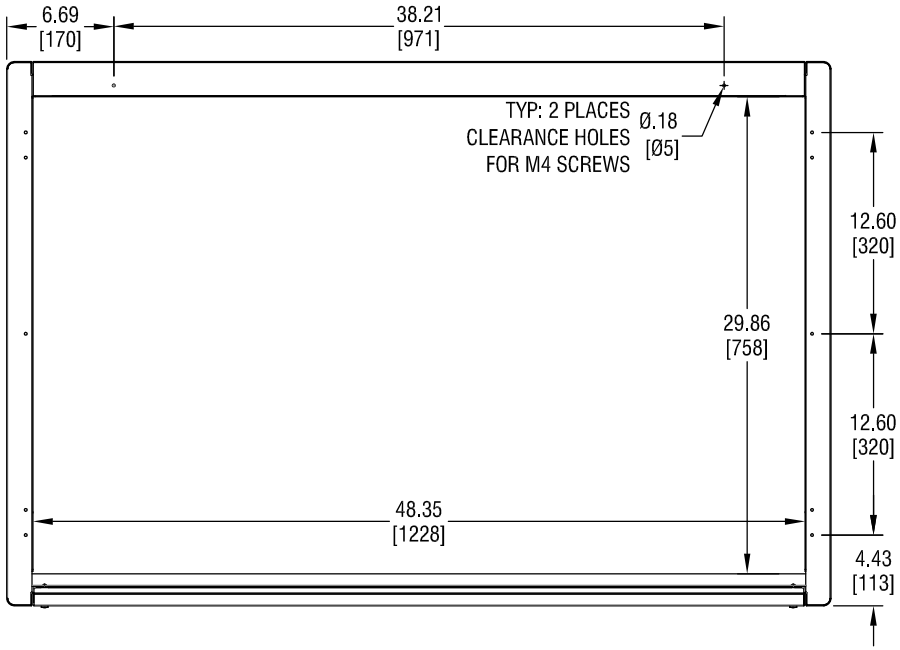


BOTTOM VIEW

| 12" STACKABLE PLENUMS, FRAME 4 SKUs | | | |
|---|---|---|---|
| SKU | COLOR | PLENUM WEIGHT | |
| | | LBS | KG |
| ACPL75154 | UNIFLAIR BLUE | 50.70 | 23 |
| ACPL75155 | SCHNEIDER WHITE | | |
| ACPL75156 | DATA CENTER GRAY | | |
| ACPL75157 | RAVEN BLACK | | |

## NOTES:

1. INSTALLATION SHALL COMPLY WITH ALL APPLICABLE NATIONAL AND LOCAL CODES.
2. SEE PRODUCT DOCUMENTATION FOR ADDITIONAL INFORMATION.
3. UNLESS OTHERWISE SPECIFIED, ALL DIMENSIONS ARE IN INCHES [MILLIMETERS].
4. △ MOUNTING HOLES MAY BE USED FOR SECURING PLENUM TO UNIT AND ANY DUCTWORK.
5. UP TO FOUR (4) PLENUMS MAY BE STACKED TOGETHER ON THE COOLING UNIT.
6. IF GRAVITY OR MOTORIZED DAMPERS ARE USED, THEY SHALL BE MOUNTED ON THE TOP OF THE LAST PLENUM USED DUE TO THE CENTERING TAB OF THE STACKABLE PLENUM. ANY ADDITIONAL WIRING LENGTH SHALL BE FIELD SUPPLIED.

THIS DRAWING AND SPECIFICATIONS HEREIN ARE THE PROPERTY OF SCHNEIDER ELECTRIC AND SHALL NOT BE COPIED, REPRODUCED OR USED IN WHOLE OR IN PART, AS THE BASIS FOR THE MANUFACTURE OR SALE OF ITEMS WITHOUT WRITTEN PERMISSION FROM SCHNEIDER ELECTRIC. THIS DRAWING IS BASED UPON LATEST AVAILABLE INFORMATION AND IS SUBJECT TO CHANGE WITHOUT NOTICE.

Schneider Electric

| | | | |
|---|---|---|---|
| TITLE: | UNIFLAIR 12" STACKABLE PLENUMS FRAME 4 TOP AND BOTTOM VIEW | DWG NO: | ACPL751XXFR4S |
| | | REV. | 0 |
| DRAWN BY: | M CRAVEN | 16-JUN-14 | 3RD ANGLE PROJ |
| ENGINEER: | T PRICOLO/K BAER | 16-JUN-14 | |
| APPROVED BY: | C CUMMISKY | 16-JUN-14 | |
| PROJECT: | DRAWINGS | SHEET 1 OF 3 | |

FRONT VIEW

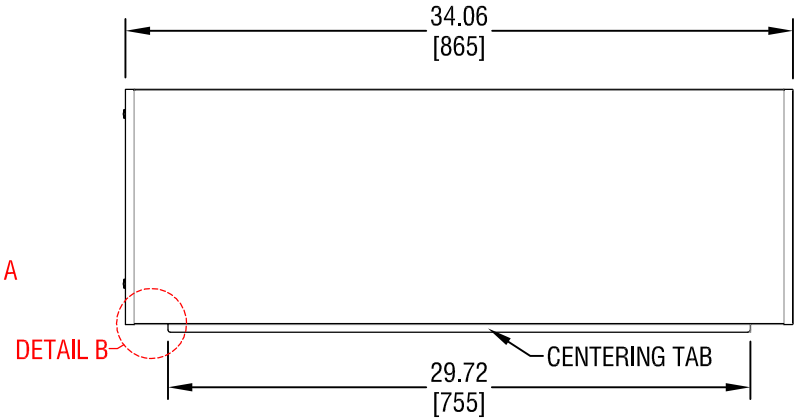


SIDE VIEW

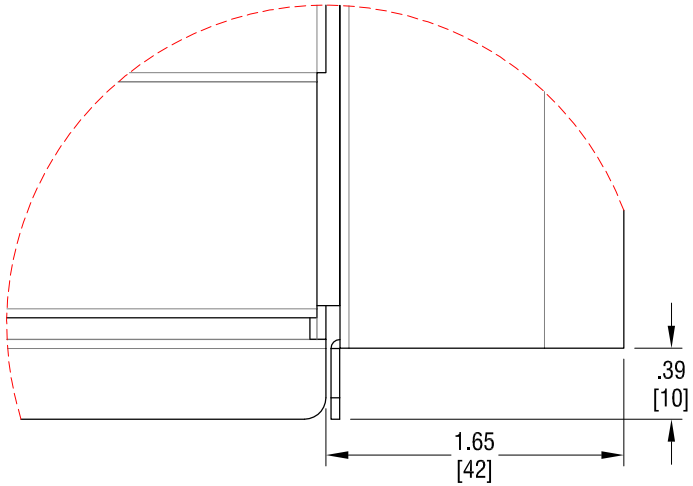


DETAIL A

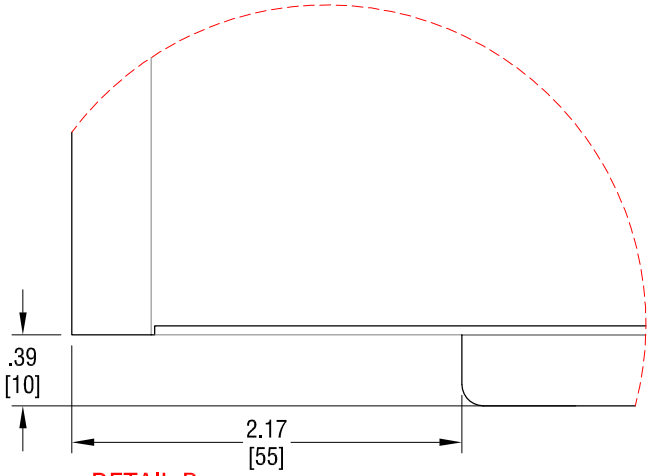


DETAIL B

## NOTES:

1. INSTALLATION SHALL COMPLY WITH ALL APPLICABLE NATIONAL AND LOCAL CODES.
2. SEE PRODUCT DOCUMENTATION FOR ADDITIONAL INFORMATION.
3. UNLESS OTHERWISE SPECIFIED, ALL DIMENSIONS ARE IN INCHES [MILLIMETERS].

THIS DRAWING AND SPECIFICATIONS HEREIN ARE THE PROPERTY OF SCHNEIDER ELECTRIC AND SHALL NOT BE COPIED, REPRODUCED OR USED IN WHOLE OR IN PART, AS THE BASIS FOR THE MANUFACTURE OR SALE OF ITEMS WITHOUT WRITTEN PERMISSION FROM SCHNEIDER ELECTRIC. THIS DRAWING IS BASED UPON LATEST AVAILABLE INFORMATION AND IS SUBJECT TO CHANGE WITHOUT NOTICE.

Schneider Electric

| | | | |
|---|---|---|---|
| TITLE: | UNIFLAIR 12" STACKABLE PLENUMS FRAME 4 PLENUM APPLICATION | DWG NO: | ACPL751XXFR4S |
| | | REV. | 0 |
| DRAWN BY: | M CRAVEN | 16-JUN-14 | 3RD ANGLE PROJ |
| ENGINEER: | T PRICOLO/K BAER | 16-JUN-14 | |
| APPROVED BY: | C CUMMISKY | 16-JUN-14 | |
| PROJECT: | DRAWINGS | SHEET 2 OF 3 | |

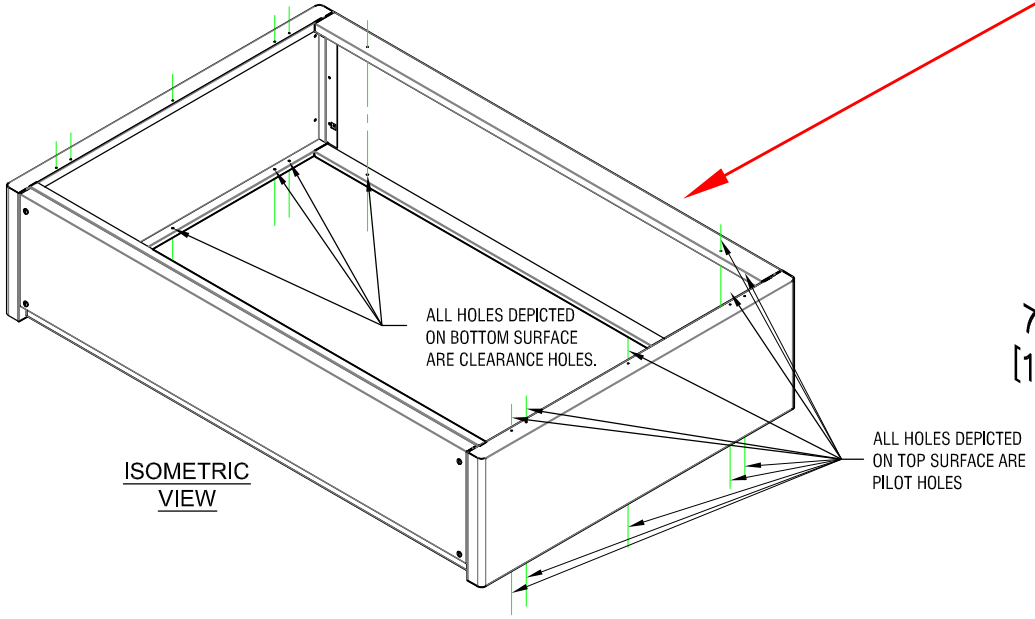


ISOMETRIC VIEW

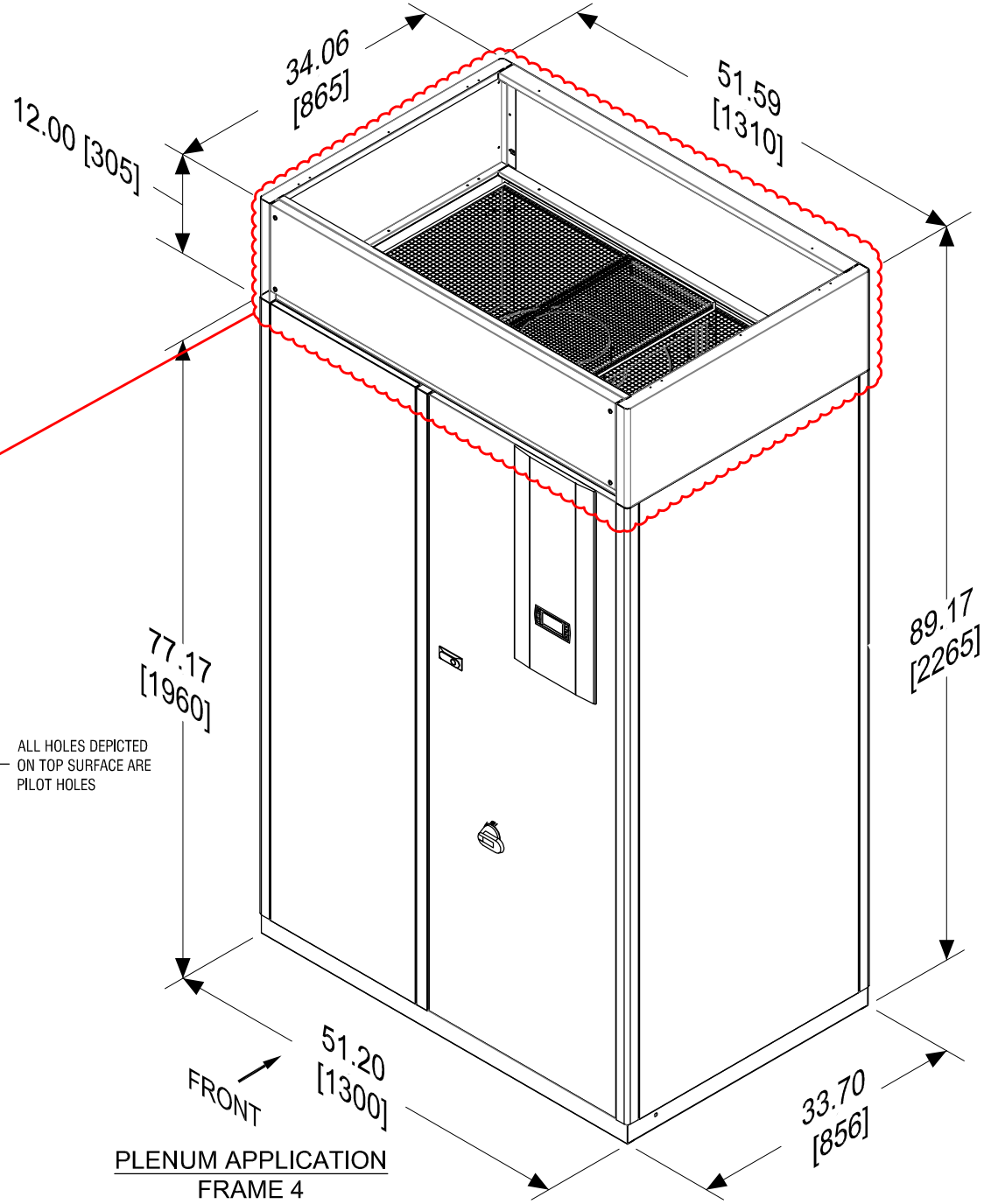


PLENUM APPLICATION
FRAME 4

| ITEM | INCHES | MILLIMETERS |
|---|---|---|
| COOLING UNIT BASE HEIGHT | 77.17 | 1960 |
| WITH (1) ONE PLENUM | 89.17 | 2265 |
| WITH (2) TWO PLENUMS | 101.17 | 2570 |
| WITH (3) THREE PLENUMS | 113.17 | 2875 |
| WITH (4) FOUR PLENUMS | 125.17 | 3180 |

NOTES:

1. INSTALLATION SHALL COMPLY WITH ALL APPLICABLE NATIONAL AND LOCAL CODES.

THIS DRAWING AND SPECIFICATIONS HEREIN ARE THE PROPERTY OF SCHNEIDER ELECTRIC AND SHALL NOT BE COPIED, REPRODUCED OR USED IN WHOLE OR IN PART, AS THE BASIS FOR THE MANUFACTURE OR SALE OF ITEMS WITHOUT WRITTEN PERMISSION FROM SCHNEIDER ELECTRIC. THIS DRAWING IS BASED UPON LATEST AVAILABLE INFORMATION AND IS SUBJECT TO CHANGE WITHOUT NOTICE.

Schneider Electric

| | | | |
|---|---|---|---|
| TITLE: | UNIFLAIR 12" STACKABLE PLENUMS FRAME 4 PLENUM APPLICATION | DWG NO: | ACPL751XXFR4S |
| | | REV. | 0 |
| DRAWN BY: | M CRAVEN | 16-JUN-14 | 3RD ANGLE PROJ |
| ENGINEER: | T PRICOLO/K BAER | 16-JUN-14 | |
| PROJECT: | DRAWINGS | SHEET 3 OF 3 | |
| APPROVED BY: | C CUMMISKY | 16-JUN-14 | |