WIRE BENDING SPACE IS BASED UPON THE MAXINUM
WIRE SIZE OF THE TERMINAL, AND NEC ARTICLE 430-10.

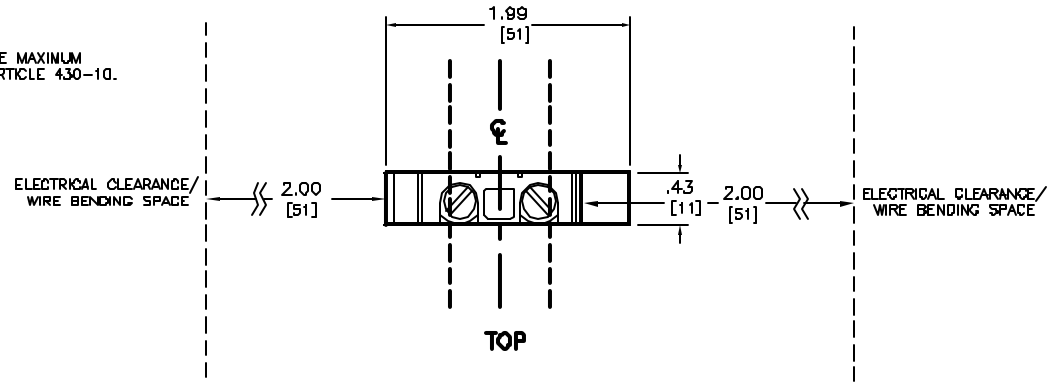

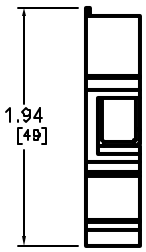

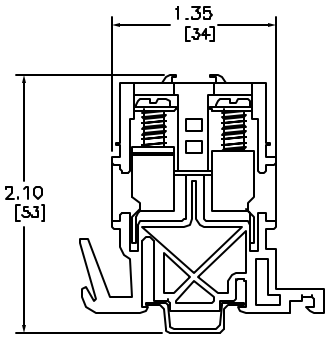

Catalog Number: 9080-GC6
Ratings: 600V, 85A
UL File/CCN: E60816/XCFR2
CSA File/Class: LR62144/6228 01
Meets Standards: –
Weight: 0.04 lbs.
Wire Size: #18–#4 AWG
Terminal torque: 32–35 lb./in.
Mounting Hwd.: TERMINAL MOUNTING CHANNEL, 35mm DIN RAIL

DUAL DIMENSIONS: INCHES
MILLIMETERS

TERMINAL BLOCKS (TYPE G) (NEMA)
CLASS 9080 TYPE GC6

SQUARE D
Schneider Electric

DWG# NO. E0801601-01

JUNE 2003