Symmetra PX 500kW 4 wire Single Mains Top Entry 2 MOD with Line-up Modular Battery

Sheet No.	Component /Detail	Description
1	Drawing Guide	Symmetra PX 500kW 4 wire Single Mains Top Entry 2 MOD with Line-up Modular Battery Drawing Guide
2	Solution Isometric	Symmetra PX 500kW 4 wire Single Mains Top Entry 2 MOD with Line-up Modular Battery Solution Isometric
3	Run time Details	Symmetra PX 500kW 4 wire Single Mains Top Entry 2 MOD with Line-up Modular Battery Runtime Details
4	Solution General Arrangements	Symmetra PX 500kW 4 wire Single Mains Top Entry 2 MOD with Line-up Modular Battery Solution General Arrangements
5	Solution Anchoring Details	Symmetra PX 500kW 4 wire Single Mains Top Entry 2 MOD with Line-up Modular Battery Solution Anchoring
6	UPS Frame Internal views	Symmetra PX 500kW UPS Internal Details
7-9	Input-Output Frame Internal views	Symmetra PX 500kW UPS Input Output Cabinet internal Details
10	Battery Frame Internal views	Symmetra PX Battery Cabinet Internal Views
11-12	System One Line Diagrams	Symmetra PX 500kW 4 wire Single Mains Top Entry 2 MOD with Line-up Modular Battery System One Line Diagrams
13	Site Planning data	Symmetra PX 500kW 4 wire Single Mains Top Entry 2 MOD with Line-up Modular Battery Site Planning data
14	System Wiring Diagram	Symmetra PX 500kW 4 wire Single Mains Top Entry 2 MOD with Line-up Modular Battery System Wiring Diagram

LEGEND

SYMBOL	DESCRIPTION
	CIRCUIT BREAKER
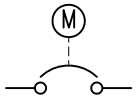	MOTORIZED CIRCUIT BREAKER
	SWITCH DISCONNECT
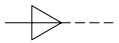	TERMINATION POINT
	FUSE
	TERMINAL

SYMBOL	DESCRIPTION
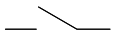	NORMALLY OPEN CONTACT
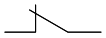	NORMALLY CLOSED CONTACT
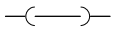	BUS BAR LINK
	STATIC SWITCH
	LAMP
	PROTECTIVE EARTHING

SYMBOL	DESCRIPTION
	CONVERTER
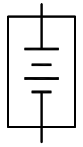	BATTERY MODULE
	INVERTER

THIS DRAWING AND SPECIFICATIONS HEREIN ARE THE PROPERTY OF SCHNEIDER ELECTRIC AND SHALL NOT BE COPIED, REPRODUCED OR USED IN WHOLE OR IN PART, AS THE BASIS FOR THE MANUFACTURE OR SALE OF ITEMS WITHOUT WRITTEN PERMISSION FROM SCHNEIDER ELECTRIC. THIS DRAWING IS BASED UPON LATEST AVAILABLE INFORMATION AND IS SUBJECT TO CHANGE WITHOUT NOTICE.

Schneider Electric

TITLE: SYMMETRA PX
Input: 480V AC 3PH SINGLE MAINS
Output: 480V AC 3PH 1000kW
TOP ENTRY 2 MOD W/ LINE-UP MODULAR BATTERY
DRAWING GUIDE

PROJECT: DRAWINGS | SHEET 1 OF 14

DWG NO: SY500K1000TG1C2-4W-LB | REV. 0

DRAWN BY:	RAMESH B	12-APR-12	ANGLE
ENGINEER:	M.LEPARD/A.WARNER	12-APR-12	PROJECTION
APPROVED BY:	B.SHERIDAN/E.SILVA	12-APR-12	N/A

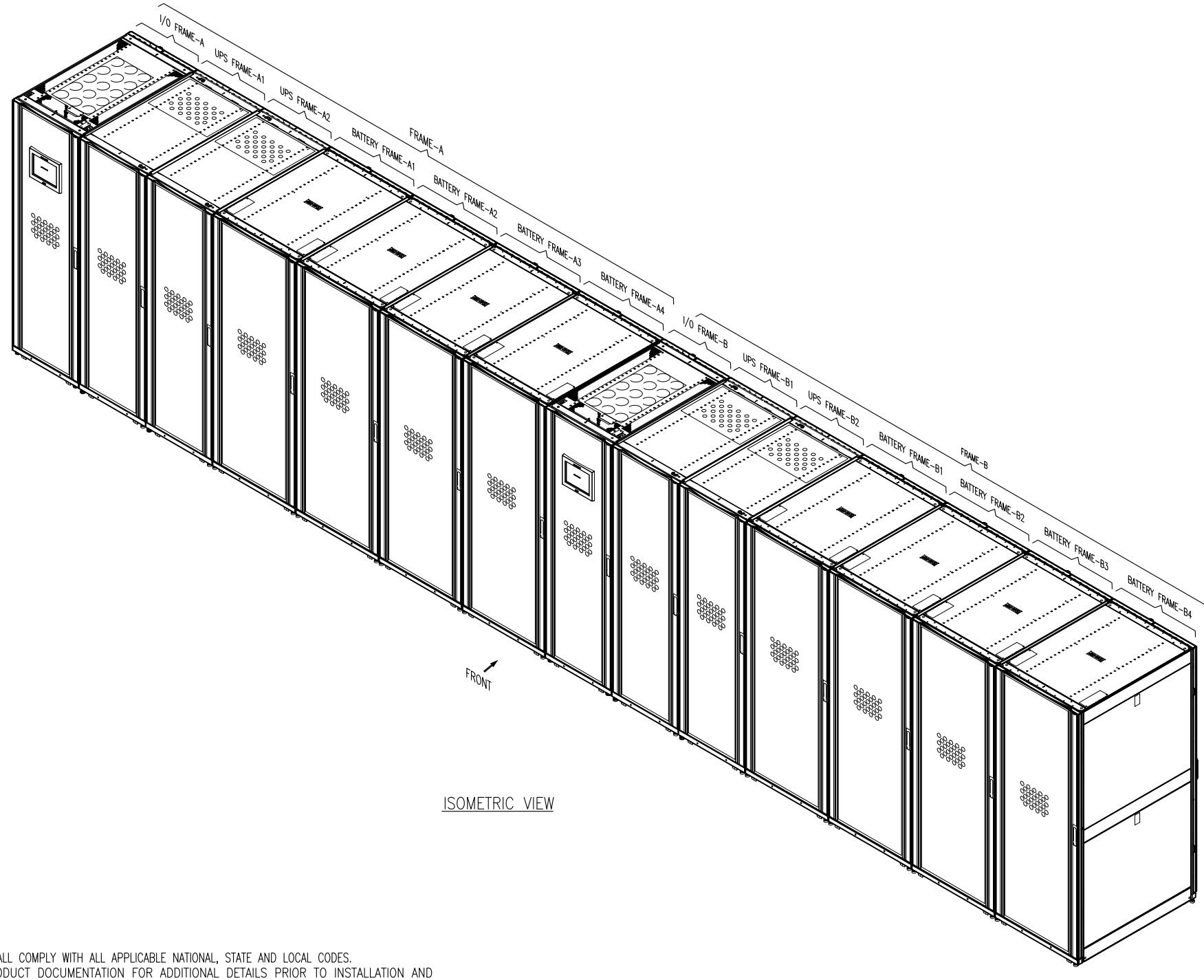

ISOMETRIC VIEW

NOTES:
1. INSTALLATION SHALL COMPLY WITH ALL APPLICABLE NATIONAL, STATE AND LOCAL CODES.
2. REFER TO PRODUCT DOCUMENTATION FOR ADDITIONAL DETAILS PRIOR TO INSTALLATION AND SITE PREPARATION WORK.
3. CABLE ENTRY IS FROM TOP OF THE UNIT.
4. FRONT SERVICE ACCESS IS REQUIRED.

THIS DRAWING AND SPECIFICATIONS HEREIN ARE THE PROPERTY OF SCHNEIDER ELECTRIC AND SHALL NOT BE COPIED, REPRODUCED OR USED IN WHOLE OR IN PART, AS THE BASIS FOR THE MANUFACTURE OR SALE OF ITEMS WITHOUT WRITTEN PERMISSION FROM SCHNEIDER ELECTRIC. THIS DRAWING IS BASED UPON LATEST AVAILABLE INFORMATION AND IS SUBJECT TO CHANGE WITHOUT NOTICE.

Schneider Electric

TITLE: SYMMETRA PX
Input: 480V AC 3PH SINGLE MAINS
Output: 480V AC 3PH 1000kW
TOP ENTRY 2 MOD W/ LINE-UP MODULAR BATTERY SOLUTION ISOMETRIC

PROJECT: DRAWINGS | SHEET 2 OF 14

DWG NO: SY500K1000TG1C2-4W-LB		REV. 2
DRAWN BY: JAYAPRAKASH	03-FEB-15	THIRD ANGLE PROJECTION
ENGINEER: D LOEWENSTEIN/P BOUCHER	03-FEB-15	
APPROVED BY: B SHERIDAN	03-FEB-15	

125 - 500kW TOP FEED SINGLE/DUAL MAINS 2MODULE WITH LINE-UP BATTERIES (6min to 105min)△5

UPS rating	Total No. of In-Out Frames	Total No. of Power Frames	Total No. of Power Modules	Battery details for various runtime options																													
				6 min		8 min		10 min		12 min		15 min		20 min		25 min		30 min		40 min		50min		60min		70min		80min		90min		100min		105min	
				Total No. of Battery Frames	Total No. of Battery Modules	Total No. of Battery Frames	Total No. of Battery Modules	Total No. of Battery Frames	Total No. of Battery Modules	Total No. of Battery Frames	Total No. of Battery Modules	Total No. of Battery Frames	Total No. of Battery Modules	Total No. of Battery Frames	Total No. of Battery Modules	Total No. of Battery Frames	Total No. of Battery Modules	Total No. of Battery Frames	Total No. of Battery Modules	Total No. of Battery Frames	Total No. of Battery Modules	Total No. of Battery Frames	Total No. of Battery Modules	Total No. of Battery Frames	Total No. of Battery Modules	Total No. of Battery Frames	Total No. of Battery Modules	Total No. of Battery Frames	Total No. of Battery Modules	Total No. of Battery Frames	Total No. of Battery Modules	Total No. of Battery Frames	Total No. of Battery Modules
2x(125kVA/125kW)	2	4	10	2	16	4	20	4	22	4	26	4	30	6	36	6	42	6	48	8	60	10	72	10	82	12	92	14	104	14	114	16	124	16	128
2x(250kVA/250kW)	2	4	20	4	32	6	38	6	44	8	50	8	58	10	70	12	84	12	96	16	118	N/A	N/A	N/A	N/A	N/A	N/A	N/A	N/A	N/A	N/A	N/A	N/A	N/A	N/A
2x(300kVA/300kW)	2	4	24	6	40	6	46	8	52	8	60	10	70	12	84	14	100	14	114	N/A	N/A	N/A	N/A	N/A	N/A	N/A	N/A	N/A	N/A	N/A	N/A	N/A	N/A	N/A	N/A
2x(400kVA/400kW)	2	4	32	8	52	10	62	10	70	10	80	12	94	14	114	N/A	N/A	N/A	N/A	N/A	N/A	N/A	N/A	N/A	N/A	N/A	N/A	N/A	N/A	N/A	N/A	N/A	N/A	N/A	N/A
2x(500kVA/500kW)	2	4	40	8	64	10	76	12	88	14	100	16	116	N/A	N/A	N/A	N/A	N/A	N/A	N/A	N/A	N/A	N/A	N/A	N/A	N/A	N/A	N/A	N/A	N/A	N/A	N/A	N/A	N/A	N/A

NOTES:
1. INSTALLATION SHALL COMPLY WITH ALL APPLICABLE NATIONAL, STATE AND LOCAL CODES.
2. REFER TO PRODUCT DOCUMENTATION FOR ADDITIONAL DETAILS PRIOR TO INSTALLATION AND SITE PREPARATION WORK.
3. FOR POWER LEVELS/CONFIGURATIONS NOT DETAILED PLEASE CONTACT CONFIGURATION ENGINEERING.
4. SOLUTION WEIGHT INCLUDES 500kW STATIC SWITCH.
△5. BATTERY RUN TIMES ARE THEORETICAL AND CALCULATED BASED ON DATA PROVIDED BY BATTERY MANUFACTURER ASSUMING OPTIMUM ENVIRONMENT AND LOAD CONDITIONS.

THIS DRAWING AND SPECIFICATIONS HEREIN ARE THE PROPERTY OF SCHNEIDER ELECTRIC AND SHALL NOT BE COPIED, REPRODUCED OR USED IN WHOLE OR IN PART, AS THE BASIS FOR THE MANUFACTURE OR SALE OF ITEMS WITHOUT WRITTEN PERMISSION FROM SCHNEIDER ELECTRIC. THIS DRAWING IS BASED UPON LATEST AVAILABLE INFORMATION AND IS SUBJECT TO CHANGE WITHOUT NOTICE.

Schneider Electric

TITLE: SYMMETRA PX
Input: 480V AC 3PH SINGLE MAINS
Output: 480V AC 3PH 1000kW
TOP ENTRY 2 MOD W/ LINE-UP MODULAR BATTERY
SOLUTION RUNTIME DETAILS

PROJECT: DRAWINGS | SHEET 3 OF 14

DWG NO: SY500K1000TG1C2-4W-LB | REV. 0

DRAWN BY:	RAMESH B	12-APR-12
ENGINEER:	M.LEPARD/A.WARNER	12-APR-12
APPROVED BY:	B.SHERIDAN/E.SILVA	12-APR-12

ANGLE PROJECTION N/A

NOTES:

1. INSTALLATION SHALL COMPLY WITH ALL APPLICABLE NATIONAL, STATE AND LOCAL CODES.
2. REFER TO PRODUCT DOCUMENTATION FOR ADDITIONAL DETAILS PRIOR TO INSTALLATION AND SITE PREPARATION WORK.
3. ALL DIMENSIONS ARE IN INCHES [MILLIMETERS].
4. WEIGHT PER FRAME (UNPOPULATED)

	LBS	KG
UPS FRAME	534.00	242.73
IN/OUT FRAME	730.00	332.00
BATTERY FRAME	373.60	822.00
500kW SSW	238.00	108.00

5. CABLE ENTRY IS FROM TOP OF THE UNIT.
6. ENCLOSURE PROTECTION CLASS : NEMA1, IP20.
7. FRONT SERVICE CLEARANCE AND TOP VENTILATION CLEARANCE REQUIRED AS SHOWN.
8. OPERATING TEMPERATURE : 0 to 40°C.
9. COLOR : BLACK
10. THIS INFORMATION PROVIDES APPROXIMATE CENTER OF GRAVITY CALCULATION.
11. REQUIREMENTS FOR BACK TO BACK SYMMETRA PX250/500 UPS INSTALLATIONS.
    - TO ENSURE PROPER AIR FLOW, YOU MUST INSTALL A PLEXIGLAS FRENCH DOOR KIT (0H-0242) AT THE REAR OF EACH POWER FRAME AND I/O FRAME IN ONE OF THE TWO SYSTEMS.
    - TO PREVENT BATTERIES FROM BEING OVERHEATED BY HOT AIR FROM POWER FRAMES, BATTERY FRAMES MUST BE INSTALLED BACK TO BACK AND POWER FRAMES MUST BE INSTALLED BACK TO BACK.

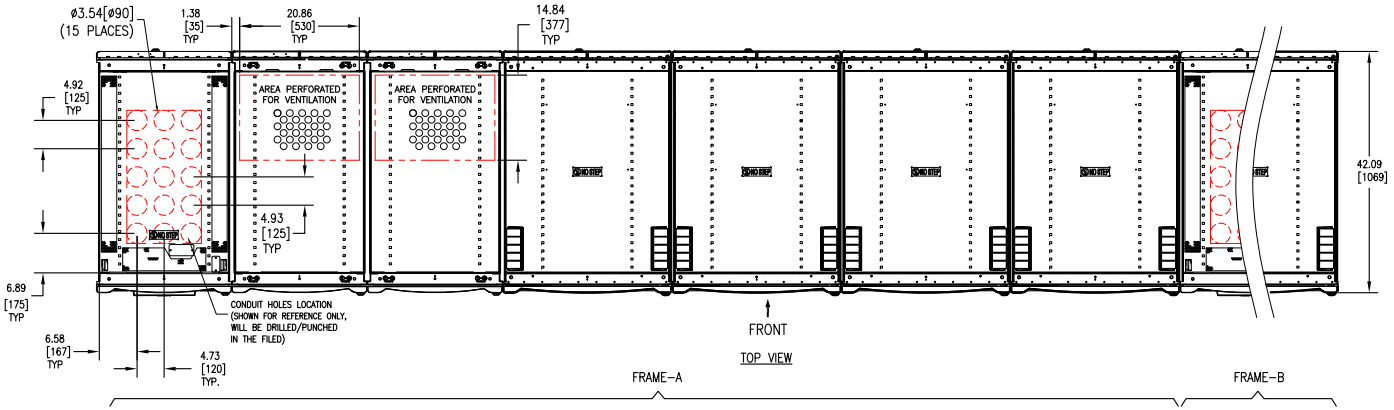

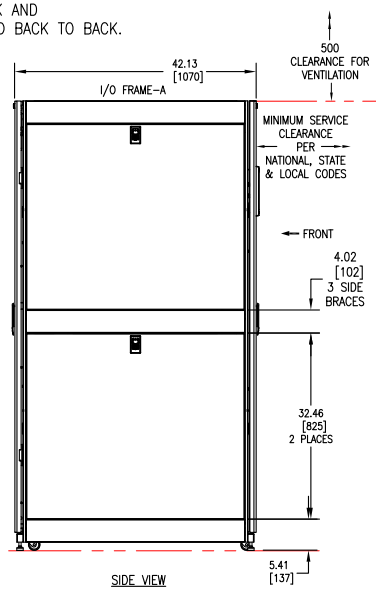

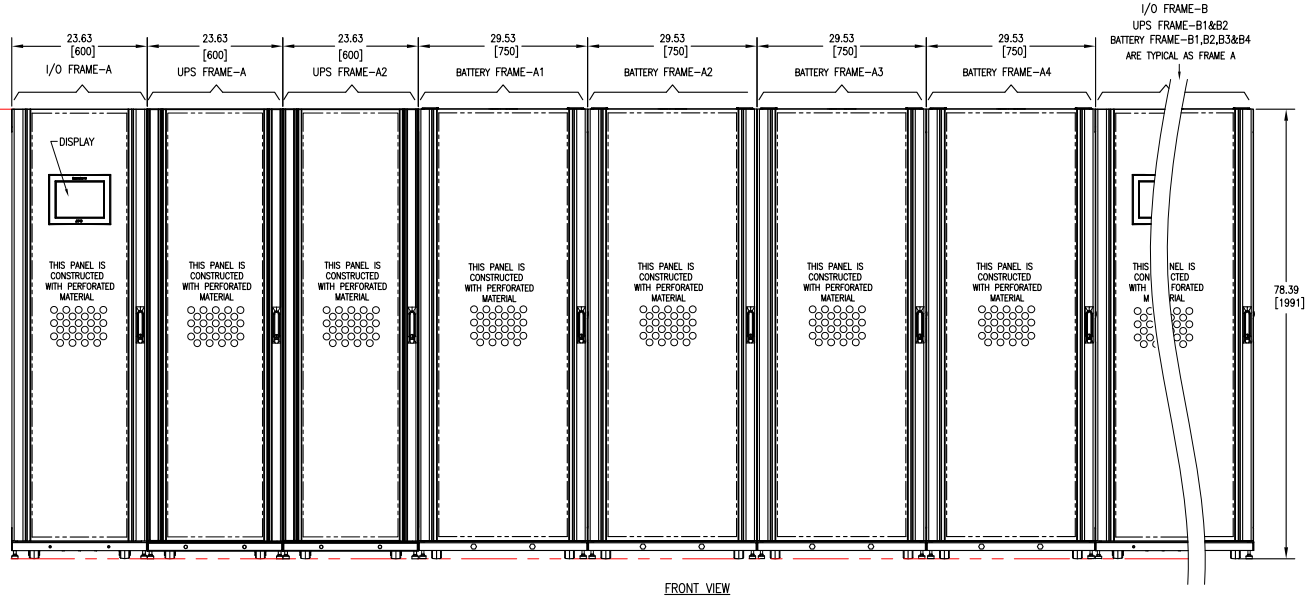

CENTER OF GRAVITY DETAILS △10
BATTERY FRAME/UPS FRAME/INPUT-OUTPUT FRAME
(REFER TO COG TABLE)

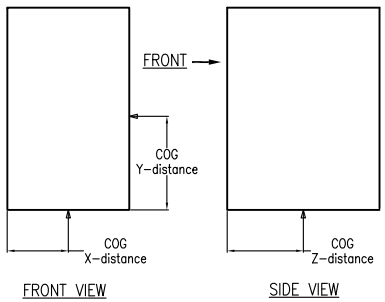

COG TABLE

CENTER OF GRAVITY	BATTERY FRAME	UPS FRAME	I/O FRAME
X - DISTANCE	14.76 [375]	12.85 [326.4]	12.96 [329.2]
Y - DISTANCE	39.17 [995]	42.14 [1070.3]	21 [533.5]
Z - DISTANCE	22.44 [570]	16.65 [423]	31.04 [788.5]

Floor Loading Data (Fully Populated unit)

Description	SKU Reference	Dimensions H x W x D Inch[mm]	Weight in LBS [Kg]	Floor Loading lbs/ sq. ft[kg / sq. m]
BATTERY FRAME	SYBFXR8-8	78.39x29.53x42.13 [1991x750x1070]	3510 [1595]	406 [1988]
UPS FRAME	SYPF250KD with 10 Power Modules	78.39x23.62x42.13 [1991x600x1070]	1484 [675]	215 [1051]
I/O FRAME	SYIOF500KD with 500kW Static Switch	78.39x23.54x42.13 [1991x598x1070]	968 [440]	141 [688]

THIS DRAWING AND SPECIFICATIONS HEREIN ARE THE PROPERTY OF SCHNEIDER ELECTRIC AND SHALL NOT BE COPIED, REPRODUCED OR USED IN WHOLE OR IN PART, AS THE BASIS FOR THE MANUFACTURE OR SALE OF ITEMS WITHOUT WRITTEN PERMISSION FROM SCHNEIDER ELECTRIC. THIS DRAWING IS BASED UPON LATEST AVAILABLE INFORMATION AND IS SUBJECT TO CHANGE WITHOUT NOTICE.

Schneider Electric

TITLE: SYMMETRA PX
Input: 480V AC 3PH SINGLE MAINS
Output: 480V AC 3PH 1000kW
TOP ENTRY 2 MOD W/ LINE-UP MODULAR BATTERY SOLUTION GENERAL ARRANGEMENT

PROJECT: DRAWINGS | SHEET 4 OF 14

DWG NO: SY500K1000TG1C2-4W-LB | REV. 2

DRAWN BY:	JAYAPRAKASH/BALA	26-FEB-16
ENGINEER:	M.LEPARD	26-FEB-16
APPROVED BY:	M.LEPARD	26-FEB-16

THIRD ANGLE PROJECTION

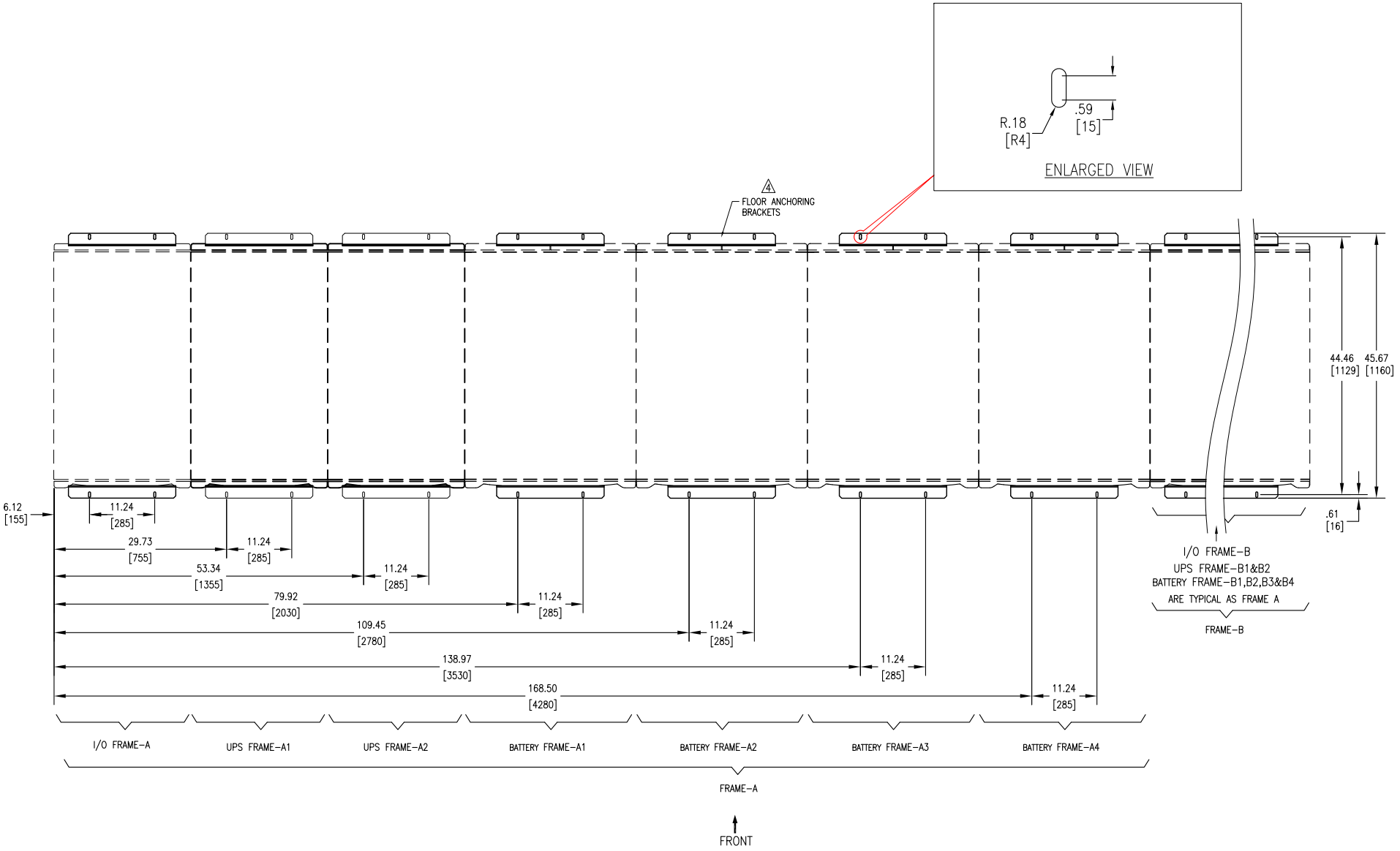

FLOOR ANCHORING DETAILS

NOTES:

1. INSTALLATION SHALL COMPLY WITH ALL APPLICABLE NATIONAL, STATE AND LOCAL CODES.
2. REFER TO PRODUCT DOCUMENTATION FOR ADDITIONAL DETAILS PRIOR TO INSTALLATION AND SITE PREPARATION WORK.
3. ALL DIMENSIONS ARE IN INCHES [MILLIMETERS].
4. △ FLOOR ANCHORING BRACKETS CAN BE USED TO ANCHOR ENCLOSURE. USE CODE COMPLIANT FASTENERS TO SECURE THE UNIT. IF REAR BRACKET IS USED. 29.92 [760mm} REAR CLEARANCE IS REQUIRED FOR INSTALLATION.

THIS DRAWING AND SPECIFICATIONS HEREIN ARE THE PROPERTY OF SCHNEIDER ELECTRIC AND SHALL NOT BE COPIED, REPRODUCED OR USED IN WHOLE OR IN PART, AS THE BASIS FOR THE MANUFACTURE OR SALE OF ITEMS WITHOUT WRITTEN PERMISSION FROM SCHNEIDER ELECTRIC. THIS DRAWING IS BASED UPON LATEST AVAILABLE INFORMATION AND IS SUBJECT TO CHANGE WITHOUT NOTICE.

Schneider Electric

TITLE: SYMMETRA PX
Input: 480V AC 3PH SINGLE MAINS
Output: 480V AC 3PH 1000kW
TOP ENTRY 2 MOD W/ LINE-UP MODULAR BATTERY SOLUTION ANCHORING

PROJECT: DRAWINGS | SHEET 5 OF 14

DWG NO: SY500K1000TG1C2-4W-LB			REV. 0
DRAWN BY:	RAMESH B	12-APR-12	THIRD ANGLE PROJECTION
ENGINEER:	M.LEPARD/A.WARNER	12-APR-12	
APPROVED BY:	B.SHERIDAN/E.SILVA	12-APR-12	

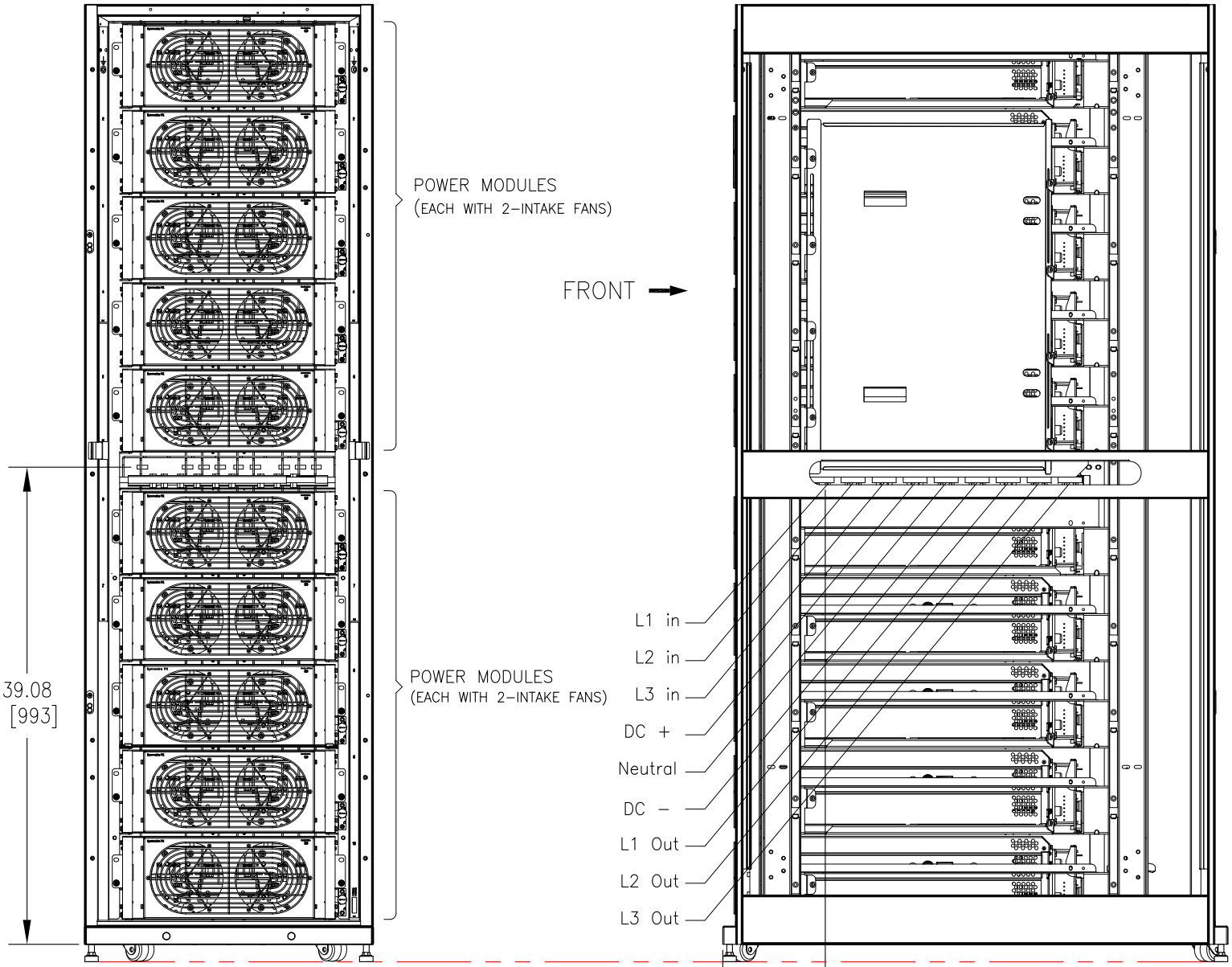

NOTES:

1. INSTALLATION SHALL COMPLY WITH ALL APPLICABLE NATIONAL, STATE AND LOCAL CODES.
2. REFER TO PRODUCT DOCUMENTATION FOR ADDITIONAL DETAILS PRIOR TO INSTALLATION AND SITE PREPARATION WORK.
3. ALL DIMENSIONS ARE IN INCHES [MILLIMETERS].
4. SOME STRUCTURAL DETAILS HAVE BEEN OMITTED FOR THE PURPOSE OF CLARITY.
5. EITHER 600mm OR 29.92 [750mm] WIDE PLENUM WILL BE SUPPLIED AS PER RACK CONFIGURATION.

THIS DRAWING AND SPECIFICATIONS HEREIN ARE THE PROPERTY OF SCHNEIDER ELECTRIC AND SHALL NOT BE COPIED, REPRODUCED OR USED IN WHOLE OR IN PART, AS THE BASIS FOR THE MANUFACTURE OR SALE OF ITEMS WITHOUT WRITTEN PERMISSION FROM SCHNEIDER ELECTRIC. THIS DRAWING IS BASED UPON LATEST AVAILABLE INFORMATION AND IS SUBJECT TO CHANGE WITHOUT NOTICE.

Schneider Electric

TITLE: SYMMETRA PX
Input: 480V AC 3PH SINGLE MAINS
Output: 480V AC 3PH 1000kW
TOP ENTRY 2 MOD W/ LINE-UP MODULAR BATTERY
UPS POWER FRAME INTERNAL VIEW

PROJECT: DRAWINGS SHEET 6 OF 14

DWG NO: SY500K1000TG1C2-4W-LB REV. 0

DRAWN BY:	RAMESH B	12-APR-12
ENGINEER:	M.LEPARD/A.WARNER	12-APR-12
APPROVED BY:	B.SHERIDAN/E.SILVA	12-APR-12

THIRD ANGLE PROJECTION

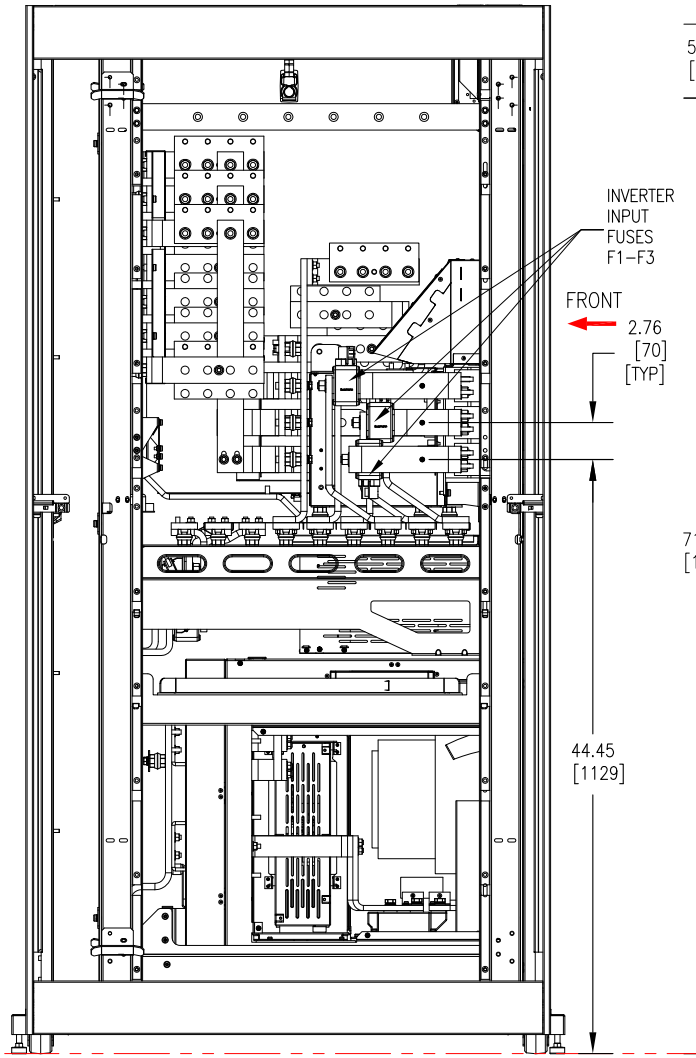

LEFT SIDE VIEW
(SIDE COVERS REMOVED)

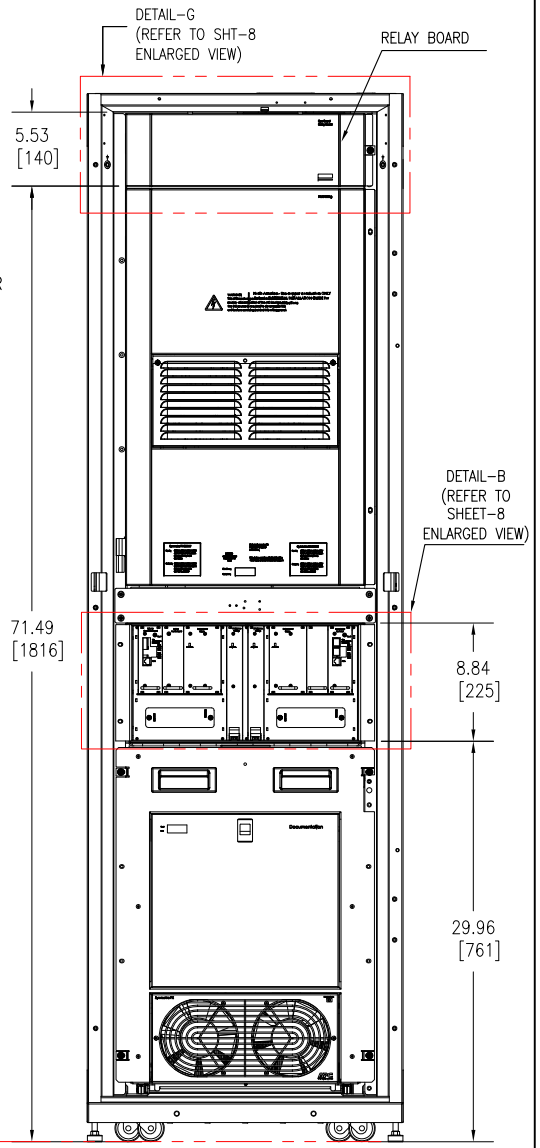

FRONT VIEW
(DOOR REMOVED)

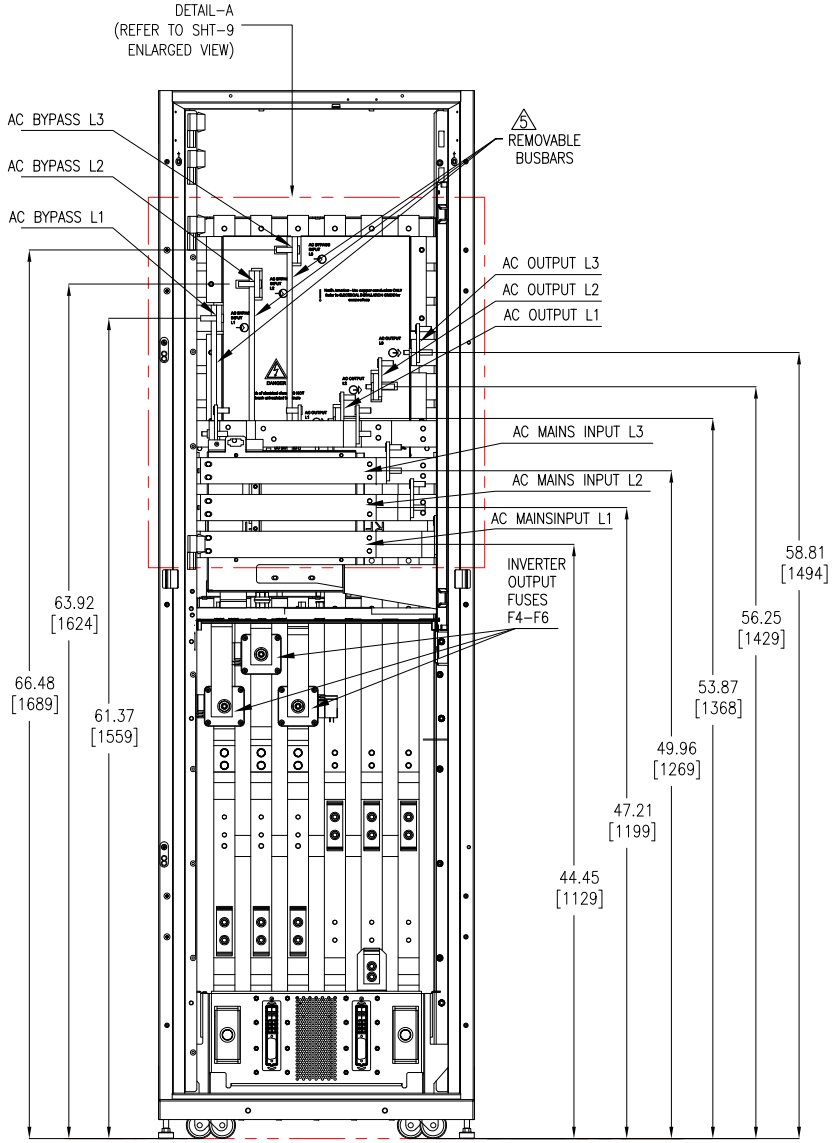

FRONT VIEW
(DOOR & SSW REMOVED)

NOTES:

1. INSTALLATION SHALL COMPLY WITH ALL APPLICABLE NATIONAL, STATE AND LOCAL CODES.
2. REFER TO PRODUCT DOCUMENTATION FOR ADDITIONAL DETAILS PRIOR TO INSTALLATION AND SITE PREPARATION WORK.
3. ALL DIMENSIONS ARE IN INCHES[MILLIMETERS].
4. SOME STRUCTURAL DETAILS HAVE BEEN OMITTED FOR CLARITY.
△5. SINGLE MAINS IS FACTORY DEFAULT CONFIGURATION. THE BUS BAR LINKS MUST BE PRESENT FOR SINGLE MAINS INSTALLATION.

THIS DRAWING AND SPECIFICATIONS HEREIN ARE THE PROPERTY OF SCHNEIDER ELECTRIC AND SHALL NOT BE COPIED, REPRODUCED OR USED IN WHOLE OR IN PART, AS THE BASIS FOR THE MANUFACTURE OR SALE OF ITEMS WITHOUT WRITTEN PERMISSION FROM SCHNEIDER ELECTRIC. THIS DRAWING IS BASED UPON LATEST AVAILABLE INFORMATION AND IS SUBJECT TO CHANGE WITHOUT NOTICE.

Schneider Electric

TITLE: SYMMETRA PX
Input: 480V AC 3PH SINGLE MAINS
Output: 480V AC 3PH 1000kW
TOP ENTRY 2 MOD W/ LINE-UP MODULAR BATTERY
UPS INPUT- OUTPUT FRAME INTERNAL VIEW

PROJECT: DRAWINGS | SHEET 7 OF 14

DWG NO:	SY500K1000TG1C2-4W-LB		REV. 1
DRAWN BY:	BALAMURUGAN	11-FEB-13	THIRD
ENGINEER:	M.LEPARD/A.WARNER	11-FEB-13	ANGLE
APPROVED BY:	B.SHERIDAN/E.SILVA	11-FEB-13	PROJECTION

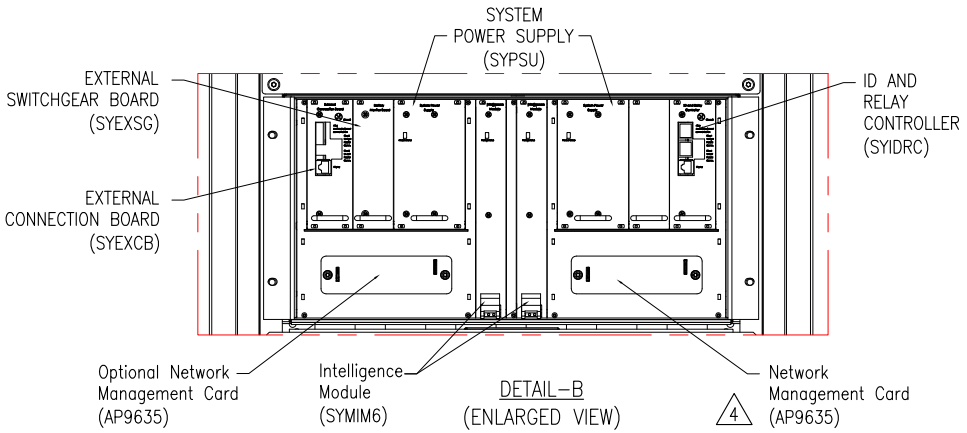

DETAIL–B
(ENLARGED VIEW)

DETAIL–K (ENLARGED VIEW)

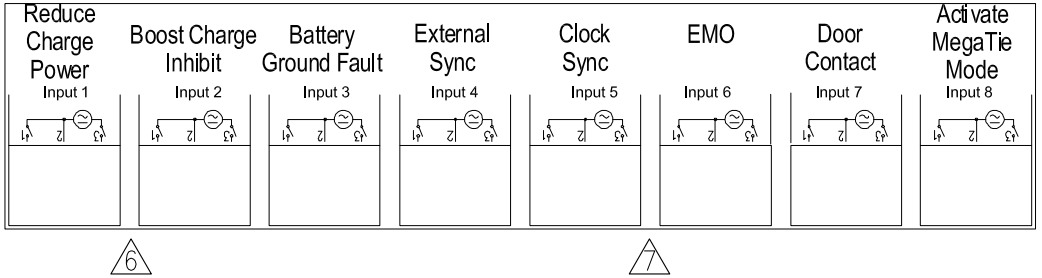

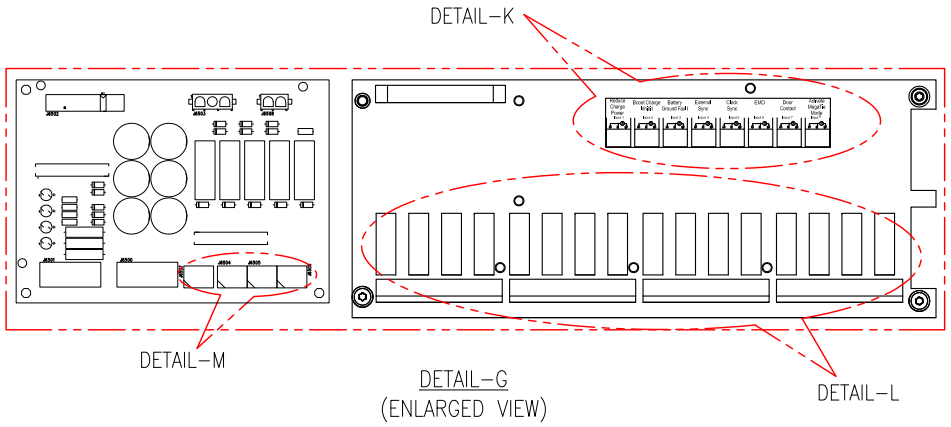

DETAIL–G
(ENLARGED VIEW)

DETAIL–M (EPO– EMERGENCY POWER OFF CONNECTIONS)

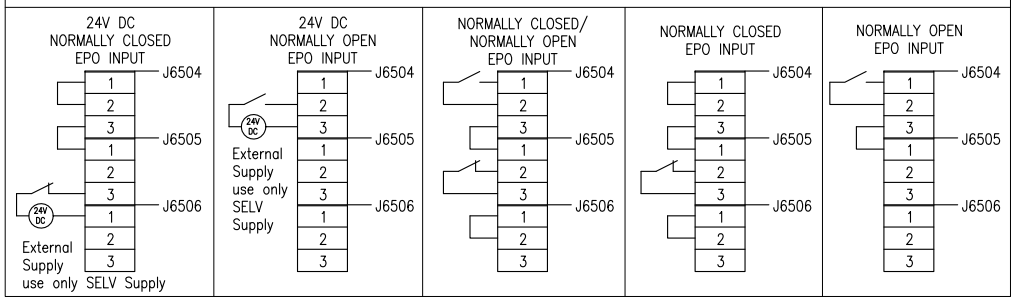

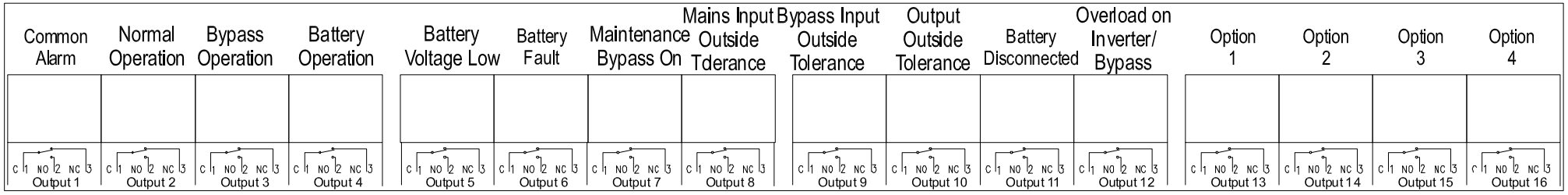

DETAIL–L (ENLARGED VIEW)

NOTES:
1. INSTALLATION SHALL COMPLY WITH ALL APPLICABLE NATIONAL, STATE AND LOCAL CODES.
2. REFER TO PRODUCT DOCUMENTATION FOR ADDITIONAL DETAILS PRIOR TO INSTALLATION AND SITE PREPARATION WORK.
3. OUTPUT RELAYS SPECIFICATION–MAXIMUM CURRENT ACCEPTED BY EACH OUTPUT RELAY IS 7.2A/250VAC.
△4. ONLY ONE NMC (NETWORK MANAGEMENT CARD) IS INSTALLED AS STANDARD, THE OTHER NMC IS OPTIONAL.
5. INPUT RELAYS SPECIFICATION–MINIMUM 12VAC/DC, MAX. 28VAC/40VDC, ALL INPUTS MUST BE FROM THE SAME SOURCE.
△6. PLACE A JUMPER OR CONTROL SIGNAL BETWEEN PIN 1&2, IF EXTERNAL SYNCHRONIZATION FEATURE IS USED.
△7. INPUT 5 AND 6 ARE RESERVED FOR FUTURE USE.
8. ALL WIRING TO THE RELAY BOARD SHOULD BE CONSIDERED AS FIELD WIRING RATED MINIMUM 480V AC, AND MUST USE COPPER CONDUCTORS ONLY.

THIS DRAWING AND SPECIFICATIONS HEREIN ARE THE PROPERTY OF SCHNEIDER ELECTRIC AND SHALL NOT BE COPIED, REPRODUCED OR USED IN WHOLE OR IN PART, AS THE BASIS FOR THE MANUFACTURE OR SALE OF ITEMS WITHOUT WRITTEN PERMISSION FROM SCHNEIDER ELECTRIC. THIS DRAWING IS BASED UPON LATEST AVAILABLE INFORMATION AND IS SUBJECT TO CHANGE WITHOUT NOTICE.

Schneider Electric

TITLE: SYMMETRA PX
Input: 480V AC 3PH SINGLE MAINS
Output: 480V AC 3PH 1000kW
TOP ENTRY 2 MOD W/ LINE-UP MODULAR BATTERY
UPS INPUT- OUTPUT FRAME INTERNAL DETAILS

PROJECT: DRAWINGS | SHEET 8 OF 14

DWG NO:	SY500K1000TG1C2-4W-LB		REV. 3
DRAWN BY:	JAYAPRAKASH	05-FEB-16	THIRD ANGLE PROJECTION
ENGINEER:	A.WARNER	05-FEB-16	
APPROVED BY:	B.SHERIDAN	05-FEB-16	

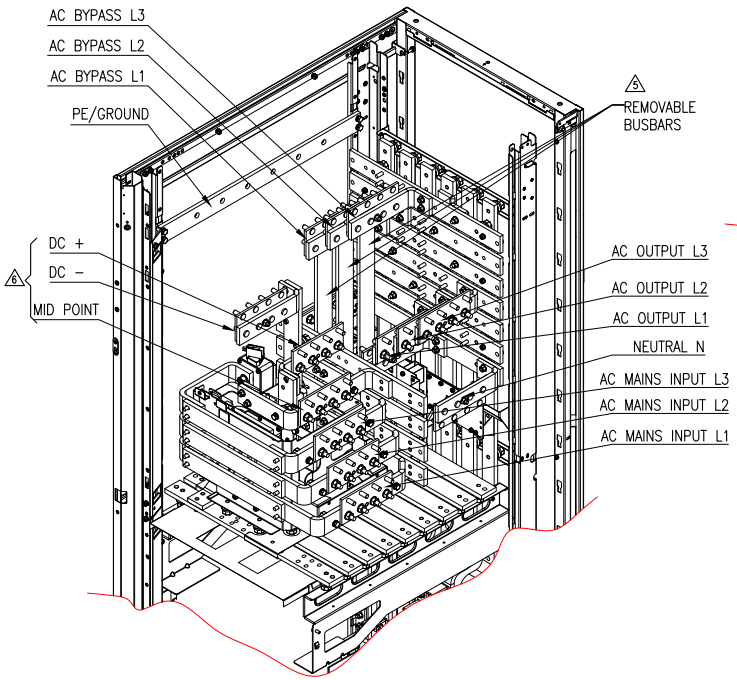

DETAIL–A (ISOMETRIC VIEW)
BUSBARS WITH NEMA PLATES

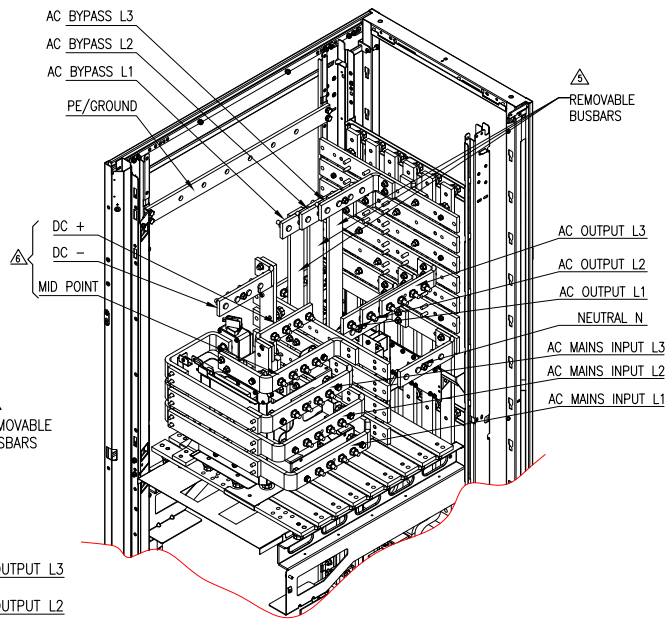

DETAIL–A (ISOMETRIC VIEW)
WITH NORMAL BUSBARS

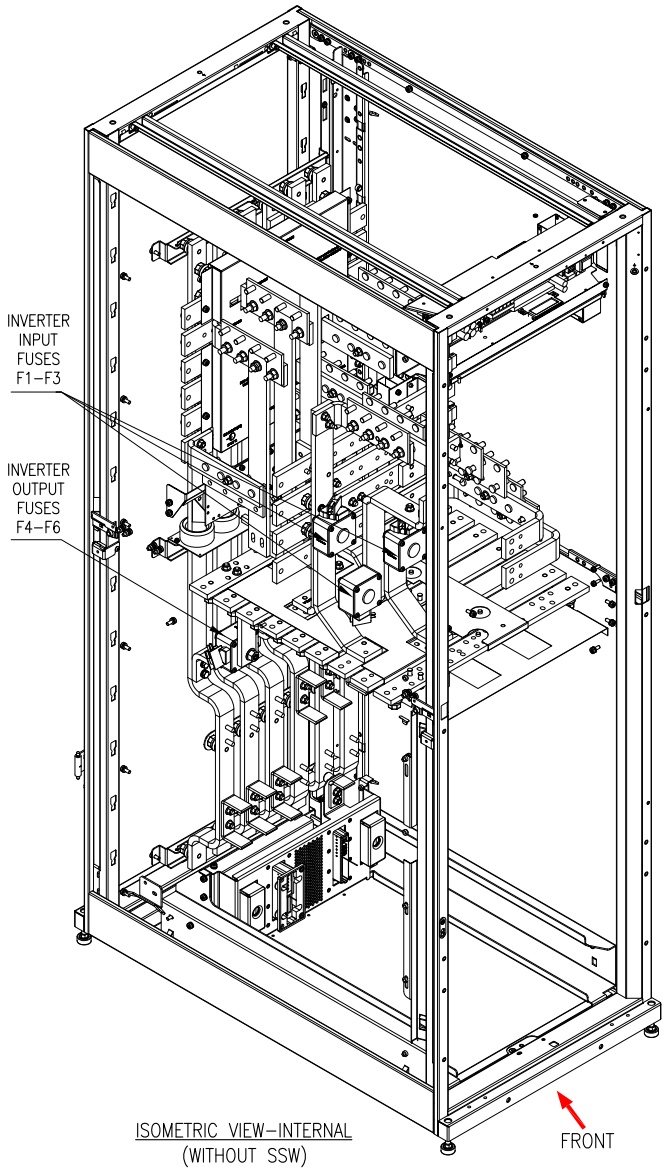

ISOMETRIC VIEW–INTERNAL
(WITHOUT SSW)

NOTES:
1. INSTALLATION SHALL COMPLY WITH ALL APPLICABLE NATIONAL, STATE AND LOCAL CODES.
2. REFER TO PRODUCT DOCUMENTATION FOR ADDITIONAL DETAILS PRIOR TO INSTALLATION AND SITE PREPARATION WORK.
3. SOME STRUCTURAL DETAILS HAVE BEEN OMITTED FOR THE PURPOSE OF CLARITY.
4. ALL DIMENSIONS ARE IN INCHES[MILLIMETERS].
△5. SINGLE MAINS IS FACTORY DEFAULT CONFIGURATION. THE BUS BAR LINKS MUST BE PRESENT FOR SINGLE MAINS INSTALLATION.
△6. NOT REQUIRED FOR LINE UP & MATCH BATTERY SOLUTION. ONLY USED FOR REMOTE XR BATTERY FRAMES OR FOR THIRD PARTY BATTERY SOLUTIONS.

THIS DRAWING AND SPECIFICATIONS HEREIN ARE THE PROPERTY OF SCHNEIDER ELECTRIC AND SHALL NOT BE COPIED, REPRODUCED OR USED IN WHOLE OR IN PART, AS THE BASIS FOR THE MANUFACTURE OR SALE OF ITEMS WITHOUT WRITTEN PERMISSION FROM SCHNEIDER ELECTRIC. THIS DRAWING IS BASED UPON LATEST AVAILABLE INFORMATION AND IS SUBJECT TO CHANGE WITHOUT NOTICE.

Schneider Electric

TITLE: SYMMETRA PX
Input: 480V AC 3PH SINGLE MAINS
Output: 480V AC 3PH 1000kW
TOP ENTRY 2 MOD W/ LINE-UP MODULAR BATTERY
UPS INPUT- OUTPUT FRAME INTERNAL ISOMETRIC

PROJECT: DRAWINGS | SHEET 9 OF 14

DWG NO: SY500K1000TG1C2-4W-LB		REV. 1
DRAWN BY: JAYAPRAKASH	03-FEB-15	THIRD
ENGINEER: M.LEPARD/A.WARNER	03-FEB-15	ANGLE
APPROVED BY: B.SHERIDAN/E.SILVA	03-FEB-15	PROJECTION

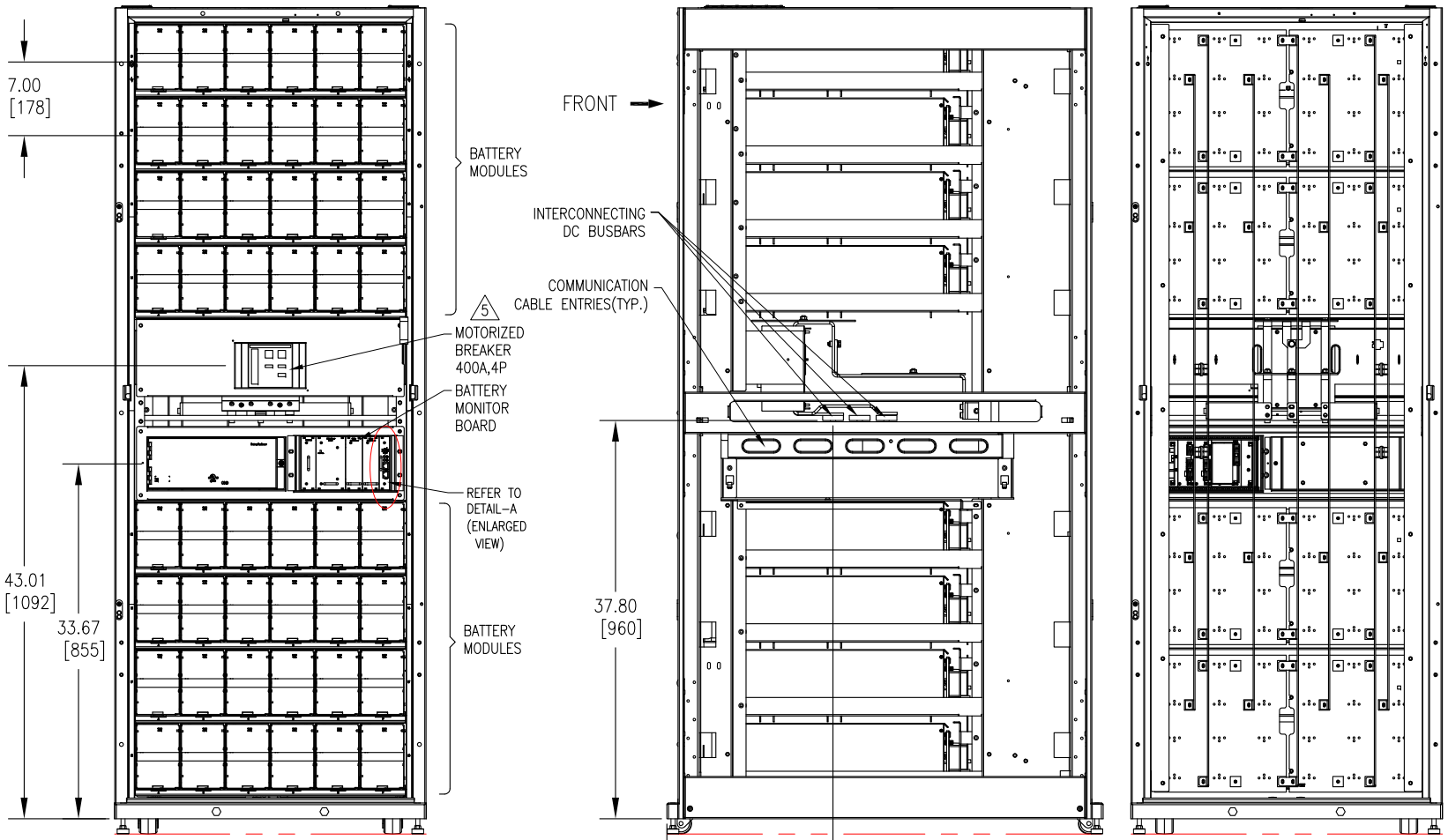

FRONT VIEW
(DOOR REMOVED)

RIGHT SIDE VIEW
(COVERS REMOVED)

REAR VIEW
(DOORS REMOVED)

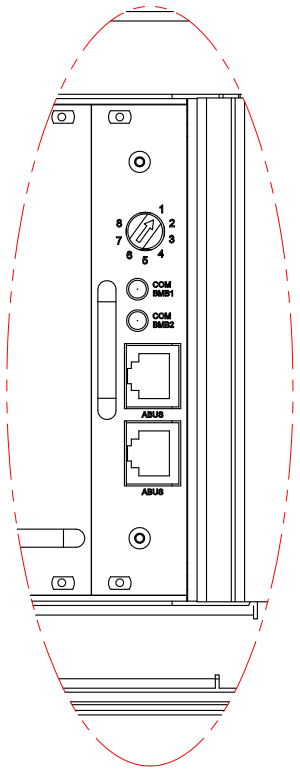

DETAIL-A
(ENLARGED VIEW)

NOTES:
1. INSTALLATION SHALL COMPLY WITH ALL APPLICABLE NATIONAL, STATE AND LOCAL CODES.
2. REFER TO PRODUCT DOCUMENTATION FOR ADDITIONAL DETAILS PRIOR TO INSTALLATION AND SITE PREPARATION WORK.
3. ALL DIMENSIONS ARE IN MILLIMETERS.
4. SOME STRUCTURAL DETAILS HAVE BEEN OMITTED FOR THE PURPOSE OF CLARITY.
△ 5. CIRCUIT BREAKER (MOTORIZED), ABB, 400A 600V 4POLE T5, WITH 24V DC SHUNT TRIP AND AUX. CONTACT. MOTORIZED BREAKER TRIP UNIT ACTIVATED THROUGH EPO/UPS 24V DC SIGNAL.

THIS DRAWING AND SPECIFICATIONS HEREIN ARE THE PROPERTY OF SCHNEIDER ELECTRIC AND SHALL NOT BE COPIED, REPRODUCED OR USED IN WHOLE OR IN PART, AS THE BASIS FOR THE MANUFACTURE OR SALE OF ITEMS WITHOUT WRITTEN PERMISSION FROM SCHNEIDER ELECTRIC. THIS DRAWING IS BASED UPON LATEST AVAILABLE INFORMATION AND IS SUBJECT TO CHANGE WITHOUT NOTICE.

Schneider Electric

TITLE: SYMMETRA PX
Input: 480V AC 3PH SINGLE MAINS
Output: 480V AC 3PH 1000kW
TOP ENTRY 2 MOD W/ LINE-UP MODULAR BATTERY
BATTERY FRAME INTERNAL VIEW

PROJECT: DRAWINGS | SHEET 10 OF 14

DWG NO:	SY500K1000TG1C2-4W-LB	REV. 0
DRAWN BY:	RAMESH B	12-APR-12
ENGINEER:	M.LEPARD/A.WARNER	12-APR-12
APPROVED BY:	B.SHERIDAN/E.SILVA	12-APR-12

THIRD ANGLE PROJECTION

DEVICE RATING					
DEVICE	RATING	TYPE	MAKE	MODEL	ACCESSORIES
Q1A, Q1B	800A, 600V 100% RATED	MCCB, 3 POLE	Schneider Electric	PJP36080CU33AACBCSKYP	3A/3B AUX CONT, BELL ALARM, 24VDC SHUNT TRIP, ML 5.0 TRIP UNIT
Q2A, Q2B	700A, 600V 100% RATED	ICCB, 4 POLE	Schneider Electric	BL1AAV33B9CXBXXXXA	8A/8B AUX CONT, BELL ALARM, 24VDC SHUNT TRIP, ML 5.0 TRIP UNIT
Q3	1600A, 600V 100% RATED	ICCB, 4 POLE	Schneider Electric	BL1EEV33A9CXFXXXXA	8A/8B AUX CONT, BELL ALARM, 120VAC SHUNT TRIP, ML 5.0 TRIP UNIT
Q4	1600A, 600V 100% RATED	ICCB, 4 POLE	Schneider Electric	BL1EEV33A9CXBXXXXA	8A/8B AUX CONT, BELL ALARM, 24VDC SHUNT TRIP, ML 5.0 TRIP UNIT
LBB	1600A, 600V 100% RATED	ICCB, 3 POLE	Schneider Electric	WL1EEV33A9CXBXXXXA	8A/8B AUX CONT, BELL ALARM, 24VDC SHUNT TRIP, ML 5.0 TRIP UNIT
DC DISCONNECT	400A, 600V DC	MCCB, 4 POLE	ABB	T5	1 AUX CONT, 24VDC, SHUNT TRIP, ACTUATOR
INVERTER FUSES F1–F3 / F4–F6	1250A, 700V	HIGH SPEED FUSE	BUSSMANN	170M6466	--
SSW FUSES F1–F3	1100A, 700V	HIGH SPEED FUSE	BUSSMANN	170M5167	--

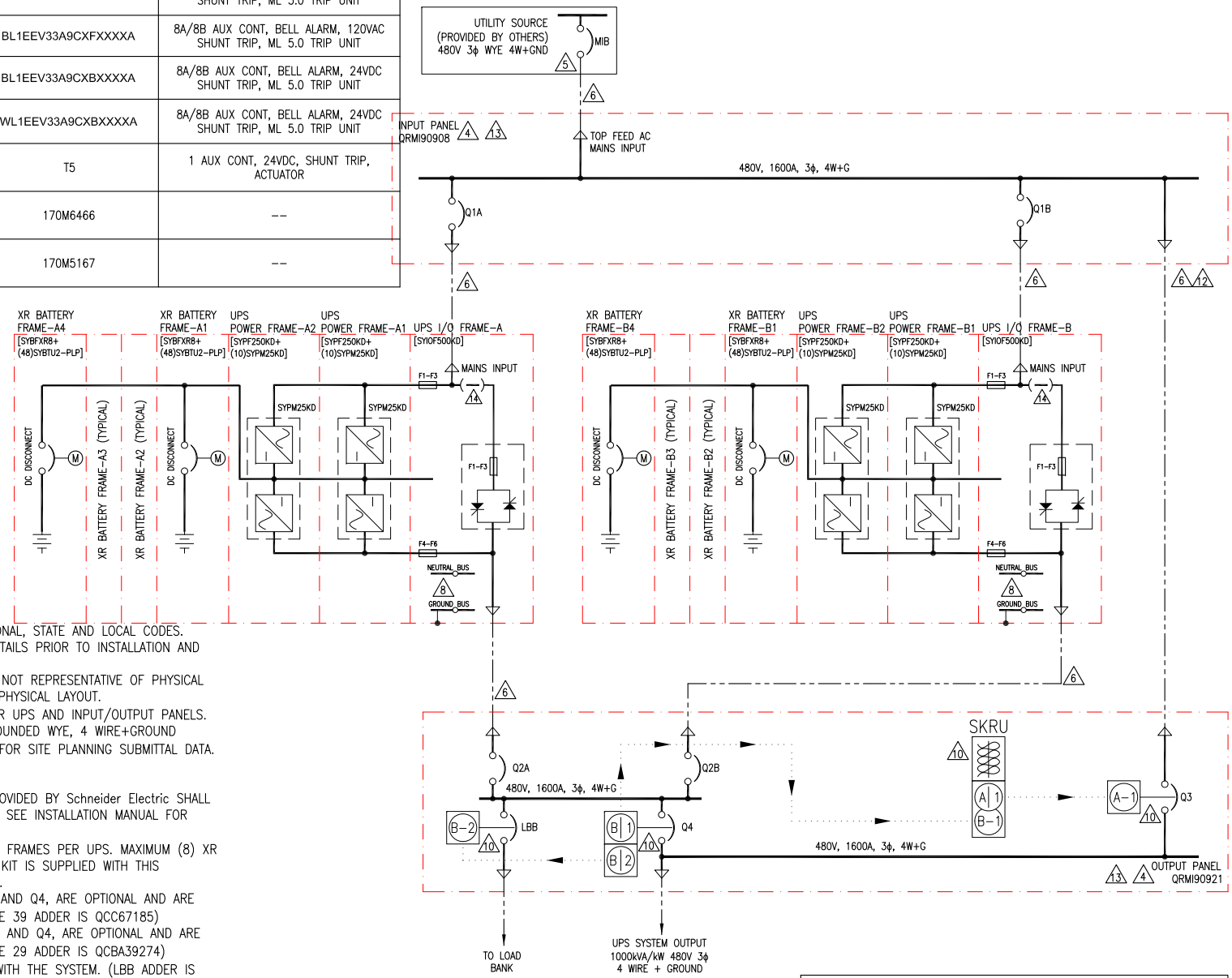

NOTES:

1. INSTALLATION SHALL COMPLY WITH ALL APPLICABLE NATIONAL, STATE AND LOCAL CODES.
2. REFER TO PRODUCT DOCUMENTATION FOR ADDITIONAL DETAILS PRIOR TO INSTALLATION AND SITE PREPARATION WORK.
3. DRAWING DEPICTS POWER SYSTEM CONNECTIONS AND IS NOT REPRESENTATIVE OF PHYSICAL LAYOUT, PLEASE REFER TO MECHANICAL DRAWINGS FOR PHYSICAL LAYOUT.
△ 4. MAXIMUM RATED SHORT CIRCUIT CURRENT IS 65kAIC, FOR UPS AND INPUT/OUTPUT PANELS.
△ 5. AC UTILITY SOURCE SHALL BE 480VAC, 3ϕ, SOLIDLY GROUNDED WYE, 4 WIRE+GROUND (CONTACT Schneider Electric IF OTHER). SEE SHEET 13 FOR SITE PLANNING SUBMITTAL DATA.
△ 6. AC CABLING SHALL BE 600V RATED, 4 WIRE+GROUND.
7. CABLE LUGS ARE NOT PROVIDED.
△ 8. THE NEUTRAL TO GROUND SYSTEM BONDING JUMPER PROVIDED BY Schneider Electric SHALL NOT BE INSTALLED FOR 4 WIRE OUTPUT CONFIGURATION. SEE INSTALLATION MANUAL FOR DETAILS.
9. THIS DRAWING SHOWS MINIMUM NUMBER OF XR BATTERY FRAMES PER UPS. MAXIMUM (8) XR BATTERY FRAMES CAN BE BAYED TO EACH UPS. BAYING KIT IS SUPPLIED WITH THIS SOLUTION. XR BATTERY FRAME HAS MOTORIZED BREAKER.
△ 10. KEY INTERLOCKS WITH SKRU, SCHEME 39, BETWEEN Q3 AND Q4, ARE OPTIONAL AND ARE NOT INCLUDED AS STANDARD WITH THE SYSTEM. (SCHEME 39 ADDER IS QCC67185)
KEY INTERLOCKS WITH SKRU, SCHEME 29, BETWEEN LBB AND Q4, ARE OPTIONAL AND ARE NOT INCLUDED AS STANDARD WITH THE SYSTEM. (SCHEME 29 ADDER IS QCBA39274)
LBB IS OPTIONAL AND IS NOT INCLUDED AS STANDARD WITH THE SYSTEM. (LBB ADDER IS QRMI90957)
INSTALLATION OF LBB AND KEY INTERLOCKS WITH SKRU IS STRONGLY RECOMMENDED.
11. CABLE LENGTHS FOR STATIC BYPASS INPUT AND OUTPUT SHALL BE SAME SUM TOTAL TO ENSURE CORRECT LOAD SHARING IN STATIC BYPASS OPERATION.
△ 12. CABLE SIZE AND INSTALLATION SHALL COMPLY WITH NEC ART. 240.21. IF NOT, USE CABLES RATED SAME AS THE MIB FEEDER.
△ 13. THIRD PARTY PRODUCT PROVIDED BY Schneider Electric. NOT PART OF THIS SOLUTION.
△ 14. SINGLE MAINS IS A DEFAULT CONFIGURATION. BUS BAR LINKS MUST BE PRESENT FOR SINGLE MAINS SINGLE INPUT INSTALLATION.

LEGEND:

AC CABLE – PROVIDED BY OTHERS

THIS DRAWING AND SPECIFICATIONS HEREIN ARE THE PROPERTY OF SCHNEIDER ELECTRIC AND SHALL NOT BE COPIED, REPRODUCED OR USED IN WHOLE OR IN PART, AS THE BASIS FOR THE MANUFACTURE OR SALE OF ITEMS WITHOUT WRITTEN PERMISSION FROM SCHNEIDER ELECTRIC. THIS DRAWING IS BASED UPON LATEST AVAILABLE INFORMATION AND IS SUBJECT TO CHANGE WITHOUT NOTICE.

Schneider Electric

TITLE: SYMMETRA PX
Input: 480V AC 3PH SINGLE MAINS
Output: 480V AC 3PH 1000kW
TOP ENTRY 2 MOD W/ LINE-UP MODULAR BATTERY SYSTEM ONE LINE DIAGRAM–SINGLE FEED

PROJECT: DRAWINGS | SHEET 11 OF 14

DWG NO: SY500K1000TG1C2-4W-LB		REV. 2
DRAWN BY: BALA/S CUNHA	03-FEB-15	ANGLE
ENGINEER: D LOEWENSTEIN/P BOUCHER	03-FEB-15	PROJECTION:
APPROVED BY: B SHERIDAN/C FLY	03-FEB-15	N/A

DEVICE RATING					
DEVICE	RATING	TYPE	MAKE	MODEL	ACCESSORIES
Q1A, Q1B	800A, 600V 100% RATED	MCCB, 3 POLE	Schneider Electric	PJP36080CU33AACBCSKYP	3A/3B AUX CONT, BELL ALARM, 24VDC SHUNT TRIP, ML 5.0 TRIP UNIT
Q2A, Q2B	700A, 600V 100% RATED	ICCB, 4 POLE	Schneider Electric	BL1AAV33B9CXBXXXXA	8A/8B AUX CONT, BELL ALARM, 24VDC SHUNT TRIP, ML 5.0 TRIP UNIT
Q3	1600A, 600V 100% RATED	ICCB, 4 POLE	Schneider Electric	BL1EEV33A9CXFXXXXA	8A/8B AUX CONT, BELL ALARM, 120VAC SHUNT TRIP, ML 5.0 TRIP UNIT
Q4	1600A, 600V 100% RATED	ICCB, 4 POLE	Schneider Electric	BL1EEV33A9CXBXXXXA	8A/8B AUX CONT, BELL ALARM, 24VDC SHUNT TRIP, ML 5.0 TRIP UNIT
Q5A, Q5B	700A, 600V 100% RATED	MCCB, 3 POLE	Schneider Electric	**PJP36080CU33BCBCSKYP**	3A/3B AUX CONT, BELL ALARM, 24VDC SHUNT TRIP, ML 5.0 TRIP UNIT
LBB	1600A, 600V 100% RATED	ICCB, 3 POLE	Schneider Electric	WL1EEV33A9CXBXXXXA	8A/8B AUX CONT, BELL ALARM, 24VDC SHUNT TRIP, ML 5.0 TRIP UNIT
DC DISCONNECT	400A, 600V DC	MCCB, 4 POLE	ABB	T5	1 AUX CONT, 24VDC, SHUNT TRIP, ACTUATOR
INVERTER FUSES F1–F3 / F4–F6	1250A, 700V	HIGH SPEED FUSE	BUSSMANN	170M6466	--
SSW FUSES F1–F3	1100A, 700V	HIGH SPEED FUSE	BUSSMANN	170M5167	--

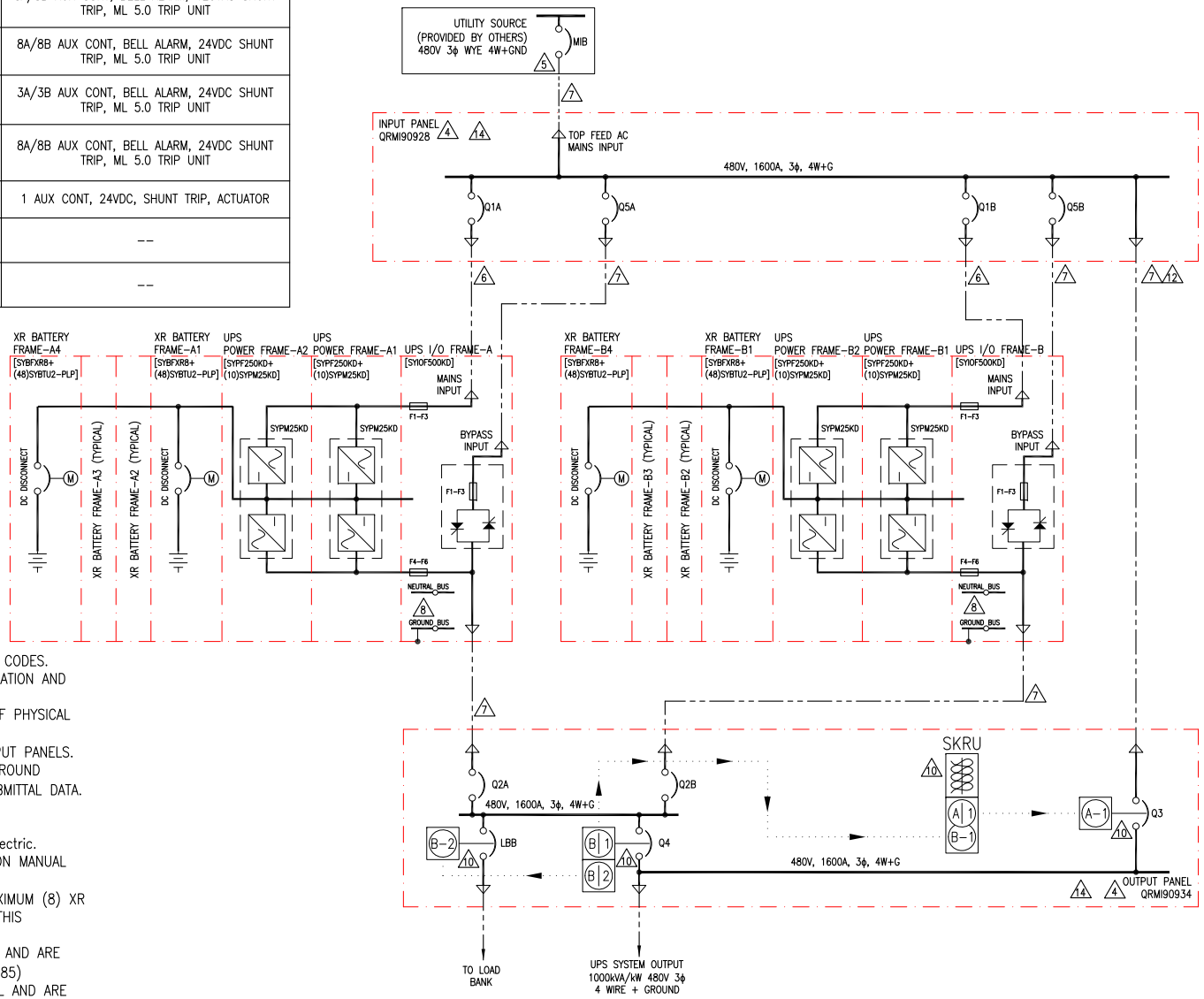

NOTES:

1. INSTALLATION SHALL COMPLY WITH ALL APPLICABLE NATIONAL, STATE AND LOCAL CODES.
2. REFER TO PRODUCT DOCUMENTATION FOR ADDITIONAL DETAILS PRIOR TO INSTALLATION AND SITE PREPARATION WORK.
3. DRAWING DEPICTS POWER SYSTEM CONNECTIONS AND IS NOT REPRESENTATIVE OF PHYSICAL LAYOUT, PLEASE REFER TO MECHANICAL DRAWINGS FOR PHYSICAL LAYOUT.

△ 4. MAXIMUM RATED SHORT CIRCUIT CURRENT IS 65kAIC, FOR UPS AND INPUT/OUTPUT PANELS.

△ 5. AC UTILITY SOURCE SHALL BE 480VAC, 3ϕ, SOLIDLY GROUNDED WYE, 4 WIRE+GROUND (CONTACT Schneider Electric IF OTHER). SEE SHEET 13 FOR SITE PLANNING SUBMITTAL DATA.

△ 6. AC CABLING SHALL BE 600V RATED, 3 WIRE+GROUND.

△ 7. AC CABLING SHALL BE 600V RATED, 4 WIRE+GROUND.

△ 8. THE NEUTRAL TO GROUND SYSTEM BONDING JUMPER PROVIDED BY Schneider Electric. SHALL NOT BE INSTALLED FOR 4 WIRE OUTPUT CONFIGURATION. SEE INSTALLATION MANUAL FOR DETAILS.

9. THIS DRAWING SHOWS MINIMUM NUMBER OF XR BATTERY FRAMES PER UPS. MAXIMUM (8) XR BATTERY FRAMES CAN BE BAYED TO EACH UPS. BAYING KIT IS SUPPLIED WITH THIS SOLUTION. XR BATTERY FRAME HAS MOTORIZED BREAKER.

△ 10. KEY INTERLOCKS WITH SKRU, SCHEME 39, BETWEEN Q3 AND Q4, ARE OPTIONAL AND ARE NOT INCLUDED AS STANDARD WITH THE SYSTEM. (SCHEME 39 ADDER IS QCC67185)
KEY INTERLOCKS WITH SKRU, SCHEME 29, BETWEEN LBB AND Q4, ARE OPTIONAL AND ARE NOT INCLUDED AS STANDARD WITH THE SYSTEM. (SCHEME 29 ADDER IS QCBA39274)
LBB IS OPTIONAL AND IS NOT INCLUDED AS STANDARD WITH THE SYSTEM. (LBB ADDER IS QRMI90964)
INSTALLATION OF LBB AND KEY INTERLOCKS WITH SKRU IS STRONGLY RECOMMENDED.

11. CABLE LENGTHS FOR STATIC BYPASS INPUT AND OUTPUT SHALL BE SAME SUM TOTAL TO ENSURE CORRECT LOAD SHARING IN STATIC BYPASS OPERATION.

△ 12. CABLE SIZE AND INSTALLATION SHALL COMPLY WITH NEC ART. 240.21. IF NOT, USE CABLES RATED SAME AS THE MIB FEEDER.

13. CABLE LUGS ARE NOT PROVIDED.

△ 14. THIRD PARTY PRODUCT PROVIDED BY Schneider Electric. NOT PART OF THIS SOLUTION.

LEGEND:

AC CABLE – PROVIDED BY OTHERS

THIS DRAWING AND SPECIFICATIONS HEREIN ARE THE PROPERTY OF SCHNEIDER ELECTRIC AND SHALL NOT BE COPIED, REPRODUCED OR USED IN WHOLE OR IN PART, AS THE BASIS FOR THE MANUFACTURE OR SALE OF ITEMS WITHOUT WRITTEN PERMISSION FROM SCHNEIDER ELECTRIC. THIS DRAWING IS BASED UPON LATEST AVAILABLE INFORMATION AND IS SUBJECT TO CHANGE WITHOUT NOTICE.

Schneider Electric

TITLE: SYMMETRA PX
Input: 480V AC 3PH SINGLE MAINS
Output: 480V AC 3PH 1000kW
TOP ENTRY 2 MOD W/ LINE-UP MODULAR BATTERY SYSTEM ONE LINE DIAGRAM–DUAL FEED

PROJECT: DRAWINGS | SHEET 12 OF 14

DWG NO: SY500K1000TG1C2-4W-LB			REV. 2
DRAWN BY:	BALA/S CUNHA	03-FEB-15	ANGLE
ENGINEER:	D LOEMENSTEIN/P BOUCHER	03-FEB-15	PROJECTION:
APPROVED BY:	B SHERIDAN/C FLY	03-FEB-15	N/A

Symmetra™ PX 500K UPS 2 Module Site Planning Data - Single Feed w/o MBwD - 4 Wire

UPS Rating				Voltage (VAC)		Mains AC Input - (MIB) [1]						External Battery System [3, 6]					AC Output (Q2) [2]						Mechanical Data (UPS+I/O Frame only) [5, 11]			
						Current (A)		Recommendations [3]							Recommendations		Current(A)		Recommendations [3]							
UPS Frame Rating	Qty of 25kW Power Modules [9]	kVA	kW	Input [1]	Output [2]	Full Load	Max. [7]	100% OCPD	100% Cable	80% OCPD	80% Cable	Nominal VDC	Battery kW	Current @ Nom. VDC (A)	100% OCPD	100% Cable	NOM.	Max. [8]	100% OCPD	100% Cable	80% OCPD	80% Cable	Typical Dimensions (HxWxD) Inch [mm]	Average Weight Lbs [kg]	Floor Loading Lbs/Ft^2 [kg/m^2]	Heat Rejection Battery Fully Charged BTU/HR
250kVA/250kW 1x 250K Frame	4	100	100	480	480	139	149	150A	1x1/0	175A	1x2/0	2x288	104	181	200A	1x3/0	120	150	125A	1x1	150A	1x1/0	78.4x47.3x42 [1991x1201x1067]	1808 [822]	131 [641]	14217
	5	125	125	480	480	173	186	200A	1x3/0	225A	1x4/0	2x288	130	226	250A	1x4/0	150	188	150A	1x1/0	200A	1x3/0		1901 [864]	138 [674]	17771
	6	150	150	480	480	208	223	225A	1x4/0	300A	1x300	2x288	156	271	300A	1x300	180	226	200A	1x3/0	250A	1x4/0		1993 [906]	144 [707]	21325
	7	175	175	480	480	242	261	300A	1x300	350A	1x350	2x288	182	316	350A	1x400	210	263	225A	1x4/0	300A	1x300		2086 [948]	151 [740]	24879
	8	200	200	480	480	277	298	300A	1x350	350A	1x500	2x288	208	362	400A	1x500	241	301	250A	1x250	350A	1x350		2178 [990]	158 [773]	28433
	9	225	225	480	480	312	335	350A	1x400	400A	2x3/0	2x288	234	407	450A	2x4/0	271	338	300A	1x300	350A	1x500		2270 [1032]	165 [805]	31988
	10	**250**	**250**	**480**	**480**	**346**	**372**	**400A**	**1x 500**	**450A**	**2x 4/0**	**2x 288**	**260**	**452**	**500A**	**2x 4/0**	**301**	**376**	**350A**	**1x 350**	**400A**	**1x 500**		**2363 [1074]**	**171 [838]**	**35542**
500kVA/500kW 2x 250K Frame	**11**	275	275	480	480	381	410	450A	2x4/0	500A	2x250	2x288	286	497	500A	2x250	331	413	350A	1x400	450A	2x4/0	78.4x71x42 [1991x1802x1067]	3054 [1388]	147 [722]	39096
	12	300	300	480	480	416	447	450A	2x4/0	600A	2x300	2x288	312	543	600A	2x300	361	451	400A	1x500	500A	2x4/0		3146 [1430]	152 [744]	42650
	13	325	325	480	480	450	484	500A	2x250	600A	2x300	2x288	339	588	600A	2x350	391	489	400A	2x3/0	500A	2x250		3238 [1472]	156 [766]	46204
	14	350	350	480	480	485	521	600A	2x300	700A	2x350	2x288	365	633	700A	2x400	421	526	450A	2x4/0	600A	2x300		3331 [1514]	161 [787]	49758
	15	375	375	480	480	519	558	600A	2x300	700A	2x400	2x288	391	678	700A	2x500	451	564	500A	2x4/0	600A	2x300		3423 [1556]	165 [809]	53313
	16	400	400	480	480	554	596	600A	2x350	700A	2x500	2x288	417	723	800A	2x500	481	601	500A	2x250	700A	2x350		3516 [1598]	170 [831]	56867
	17	425	425	480	480	589	633	700A	2x400	800A	2x500	2x288	443	769	800A	3x300	511	639	600A	2x300	700A	2x400		3608 [1640]	174 [853]	60421
	18	450	450	480	480	623	670	700A	2x400	800A	3x300	2x288	469	814	1000A	3x400	541	677	600A	2x300	700A	2x500		3700 [1682]	179 [875]	63975
	19	475	475	480	480	658	707	800A	2x500	1000A	3x400	2x288	495	859	1000A	3x400	571	714	600A	2x350	800A	2x500		3793 [1724]	183 [897]	67529
	20	**500**	**500**	**480**	**480**	**693**	**745**	**800A**	**2x 500**	**1000A**	**3x 400**	**2x 288**	**521**	**904**	**1000A**	**3x 400**	**601**	**752**	**700A**	**2x 350**	**800A**	**2x 500**		**3885 [1766]**	**188 [918]**	**71083**

Symmetra® PX 500K UPS 2 Module SWBD Site Planning Data [13]

UPS System Rating				Voltage(VAC)		Mains AC Input Single or Dual Feed (MIB) [1]				Bypass AC Input - Dual Feed (BIB - Q3) [2]				AC Output (Q4-LBB) [2]				Heat Rejection Battery Fully Charged BTU/HR
						Current(A)		Recommendations [3]		Current(A)		Recommendations [3]		Current(A)		Recommendations [3]		
UPS Frame Rating	QTY in parallel	kVA	kW	Input [1]	Output [2]	Full Load	Max. [7]	100% OCPD	100% Cable	NOM.	Max. [8]	100% OCPD	100% Cable	NOM.	Max. [8]	100% OCPD	100% Cable	
500kVA 500kW	2	1000	1000	480	480	1386	1489	1600	4x600	1203	1504	1600A	4x600	1203	1504	1600A	4x600	142,166

Symmetra™ PX

Notes.

1. Mains Input source must be 480V Wye 4-wire+ Ground. Contact Schneider Electric if other.
2. Output is 480V Wye 4-wire + Ground. The Mains Input source must match the output configuration .
3. Recommended cables are AWG/kcmil minimum requirement for three (3) current carrying conductors in raceway, sized for 30^0 C environment and 75^0 C terminations. All cabling must comply with installation site conditions and any applicable Local and or National Codes.
4. Ratings of the cables and over current devices supplied for information only. User to consult with their engineering services before adopting.
5. Mechanical Data is approximate and does not include the battery system or external DC Disconnects. For precise mechanical data on your planned system configuration contact Schneider Electric.
6. Contact Schneider Electric for assistance with all external battery designs. Maximum allowed DC cabling voltage drop is 1 VDC. Schneider Electric Standard external DCD's are rated 500A (PX 250kVA) & 1000A (PX 500KVA).
7. Electronic Input Current Limit.
8. This is the UPS short time rating of 125% Overload for 10minutes. Actual short time performance may be limited by the over current protective device selected.
9. For maximum scalability or future expansion it is recommended that the UPS frames be installed at their full ratings- see bold text data.
10. All OCPD's and cabling are by others.
11. Heat rejection calculations are based on watt to BTU/HR conversion factor of 1watt= 3.412 BTU/HR.
12. OCPD = Over Current Protective Device.
13. Common battery system is not allowed or supported for this product.
14. All wirings to be in accordance with all applicable national and/or local electrical codes.
15. Control wiring and power wiring must be run in separate conduit.
16. Input: THDI < 5% at full load.
17. Output: THDU < 2% Linear Load, < 3% Non Linear Load.
18. Requirements for back-to-back Symmetra PX 250/500 UPS installations:
    - To ensure proper airflow, you must install a Plexiglass French Door Kit (0H-0242) at the rear of each Power frame and I/O frame in one of the two systems.
    - To prevent batteries from being overheated by hot air from the power frames, battery frames must be installed back to back, and power frames must be installed back to back.

Efficiency Details

UPS Rating	25% load	50% load	75% load	100% load
500kVA/500kW	95.5%	96.3%	96.4%	96.3%

THIS DRAWING AND SPECIFICATIONS HEREIN ARE THE PROPERTY OF SCHNEIDER ELECTRIC AND SHALL NOT BE COPIED, REPRODUCED OR USED IN WHOLE OR IN PART, AS THE BASIS FOR THE MANUFACTURE OR SALE OF ITEMS WITHOUT WRITTEN PERMISSION FROM SCHNEIDER ELECTRIC. THIS DRAWING IS BASED UPON LATEST AVAILABLE INFORMATION AND IS SUBJECT TO CHANGE WITHOUT NOTICE.

Schneider Electric

TITLE: SYMMETRA PX
Input: 480V AC 3PH SINGLE MAINS
Output: 480V AC 3PH 1000kW
TOP ENTRY 2 MOD W/ LINE-UP MODULAR BATTERY
SITE PLANNING DATA

PROJECT: DRAWINGS | SHEET 13 OF 14

DWG NO: SY500K1000TG1C2-4W-LB | REV. 0

DRAWN BY:	RAMESH B	12-APR-12
ENGINEER:	M.LEPARD/A.WARNER	12-APR-12
APPROVED BY:	B.SHERIDAN/E.SILVA	12-APR-12

ANGLE PROJECTION NA

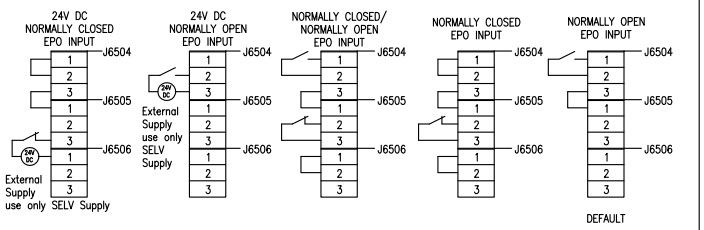

DETAIL–A
(EPO) EMERGENCY POWER OFF CONNECTIONS

1. INSTALLATION MUST COMPLY WITH ALL APPLICABLE NATIONAL, STATE AND LOCAL CODES.
2. REFER TO PRODUCT DOCUMENTATION FOR ADDITIONAL DETAILS PRIOR TO INSTALLATION AND SITE PREPARATION WORK.
△ 3. LIGHTS AND CONTACTS ARE FIELD WIRED.
△ 4. STANDARD CABLE LENGTH IS 50 METERS AND IS PART OF SKU SYOPT007.
5. ON EACH SYOPT007, INSTALL TERMINATOR 0W03913 IN THE J2 TERMINAL ON THE AMB.
6. ON EACH SYOPT007, CONNECT THE "ABUS" CABLE(0W3785C) FROM J4 ON THE AMB(0P4735) TO THE "ABUS" TERMINAL EXTERNAL CONNECTION BOARD OF ID AND RELAY CONTROLLER ON THE FRONT OF THE INPUT/OUTPUT ENCLOSURE.
7. IN EACH UPS, CONNECT THE ECT CABLE(0W3759A) FROM J6500 ON THE ECT BOARD(0P4711) IN MBP TO J6501 ON THE ECT BOARD(0P4711) IN THE TOP OF THE INPUT/OUTPUT ENCLOSURE.
8. IN EACH UPS, CONNECT NORMALLY OPEN(NO) AUXILIARY SWITCH FOR Q1, Q2 AND Q5 STATUS.
9. IN EACH UPS, CONNECT H2 AND H5 LAMPS FOR PERMISSION TO OPERATE Q2 AND Q5.
10. INSTALL 1A FUSE ON EACH PHASE ON THE EXTERNAL SYNC CABLE AT THE SYNC. SOURCE.
△ 11. IN EACH UPS, CONNECT CABLE FOR Q2 TRIPPING TO EITHER:
A. J6503(UVR). WHEN USING SQUARE D UVR OR ABB S8 UVR, AN EXTERNAL 24V DC SELV SUPPLY SHOULD BE CONNECTED TO J6507. FOR THE UVR, THE FOLLOWING PARTS ARE NEEDED TO CONNECT J6503 PIN 2 AND 3: 1 TYCO 1–480700–0, M&L 3–POSITIINO PLUG HOUSING AND 2 TYCO 3650218–3 M&L PIN, AWG 20–14 (NOT SUPPLIED).
B. J6508 (SOR). FOR THE SOR SHUNT TRIP, THE FOLLOWING PARTS ARE NEEDED TO CONNECT TO J6508: 1 TYCO 1–480698–0, M&L 2–POSITINO PLUG HOUSING AND 2 TYCO 350218–3 M&L PIN, AWG 20–147 (NOT SUPPLIED).
12. CONNECT NC CONTACT FOR Q3. EACH UPS MUST BE CONNECTED TO A SEPARATE DRY CONTACT.
13. CONNECT NO CONTACT FOR Q4. EACH UPS MUST BE CONNECTED TO A SEPARATE DRY CONTACT.
14. CONNECT H3 AND H4 LAMPS IN PARALLEL.
△ 15. OPTION: CONNECT EXTERNAL SYNCHRONIZATION CABLES FROM L1 AND L2 OF THE PREFERRED AC SOURCE TO J5(L1) AND J40(L2) ON THE 0P4735 BOARD FOR EACH UPS IN PARALLEL SYSTEM.
△ 16. FOR EPO CONNECTION DEFAULT SETTING AND OPTIONS REFER TO DETAIL–A.

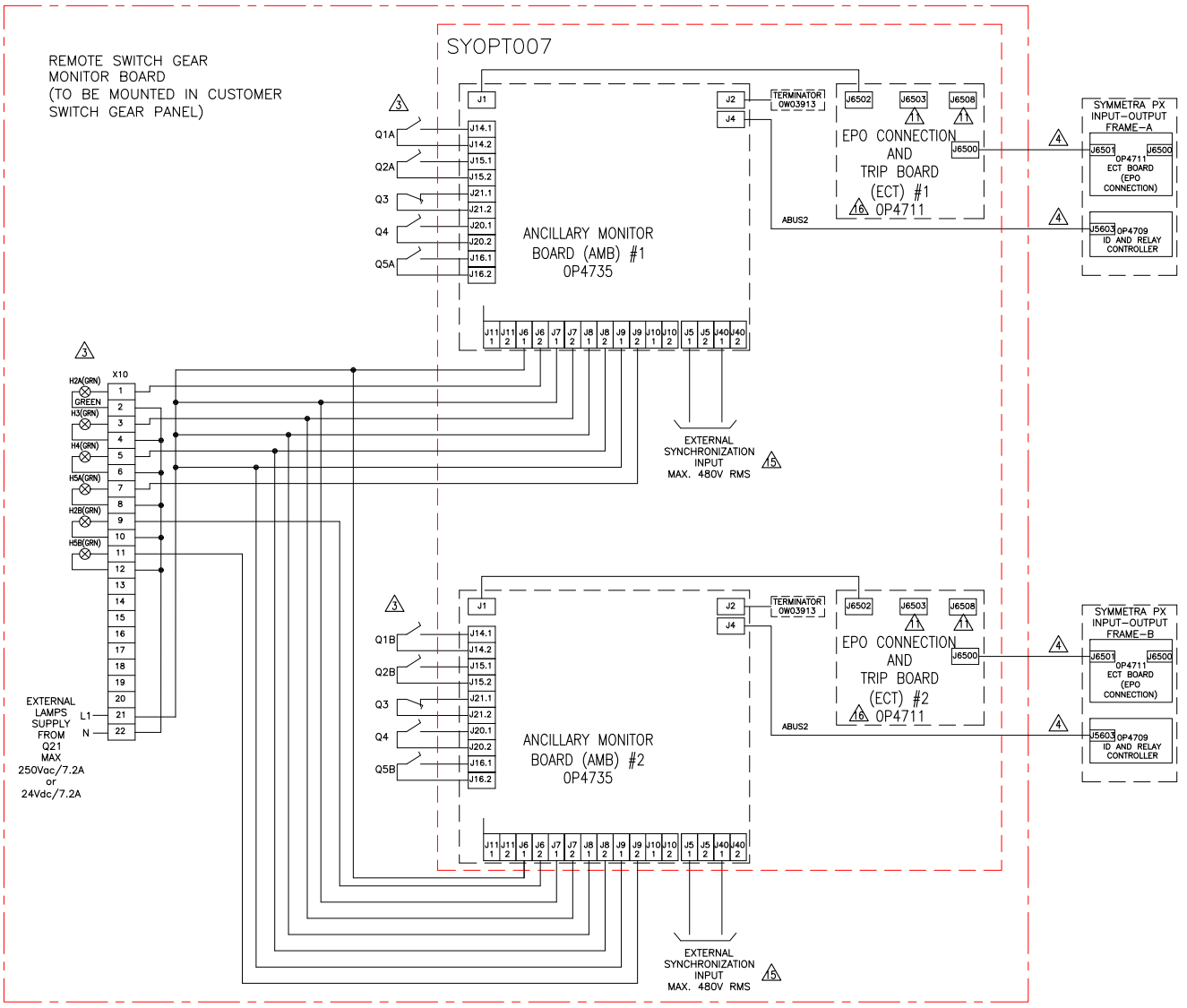

THIS DRAWING AND SPECIFICATIONS HEREIN ARE THE PROPERTY OF SCHNEIDER ELECTRIC AND SHALL NOT BE COPIED, REPRODUCED OR USED IN WHOLE OR IN PART, AS THE BASIS FOR THE MANUFACTURE OR SALE OF ITEMS WITHOUT WRITTEN PERMISSION FROM SCHNEIDER ELECTRIC. THIS DRAWING IS BASED UPON LATEST AVAILABLE INFORMATION AND IS SUBJECT TO CHANGE WITHOUT NOTICE.

Schneider Electric

TITLE: SYMMETRA PX
Input: 480V AC 3PH SINGLE MAINS
Output: 480V AC 3PH 1000kW
TOP ENTRY 2 MOD W/ LINE-UP MODULAR BATTERY
SYSTEM WIRING DIAGRAM

PROJECT: DRAWINGS | SHEET 14 OF 14

DWG NO: SY500K1000TG1C2-4W-LB			REV. 2
DRAWN BY:	RAMESH B/BALA	26-FEB-16	ANGLE
ENGINEER:	M LEPARD	26-FEB-16	PROJECTION
APPROVED BY:	N BOBBITT	26-FEB-16	NA