BATTERY WIRING: STYLE-E

The following connections must be made to the shelf-1(Top shelf)	
Battery-to-battery*	Cables 1-6
Row-to-row	Cables 49
Shelf-to-shelf	Cable 57
Battery-to-terminal	Cable 63

* If two different battery-to-battery cable sizes are specified:
apply two(2) shorter cables to positions 1 and 4,
apply four(4) longer cables to positions 2,3,5 and 6.

The following connections must be made to the shelf-2	
Battery-to-battery*	Cables 7-12
Row-to-row	Cables 50
Shelf-to-shelf	Cable 58
Battery-to-terminal	None

* If two different battery-to-battery cable sizes are specified:
apply two(2) shorter cables to positions 7 and 10,
apply four(4) longer cables to positions 8,9,11 and 12.

The following connections must be made to the shelf-3	
Battery-to-battery*	Cables 13-18
Row-to-row	Cables 51
Shelf-to-shelf	Cable 59
Battery-to-terminal	None

* If two different battery-to-battery cable sizes are specified:
apply two(2) shorter cables to positions 13 and 16,
apply four(4) longer cables to positions 14,15,17 and 18.

The following connections must be made to the shelf-4	
Battery-to-battery*	Cables 19-24
Row-to-row	Cables 52
Shelf-to-shelf	None(Accepts cable 59)
Battery-to-terminal	Cable 64

* If two different battery-to-battery cable sizes are specified:
apply two(2) shorter cables to positions 19 and 22,
apply four(4) longer cables to positions 20,21,23 and 24.

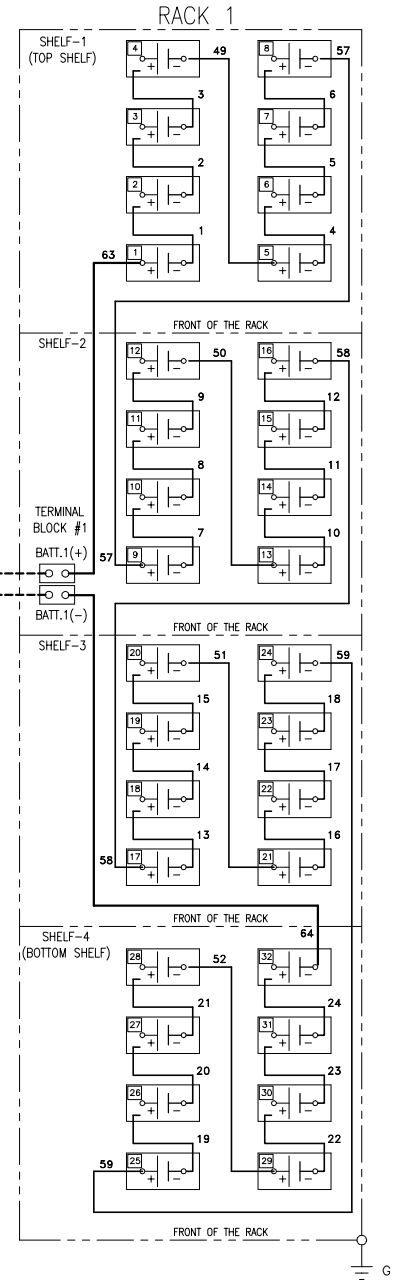

The following connections must be made to the shelf-1(Top shelf)	
Battery-to-battery*	Cables 25-30
Row-to-row	Cables 53
Shelf-to-shelf	Cable 60
Battery-to-terminal	Cable 65

* If two different battery-to-battery cable sizes are specified:
apply two(2) shorter cables to positions 25 and 28,
apply four(4) longer cables to positions 26,27,29 and 30.

The following connections must be made to the shelf-2	
Battery-to-battery*	Cables 31-36
Row-to-row	Cables 54
Shelf-to-shelf	Cable 61
Battery-to-terminal	None

* If two different battery-to-battery cable sizes are specified:
apply two(2) shorter cables to positions 31 and 34,
apply four(4) longer cables to positions 32,33,35 and 36.

The following connections must be made to the shelf-3	
Battery-to-battery*	Cables 37-42
Row-to-row	Cables 55
Shelf-to-shelf	Cable 62
Battery-to-terminal	None

* If two different battery-to-battery cable sizes are specified:
apply two(2) shorter cables to positions 37and 40,
apply four(4) longer cables to positions 38,39,41 and 42.

The following connections must be made to the shelf-4 (Bottom shelf)	
Battery-to-battery*	Cables 43-48
Row-to-row	Cables 56
Shelf-to-shelf	None(Accepts cable 62)
Battery-to-terminal	Cable 66

* If two different battery-to-battery cable sizes are specified:
apply two(2) shorter cables to positions 43 and 46,
apply four(4) longer cables to positions 44,45,47 and 48.

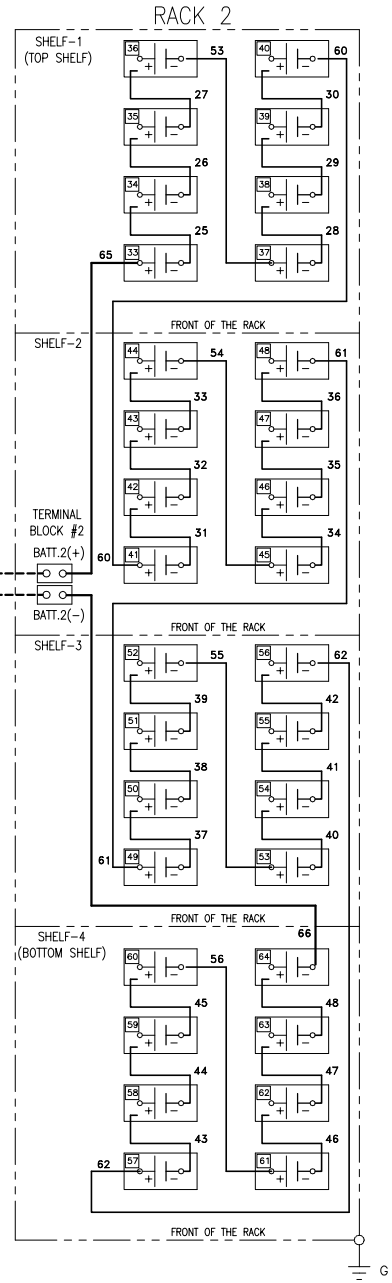

NOTES:

1. -------- = CABLING PROVIDED BY OTHERS.
2. INSTALLATION MUST COMPLY WITH ALL EUROPEAN AND LOCAL ELECTRICAL REGULATIONS..

THIS DRAWING AND SPECIFICATIONS HEREIN ARE THE PROPERTY OF AMERICAN POWER CONVERSION AND SHALL NOT BE COPIED, REPRODUCED OR USED IN WHOLE OR IN PART, AS THE BASIS FOR THE MANUFACTURE OR SALE OF ITEMS WITHOUT WRITTEN PERMISSION FROM APC. THIS DRAWING IS BASED UPON LATEST AVAILABLE INFORMATION AND IS SUBJECT TO CHANGE WITHOUT NOTICE.

TITLE: SILCON 120-160kW UPS BATTERY RACK (SMALL x 2) 120-160kW, 400V (STYLE-E)

PROJECT: SUBMITTAL DRAWING | SHEET 1 OF 3

DWG NO: SLR120K160H1-FB-CD | REV. –

DRAWN BY:	K NAGENDRA	17/05/04
CHECKED BY:	M LEPARD	27/05/04
ENGINEER:	C LARSEN	27/05/04

PROJECTION

AMERICAN POWER CONVERSION
132 FAIRGROUNDS RD
WEST KINGSTON, RI 02892

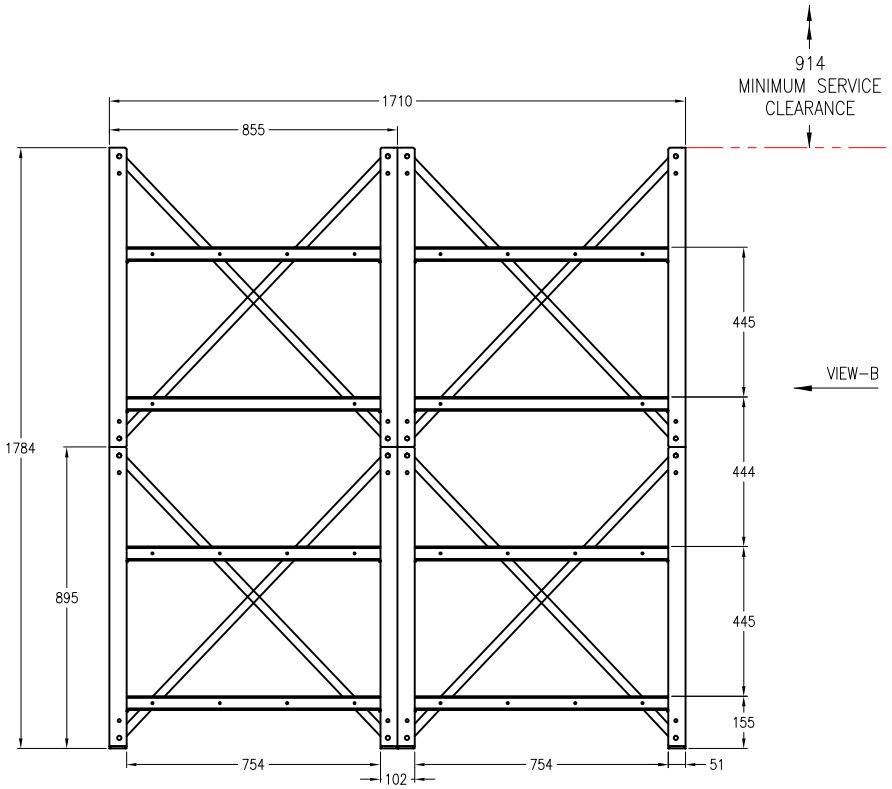

FRONT VIEW

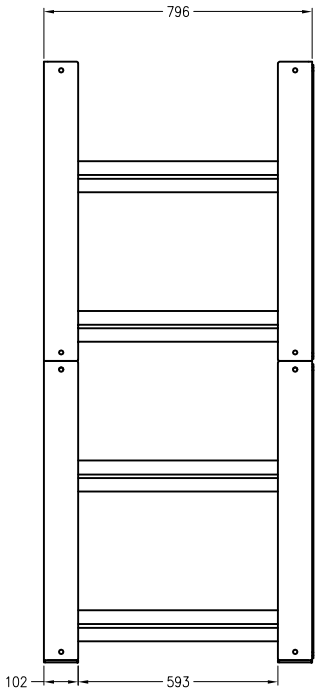

VIEW–B

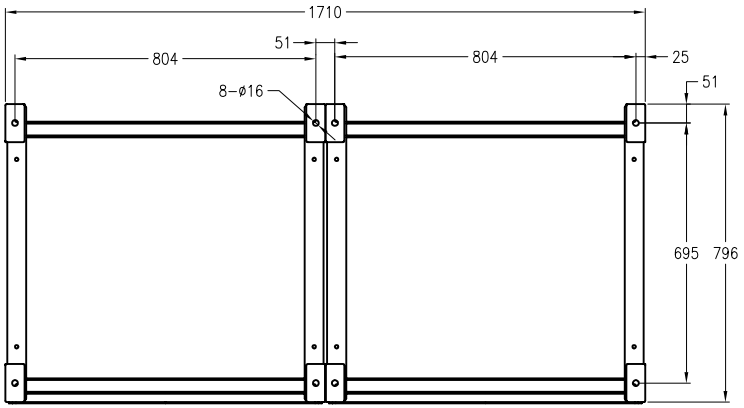

BOTTOM VIEW

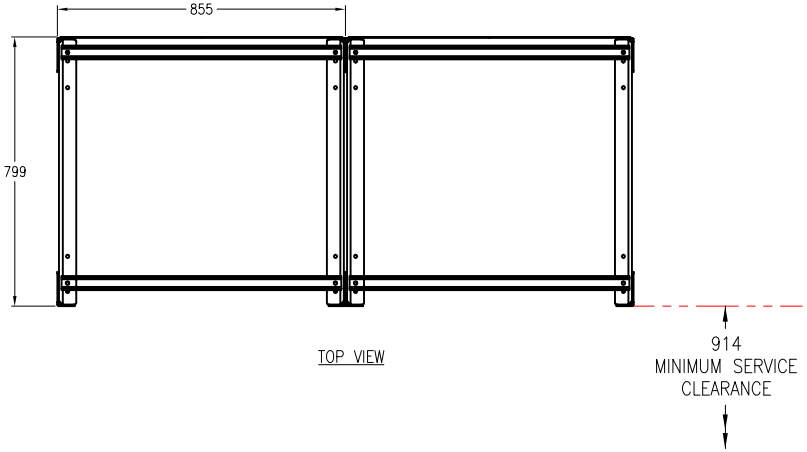

TOP VIEW

NOTES:

1. PLEASE REFER TO APC BATTERY INSTALLATION MANUAL.
2. ALL DIMENSIONS ARE IN MILLIMETERS.
3. CABLE ENTRY IS TOP OR BOTTOM OF UNIT.
4. BATTERY AND WEIGHT INFORMATION –

BATTERY TYPE (MODEL)	BATTERY WEIGHT	RACK WEIGHT	TOTAL WEIGHT
FIAMM 2 (12XLB190)	20.0kg	138kg x 2	1171kg

5. BATTERY RUN–TIME CHART (BASED ON PF=1.0).

SKU NUMBER	120kW	160kW
SLR120K160H2–FB	4 min	2 min

6. INSTALLATION MUST COMPLY WITH ALL EUROPEAN AND LOCAL ELECTRICAL REGULATIONS.

THIS DRAWING AND SPECIFICATIONS HEREIN ARE THE PROPERTY OF AMERICAN POWER CONVERSION AND SHALL NOT BE COPIED, REPRODUCED OR USED IN WHOLE OR IN PART, AS THE BASIS FOR THE MANUFACTURE OR SALE OF ITEMS WITHOUT WRITTEN PERMISSION FROM APC. THIS DRAWING IS BASED UPON LATEST AVAILABLE INFORMATION AND IS SUBJECT TO CHANGE WITHOUT NOTICE.

TITLE: SILCON 120–160kW UPS BATTERY RACK (SMALL x 2) 120–160kW, 400V (STYLE–E)

PROJECT: SUBMITTAL DRAWING

SHEET 2 OF 3

DWG NO: SLR120K160H1–FB–MM1

REV. –

DRAWN BY:	K NAGENDRA	17/05/04
CHECKED BY:	M LEPARD	27/05/04
ENGINEER:	C LARSEN	27/05/04

PROJECTION

AMERICAN POWER CONVERSION
132 FAIRGROUNDS RD
WEST KINGSTON, RI 02892

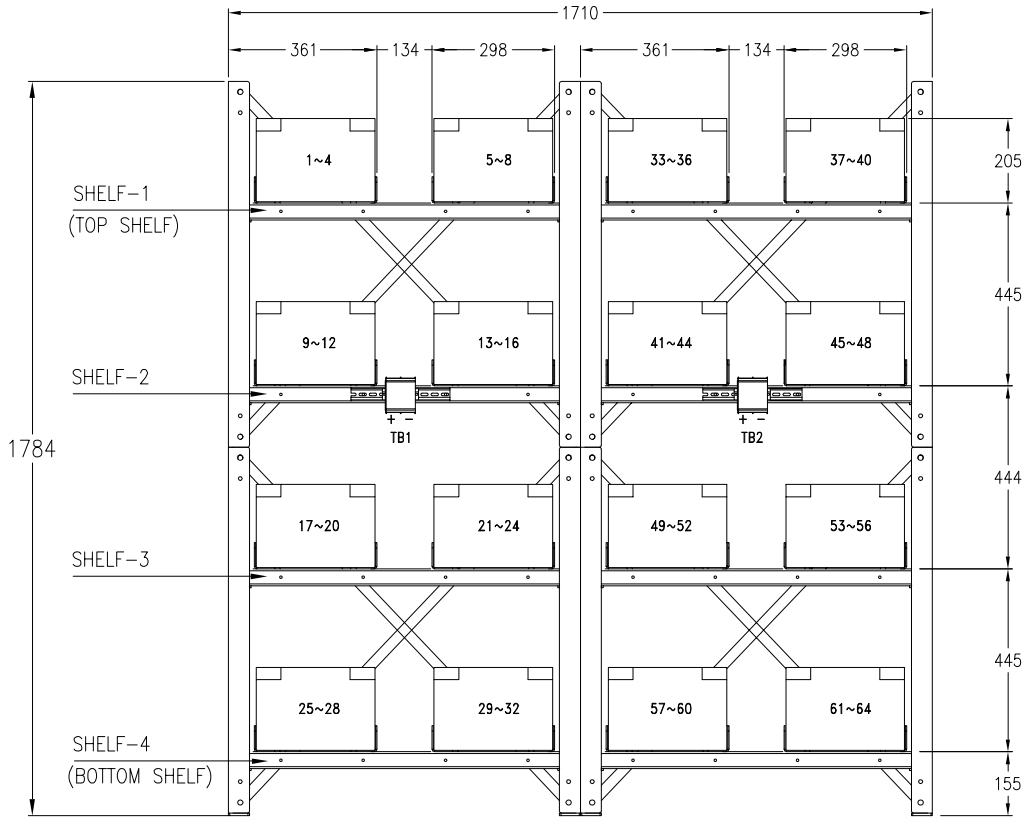

FRONT VIEW

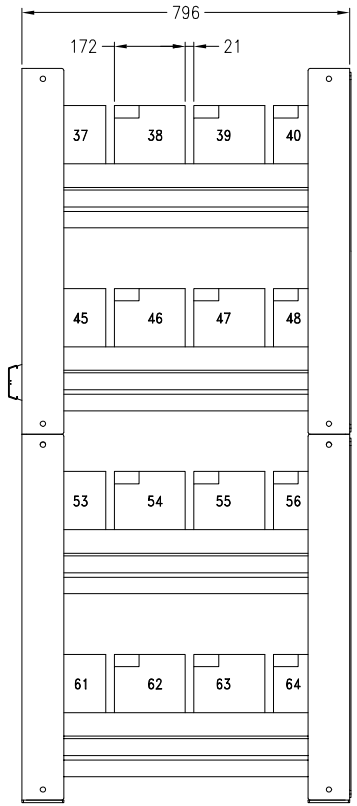

VIEW-B

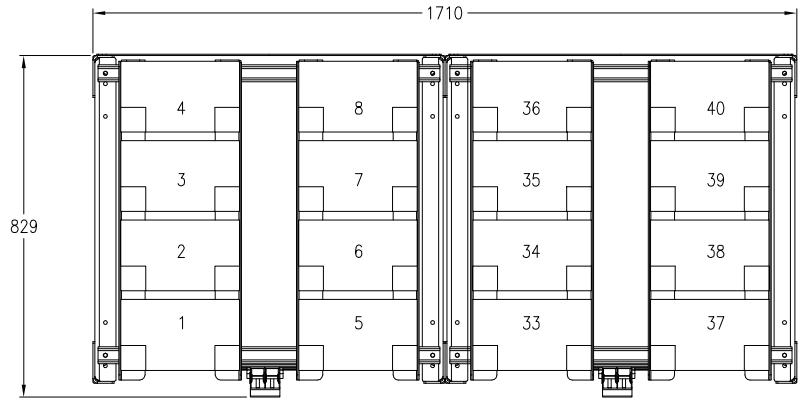

TOP VIEW (SHELF-1~4)

(Only Shelf-1 battery No.s shown for reference)

NOTES:

1. PLEASE REFER TO APC BATTERY INSTALLATION MANUAL.
2. ALL DIMENSIONS ARE IN MILLIMETERS.
3. LOADING AND WIRING OF THE BATTERY SHOULD BE DONE FROM BOTTOM SHELF TO THE TOP SHELF.
4. INSTALLATION MUST COMPLY WITH ALL EUROPEAN AND LOCAL ELECTRICAL REGULATIONS.

THIS DRAWING AND SPECIFICATIONS HEREIN ARE THE PROPERTY OF AMERICAN POWER CONVERSION AND SHALL NOT BE COPIED, REPRODUCED OR USED IN WHOLE OR IN PART, AS THE BASIS FOR THE MANUFACTURE OR SALE OF ITEMS WITHOUT WRITTEN PERMISSION FROM APC. THIS DRAWING IS BASED UPON LATEST AVAILABLE INFORMATION AND IS SUBJECT TO CHANGE WITHOUT NOTICE.

TITLE: SILCON 120-160kW UPS BATTERY RACK (SMALL x 2) 120-160kW, 400V (STYLE-E)	DWG NO: SLR120K160H1-FB-MM2		REV. –
	DRAWN BY: K NAGENDRA	17/05/04	PROJECTION
	CHECKED BY: M LEPARD	27/05/04	
PROJECT: SUBMITTAL DRAWING	SHEET 3 OF 3	ENGINEER: C LARSEN	27/05/04

AMERICAN POWER CONVERSION
132 FAIRGROUNDS RD
WEST KINGSTON, RI 02892