KPX™ range

Medium voltage kiosk substation

Reliable, safe and smart solutions for distribution networks

Schneider Electric

A history of Innovation

1976 Transformer manufacturing started in Benalla , Victoria

1976 First prefabricated (kiosk) substation

1995 First kiosk design with oil containment

2000 First kiosk (KPX) designed to internationally recognised standard IEC 1330

2006 First type tested Internal Arc proof kiosk developed in Australia

2008 A fully integrated automation, monitoring and control system for the kiosk application introduced

Innovation leader from the beginning

High voltage / low voltage (HV/LV) outdoor prefabricated (kiosk) substations have been largely used for more than thirty years, initially in Europe then gradually in other continents. Schneider Electric was first to introduce the prefabricated substation concept in 1976.

Prefabricated substations are defined as an enclosure containing transformers, low voltage and high voltage switchgear, connections and auxiliary equipment to supply low voltage energy from a high voltage system or vice versa.

In 1995 the first International Standard prescribing the operating conditions, characteristics, general requirements and testing methods applicable to prefabricated substations was published by the International Electrotechnical Commission (IEC) as IEC 61330. It was adopted by Standards Australia as AS 61330. In 2008 this standard was superseded by AS 62271.202.

The first prefabricated substation in Australia to successfully pass a type test for personnel protection from internal arc faults to AS 62271.202, was manufactured in Schneider Electric's Benalla factory in 2007. This was followed by successful testing of a Ring Main Unit (RMU) outdoor enclosure in 2008.

Schneider Electric continues to design prefabricated substations at the highest level of safety for the operator and the public.

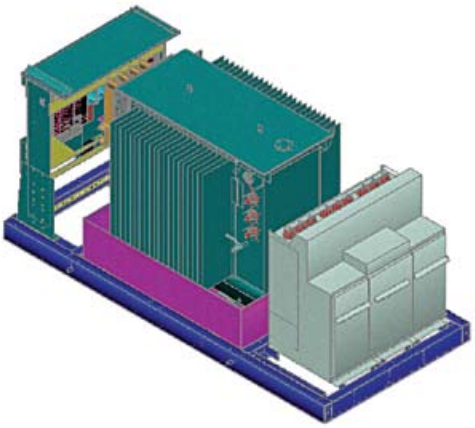

KPX prefabricated kiosk substation

Our achievements

Innovative solutions that work for you

Our kiosk offer underscores Schneider Electric's knowledge in electrical distribution and automation, providing economical solutions for a large range of applications.

Unique kiosk design

Western Power initiated a review of their Ring Main Unit (RMU) specification and kiosk design to easily allow for upgrades, achieve the highest standards for staff and public safety relating to internal arc faults and enabled remote control and monitoring. Western Power prepared a RMU specification for tender in which Schneider Electric was successful conditional upon completion of design and type testing of a unique kiosk and support stand, to meet their requirements and those set by Standards Australia.

Schneider Electric worked closely with Western Power to understand their needs and deliver a robust solution. The result was a unique kiosk design meeting Internal Arc Classification Type AB to house the Remote Terminal Unit (RTU), vandal proof antenna and AC supply terminal box.

Western Power's Distribution Underground Systems Team Leader, Sandeep Magan says:

"The subsequent collaborative approach has allowed Schneider Electric's initial product offering to evolve and has ensured greater value for Western Power."

"We put safety first so it was extremely important that the kiosk design was type tested to meet AS62271:202 Internal Arc Class Type A (safety of operator) and Type B (safety of public) tests. Schneider Electric was able to deliver a successfully type tested kiosk design housing the RMU and RTU, making it the first design of its kind in Australia."

Our innovative solutions help you make the most of your energy

Internal arc

Kiosk substations contain electrical equipment, often located in a public environment, requiring them to meet the highest safety standards.

An internal arc rated kiosk substation design is manufactured to withstand the extreme pressure and force generated during an internal electrical fault.

The risk of equipment failure in a kiosk substation is minimised through the design. In the rare occasions of medium voltage equipment failure, an internal arc rated kiosk design minimises the risk of injury to nearby public or an operator working with the kiosk door open.

The design ensures that extremely hot gases generated during a fault are cooled via a patented filter, reducing the effects of overpressure and flame within the enclosure. The design limits the release of projectiles and flaming particles, which could potentially injure the public, operators or start bushfires.

Schneider Electric has invested in safety studies over the years to provide the safest possible solutions for our customers and general public.

Our new KPX^2 and RMU kiosk designs are type tested to ensure personnel and operator protection against internal arc faults, as per Annex A of Australian standard AS 62271.202. They have an internal arc classification of IAC-AB and are rated to withstand an internal arc fault of 20kA for 1s.

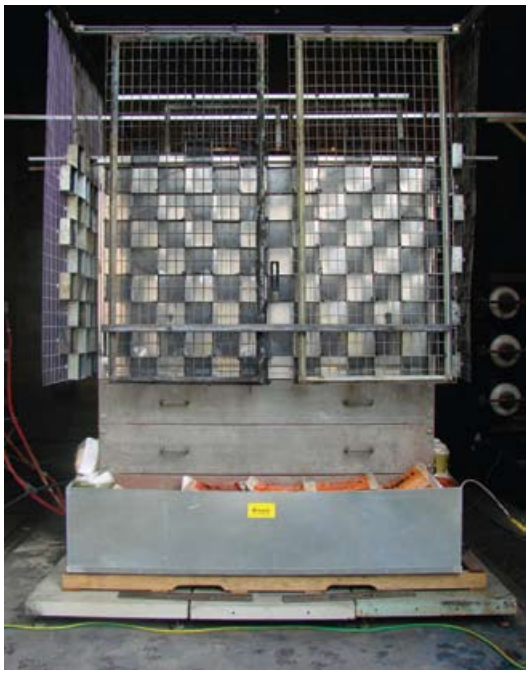

Internal arc test as per AS62271.202

Environment

A kiosk substation should be designed to ensure internal connections are protected from extreme environmental conditions, such as high temperatures, rainfall, dust and wind. Schneider Electric's rigorous testing and graphic modelling ensures proper ventilation, protection against incoming water, sealed connections and secure locked doors.

The KPX kiosk design not only protects against the environment, it also helps to protect the environment. All our kiosk substations incorporate the option of full transformer oil containment. If the transformer leaks oil, there is no risk to the environment, as the oil is contained inside the kiosk. This feature is extremely important for applications close to water catchment areas to avoid possible pollution.

At the end of the kiosk life cycle our service offer makes sure that all materials are handled with respect of environment.

Arc protection, oil containment and network intelligence available in the same reduced footprint.

Wind farm solutions

The initial design of a wind farm can have profound implications for its future profitability. Once a site has been identified and a decision taken to invest in its development, the wind farm design process begins. The fundamental aim is to maximise energy production, minimise capital and operating costs, and stay within the constraints imposed by the site. The kiosk substation for wind farms requires the following considerations:

Environment (oil containment)

The environment surrounding the wind farm needs to be considered. The KPX kiosk has the option for full transformer oil containment. If the transformer develops a leak, there is no risk to environment, as the oil is fully contained inside the kiosk. This feature is extremely important for applications close to water catchment areas to avoid possible pollution.

Wind resistant (smaller locked doors)

Due to the location of wind farms, the kiosk enclosure design needs to withstand high winds. To reduce effect of the wind and to increase safety for the operators, the KPX wind farm kiosk has smaller doors, increased steel thickness and sturdy captive door stays.

Harsh environment (aluminium enclosure)

Wind farms are typically located in harsh environments such as wind swept elevated hills and coastal locations. Aluminium enclosures are available to prolong the life of the kiosk.

Connection to grid (step up transformer)

Because of lengthy distances between the wind turbine towers and the main substation switchyard, the power is transmitted at high voltage. Typically, the power from each of the 690V turbines is stepped up to 22kV or 33kV through a transformer. The higher voltage reduces the power losses and cabling expenditure due to smaller cable sizes.

Electrical utility solutions

For electrical utilities, long black out periods and voltage fluctuations are today unacceptable. Their primary needs include safety of supply and continuity of service, due to increasing pressures from the mandatory measurement of customer service and customer expectations.

Service level (remote control)

To reduce the duration and frequency of power outages, a system of remote control is required. Key elements of an intelligent distribution system include Remote Terminal Units (RTU), motorised Ring Main Units (RMU) and Fault Passage Indicators (FPI). KPX kiosks designs can house the motorised RMU, RTU, FPIs and vandal proof antenna without increasing the footprint of the enclosure.

Efficiency and optimisation (remote monitoring)

Monitoring the network helps to improve efficiency and quality of supply. KPX has a range of solutions to measure the power on both the HV and LV sides of the transformer. This information can then be communicated back to the control room on a variety of different methods.

Safety of operators (internal arc tested design)

If an internal arc fault occurred in the HV switchgear, the effects of such an event must take into consideration the safety of the public and operators near the kiosk. The KPX^2 and RMU kiosk designs are type tested to ensure personnel and operator protection against internal arc faults, as per Annex A of Australian standard AS 62271.202.

Defence solutions

Defence substations differ from those provided by electrical utilities as typically they also form part of the emergency power distribution system and contain control and communications equipment needed to effectively distribute and control emergency power.

Expected life span is 50 years (maintenance and inspection)

A typical defence specification requires that kiosks are designed and installed to operate continuously at full load with a design life of 50 years. This design life is to be achieved with minimal maintenance. The kiosk equipment and enclosure must be selected and manufactured with the necessary corrosion protection to achieve this requirement.

Harsh environment (increased IP rating)

The kiosk must be designed to operate continuously at full load at extremes of temperature, humidity and environmental conditions applicable for the installation location. Hence the degree of protection of defence kiosks is typically higher than those normally required.

Energy availability (remote SCADA connection)

The Defence Engineering Services Network (DESN) is a control and data acquisition system generally consisting of networked data gathering points and a central operator interface. The system monitors and/or controls various engineering services but particularly the electrical power systems. Typically, intelligent metering with integral communications, measuring current, voltage and power, is required on the HV and LV supplies.

Industrial solutions

Reliability of supply for industrial customers is critical. A power outage can cost millions of dollars depending on the type of industry. Their primary needs include quality of supply, energy efficiency and continuity of service.

Quality of supply and energy efficiency (embedded power meters & Power Factor Correction)

Monitoring the network helps to improve efficiency and quality of supply. You can measure harmonic pollution, determine where extra capacity exists, identify over-loaded equipment and balance loads on substations, switchboards and other power equipment. By optimising your electrical system, you extend the life of your installation. KPX has a range of solutions to measure the power on both the HV and LV sides of the transformer. Power Factor Correction capacitors can also be included within the kiosk.

Continuity of service (circuit breaker protection)

If a feeder is lost or a circuit breaker trips, re-establishing supply quickly is critical. This can be achieved using voltage sensors, current sensors and a control unit to transfer supply from one feeder to the other or reclose the circuit breaker. All this intelligence can be incorporated in a kiosk substation.

Carbon footprint (transformer losses)

Since 2004, 11kV and 22kV distribution transformers, up to 2.5MVA, have to meet MEPS (Minimum Energy Performance Standard) regulations as per Australian Standard AS 2374. To decrease your carbon footprint further, higher efficiency transformers complying with Table 3 of AS 2374 are available in KPX. Transformer losses are at minimum when the transformer runs at nominal load. Transformer losses will increase rapidly when it is run at overload or under load. Remote monitoring of the transformer allows you to maintain optimum transformer load and manage a transformer upgrade in a planned manner.

Monitoring and protecting your network

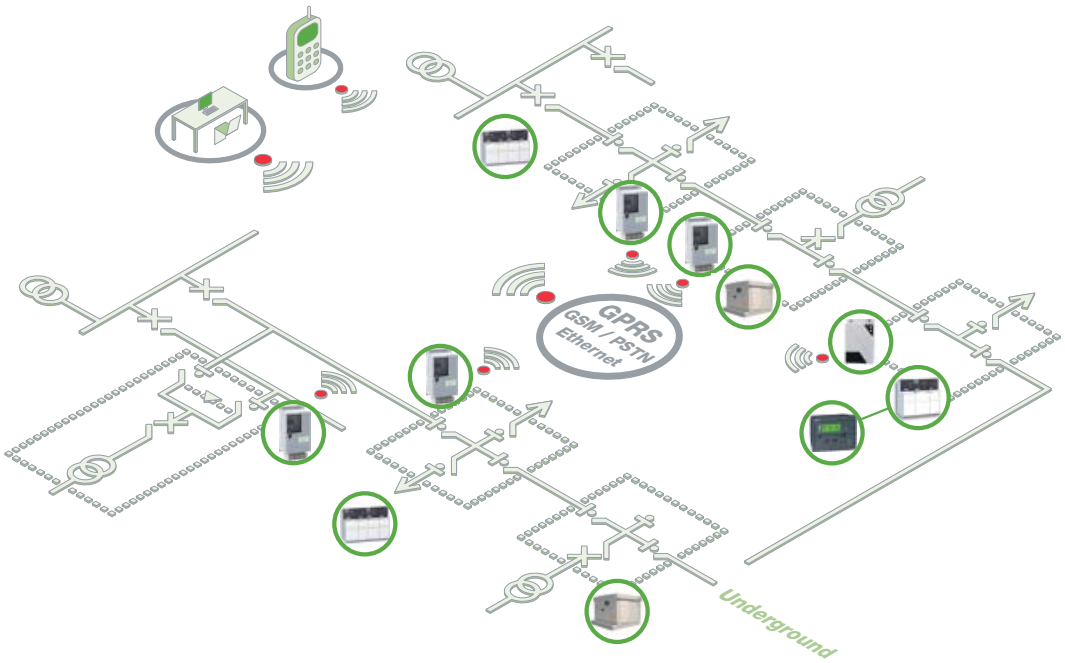

Distribution network management and automation system is the quickest and most economical way to improve SAIDI and SAIFI figures.

Easergy L500
Manage your network within a few clicks.
Focus investment on network instrumentation: Preconfigured SCADA, for Easergy devices, basic SCADA with just enough functions to manage Easergy devices data, not more.

Ensuring power availability at any time

Power supply interruption is unacceptable especially in critical applications, an automatic system is required for medium voltage source transfer.

For peace of mind, RM6 enables automatic control and management of power sources in your medium voltage distribution network with a short transfer time (less than 10 seconds), guaranteeing high reliability of your installation.

Enhancing your network protection

By choosing Sepam 10 Protection Relays, you add communication to protection benefitting from the high reliability of a device that provides:

> very sensitive earth fault protection,

> specific protection (thermal overload: 49RMS),

> load monitoring.

Smart kiosk

Combining our kiosks with remote monitoring and control from the Easergy range, will help you to reduce outage times and significantly improve your service quality and continuity of energy supply. Modern communication infrastructure ensures that your network management system can be set up step-by-step according to your investment plan, gaining benefits from the start. Well planned and designed loop automation systems ensure that the majority of your customers can be reconnected to the network during the first minute after an outage occurs.

KPX^2 with remote control and monitoring

Smart Grid

Smart Grid is the term used to describe a combination of smart devices in a distribution network which work collaboratively to collect information to manage your distribution network, ensuring a high level of service continuity to the end user.

The MV/LV distribution substation (Smart kiosk) has a key role to play in a modern smart distribution system. Well designed and planned remote monitoring, control and automation functions help you significantly improve your System Average Interruption Duration Index (SAIDI), and System Average Interruption Frequency Index (SAIFI) figures and balance your loads.

Smart kiosk is an independent functional unit without the need for continuous communication between the substation and upper management system. At the same time, to be utilised as a data concentrator for your smart meter network. As the majority of end user meters are only a few hundred metres away, it is possible to choose between several communication infrastructures.

Key functions for a Smart kiosk include:

> Monitor transformer overloads
> Advanced transformer protection

> Communication with distribution Network SCADA
> Fault passage indicator on the MV network
> Monitor and control the MV switchgear
> Recording of events and alarms
> Local network communication
> Data concentrator

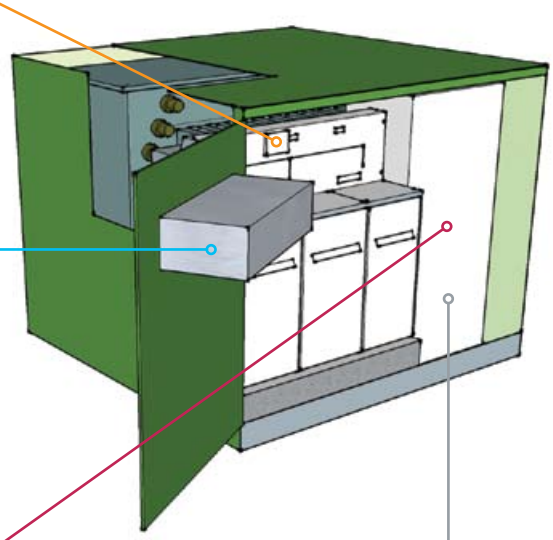

> LV Energy measurement in four quadrants
> LV diagram of loading by phase
> Monitor the LV voltage imbalances
> Monitor the LV quality of service
> Monitor the smart meter
> Control and management of public lighting

A choice of innovative solutions to meet all your applications

RMU outdoor enclosure

KPX^2

KPX

A choice of Automatic Transfer Systems to increase power availability

ATS 1/2

On loss of voltage on L1, the Automatic Transfer System automatically switches to L2.

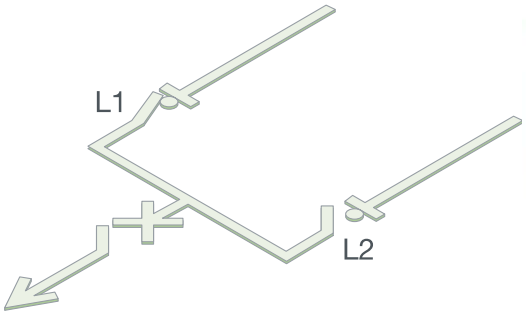

KPX^2 with remote control and monitoring

Schneider Electric (Australia)

Head Office
Postal Address:
Locked Bag 5500
Baulkham Hills
NSW 2153 Australia

Australia Wide
Tel: 1300 369 233
Fax: 1300 369 288
www.schneider-electric.com.au
help@au.schneider-electric.com

Schneider Electric (NZ)

Head Office
Postal Address:
PO Box 15355
New Lynn
Waitakere 0640,
Auckland,
New Zealand

New Zealand Wide
Tel: 0800 652 999
Fax: 0800 101 152
www.schneider-electric.co.nz
help@au.schneider-electric.com

As standards, specifications and designs change from time to time, always ask for confirmation of the information given in this publication.

Printed with vegetable oil-based ink on Mega Recycled Silk, an environmentally considered sheet consisting of 50% post consumer recycled waste and 50% FSC certified fibre. Mega Recycled is manufactured at the Gohrsmuhle Mill, who have their own waste water treatment plant and are ISO 14001 EMS approved. Mega Recycled is made elemental chlorine free.

AMTED1280809AU