Building - Area:

Tertiary building, school, community centre…

Open space offices, event room, hall, pathway, pool, restaurant.

Application:

Air quality management of one simple air handling unit.

EcoXpert™

Optimise the cycle operation of only one air handling unit!

Class C
(EN 15232)

VOB 1B: Ventilation Optimisation in Buildings

Solution

- Manage air ventilation combined with a temperature scale from -35 °C to +120 °C.
- Manage building work hours, vacancies and days off.
- Take into accounts all possible bypasses.
- Control the extraction process and reduce time operation.
- Optimise the air purge by extraction of the inside air depending of the outside temperature.

User benefits

> Optimise the energy used without impact on user comfort.

> Reduce operating costs.

> Cruise control mode for occupant's comfort.

> Cost effective and affordable.

> Save money: up to 40,000 kwh/year for a 1,000 m^2 building.

Schneider Electric

VOB 1B: Ventilation Optimisation in Buildings

Diagram

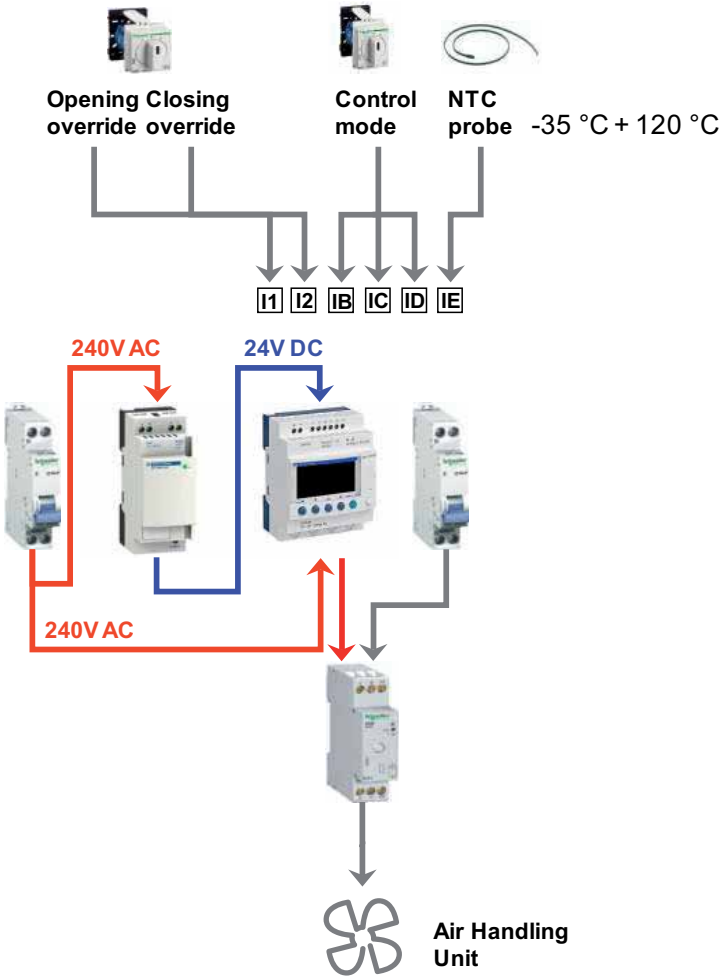

Your EcoXpert

Features

+ Simple integration with existing installed products (contactors, impulse relays, etc…).
+ Facilitate programming thanks to software ergonomics.
+ Single bypass override for warning and emergency situation.

Schneider Electric Industries SAS
35, rue Joseph Monier
CS 30323
F- 92506 Rueil Malmaison Cedex

RCS Nanterre 954 503 439
Capital social 896 313 776 €
www.schneider-electric.com

As standards, specification and designs change from time to time, please ask for confirmation of the information given in this publication

This document has been printed on ecological paper

Design: Schneider Electric
Photos: Schneider Electric

© 2013 - Schneider Electric - All rights reserved.