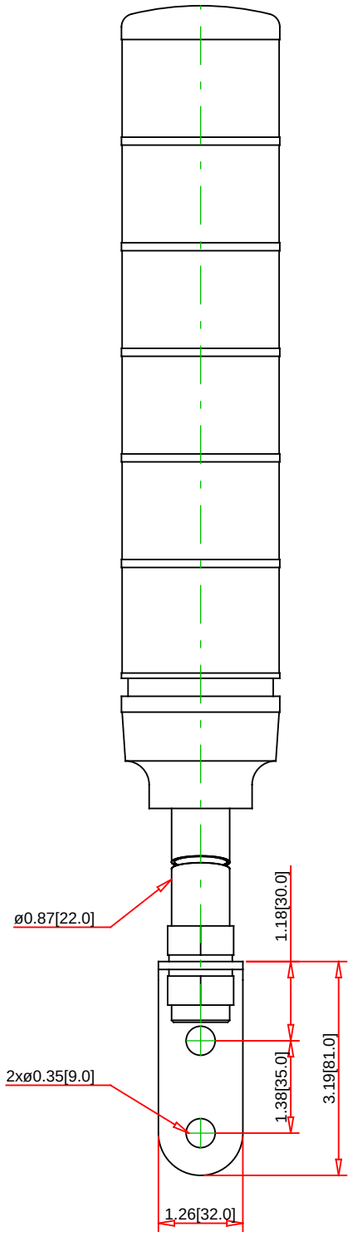

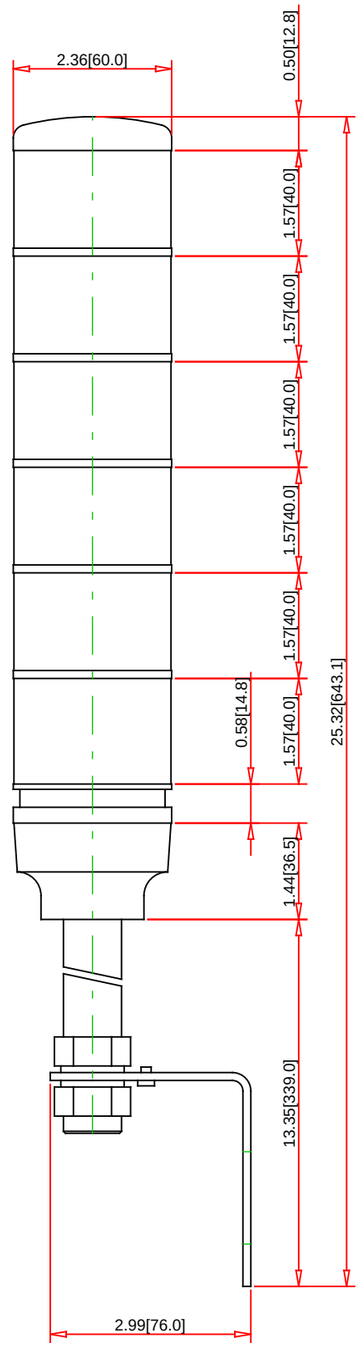

Note:
- Drawings Not To Scale
- Drawings Subject to Change Without Notice
- Dimensions are inches next to [Millimeters]

Part No.:

XVC6B55S

Schneider Electric United States
North American Division
Boston One Campus
800 Federal Street
Andover, MA 01810, USA
Phone:+1 8773425173
Email: CCC@us.schneider-electric.com

Technical Information:

UL File:	E164353 CCN NKCR
CSA File:	LR44087 Class 3211-03
CE Marked:	Yes
RoHS compliant:	Yes
NEMA / IP Rating:	NEMA 3R/12 - IP 54

Specification:

Description:	
Size:	60mm diameter
Housing Color:	
Lens Color:	Red, Orange, Green, Blue and Clear
Bulb Color:	
Supply Voltage:	24V AC/DC
Signaling Effect:	Steady or Flashing Light (Integral LED) with buzzer
Mounting Type:	Support Tube
Terminal Type:	
Cable Length:	550mm
Comments:	Pre-Wired and Pre-Assembled