www.apc.com

AIS® 3000 and XR Battery Enclosure

10-30kVA
208V

Operation Manual

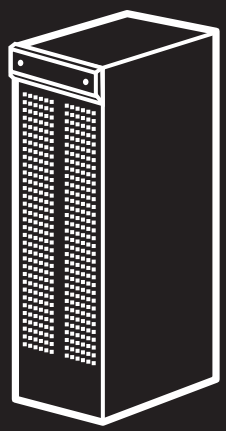

AIS® 3000 and XR Battery Enclosure 10-30kVA 208V

Operation Manual

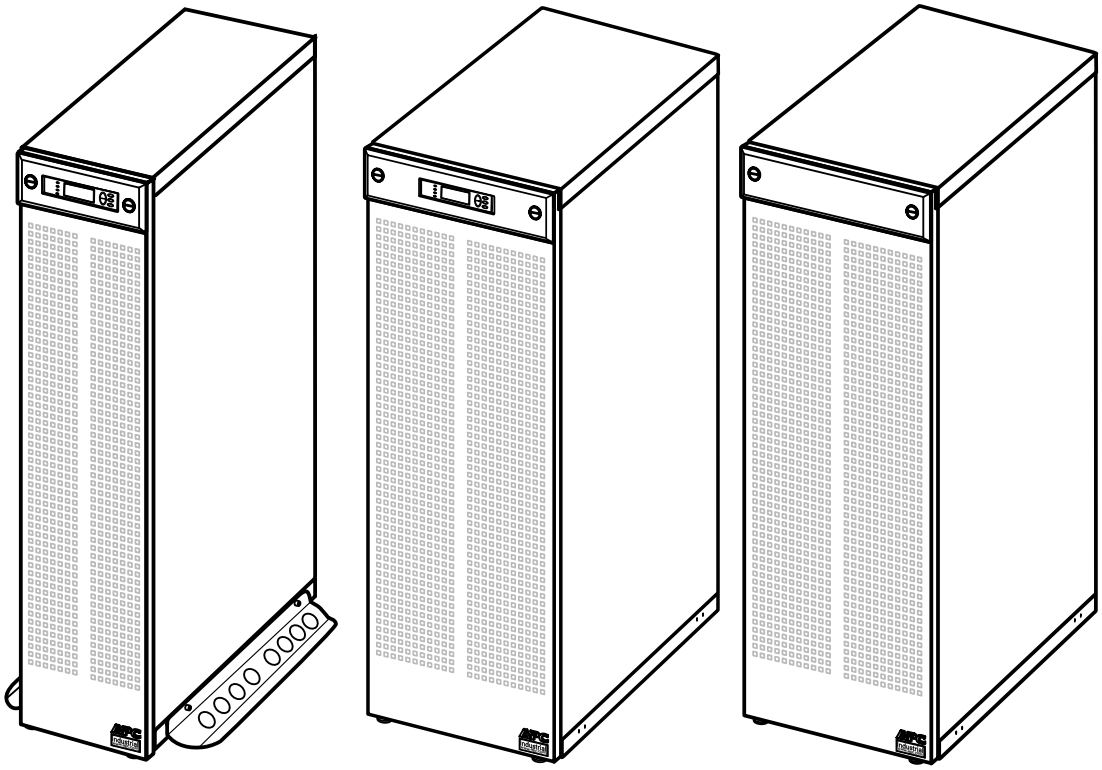

IMPORTANT SAFETY INSTRUCTIONS - SAVE THESE INSTRUCTIONS

This manual contains important instructions for the ISVT series that should be followed during installation and maintenance of the UPS and Batteries

Contents

Introduction 1

The AIS 3000 Family Range 2

13.85in/352mm Enclosures 2

20.59in/523mm Enclosures 2

IMPORTANT SAFETY INSTRUCTIONS 4

Warning/note symbols 4

Environmental symbols 4

General safety 5

Start-Up (if applicable) 6

Power application 6

Voltage confirmation 7

Operation Modes 8

Normal operation 8

Battery operation 8

Bypass operation (or static bypass operation)utility 8

Mechanical bypass 8

Wrap-around maintenance bypass 9

The Display 10

Introduction 10

Navigation 11

Menu-driven user functions 11

Basic display navigation principles 12

Control functions 12

Status views 13

Clock set-up 14

Logging 15

Alarm threshold 16

Display setup 16

Diagnostics screen 18

Front Panel Removal/Installation 19
Removal 19
Installation 20
Air Filter Inspection/Replacement. 21
Air filter inspection 21
Battery Replacement 24
General safety prior to module replacement 24
Battery Module 24
Removal of Battery Securing Brackets (if applicable) 25
Battery Module removal 26
How to install a Battery Module 26
Network Management Card with Environmental Monitor. 28
Network Management Card replacement 28
How to Obtain Replacement Parts 29
Orderable parts 29
Total-Power-Off Procedure 30
Display Messages/Troubleshooting 32
Display messages 32
Mechanical Bypass. 35
Mechanical Bypass Lever 35
Turn into mechanical bypass 35
Turn into normal operation (from bypass operation) 36
Maintenance Bypass Panel. 37
Operation procedure 37
LIMITED FACTORY WARRANTY. 38
APC product covered 38
Terms of warranty 38
Non-transferable warranty extends to first purchaser for use . 38
Assignment of warranties 38
Drawings, descriptions 39
Warranty claims procedure 39
Exclusions 39

Appendix 41

UPS Components and Options. 41

13.85in/352mm Enclosures 41

20.59in/523mm Enclosures 41

System sizes, part nos., number of Battery Modules and weights 42

Part number coding: 42

Battery Module 43

Conduit Box 43

Front Panel overview 43

Stabilizing Bracket 44

User interface 45

Extended Run Battery Enclosure (XR Enclosure) and Battery Module 46

Part Numbers for XR Enclosures 47

Part Number for Battery Module 47

Maintenance Bypass Panels with Power Distribution Capability 47

Floor anchoring and battery securing equipment 48

Introduction

Welcome to the Operation Manual covering the AIS® 3000 UPS and the Extended Run Battery Enclosure (XR Enclosure). This manual provides you with a detailed description of start-up, operation, and troubleshooting.

Note

The UPS manuals:
Receiving and Unpacking - part # 990-1961
Site Planning and Electrical Installation - part # 990-1957
are provided in the documentation storage area at the top right corner on the UPS (behind the Front Panel).

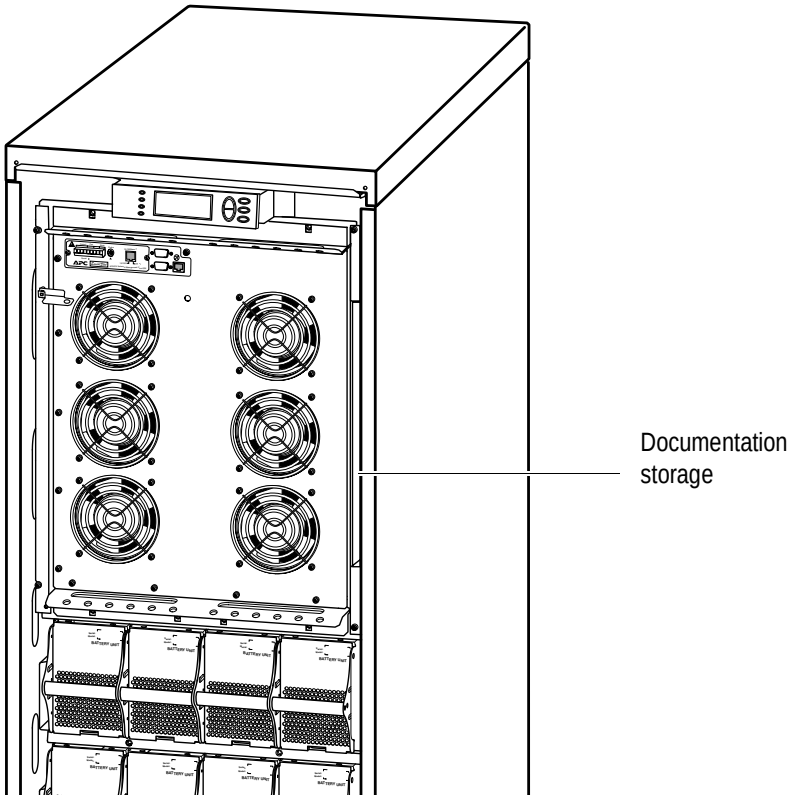

Note

See installation manual no. 990-2195 for documentation on Extended Run Battery Enclosure and manual no. 990-4198 on Maintenance Bypass Panels with/without Power Distribution Unit.

Note

For more details on APC products and services, visit us at www.apc.com

The AIS 3000 Family Range

13.85in/352mm Enclosures

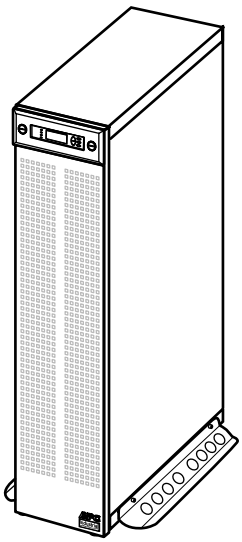

Front view

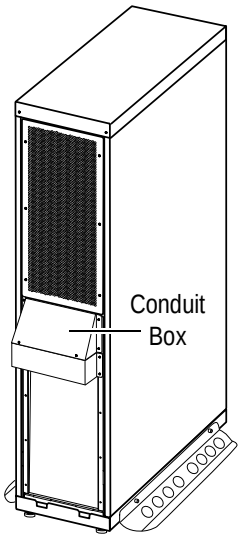

Rear view

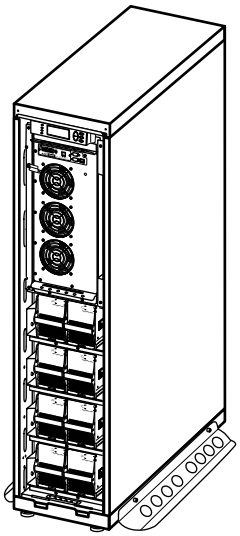

Front view without cover
10-15kVA

20.59in/523mm Enclosures

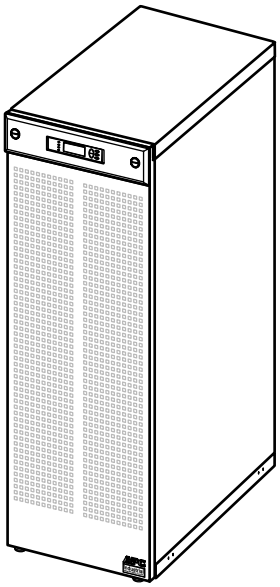

Front view

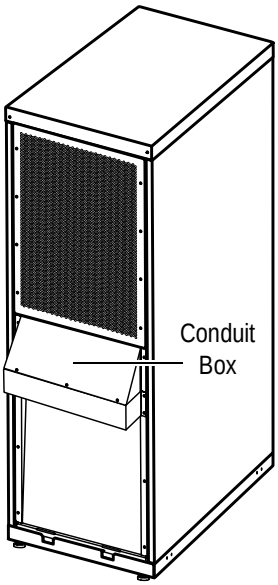

Rear view

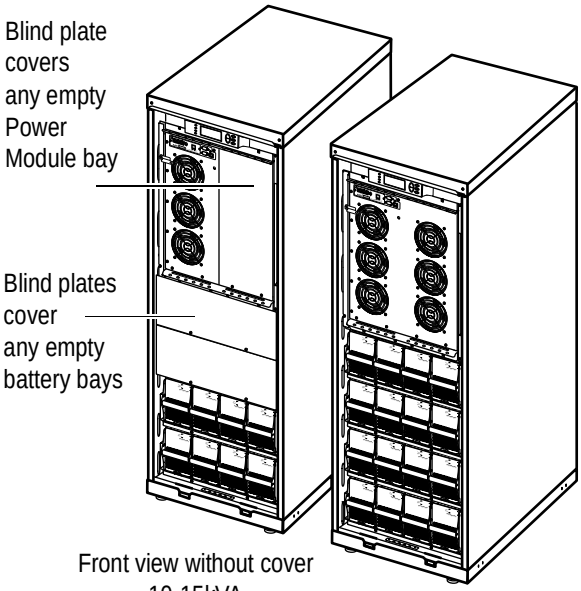

Front view without cover
10-15kVA

Front view without cover
20-30kVA

WARNING!

Only trained persons familiar with the construction and operation of the equipment, including the electrical and mechanical hazards involved, may install and remove system components.

Details on the UPS sizes, runtime, weight etc. are available in the Appendix under *UPS sizes, weights, and runtime configurations.*

Most illustrations show 20.59in/523 mm Enclosures but apply to both Enclosure sizes. Any differences between the two Enclosure sizes will be addressed in the manual.

IMPORTANT SAFETY INSTRUCTIONS

This guide contains important instructions that should be followed when handling the UPS, Battery Enclosures, and Batteries.

Warning/note symbols

WARNING!
Risk of electric shock.

CAUTION!
Read this information to avoid equipment damage.

Indicates important information.

Indicates that more information is available on this subject in a different section of this manual.

Indicates that more information is available on the same subject in a different manual.

Environmental symbols

Temperature	Ventilation requirements	Humidity	Dust/Fumes	Altitude

General safety

Two people to lift components weighing between 40 - 70 lbs / 18 - 32 kg.

Indicates that a switch or current protection device is ON.

Indicates that a switch or a breaker is OFF.

For configurations including customer-supplied external batteries, refer to manufacturer's battery installation and maintenance instructions.

Start-Up (if applicable)

Note

Start-up is included with the UPS, and the start-up procedure described here is only applicable if the UPS requires a subsequent start-up.

Power application

WARNING!
Only trained personnel familiar with the construction and the equipment may carry out the start-up procedure.

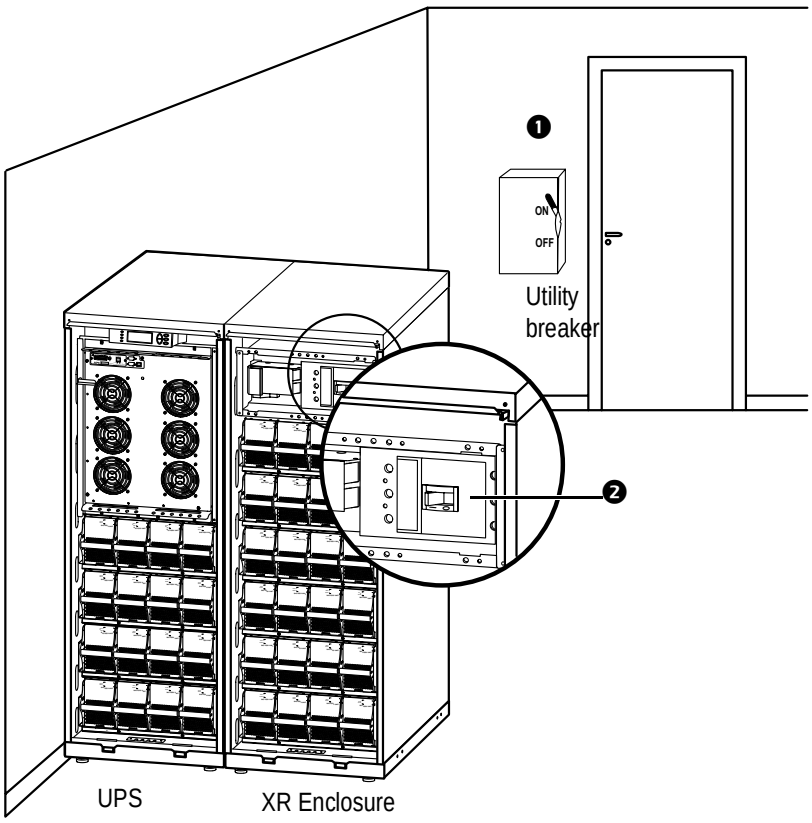

1. Set the utility breaker to ON.
2. If your installation includes an XR Enclosure with a DC disconnect switch, turn the DC disconnect switch ON.

Note

Wait approximately 30 seconds for the system to boot up and carry out self test.

After system boot-up, the display will atuomatically prompt you on how to confirm/select voltage and frequency as shown in the following.

Voltage confirmation

See display introduction under *The Display.*

At the initial start-up, the display will prompt you through the following screens:

```
Confirm Voltage
Use 208V
Yes, use 208V
No, select another
```

- When the *Confirm Voltage* prompt appears on the screen, use the arrow key on the display to select desired voltage, and press ENTER.

```
Apply load?
Yes
No
```

- When the prompt *Apply load* appears, select *Yes* if you want the UPS to provide a load output now. (If you do not want a UPS load output at this point, select *No*).

```
Chrg xxx% ||||||||||
Load xxx% ||||||||||
xxx Vin xxxVout xxHz
Runtime: xxhr xxmin
```

Status screen

LOAD ON LED is now lit, and the display will show the Confirm Status Screen.

Note

The UPS is now ready to support the load.

Operation Modes

In a stand-alone installation, the UPS has four different operating modes. If the installation includes a Maintenance Bypass Panel, bypass mode and test mode will also be available.

Normal operation

During normal operation, the UPS converts utility power to conditioned power for the connected load.

Battery operation

During battery operation, the UPS provides power to the connected load from its internal and (if applicable) external batteries for a finite period. The UPS transfers to battery operation if the supply of utility power fails, or is outside pre-defined limits.

Bypass operation (or static bypass operation)utility

Static bypass operation can either be obtained by user request or automatically, as the UPS will switch into bypass operation if both the normal and battery operation modes are unavailable. During static bypass operation, the utility power is sent through internal Radio Frequency Interference (RFI) filters to the connected load, bypassing the internal power converters. The UPS transfers to bypass operation following a command received via the user display, or after a short or heavy overload on the output of the UPS. Battery back-up is not available in bypass operation.

Mechanical bypass

In mechanical bypass, utility power is sent directly to the connected load through a mechanical breaker, bypassing all internal UPS functions and filters. Mechanical bypass is obtained by the operation of the mechanical bypass breaker lever located behind the front cover. Mechanical bypass is a feature designed to keep the load supplied with utility power at maintenance of the power sections of the UPS. All major maintenance operations can be performed with the UPS running in mechanical bypass, and with the load being supplied directly with unconditioned utility power.

Wrap-around maintenance bypass

The UPS can be connected to an external Maintenance Bypass Panel. When activated, this panel bypasses the entire UPS Enclosure (only possible with an optional APC Maintenance Bypass Panel), feeding utility power directly to the load. An activated wrap-around Maintenance Bypass Panel completely isolates the UPS and allows maintenance to be performed - including a replacement of the entire UPS.

The Display

Introduction

CAUTION!

The display provides access to more functions than described in this manual. Those functions should not be accessed without the assistance of APC Customer Support in order to avoid unwanted load impacts. For APC World-wide Customer Support, refer to rear cover of this manual.

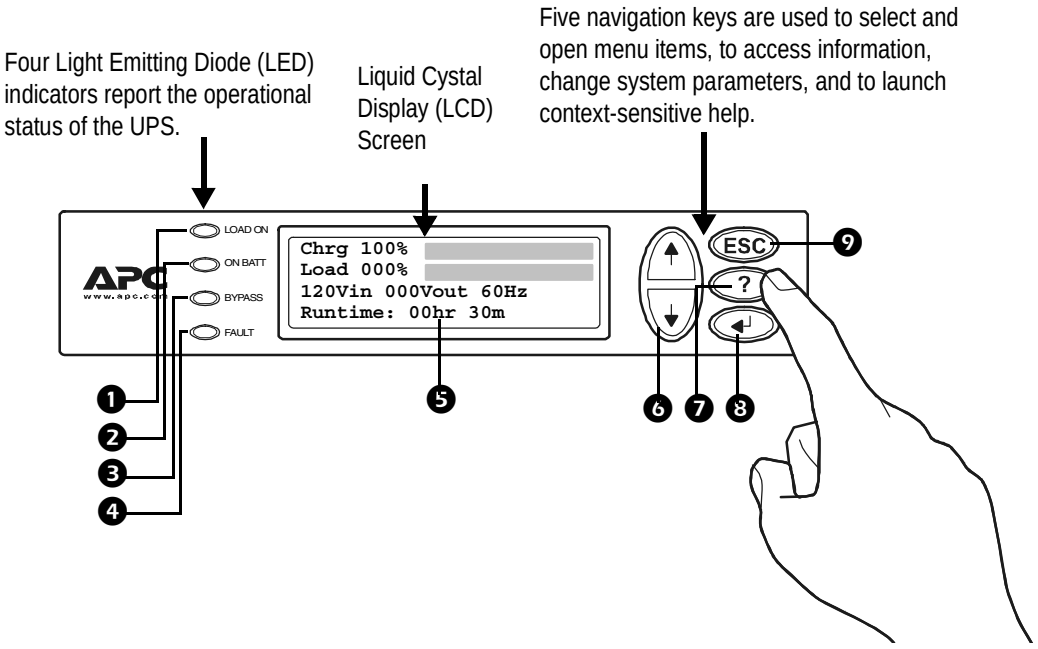

❶	LOAD ON	When the green LED is on, the UPS provides power to the load equipment.
❷	ON BATT	When the yellow LED is on, power to the load flows from the batteries to the Power Module.
❸	BYPASS	When the yellow LED is on, power to the load is supplied through the static bypass switch or mechanical bypass.
❹	FAULT	When the red LED is on, a fault condition exists.
❺	LCD Screen	Displays alarms, status data, instructional help, and configuration items.
❻	UP and DOWN navigation keys	Selects menu items and accesses information.
❼	HELP key	Launches context-sensitive help.
❽	ENTER key	Opens menu items and input changes to system parameters.
❾	ESC key	Returns to previous screen displayed.

Navigation

Menu-driven user functions

If you get beyond the functions described in the menu tree, do not proceed. Press ESC to go back.

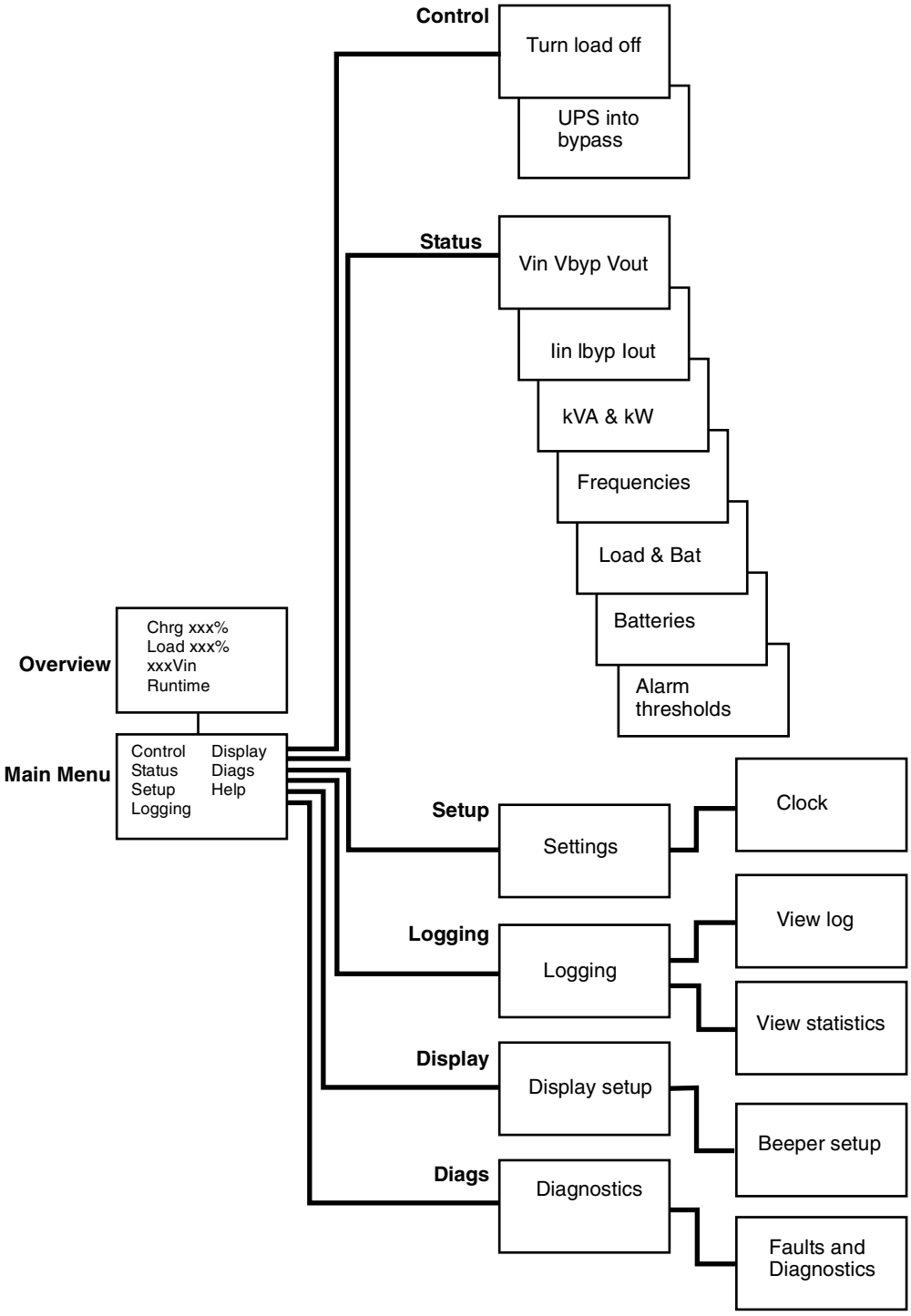

Basic display navigation principles

On the display, press ESC until you get to the Overview Screen, which provides you with basic system status information.

Press **UP, DOWN** arrows to navigate the selector arrow and view all sub-menu screens.

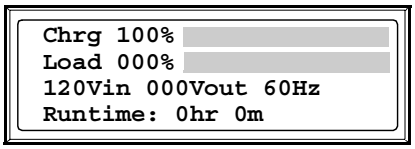

Overview Screen

Press **ENTER** to open the **Main Menu** screen. From here, you command, configure, and monitor the system.

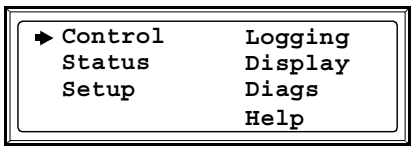

Main Menu

Control functions

From the Control screen on the Main Menu, you can select the following functions:

- Turn Load OFF/ON
- Switch the UPS into Bypass/out of Bypass

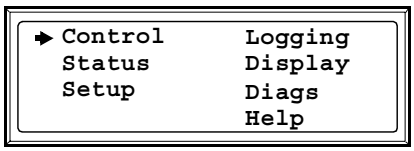

Main Menu

WARNING!

Disconnecting the UPS output to the load, does NOT de-energize the UPS! Always follow the *Total-Power-OFF* procedure if you need to de-energize the UPS in emergency situations!

Turn load OFF (disconnect the UPS output to the load equipment):

- From the Main Menu, select *Control* and press ENTER
- Use UP/DOWN key to navigate to *Turn Load Off*, and press ENTER
- Select *YES*, *Turn Load Off*

Turn load ON:

- From the Main Menu, select *Control* and press ENTER
- Use UP/DOWN key to navigate to *Turn Load On*, and press ENTER
- Select *YES, Turn Load On*

Turn into bypass:

- From the Main Menu, select *Control* and press ENTER
- Use UP/DOWN key to navigate to *UPS into Bypass* and press ENTER
- Use UP/DOWN key to navigate to *YES, UPS into bypass*, and press ENTER

Turn out of bypass:

- From the Main Menu, select *Control* and press ENTER
- Select *UPS out of Bypass* and press ENTER
- Use UP/DOWN key to navigate to *YES*, *UPS out of Byp,* and press ENTER

Status views

Select *Status* on the Main Menu to view the status on the following parameters

Main Menu

Voltage on all phases.

Utility voltage (V), bypass voltage (V), and output voltage (V) for each phase.

Current on all phases.

Utility current (A), bypass current (A), and output current (A) for each phase.

kVA and kW.

Apparent power (kVA) and real power (kW) generated by the UPS to the load.

Frequencies.

Utility frequency, bypass frequency and output frequency in Hertz (Hz).

Load and batteries.

Load: Percentage of the load in relation to the total UPS capacity.
Bat Voltage: shows either the positive or negative half of the battery voltage (the lower value of the two will appear).
Bat Cap: Percentage charge on the batteries in relation to the total battery capacity.
Runtime: The predicted runtime at the current load.

Batteries.

Bat AmpHr: Battery capacity, including both external and internal batteries.
UPS Temp: The highest external battery temperature.

Alarm thresholds.

Load: An alarm will be set when the load is above the threshold level.
Runtime: An alarm will be set when the runtime is below the threshold level.

Clock set-up

From the *Setup* screen on the Main Menu, you can change the date and the clock setting. From the *Settings* screen, select *Clock*, and press ENTER. A date and a time line will appear.

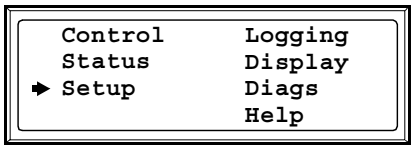

Main Menu

Time.

The clock function is used to time-stamp events in the event log. To avoid inaccuracies, change the clock-setting at e.g. daylight-saving time.

Date

- To change the date, press ENTER (the day field will become active). Press the UP/DOWN arrow to select the desired date.
- To change the m*onth* and the *year*, follow the same procedures.
- Press ENTER to confirm the new settings, or ESC to cancel.

Time

- To change the time, press ENTER (the *hour* field will become active). Press the UP/DOWN arrow to select the desired time.
- Follow the same procedure to change the *minute* and the *second* fields.
- Press ENTER to save, or ESC to cancel.

Press ESC to return to the Main Menu.

Logging

From the logging screen on the Main Menu, you can view the 100 most recent UPS log events, and view the logged details of the events, such as date and time of occurrence, and event number.

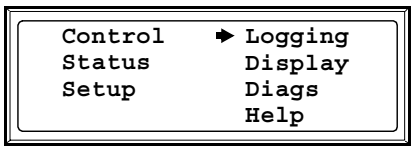

Main Menu

- From the Main Menu, select *Logging*
- Select *View Log*
- Press ESC to return to Main Menu

Example:

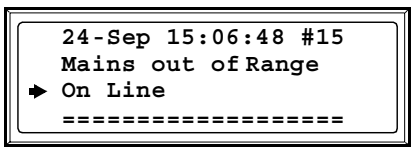

Logging Screen (example)

The top line indicates date, time and event number.

Lines 2, 3 and 4 are part of the event list. To view the entire list, use UP/DOWN arrows to navigate. For a detailed description of a particular event, position the arrow, and press ENTER.

View Statistics (submenu under Logging).

From the Logging screen on the Main Menu, you can view the statistics on operation mode changes, inverter time, duration of battery operation.

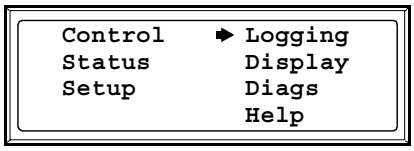

Main Menu

- From the Main Menu, select *Logging*
- Select *View Statistics*
- Press ESC to return to Main Menu

Alarm threshold

If the load level exceeds the preprogrammed threshold, the UPS will display a warning.

Example:

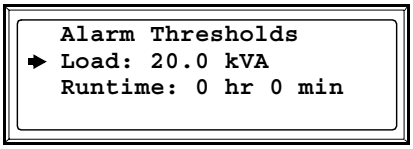

Alarm Threshold Screen

To change the Alarm Thresholds,

- Select *Setup* from the Main Menu
- Select *Alarms* from the Setup Menu
- Press ESC to return to the Main Menu

Display setup

From the *Display setup* screen, you can select your display *Language, Contrast* and *Beeper* functions.

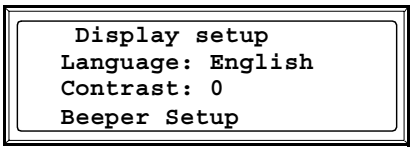

Display Setup Menu

Language selection.

From the Main Menu, select *Display Setup*.

To change the language, select *Language*, and press ENTER. The *Language* line is now active. Use the UP/DOWN arrows to select the desired language. Press ENTER to confirm your selection.

Contrast setting.

From the D*isplay Setup* Menu, select *Contrast*.

To change the contrast, select *Contrast*, and press ENTER. Use the UP/DOWN arrows to select the contrast level - the lower the number, the darker the contrast. Select ENTER to confirm the setting.

Beeper setup.

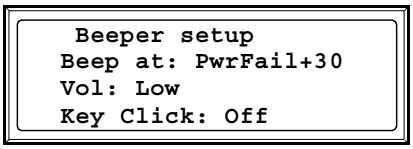

Beeper Setup Menu

From the *Beeper Setup* Menu, select *Beeper Setup*.

To change the beeper setup, select *Beep at* and press ENTER. You now have the following options:

- **Never**: If you select this setting, the Beeper will be active at internal UPS errors only.
- **PwrFail+30**: If you select this setting, the Beeper will be active at Internal UPS errors **and** at main or bypass errors. The Beeper will only sound if the fault has been present for more than 30 seconds.
- **PwrFail**: If you select this setting, the Beeper will be active at Internal UPS errors **and** at main or bypass errors. The Beeper will sound immediately the error is occurring.
- **Low Batt:** If you select this setting, the Beeper will be active at internal UPS errors **and** at main or bypass errors **and** at power failures **and** at low battery level (if the UPS runs in battery operation).

Press ENTER to confirm your setting, or ESC to cancel.

Vol:
The default setting is *low*. This setting can be changed to *medium*, *high, or Off*. Press ENTER to confirm your setting, or ESC to cancel.

Key Click:
The default Key Click function is set to *Off*. Select *On* if you want to change this setting to *On*. Press ENTER to confirm your setting, or ESC to cancel.

Press ESC to return to previous screen.

Diagnostics screen

From the *Diags* screen on the Main Menu, you can view the information given on failures for use in troubleshooting.

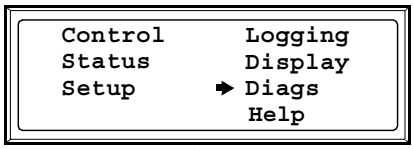

Main Menu

- From the Main Menu, select *Diags*, and press ENTER
- Use UP/DOWN arrow to select *Fault and Diagnostics* and press ENTER

Note

For more details on Fault and Diagnostics screens, see the *Troubleshooting* section.

Front Panel Removal/Installation

Removal

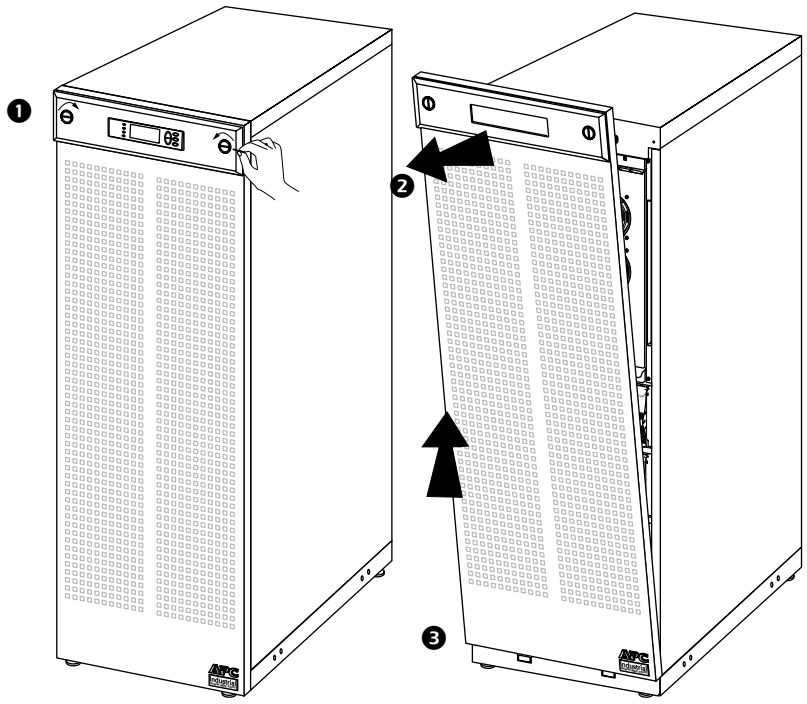

1. To remove a Front Panel, use a coin or similar, and turn the 2 black lock devices on either side of the Display in direction of each other to vertical level.
2. Pull the Front Panel outwards to disengage the locking device at the top of the Enclosure.
3. Lift the Front Panel free of the two slots at the bottom of the Enclosure.

Installation

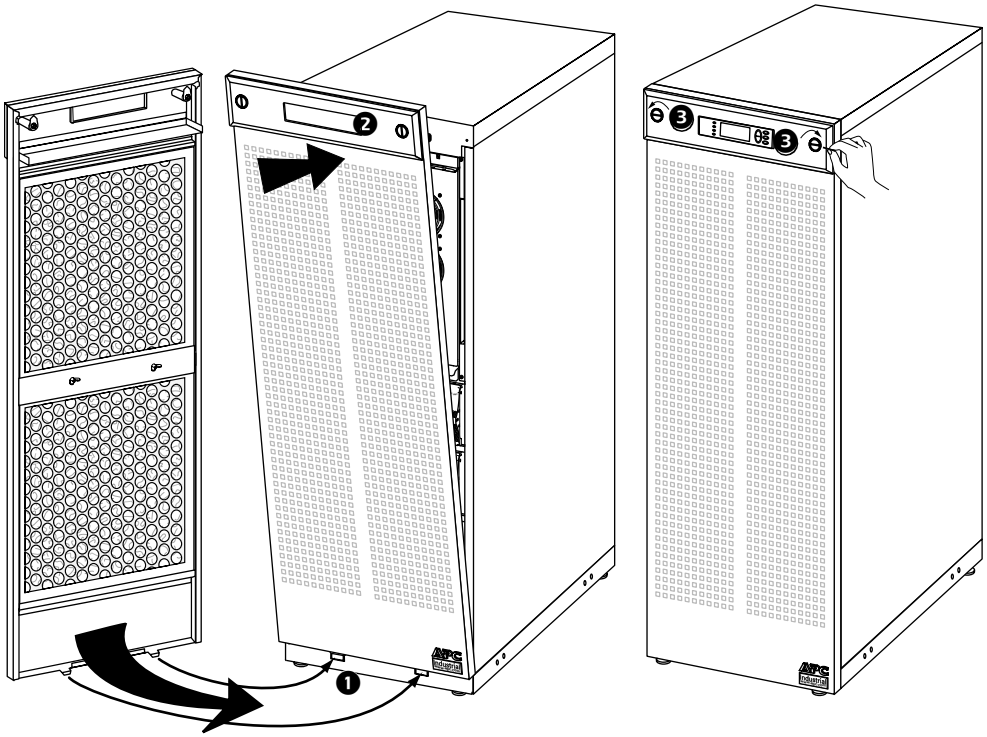

❶ To install a Front Panel, insert the two guide taps positioned at the bottom of the Front Panel into the two slots at the bottom of the Enclosure.

❷ Push the Front Panel against the Enclosure to engage the locking device at the top of the Enclosure.

❸ To secure the Front Panel, use a coin or similar to turn the 2 black lock devices on either side of the Display away from each other (left lock counterclockwise, right lock clockwise) to horizontal level.

Air Filter Inspection/Replacement

Air filter inspection

The UPS and XR Enclosure Front Panels are fitted with air filters on the inside of the Front Panels for extra protection of systems installed in environments with conductive dust. Check the air filters once a month. If the air filters show visible dust or other impurities, the air filters must be replaced.

Air filter part nos.	
Air filter for 13.85in Enclosures	ISVTOPT1
Air filter for 20.59in Enclosures	ISVTOPT2

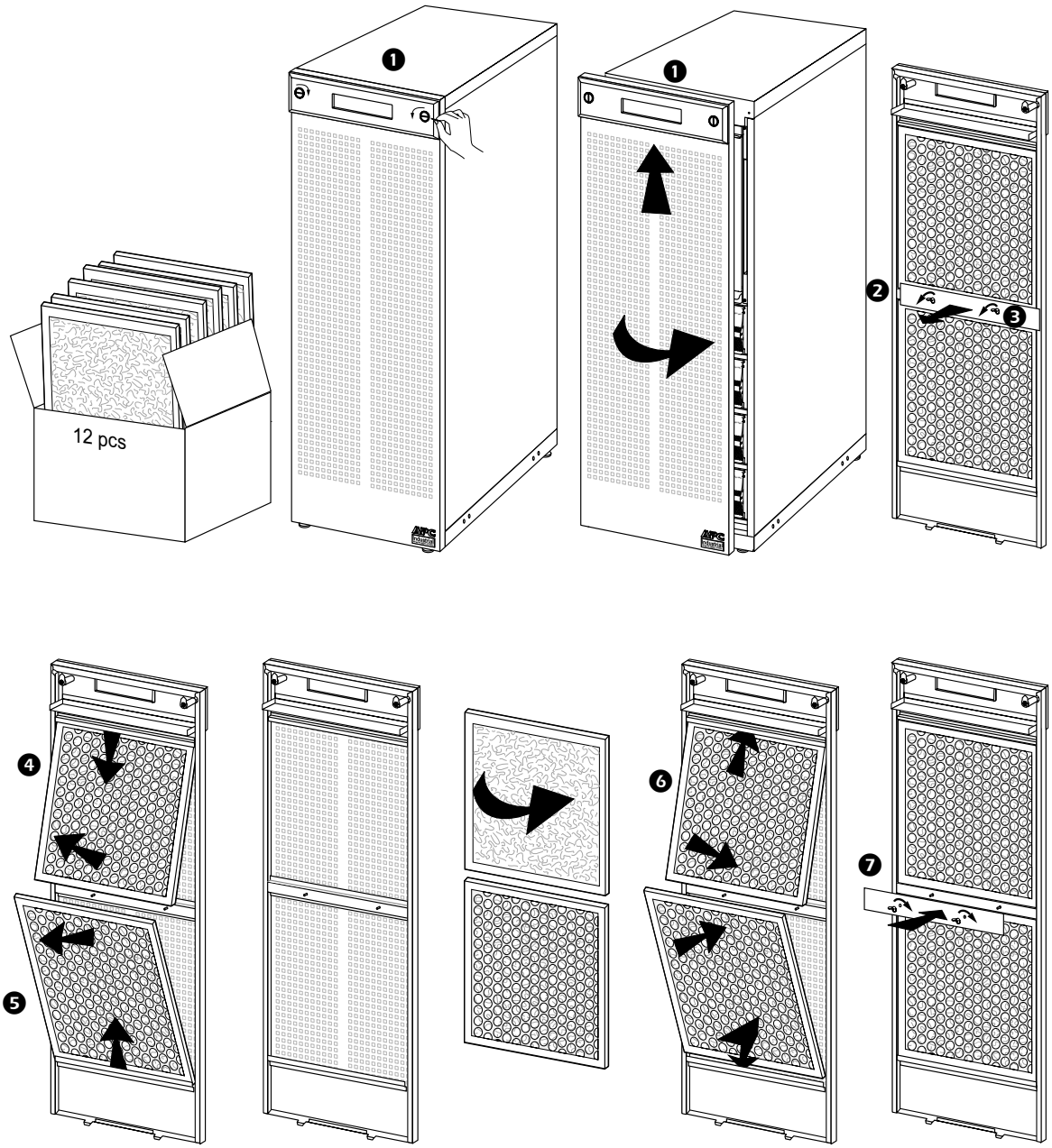

❶ Remove the Front Panel from the Enclosure.

For details on how to remove the Front Panel, see *Front Panel installation/removal in the Appendix.*.

❷ Remove the wing nuts from the plate between upper and lower air filter.

❸ Remove the plate.

❹ Push the top air filter downwards, and pull outwards to remove.

❺ Pull the lower air filter outwards, and push upwards to remove.

❻ Position the new air filters in the Front Panel, ensuring that the metal side of the air filters face outwards.

❼ Remount the plate between the upper and lower air filters and reattach the 2 wing nuts.

❽ Reinstall the Front Panel.

Battery Replacement

General safety prior to module replacement

WARNING!

- Only trained personnel familiar with the operation of the equipment, and the electrical and mechanical hazards involved, may install and remove system components.
- The UPS and Battery Enclosure contain an internal energy source. Hazardous voltage may be present even when disconnected from the power source. Follow *Total-Power-Off-Procedure* to completely de-energize the system.
- Never replace batteries when the UPS is running in battery mode!
- Risk of Energy Hazard, 96 V, 7.2 Ampere-hour battery. Before replacing batteries, remove all conductive jewelry such as chains, watches, and rings. High energy through conductive materials could cause severe burns.
- Batteries do not contain serviceable parts. Do not open.
- Do not open or mutilate batteries. Released material is harmful to the skin and eyes. It may be toxic. Do not dispose of batteries in a fire, as they may explode.
- To ensure continuous battery back-up, only replace one Battery Module at a time.
- For configurations that include customer-supplied external batteries, refer to manufacturer's battery installation and maintenance instructions.

Battery Module

One Battery Module consists of 4 Battery Units (shipping in the Enclosures).

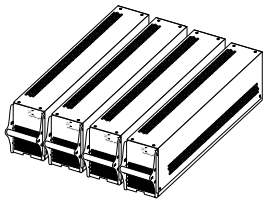

4 x 52.8lb / 4 x 24kg

Two people to lift components weighing between 40 - 70 lbs / 18 - 32 kg.

Removal of Battery Securing Brackets (if applicable)

If your system is equipped with Battery Securing Brackets, follow the below procedure to remove the Brackets.

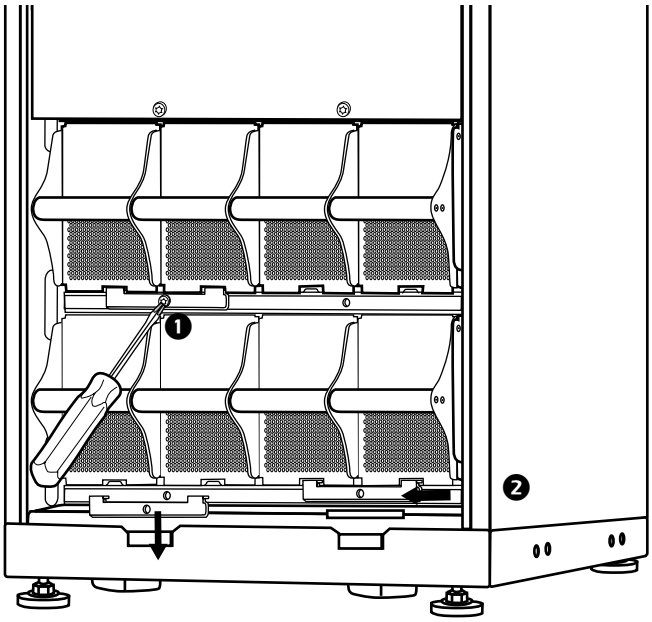

❶ Remove the M3 screw attaching the Battery Securing Bracket to the shelf.

❷ Push the Battery Securing Bracket to the left, push it upwards and remove.

Battery Module removal

Follow the below procedures if you need to change or add a Battery Module, e.g. if you receive a display message reporting a bad battery, or if you need to add batteries for increased runtime:

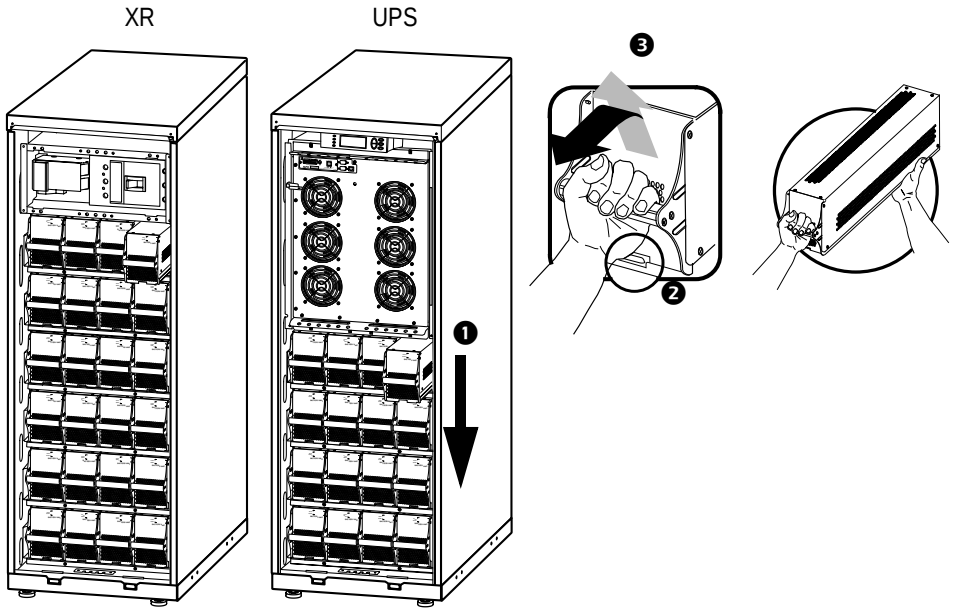

1. When removing Battery Modules, start from the highest level and work down.
2. Holding the battery handle, gently push the battery upwards and pull it halfway out of the Enclosure. A lock mechanism prevents it from being pulled all the way out.
3. To release the battery from the lock mechanism, one person gently pushes the battery upwards again and pulls it out, while the other person supports the battery.

How to install a Battery Module

If additional batteries are needed for extra run-time, or if you install battery replacement modules etc., follow the below procedure:

CAUTION!
Wait until you are ready to power up the system before installing Battery Modules in the UPS. Failure to do so can result in a deep discharge of the batteries and cause permanent damage (for 10-15kVA systems, the time from the battery installation time till the UPS is powered up should not exceed 72 hours or 3 days. For 20-30kVA systems, the time should not exceed 96 hours, or 4 days).

UPS / XR

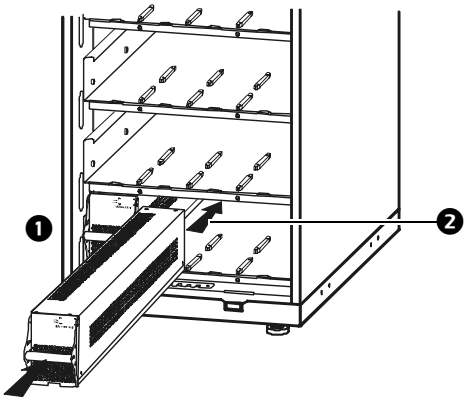

❶ Install the Battery Modules in the lowest available bay (4 across in 20inch/523mm UPS versions, 2 across in 14inch/351mm UPS versions).

❷ Position the Battery Unit to slide in between the grooves and push completely into the UPS to ensure connection.

Note

If a problem is reported, ensure that the modules in question are correctly installed. If the problem persists, refer to the *Troubleshooting* section of this guide.

Note

Allow for a 24-hour recharging period of the batteries after system start-up / battery replacement for battery monitoring data to become fully reliable.

Two people to lift components weighing between 40 - 70 lbs / 18 - 32 kg.

Network Management Card with Environmental Monitor

The APC Network Management Card with Environmental Monitor (AP9619) is installed in the UPS as default. It is used for remote system control and monitoring, e-mail notifications etc.

See also

For configuration and use, refer to the separate user manual - *Network Management Card with Environmental Monitor* - shipped with the UPS.

Network Management Card replacement

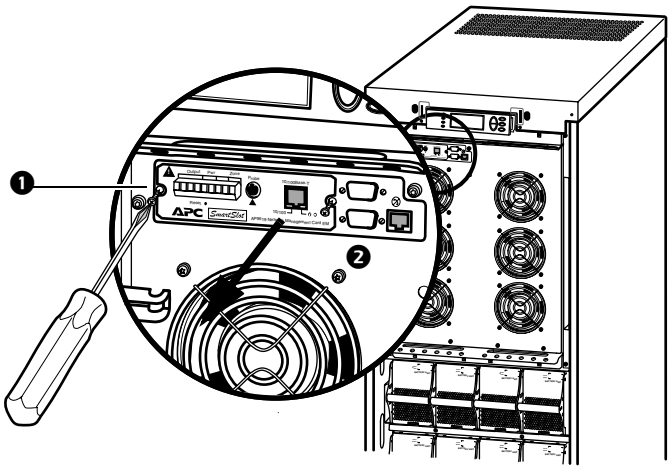

1. Loosen the 2 torx screws (one each side of the card).
2. Carefully pull out the card.

Reversed procedures for installation.

How to Obtain Replacement Parts

To obtain a replacement part, contact APC Customer Support (see rear cover).

1. In the event of a Battery Module failure, the display may show additional “fault list” screens. Press any key to scroll through these fault lists, record the information, and relay it to the APC representative.
2. If possible, call APC Customer Support from a telephone that is within reach of the UPS display interface so that you can gather and report additional information to the APC representative.
3. Be ready to provide a detailed description of the problem. Our representative will help you solve the problem over the telephone, if possible, or will give you a Return Material Authorization (RMA) number. If a module is returned to APC, this RMA number must be clearly printed on the outside of the package.
4. If the UPS is within the warranty period, or covered by an APC On-Site Service contract, there will be a charge for repair labor, parts and travel expenses. Please refer to the Limited Factory Warranty section. If it is not within the warranty period, there will be a charge for repair.

See *Factory Warranty* section for more information.

5. If the UPS is covered by an APC service contract, have that information available and give it to the representative.

Orderable parts

Description	**APC SKU No.**
AIS® 3000 Extended Run Enclosure/MCCB with 2 Battery Modules expandable to 6	ISVTBXR2B6S
AIS® 3000 Extended Run Enclosure/with 2 Battery Modules expandable to 6	ISVTXR2B6S
AIS® 3000 Battery Module	SYBT4
Network Management Card with Environmental Monitor	AP9619
Air filter (12 pcs) for 20.59in/523mm	ISVTOPT1
Air filter (12 pcs) for 13.85in/352mm	ISVTOPT2

Total-Power-Off Procedure

WARNING!

Risk of electric shock - parts inside the UPS and XR Enclosure are energized from the battery supply even when the AC power is disconnected. Before electrical installation begins, follow the Total-Power-Off procedure to completely de-energize the system.

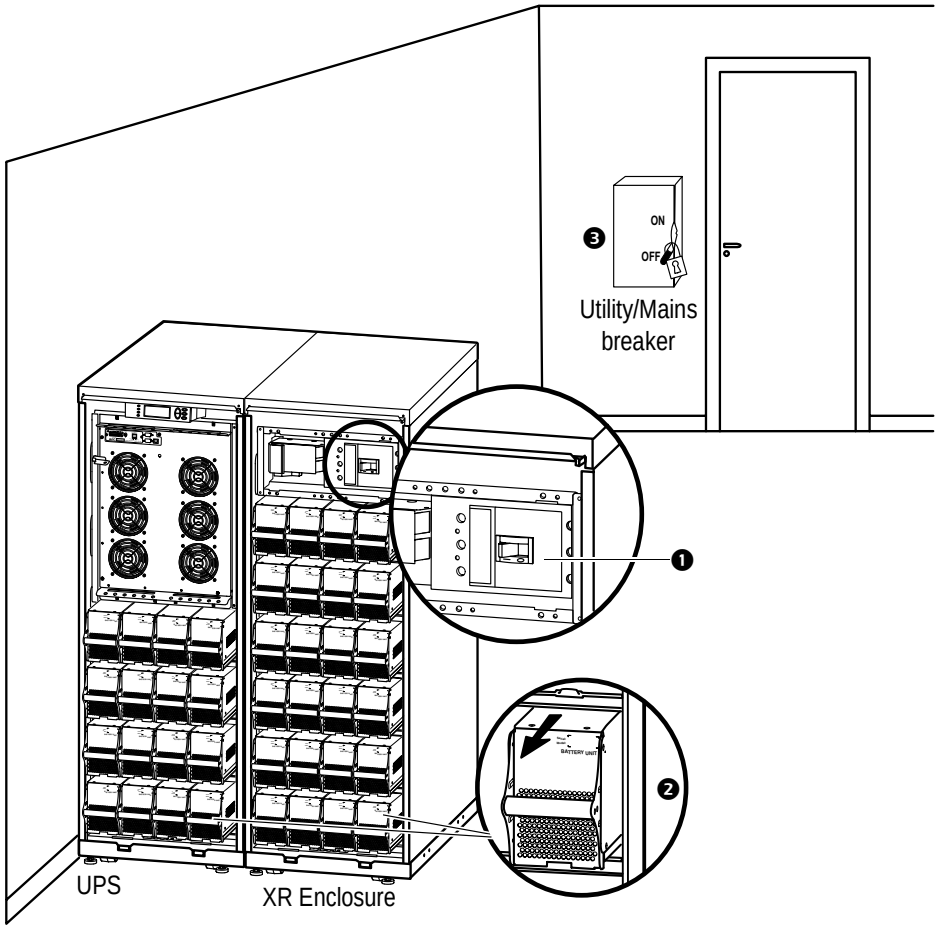

❶ Set the DC disconnect switch on the XR Enclosure (if available) to the OFF position.

❷ Remove all batteries from the system, or, alternatively, pull out all batteries to the red disconnect line shown on the battery. To ensure solid stability, do not pull batteries out beyond the red disconnect line unless completely removing them from the Enclosure.

❸ Set the utility/mains breaker to the OFF or LOCKED-OUT position. If the UPS has dual mains supply, set both supplies to the OFF or LOCKED-OUT position.

Refer to *Seismic Anchoring* in the Electrical Installation Manual for instructions on how to remove Seismic Battery Brackets (if applicable).

WARNING!
Correct lock-out procedures at utility/mains breaker must be followed. If necessary, install a padlock.

Display Messages/Troubleshooting

This section lists the status and alarm messages that the UPS might display. The messages are listed in alphabetical order, and a suggested corrective action is listed with each alarm message to help you troubleshoot problems.

Display messages

Display message	Meaning	Corrective action
Automatic Self Test Started.	The UPS has started pre-programmed battery test.	No corrective action necessary.
Batt Temperature Exceeded Upper Limit.	The temperature of one or more battery units has exceeded system specifications.	Contact APC Customer Support. See rear cover.
Battery over-voltage warning.	The battery voltage is too high and the charger has been deactivated.	Contact APC Customer Support. See rear cover.
Bypass Not Available Input Freq/Volt Out Of Range.	The frequency or voltage is out of acceptable range for bypass. This message occurs when the UPS is online, and indicates that the bypass mode may not be available if required.	Correct the input voltage to provide acceptable voltage or frequency.
Discharged Battery	The UPS is in battery operation and the battery charge is low. Note: Runtime is limited in duration.	No corrective action necessary. Shut down the system and the load equipment or restore incoming voltage.
Emergency PSU Fault.	Redundant Emergency Power Supply Unit (PSU) is not working. The UPS will continue to work normally, but the PSU should be replaced.	Contact APC Customer Support. See rear cover.
EPO Activated.	Emergency Power Off Switch has been activated.	Deactivate Emergency Power Off Switch.
Fan fault.	A fan has failed.	Contact APC Customer Support. See rear cover.
Int. Mech. Bypass Switch Closed.	The internal mechanical switch gear is closed.	No corrective action necessary. The UPS is in internal mechanical bypass operation.
Int. Mech. Bypass Switch Open.	The internal mechanical switch gear is open.	No corrective action necessary.
Low-Battery.	The UPS is in battery operation and the battery charge is low. Note: Runtime is limited in duration.	Shut down the system and the load equipment or restore incoming voltage.

Display message	Meaning	Corrective action
Load Is No Longer Above Alarm Threshold.	The load previously exceeded the alarm threshold and the situation has been corrected either because the load decreased or the threshold was increased.	No corrective action necessary.
Load Power Is Above Alarm Limit.	The load has exceeded the user-specified load alarm threshold.	**Option 1**: Use the display interface to raise the alarm threshold. **Option 2**: Reduce the load.
Mains Not Available. Input Freq/Volt Out of Range.	The frequency or voltage is out of acceptable range for normal operation.	Correct the input voltage to provide acceptable voltage or frequency.
Min Runtime Restored.	The system runtime dropped below the configured minimum and has been restored. Additional Battery Modules were installed, the existing Battery Modules were recharged, the load was reduced, or the threshold was decreased.	No corrective action necessary.
No Batteries Are Connected.	No battery power is available.	Check that batteries are inserted properly.
Number of Battery Modules Decreased.	One or more battery modules removed.	No corrective action necessary.
Number of Battery Modules Increased.	One or more battery modules are added.	No corrective action necessary.
Replace Batt(s).	One or more Battery Modules need replacement	Refer to Module Replacement section for procedures.
Runtime Is Below Alarm Threshold.	The predicted runtime is lower than the user-specified minimum runtime alarm threshold. Either the battery capacity has decreased, or the load has increased.	**Option 1:** Allow the battery modules to recharge. **Option 2:** If possible, increase the number of battery modules. **Option 3:** Reduce load. **Option 4**: Decrease alarm threshold. Contact APC Customer Support. See rear cover.
Site Wiring Fault.	Wrong phase rotation on the input side. The UPS will continue to supply conditioned power, but bypass is unavailable.	An electrician should check that the UPS has been wired properly.
Shutdown Due To Low Battery.	The UPS was in Battery Operation and shut down the load when no more battery power was available.	No corrective action necessary. Note: If the problem reoccurs, consider increasing the battery capacity.
Static Bypass Switch Fault.	The Static Bypass Switch has failed.	Contact APC Customer Support. See rear cover.

Display message	Meaning	Corrective action
System Failure Detected by Surveillance.	The system has detected an internal error.	Check for other alarms and contact APC customer support if problem persists.
System Start Up Configuration Failed.	System configuration error. Unable to determine system voltage and/or Enclosure size.	Check for other alarms and contact APC customer support if problem persists.
System Not Synchronized to Bypass.	System cannot synchronize to bypass. Mode may not be available.	**Option 1**: Decrease the input frequency sensitivity. Contact APC Customer Support (see rear cover). **Option 2**: Correct the bypass input voltage to provide acceptable voltage on frequency.
UPS In Bypass Due To Fault.	The UPS has transferred to Bypass Mode because a fault has occurred.	Contact APC Customer Support (see rear cover).
UPS In Bypass Due To Overload.	The load exceeded the power capacity. The UPS has switched to Bypass Mode.	Decrease the load.
UPS Is Overloaded.	The load exceeded the system power capacity.	**Option 1:** Decrease the load. **Option 2:** Check the load distribution on the 3 phases via the display. If the load is unevenly distributed, adjust the load distribution.
Weak Batt(s) Detected. Reduced Runtime.	One or more weak batteries detected.	Replace the weak batteries.
XR Battery Breaker Open, or Fuse Blown.	The external DC disconnect switch tripped. Battery power is not available or the runtime is lower than expected.	Activate the external DC Disconnect Switch or replace blown fuse in XR Enclosure (only applicable if your installation includes an XR Enclosure).

If a problem persists, note UPS model #, serial #, and date purchased before calling APC Customer Support (Type label located on rear cover, bottom section).

Mechanical Bypass

Mechanical Bypass Lever

For increased availability, the UPS is equipped with an internal mechanical bypass system providing utility power directly to the output, bypassing all UPS electronics.

CAUTION!
The load is not protected by the UPS when the internal mechanical bypass system is active, and, the power is not conditioned.

Turn into mechanical bypass

Note

If the UPS is running and controllable through the display, carry out steps 1 through 6. If not, go directly to step 4.

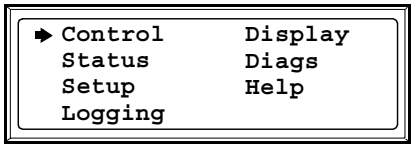

Main Menu

1. From the main menu, select *Control* and press ENTER
2. Use UP/DOWN key to navigate to *UPS into Bypass* and press ENTER
3. Use UP/DOWN key to navigate to *YES, confirm UPS into bypass*, and press ENTER
4. Remove UPS Front Panel

See *Front Panel Installation* and follow the instructions in reversed order.

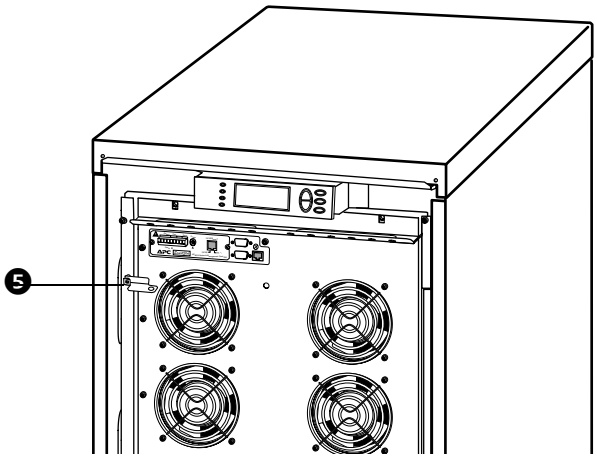

❺ Turn the Mechanical Bypass Lever upwards to activate the internal mechanical bypass switch.

❻ Reinstall the Front Panel

The load will now be supported directly by utility power.

Turn into normal operation (from bypass operation)

CAUTION!
Never attempt to switch back the UPS into normal operation till you have verified there are no internal UPS faults. Call APC Customer Support (see rear cover of this manual) before switching back to normal operation.

❶ Verify the presence of utility supply

❷ Turn the Mechanical Bypass Lever downwards (yellow BYPASS LED will switch off)

The green LOAD ON LED is now on, and the UPS is back in normal operation.

Maintenance Bypass Panel

Operation procedure

The Maintenance Bypass Panel (MBP) can be used to completely isolate the UPS in the event of an internal UPS fault.

MBP (wall-mounted)

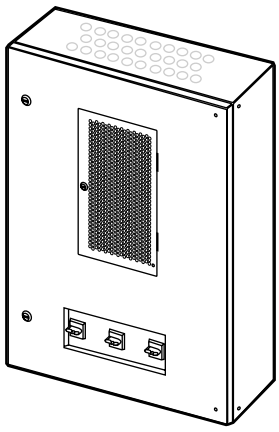

See also

To carry out this procedure, refer to the product-specific manual supplied with the Maintenance Bypass Panel.

LIMITED FACTORY WARRANTY

The limited warranty provided by American Power Conversion Corporation ("APC") in this Statement of Limited Factory Warranty applies only to Products you purchase for your commercial or industrial use in the ordinary course of your business.

APC product covered

AIS® 3000 and AIS® 3000 Extended Run Battery Enclosure

Terms of warranty

APC warrants that the Product shall be free from defects in materials and workmanship for a period of one (1) year from the date of start-up when APC authorized service personnel performed the start-up of the Product, or a maximum of 18 months from the date of Product shipment from APC, when APC authorized service personnel have not performed the start-up of the Product ("Warranty Period"). In the event that the Product fails to meet the foregoing warranty, APC shall repair or replace any defective parts, such repair or replacement to be without charge for on-site labor and travel if APC authorized personnel have conducted start-up of the Product. An APC Start-Up Service must be performed/completed by APC authorized service personnel or replacement of defective parts only will be covered. APC shall have no liability and no obligation to repair the installed Product if non-authorized personnel performed the start-up and such start-up caused the Product to be defective. Any parts furnished under this warranty may be new or factory-remanufactured. **Repair or replacement of a defective product or part thereof does not extend the original warranty period.**

Non-transferable warranty extends to first purchaser for use

This Warranty is extended to the first person, firm, association or corporation (herein referred to by "You" or "Your") for whom the APC Product specified herein has been purchased. This Warranty is not transferable or assignable without the prior written permission of APC.

Assignment of warranties

APC will assign to you any warranties which are made by manufacturers and suppliers of components of the APC Product and which are assignable. Any such warranties are assigned "AS IS" and APC makes **no representations** as to the effectiveness or extent of such warranties, assumes NO RESPONSIBILITY for any matters which may be warranted by such manufacturers or suppliers and extends no coverage under this Warranty to such components.

Drawings, descriptions

APC warrants for the Warranty Period and on the terms of the Warranty set forth herein that the APC Product will substantially conform to the descriptions contained in the APC Official Published Specifications or any of the drawings certified and agreed to by an authorized APC representative, if applicable thereto ("Specifications"). It is understood that the Specifications are **not warranties of performance** and **not warranties of fitness for a particular purpose**.

Warranty claims procedure

To obtain service under Warranty, contact APC Customer Support (see rear cover).You will need the model number of the Product, the serial number, and the date purchased. A technician will ask you to describe the problem. If it is determined that the Product will need to be returned to APC you must obtain a returned material authorization (RMA) number from APC Customer Support. Products that must be returned must have the RMA number marked on the outside of the package, and be returned with transportation charges prepaid. If it is determined by APC Customer Support that on-site repair of the Product is allowed, APC will arrange to have APC authorized service personnel dispatched to the Product location to repair or replace the Product at the discretion of APC.

Exclusions

APC shall not be liable under the Warranty if its testing and examination discloses that the alleged defect in the product does not exist or was caused by your or any third person's misuse, negligence, improper installation or testing, unauthorized attempts to repair or modify, or any other cause beyond the range of the intended use, or by accident, fire, lightning or other hazard.

THERE ARE NO WARRANTIES, EXPRESSED OR IMPLIED, BY OPERATION OF LAW OR OTHERWISE, OF PRODUCTS SOLD, SERVICED OR FURNISHED UNDER THIS AGREEMENT OR IN CONNECTION HEREWITH. APC DISCLAIMS ALL IMPLIED WARRANTIES OF MERCHANTABILITY, SATISFACTION AND FITNESS FOR A PARTICULAR PURPOSE. THE APC EXPRESS WARRANTIES WILL NOT BE ENLARGED, DIMINISHED, OR AFFECTED BY AND NO OBLIGATION OR LIABILITY WILL ARISE OUT OF APC RENDERING TECHNICAL OR OTHER ADVICE OR SERVICE IN CONNECTION WITH THE PRODUCTS. THE FOREGOING WARRANTIES AND REMEDIES ARE EXCLUSIVE AND IN LIEU OF ALL OTHER WARRANTIES AND REMEDIES. THE WARRANTIES SET FORTH ABOVE, CONSTITUTE SOLE LIABILITY OF APC AND YOUR EXCLUSIVE REMEDY FOR ANY BREACH OF SUCH WARRANTIES. THE WARRANTIES EXTEND ONLY TO YOU AND ARE NOT EXTENDED TO ANY THIRD PARTIES.

IN NO EVENT SHALL APC, ITS OFFICERS, DIRECTORS, AFFILIATES OR EMPLOYEES BE LIABLE FOR ANY FORM OF INDIRECT, SPECIAL, CONSEQUENTIAL OR PUNITIVE DAMAGES ARISING OUT OF THE USE, SERVICE OR INSTALLATION OF THE PRODUCTS, WHETHER SUCH DAMAGES ARISE IN CONTRACT OR TORT, IRRESPECTIVE OF FAULT, NEGLIGENCE OR STRICT LIABILITY OR WHETHER APC HAS BEEN ADVISED IN ADVANCE OF THE POSSIBILITY OF SUCH DAMAGE.

Appendix

UPS Components and Options

13.85in/352mm Enclosures

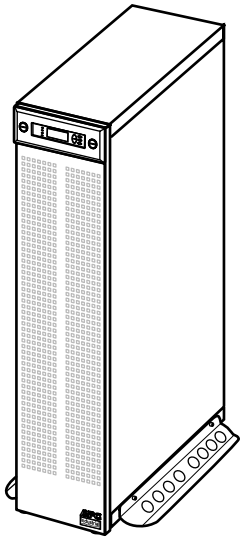

Front view

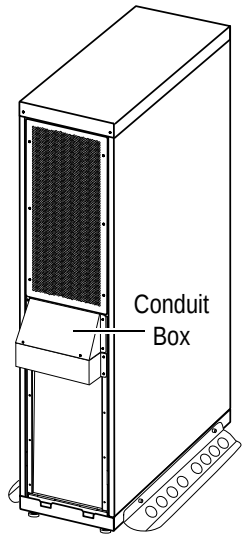

Rear view

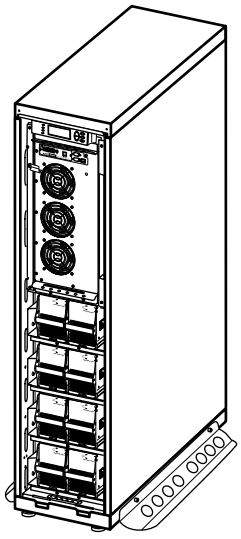

Front view without cover
10-15kVA

20.59in/523mm Enclosures

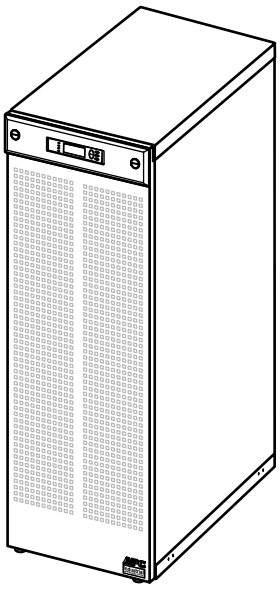

Front view

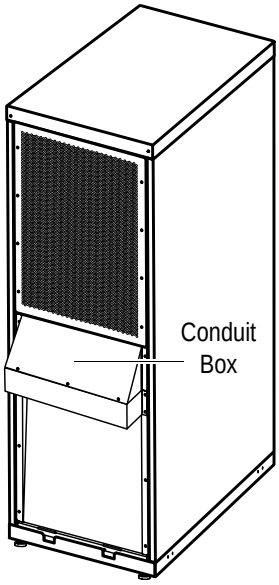

Rear view

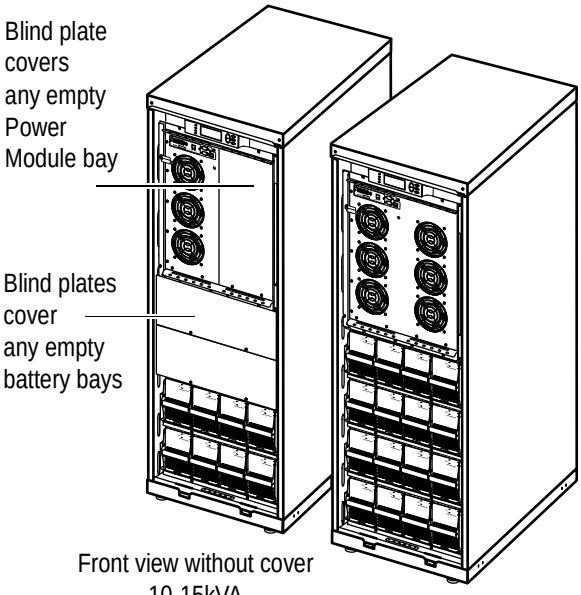

Front view without cover
10-15kVA

Front view without cover
20-30kVA

System sizes, part nos., number of Battery Modules and weights

Height (identical for all Enclosure sizes)	58.66in/1490mm
Depth (identical for all Enclosure sizes)	33.62in/854mm

System Size/ Enclosure width		Installed weight			Installed weight	
	APC Part No.	lbs	kg	APC Part No.	lbs	kg
10kVA 13.85in/352mm	ISVT10KF1B2S	678.8	308.7	ISVT10KF2B2S	889.9	404.7
10kVA 20.59in/523mm	ISVT10KF1B4S	759.4	345.4	ISVT10KF2B4S	970.5	441.4
10kVA 20.59in/523mm	ISVT10KF3B4S	1181.6	537.4	ISVT10KF4B4S	1392.7	633.4
15kVA 13.85in/352mm	ISVT15KF2B2S	889.9	404.7			
15kVA 20.59in/523mm	ISVT15KF2B4S	970.5	441.4	ISVT15KF3B4	1181.6	537.4
15kVA 20.59in/523mm	ISVT15KF4B4S	1392.7	633.4			
20kVA 20.59in/523mm	ISVT20KF2B4S	1037.9	472.0	ISVT20KF3B4S	1249.0	568.0
20kVA 20.59in/523mm	ISVT20KF4B4S	1460.1	664.0			
30kVA 20.59in/523mm	ISVT30KF3B4S	1251.2	569.0	ISVT30KF4B4S	1462.3	665.0

Part number coding:

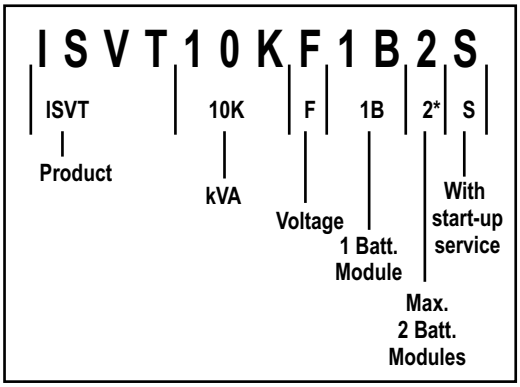

*) 4 = max. 4 Battery Modules

Battery Module

One Battery Module consists of 4 Battery Units (shipping in the UPS Enclosure).

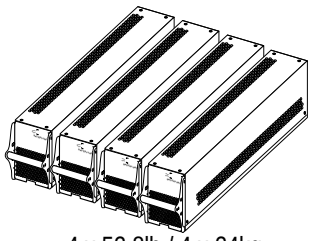

4 x 52.8lb / 4 x 24kg

Conduit Box

Conduit Box for 20.59in/523mm Enclosure

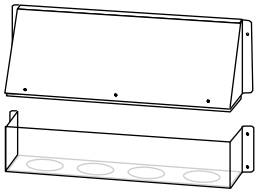

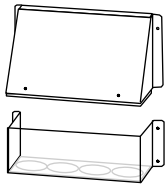

Conduit Box for 13.85in/352mm Enclosure

Front Panel overview

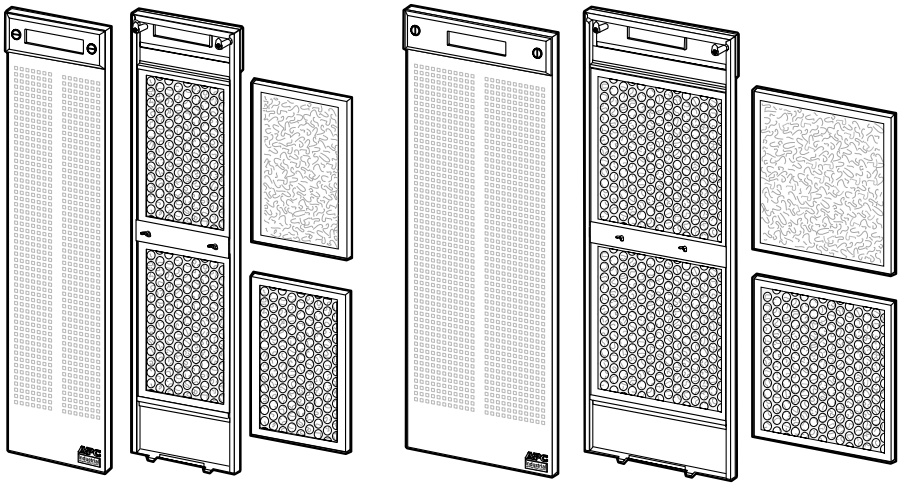

Front Panel for 13.85in/ 352mm Enclosure

13.85in/ 352mm Enclosure from rear with filters

Filter seen from front and rear

Front Panel for 20.59in/ 523mm Enclosure

20.59in/ 523mm Enclosure from rear with filters

Filter seen from front and rear

Front Panel attachment procedure described in the *Front Panel* section.

Stabilizing Bracket

Always install the Stabilizing Brackets on the 13.85in/352mm Enclosure (shipped with the UPS) to enhance the stability of the Enclosure.

Note

In non-seismic areas, it is not necessary to bolt the Stabilizing Bracket to the floor. Attach the Stabilizing Bracket to the UPS Enclosure only, re-using the screws used to secure the UPS to the pallet during shipment.

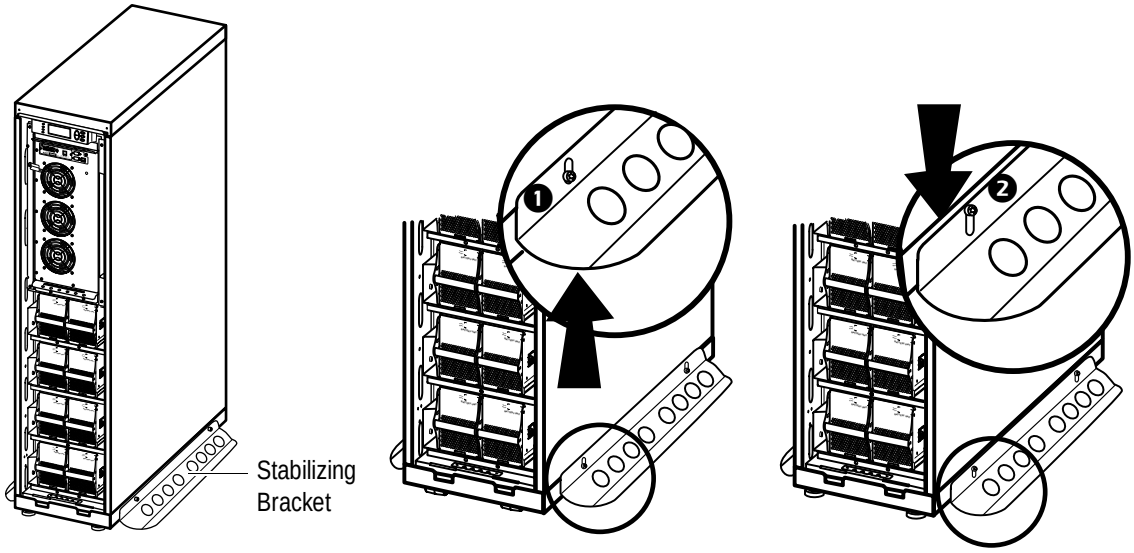

If the Enclosure needs to be moved after Stabilizing Brackets have been attached to the Enclosure, the Stabilizing Brackets must be pushed up into their high position.

1. Loosen the two screws of both Stabilizing Brackets, and push the bracket up into the high position.
2. When the Enclosure has reached its new position, push the Bracket into its “down” position again, and tighten the screws.

WARNING!
For stability reasons, do not remove Stabilizing Brackets from 13.85in/352mm Enclosures.

User interface

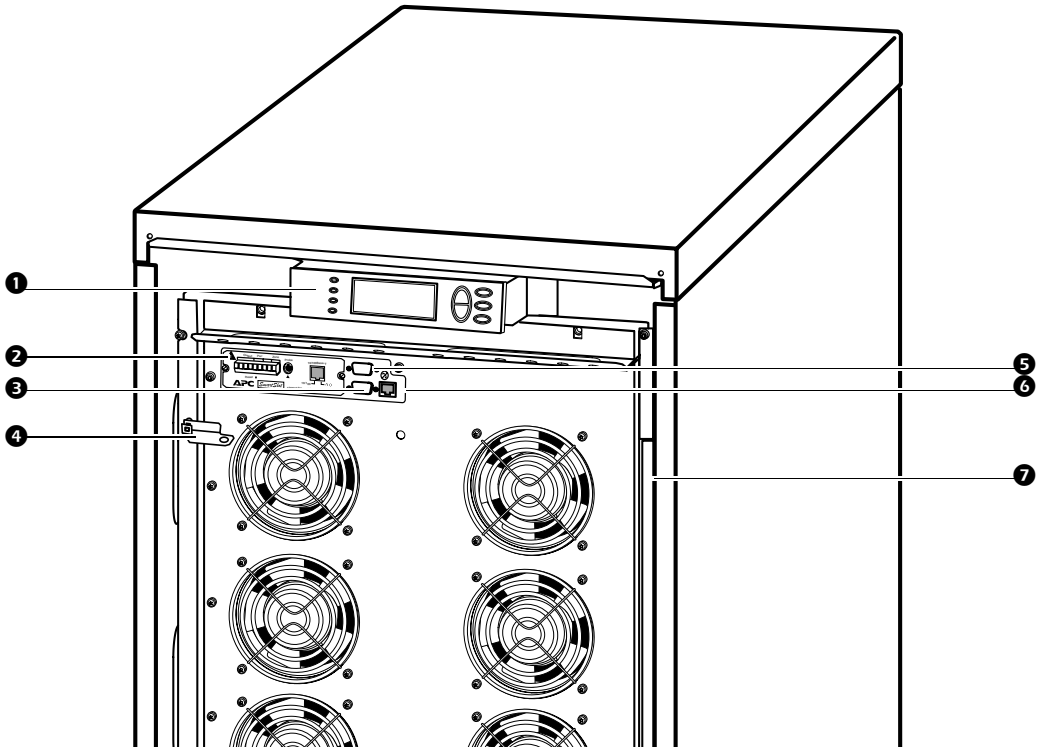

1. Display: user-control interface used to configure the functionality, monitor the system, set alarm thresholds, and to provide audible and visual alarms.
2. Network Management Card with Environmental Monitor (AP9619): used for remote system control and monitoring, e-mail notifications etc. See separate manual for the AP9619.
3. Computer-interface port for the connection of computers with APC Powerchute® software.
4. Mechanical bypass lever: used to bypass the upstream utility power around the UPS to support the load directly = internal mechanical bypass operation.
5. Service port (for APC maintenance personnel only).
6. Display port for the connection of display communication cable.
7. Documentation storage.

Extended Run Battery Enclosure (XR Enclosure) and Battery Module

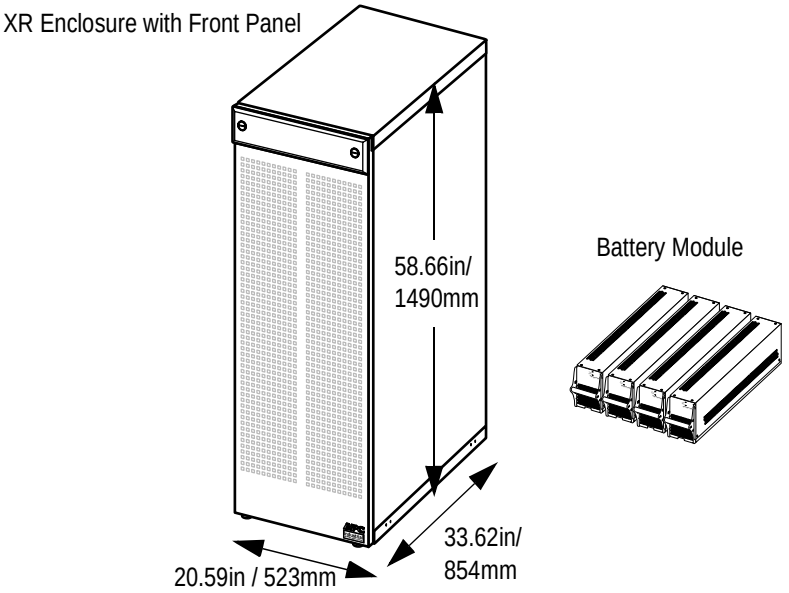

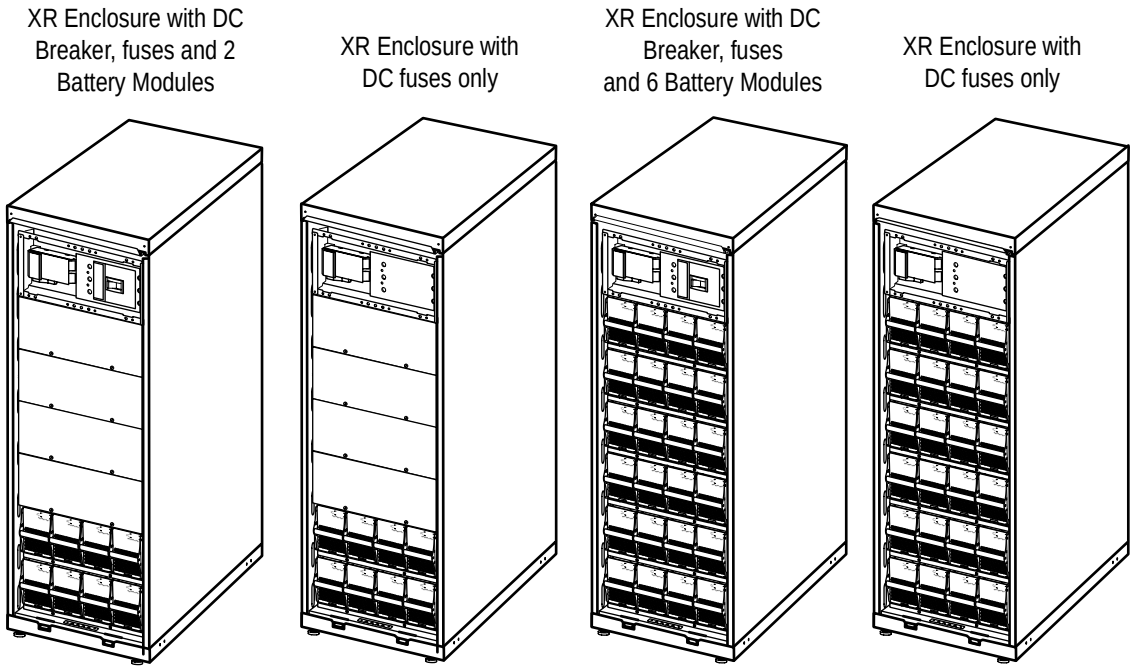

XR Enclosure weights:	
2 Battery Modules	903.3lbs / 410.8kg
6 Battery Modules (4 of the modules are shipped separately on a pallet)	1747.8lbs / 794.8kg

Battery Module weight	
4 units = 1 Battery Module	4x52.8lb / 4x24kg

Part Numbers for XR Enclosures

XR Enclosure	
Enclosure with 2 Battery Modules (expandable to 6), and DC breaker:	ISVTBXR2B6S
Enclosure with 2 Battery Modules (expandable to 6), without DC breaker:	ISVTXR2B6S
Enclosure with 6 Battery Modules, and DC breaker:	ISVTBXR6B6S
Enclosure with 6 Battery Modules, without DC breaker	ISVTXR6B6S

Part Number for Battery Module

Battery Module	
Battery Module	SYBT4

Maintenance Bypass Panels with Power Distribution Capability

Note

Further details on APC Maintenance Bypass Panel (MBP) with Power Distribution Capability are available on www.apc.com.

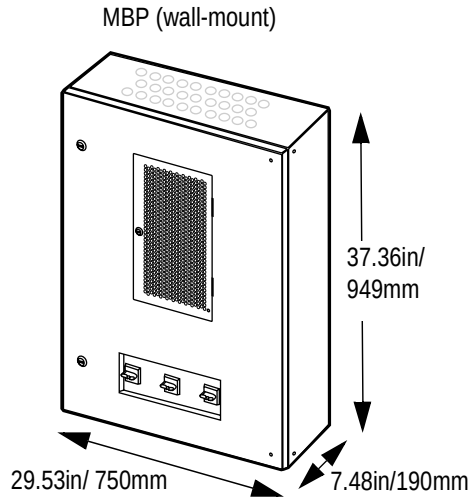

The Maintenance Bypass Panel provides overcurrent protection to the entire UPS system. It is also used to bypass the utility power around the UPS instead of through the system, e.g. when UPS maintenance is carried out.

Floor anchoring and battery securing equipment

In seismic areas, each Battery Module must be secured with a Battery Securing Bracket.

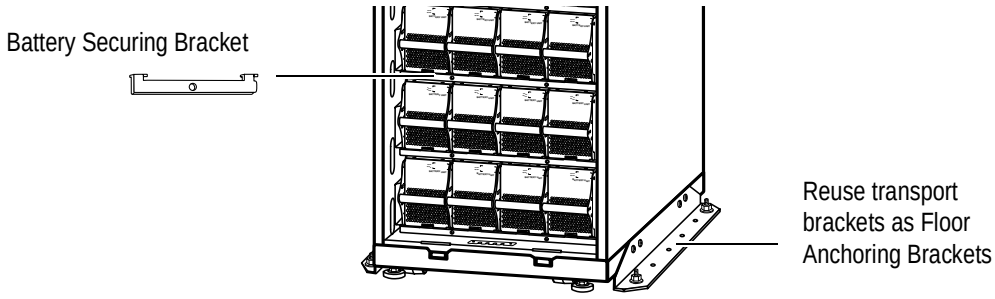

Note Floor-anchoring bolts are not provided with the UPS. Purchase the floor anchors locally.

Note For more details on optional APC equipment for the AIS® 3000, contact APC Technical Support in the U.S. at 800-555-2725. For other countries, see technical support numbers on rear cover.

www.apc.com

APC Worldwide Customer Support

Customer support for this or any other APC product is available at no charge in any of the following ways:

- Visit the APC Web site to access documents in the APC Knowledge Base and to submit customer support requests.
  - **www.apc.com** (Corporate Headquarters)

    Connect to localized APC Web sites for specific countries, each of which provides customer support information.
  - **www.apc.com/support/**

    Global support searching APC Knowledge Base and using e-support.
- Contact an APC Customer Support center by telephone or e-mail.
  - Regional centers:

Direct InfraStruXure Customer Support Line	(1)(877)537-0607 (toll free)
APC headquarters U.S., Canada	(1)(800)800-4272 (toll free)
Latin America	(1)(401)789-5735 (USA)
Europe, Middle East, Africa	(353)(91)702000 (Ireland)
Japan	(0) 35434-2021
Australia, New Zealand, South Pacific area	(61) (2) 9955 9366 (Australia)

  - Local, country-specific centers: go to **www.apc.com/support/contact** for contact information.

Contact the APC representative or other distributor from whom you purchased your APC product for information on how to obtain local customer support.

Entire contents © 2004 American Power Conversion. All rights reserved. Reproduction in whole or in part without permission is prohibited. APC, the APC logo, and AIS 3000 are trademarks of American Power Conversion Corporation and may be registered in some jurisdictions. All other trademarks, product names, and corporate names are the property of their respective owners and are used for informational purposes only.

990-1962

11/2004