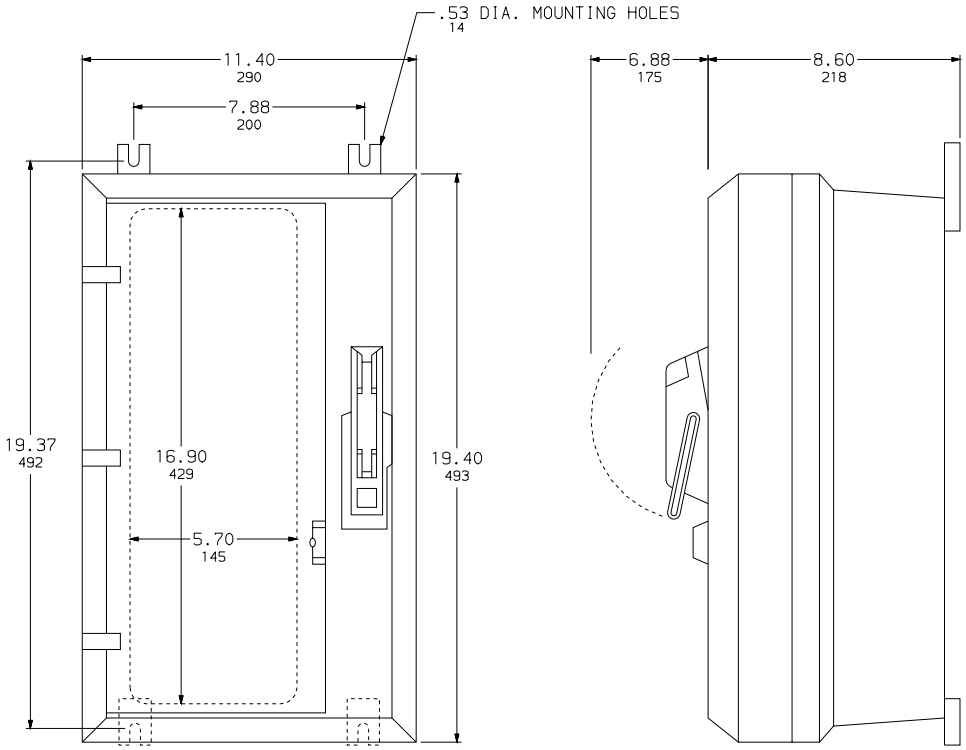

WIRING DIAGRAMS	
FUSIBLE	NOT FUSIBLE
A	B

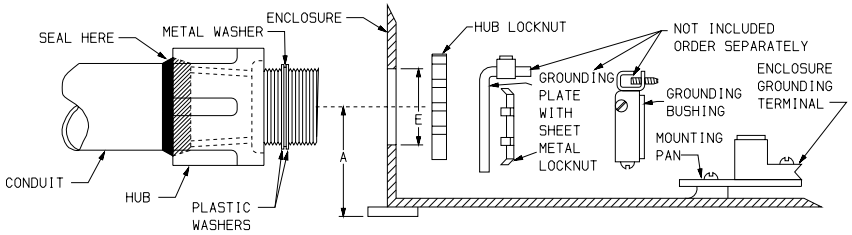

TERMINAL LUGS ‡			
AMPERES	MAX. WIRE	MIN. WIRE	TYPE
30	#4 AWG	#14 AWG	AL OR CU

CAUTION:
NONMETALLIC ENCLOSURE DOES NOT PROVIDE GROUNDING BETWEEN CONDUIT CONNECTIONS OR BETWEEN CONDUIT AND INTERNAL METALLIC SWITCH PARTS.
USE UL LISTED GROUNDING TYPE BUSHING OR GROUNDING PLATE AND CONNECT WITH JUMPER WIRE TO ENCLOSURE GROUNDING TERMINAL.

DUAL DIMENSIONS: INCHES / MILLIMETERS

CATALOG NUMBER	VOLTAGE RATINGS	AMP. RATING	WIRING DIAG.	HORSEPOWER RATINGS													HUBS PROVIDED FOR FIELD INSTALLATION				ENCLOSURE HOLE SIZE DIMENSION E		MINIMUM HUB CENTERLINE DIMENSION A	
				120 VAC	240			480VAC			600VAC		125 VDC ◆	250 VDC ◆	600VDC ◆		HUB NO.	NUMBER INCLUDED	HUB SIZE					
				MAX.	STD.	MAX.		STD.	MAX.		STD.	MAX.												
				1Ø	3Ø	1Ø	3Ø	3Ø	1Ø	3Ø	3Ø	3Ø	MAX.	MAX.	STD.	MAX.			IN	MM	IN	MM	IN	MM
H361DX	600VAC;600VDC	30	A	–	3	–	7.5	5	–	15	7.5	20	–	–	10	15	NHUB2	2	0.75	19	1.12	28	1.75	45
HU361DX	600VAC;600VDC	30	B	3■	–	5■	10	–	10■	20	–	30	3	10	–	15	NHUB2	2	0.75	19	1.12	28	1.75	45

NOTES: UL LISTED - FILE E2875
SUITABLE FOR USE AS SERVICE EQUIPMENT.
◆ FOR DC RATING, USE LEFT AND RIGHT SWITCHING POLES.
■ FOR SINGLE PHASE USE LEFT AND RIGHT SWITCHING POLES.
SHORT CIRCUIT CURRENT RATINGS:
10,000 AMPERES WITH CLASS H OR K FUSES. 200,000 AMPERES WITH CLASS J OR R FUSES.
‡ LUGS SUITABLE FOR 60°C AND 75°C ALUMINUM OR COPPER CONDUCTORS.

HEAVY DUTY SAFETY SWITCHES
VISIBLE BLADE TYPE
30 AMPERE
ENCLOSURE - NEMA TYPE 4X
FIBERGLASS REINFORCED POLYESTER

SQUARE D COMPANY

DWG. NO. 1895