EcoStruxure Energy Asset Controller

en User Guide

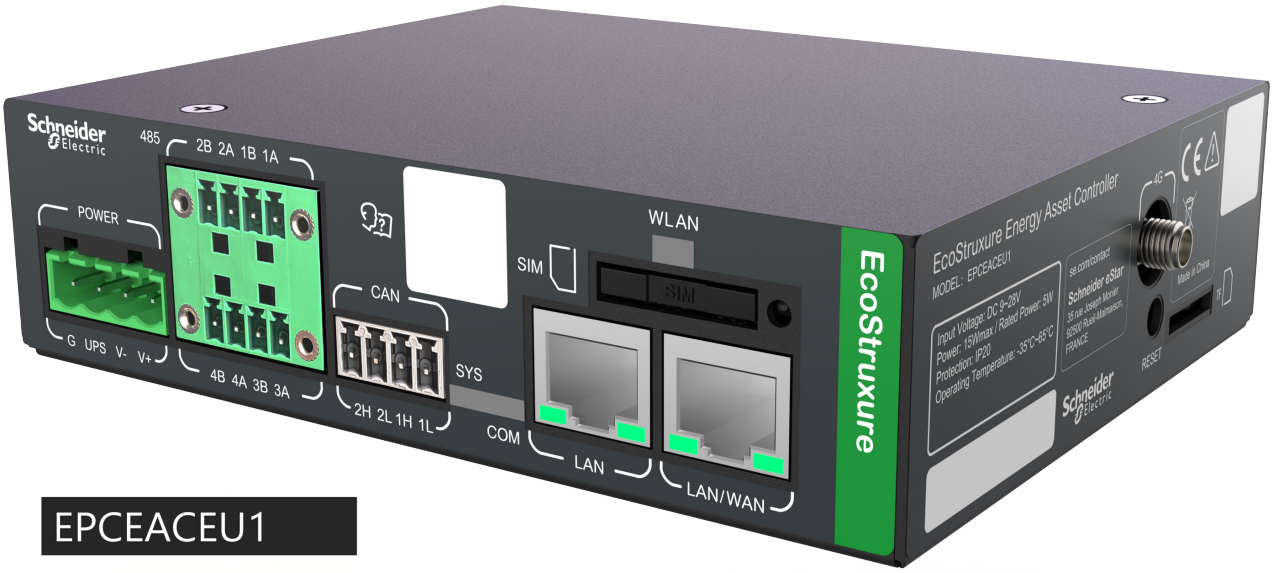

EPCEACEU1

EPCEACACCEU1

Customer Care Center

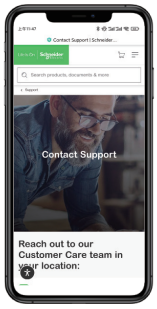

Legal Information 3
Contact Information 3
Information About Your System 3
Information on Non-Inclusive or Insensitive Terminology 3
Validity Note 3
Safety Information 3
Audience 4
About Scope 5
Abbreviations and Acronyms 5
Safety Information 5
Important Information 6
1 Overview 7
1.1 EcoStruxure Energy Asset Controller external view 7
1.2 Dimensions of the EcoStruxure Energy Asset Controller 7
1.3 Main functions of the EcoStruxure Energy Asset Controller 8
1.4 System Connection Diagram 8
2 Pre-installation Inspection 9
2.1 Required Tools and Materials 9
2.2 Maintenance Distance 10
3 Installation 11
3.1 Mount the Controller 11
4 Connecting 12
4.1 Interface definition 12
4.2 Install the Protective Earth (PE) cable 13
4.3 Install the power wiring 13
4.4 Install the 485 communication wiring 14
4.5 Install the CAN communication wiring 14
4.6 Install the Ethernet wiring 15
4.7 Install the SIM card and 4G antenna 16
5 Commissioning Checklist 18
5.1 Physical inspections 18
5.2 Commission the system 18
6 Operation 19
6.1 System main functions 19
6.2 LED Indicators 19
7 Startup/Shutdown 20
7.1 Startup 20
7.2 Shutdown 20
8 Troubleshooting 20
9 Maintenance 21
9.1 Turn off the Controller 21
9.2 Routine maintenance 21
10 Disassembling and Decommissioning 22
11 Recycle 22
12 Specifications 22
13 List of the Energy Asset Controller accessory kit(CR: EPCEACACCEU1) 23

Legal Information

The Schneider Electric brand and any trademarks of Schneider Electric SE and its subsidiaries referred to in this guide are the property of Schneider Electric SE or its subsidiaries.
All other brands may be trademarks of their respective owners.
This guide and its content are protected under applicable copyright laws and furnished for informational use only.
No part of this guide may be reproduced or transmitted in any form or by any means (electronic, mechanical, photocopying, recording, or otherwise), for any purpose, without the prior written permission of Schneider Electric.
Schneider Electric does not grant any right or license for commercial use of the guide or its content, except for a non-exclusive and personal license to consult it on an "as is" basis.
Schneider Electric products and equipment should be installed, operated, serviced, and maintained only by qualified personnel.
As standards, specifications, and designs change from time to time, information contained in this guide may be subject to change without notice. To the extent permitted by applicable law, no responsibility or liability is assumed by Schneider Electric and its subsidiaries for any errors or omissions in the informational content of this material or consequences arising out of or resulting from the use of the information contained herein.

Contact Information

For country-specific details, please contact your local Schneider Electric Sales Representative or visit the Schneider Electric website at: https://www.se.com/

Information About Your System

As soon as you open your product, inspect the contents and record the following information and be sure to keep your proof of purchase. If any damage is found, contact customer support.

Serial Number _____ Purchased From _____

Product Number _____ Purchase Date _____

Document Number: TME92883021EN Date: February 2026

Revision: V1.6

Information on Non-Inclusive or Insensitive Terminology

As a responsible, inclusive company, Schneider Electric is constantly updating its communications and products that contain non-inclusive or insensitive terminology. However, despite these efforts, our content may still contain terms that are deemed inappropriate by some customers.

Validity Note

This document is valid only for the Schneider EcoStruxure Energy Asset Controller (EcoStruxure Energy Asset Controller) EPCEACEU1.
If this manual is in any language other than English, although steps have been taken to maintain the accuracy of the translation, the accuracy cannot be guaranteed. Approved content is contained with the English language version which is posted at https://www.se.com/.
The characteristics of the products described in this document are intended to match the characteristics that are available on https://www.se.com/. As a part of our corporate strategy for constant improvement, we may revise the content over time to enhance clarity and accuracy. If you see a difference between the characteristics in this document and the characteristics on https://www.se.com/, consider https://www.se.com/ to contain the latest information.

Safety Information

Important Information

Read these instructions carefully and look at the equipment to become familiar with the device before trying to install, operate, service or maintain it. The following special messages may appear throughout this documentation or on the equipment to warn of potential hazards or to call attention to information that clarifies or simplifies a procedure.

The addition of either symbol to a “Danger” or “Warning” safety label indicates that an electrical hazard exists which will result in personal injury if the instructions are not followed.

This is the safety alert symbol. It is used to alert you to potential personal injury hazards. Obey all safety messages that follow this symbol to avoid possible injury or death.

⚠ DANGER

DANGER indicates a hazardous situation which, if not avoided, will result in death or serious injury.
Failure to follow these instructions will result in death or serious injury.

⚠ WARNING

WARNING indicates a hazardous situation which, if not avoided, could result in death or serious injury.
Failure to follow these instructions can result in death, serious injury, or equipment damage.

⚠ CAUTION

CAUTION indicates a hazardous situation which, if not avoided, could result in minor or moderate injury.
Failure to follow these instructions can result in injury or equipment damage.

NOTICE

NOTICE is used to address practices not related to physical injury. The safety alert symbol shall not be used with this signal word.
Failure to follow these instructions can result in equipment damage.

Audience

This manual is intended for use by qualifed personnel installing and operating a system involving EcoStruxure Energy Asset Controller.
The qualifed personnel have training, knowledge, and experience in:

- Installing electrical equipment.
- Applying all applicable installation codes.
- Analyzing and reducing the hazards involved in performing electrical work.
- Installing and configuring EcoStruxure Energy Asset Controller.
- Selecting and using Personal Protective Equipment (PPE).

Qualified personnel have also received specific training from the manufacturer on installing and operating the controller.

About Scope

This document introduces EcoStruxure Energy Asset Controller (hereinafter referred to as "product", "controller" or "equipment") including product introduction, installation, commissioning, system maintenance, technical specifications and EcoStruxure Energy Asset Controller accessory kit.

Abbreviations and Acronyms

Abbreviations and Acronyms	
DC	Direct current, see also VDC
CAN	Controller Area Network
485	RS-485 (Recommended Standard 485), a serial communications standard
LAN	Local Area Network
WAN	Wide Area Network
LED	Light Emitting Diode
GND	Ground
PE	Protective earth (PE)
OTA	Over-The-Air
EMS	Energy Management System
EUC	Energy Unit Controller

Safety Information

READ AND SAVE THESE INSTRUCTIONS - DO NOT DISCARD

Before installing, uninstalling, or operating EcoStruxure Energy Asset Controller, read all instructions and cautionary markings on the unit, and in this document.Refer to your warranty for instructions on obtaining service.
IMPORTANT: Refer to your warranty for instructions on obtaining service.

⚠ CAUTION

HAZARD OF DEGRADATION OF EQUIPMENT PERFORMANCE

- You must be a licensed electrician and complete a training course to become an EcoStruxure Energy Asset Controller certified installer.
- To complete the training and become a certified installer, or any further support refer to se.com or contact your local Schneider Electric Customer Cacenter.
- Do not modify any mechanical or electrical parts..

Failure to follow these instructions can result in injury or equipment damage.

NOTICE

RISK OF DAMAGE

- EcoStruxure Energy Asset Controller should be installed, operated, serviiced and maintained only by qualified personnel.
- Schneider Electric will not accept any liability for consequences arising from the use of this material.
- A qualified person is a person who has the skills and know-how relatting to the construction, installation and operation of electrical equipment and who has

Failure to follow these instructions can result in equipment damage.

Important Information

To help you make effective use of EcoStruxure Energy Asset Controller, we have prepared this manual with the utmost care.It provides all the information you need to prepare for the installation and to install your equipment.We urge you to read it attentively and follow its instructions.

- The product needs to be installed according to the specifications and requuirements as defined by Schneider Electric.No responsibility is assumed by Schneider Electric if these requirements are not respected.
- Non-approved installation methods are performed at the risk of thhe contractor and void the (limited) warranty.
- Under no circumstances will compliance with the information in this rmanual relieve the user of his/her responsibility to comply with all applicablecodes or standards.
- This document describes the most used installation and mounting scenarios.If situations arise in which it is not possible to perform an installation following the procedures provided in this document, contact Schneider Electric.
- Schneider Electric is not responsible for any damages that may result from custom installations that are not described in this document or for any deviation from the installation recommendations.

1 Overview

1.1 EcoStruxure Energy Asset Controller external view

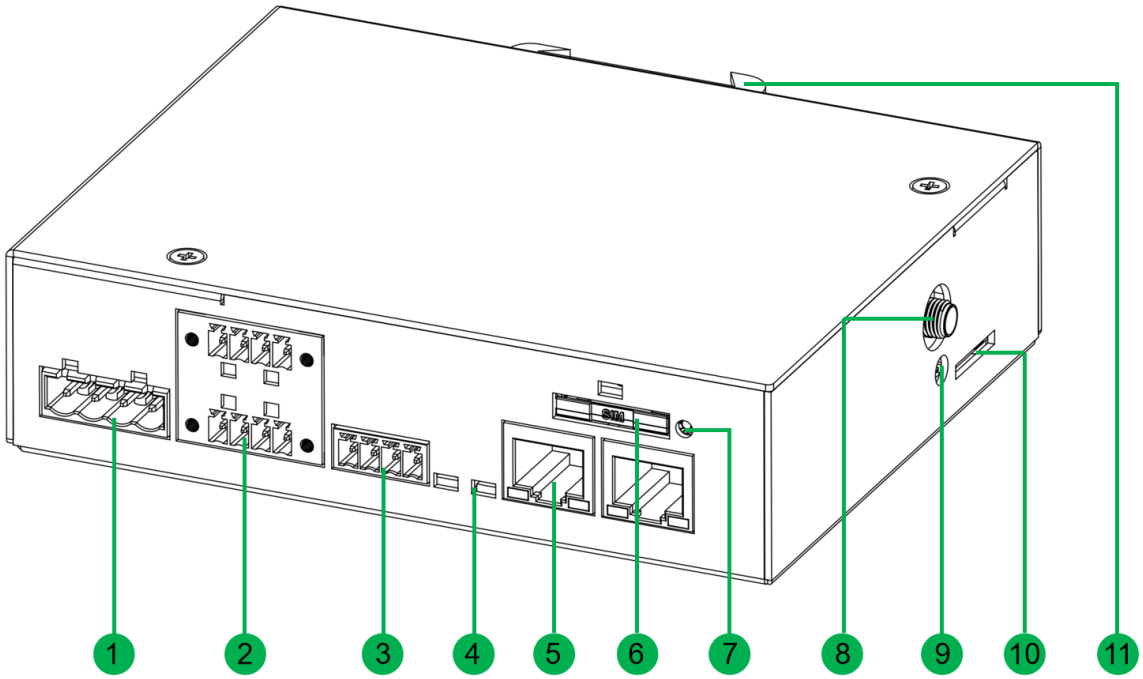

1	Power port
2	485 port x4
3	CAN port x2
4	LED indicator x2
5	Network Port x2
6	SIM Card slot

7	4G LED indicator
8	4G antenna port
9	Reset button
10	TF card slot
11	Rail retaining clip

1.2 Dimensions of the EcoStruxure Energy Asset Controller

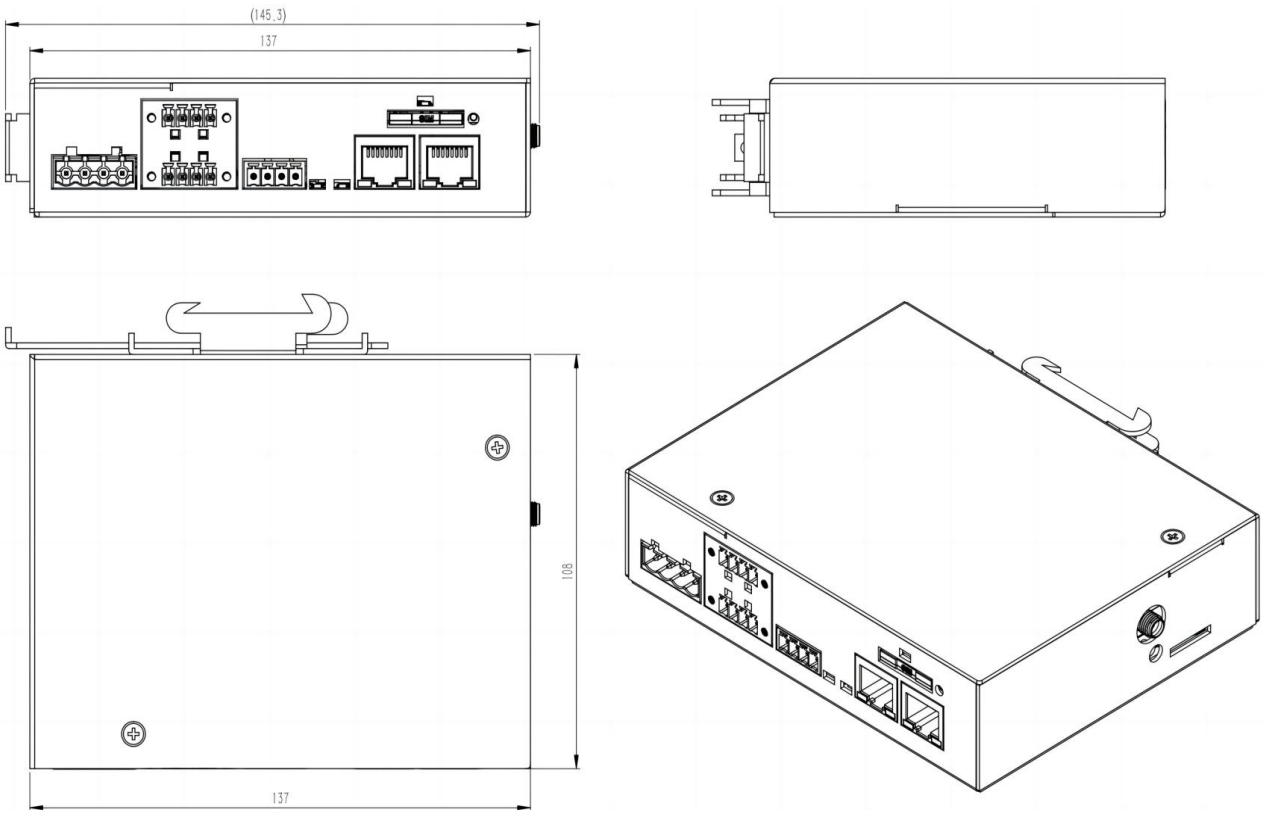

1.3 Main functions of EcoStruxure Energy Asset Controller

NOTICE

RISK OF EQUIPMENT DAMAGE OR INCORRECT INSTALLATION

- Ensure that only compatible part numbers are selected when designing your system.
- Obtain all necessary permits prior to starting the installation, and ensure installations meet all local codes and standards.
- Before installing the Controller, inspect it for any signs of shipping damage. If damage is found, contact Technical Support immediately.

Failure to follow these instructions can result in system malfunction.

- Intelligent control of power in multiple operating modes such as Photovoltaic, storage and EV charging.
- Control optimization of energy usage.
- Intelligent switching and protection of energy storage systems.
- PV inverter management with possible production curtailment
- To be split into 2 items:
  - Power subscribed optmization
  - Installation monitoring
- Equipment event recording, remote program update, and remote operation and maintenance.
- Local charging station group power management and adaptive optimal control.
- Grid orderly charging scheduling terminal to execute orderly charging instructions.

1.4 System Connection Diagram

1. EMS Mode

Under the EMS mode,EcoStruxure Energy Asset Controller acts as the control hub of the system, managing Schneider Boost Pro(CR: BAT215KPCS100K3EU1/ BAT215KPCS100K3EU2), DC Fast Charging Station, and PV Inverter based on predetermined control strategies.

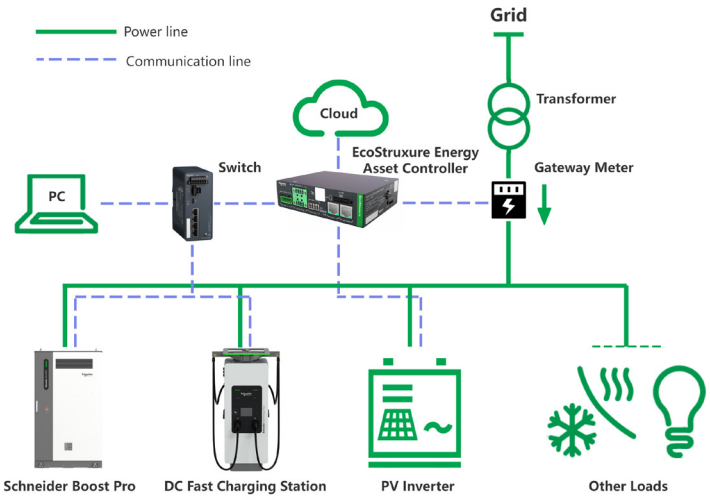

2. EUC Mode

Under the EUC mode, EcoStruxure Energy Asset Controller is a sub-device of the 3rd-party EMS controller. As a unit controller, EcoStruxure Energy Asset Controller can only be connected to Schneider Boost Pro(CR: BAT215KPCS100K3EU1/BAT215KPCS100K3EU2).

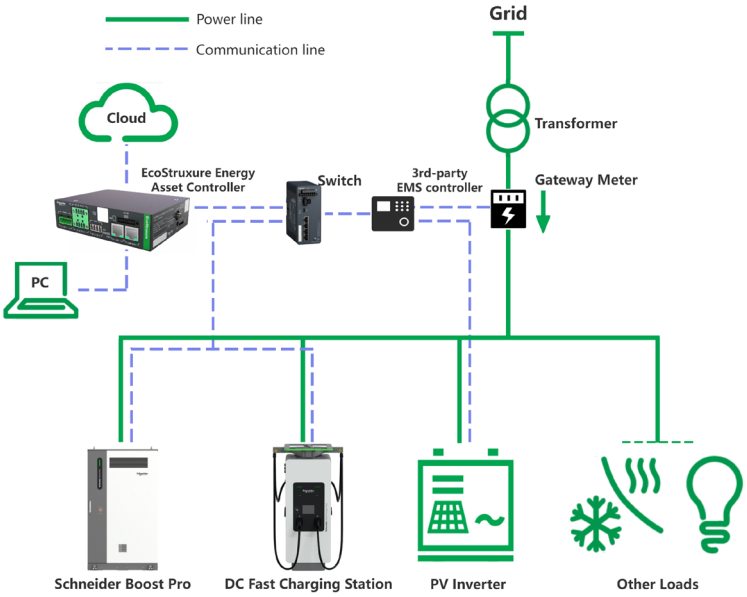

2 Pre-installation Inspection

2.1 Required Tools and Materials

NOTICE

EQUIPMENT DAMAGE OR INCORRECT INSTALLATION RISK

- Before unpacking the Controller, inspect the outer packaging for visible damage (e.g., holes, cracks, or signs of internal damage).
- Verify that the Controller model on the label matches the order specifications.
- If packaging is abnormal or the model does not match, do not open; contact your dealer immediately.
- After unpacking, confirm all contents are complete and free from external damage.
- If items are missing or damage is found, contact your dealer.
- Select tools according to the actual conditions on-site.
- Select required cables and accessories according to the actual conditions on-site.
- Consider the environmental conditions listed in the table below when choosing the installation site for the EcoStruxure Energy Asset Controller.

Failure to follow these instructions can result in equipment damage, voided warranty, or system malfunction.

1. Recommended tools

Before you go to the site, please prepare the following tools/equipment:

- Churn drill--Keystone 55B
- Diagonal pliers-Klein Tools D228-8
- Decrustation pliers-Bahco 8070
- Wire stripper-Klein Tools 11063
- Crystal head wire clamp-Klein Tools VDV226-110
- Straight screwdriver-Wera 05073501001
- Cross-head torque screwdriver-Snap-on QD2R100B
- One-handed torque screwdriver-Snap-on QD2R100B
- Tool knife-Stanley 10-499
- Heat guns-Bosch GHG 660 LCD
- Wire nipper-Knipex 70 01 200
- Vacuum cleaner-Kärcher WD6
- Marker pen-Faber-Castell
- Metallic tape-3M™ 425 Aluminum Foil Tape
- String the belt
- Multimeter-Fluke 101
- Heat-shrinkable tubing-3M™ FIT-221
- Levelling instrument-Leica NA720
- Rubber hammer-Picard 6400
- Insulating mittens-Class 00 (500V AC)
- Insulant shoe-Honeywell RigDog 22950

NOTE: The above tools need to be selected according to the actual situation on-site.

2. Required cables and accessories

For cable specifications, refer to Wiring on page 15.

- Protective Earth (PE) cables
- DC power cables
- Communication cables
- Cable ties
- Heat shrink tubing

3. Required location

The environmental conditions listed in the table below need to be taken into consideration when selecting the installation site of EcoStruxure Energy Asset Controller.

Environmental parameter	Permissible Conditions
EMC environment	Industrial environment – Class A
Ambient temperature	-30°C ~ 65°C
Humidity	10% ~ 95%
Altitude	Up to 2000 m
Ambience	Suitable for indoor installation or installation inside an outdoor distribution box. Additionally, the distribution box must meet IP54 or higher .

2.2 Maintenance Distance

NOTICE

RISK OF FAILED OR IMPROPER EQUIPMENT INSTALLATION

- Always follow the instructions described below when the Controller needs to be installed near walls or other obstacles, a certain maintenance distance needs to be allocated.
- Ensure that enough space is available around the Controller. It is recommended to allow for 50 mm clear space above or below the Controller and 100 mm clear space in the front.

Failure to follow these instructions can result in equipment damage.

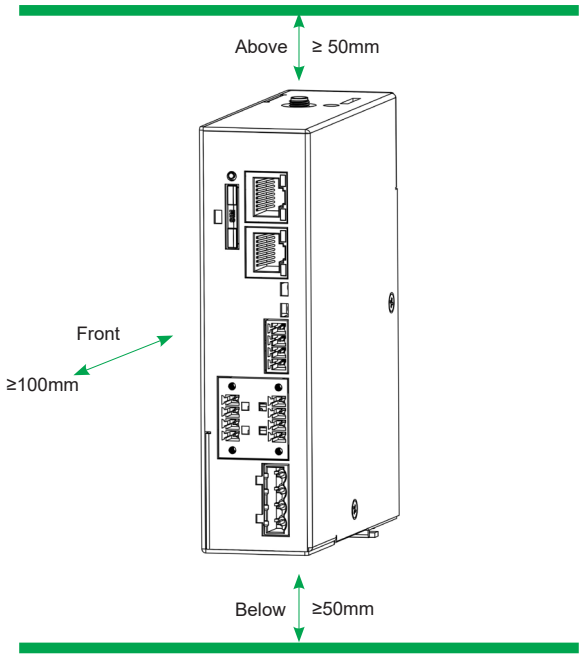

3 Installation

3.1 Mount the Controller

It is fixed by the rail clip on the back of the Controller (as shown in the figure below).

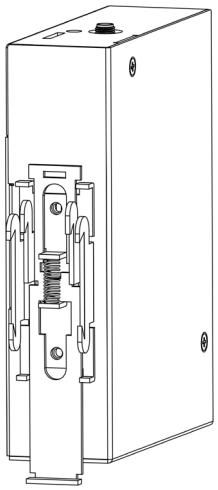

- Install the guide rail in the appropriate position and fix it. It is recommended to use a 35mm wide standard guide rail with a length of at least 100mm.
- Pull down the controller rear rail clip directly and lock it onto the rail.

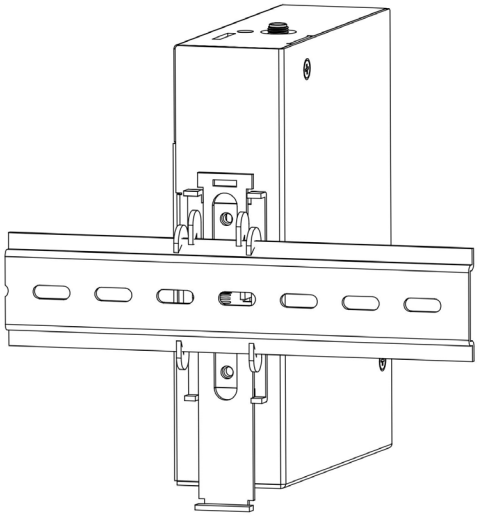

- Check to confirm that the Controller is securely installed.

4 Connecting

NOTICE

RISK OF SIGNAL INTERFERENCE
Communication cables and power cables must be laid separately, with a distance of at least 30mm maintained between them. Avoid cable cross-over.
Failure to follow these instructions can result in loss of communication.

Here is the table of Controller cable specification:

Cable	Type	Specification	Cable Source
Earthing cable	Multi-strand copper cable	Cable cross-sectional area: 1.5 mm²	Not included in package
DC input cable	2-core stranded copper control cable	Cable cross-sectional area: 0.75 mm²	Not included in package
RS485 Communication Cable	Outdoor 2-core stranded shielded twisted pair cable	Twisted pair shielding ≥33 twists/m, individual conductor size ≥0.5 mm², permissible laying length ≤200 m.	Not included in package
CAN Communication Cable	Outdoor 2-core stranded shielded twisted pair cable	Twisted pair shielding ≥33 twists/m, individual conductor size ≥0.5 mm², permissible laying length ≤200 m.	Not included in package
Network Cable	CAT5e shielded wire	Cat 5e Or higher specification network cable and shielded crystal head. The laying distance is ≤60 m.	Not included in package

4.1 Interface definition

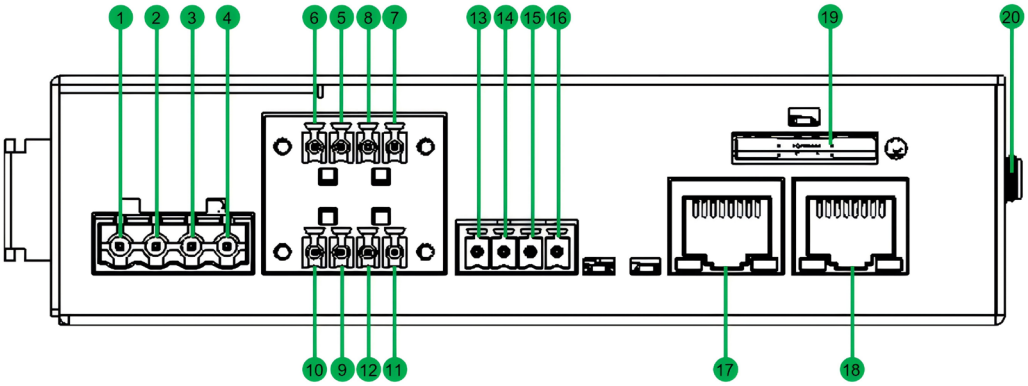

Pin	Definition	Function	Example
1	PE	Ground connection	Connect the protective earth wire
2	/	/	/
3	V-	Negative power supply	DC Power
4	V+	Active power supply	DC Power
5	RS485_2_A	RS485 Second differential signal +	RS485 signal interface for communication with other.
6	RS485_2_B	RS485 Second differential signal -	RS485 signal interface for communication with other.
7	RS485_1_A	RS485 differential signal +	RS485 signal interface for communication with other.
8	RS485_1_B	RS485 differential signal -	RS485 signal interface for communication with other.
9	RS485_4_A	RS485 fourth differential signal +	RS485 signal interface for communication with other.
10	RS485_4_B	RS485 fourth differential signal -	RS485 signal interface for communication with other.
11	RS485_3_A	RS485 Third differential signal +	RS485 signal interface for communication with other.
12	RS485_3_B	RS485 Third differential signal -	RS485 signal interface for communication with other.
13	CAN_2_H	CAN second communication high-bit data line	CAN signal interface for communication with other.
14	CAN_2_L	CAN second communication low-bit data line	CAN signal interface for communication with other.
15	CAN_1_H	CAN communication high-bit data line	CAN signal interface for communication with other.
16	CAN_1_L	CAN communication low-bit data line	CAN signal interface for communication with other.
17	LAN	Ethernet port	It can be connected to the other through switches, routers and other devices
18	LAN/WAN	Ethernet port	Debug
19	SIM Card	SIM Card slot	Support Micro-SIM Card
20	4G	4G antenna	/

4.2 Install the Protective Earth (PE) cable

NOTICE

RISK OF PRODUCT DAMAGE

- Ensure the power cables are connected correctly, without incorrect or reversed connections.
- Verify grounding continuity (resistance ≤1mΩ) using a multimeter.
- Inspect PE wire for damage during maintenance; replace if frayed/corroded.

Failure to follow these instructions can result in product malfunction.

- Prepare a wire with a recommended power wire size of 1.5mm² for the earthing wire.
- Locate the power input interface area on the side of the controller, which is marked with "G" labels. Insert the wire into the terminal hole labeled with "G".

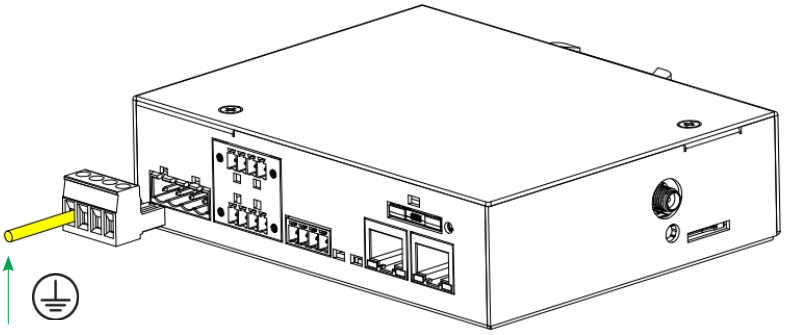

4.3 Install the power wiring

1. Connect to the switching power supply

Before installation, it is recommended to purchase the EcoStruxure Energy Asset Controller accessory kit (CR: EPCEACACCEU1) from Schneider Electric's official channels. Take the power adapter from the accessory kit .
Before wiring, you need to prepare two-core DC cables and three-core AC cables. The specifcations of the power cables are shown in the following table.

Cable	Recommended cross-sectional area	Protective layer stripping length	Insulation layer stripping length
DC cable	2*0.75mm²	80mm	11mm
AC cable	3*1.5mm²	80mm	11mm

- Connect EcoStruxure Energy Asset Controller power cable: Insert the connector at one end of the EcoStruxure Energy Asset Controller power cable into EcoStruxure Energy Asset Controller power interface, and then connect the other end to the DC output side of the switching power supply.
  Note: The numbered wires should be distinguished, and the grounding wire connected to the PE busbar of the cabinet where EcoStruxure Energy Asset Controller is installed.
- Connect the AC power cable: Connect the AC input of the switching power supply to the European standard plug (the brown wire is the L wire, the blue wire is the N wire and the yellow/green wire is the PE of the supply.)

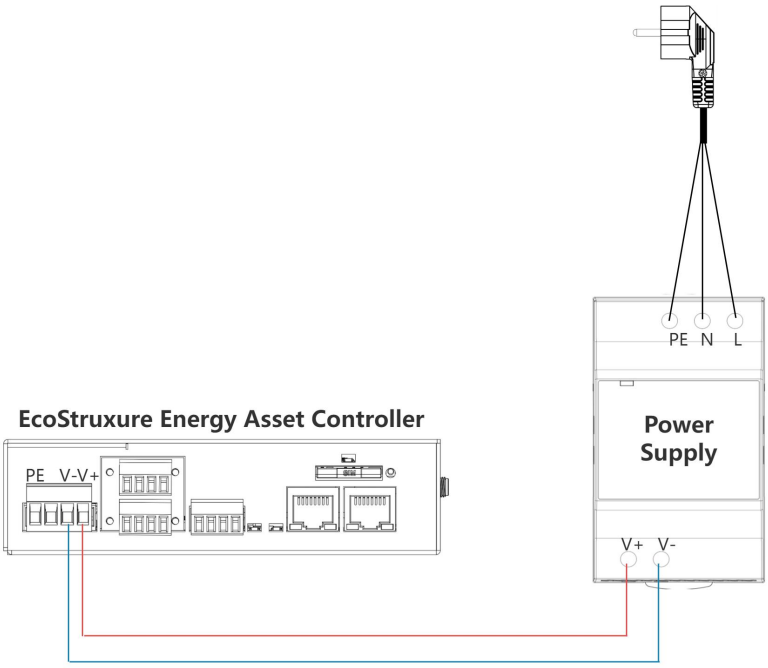

4.4 Install the 485 communication wiring

NOTICE

RISK OF SIGNAL INTERFERENCE

- Ensure RS485+ is connected to the Controller's A terminal.
- Ensure RS485- is connected to the Controller's B terminal.

Failure to follow these instructions can result in communication failure or system operation errors.

- Prepare a twisted pair cable with a single wire cross-sectional area greater than 0.5mm². The wires correspond to terminals A and B respectively.
- Locate the RS485 interface on the side of the Controller, which is marked with labeled ports "A" and "B".
- Insert the wires into the terminal block holes.
- Ensure the wires are securely inserted without loosening, then insert the terminal block into the Controller's RS485 port to complete the signal wire connectionPrepare a wire with a recommended power wire size of 1.5mm² for the earthing wire.

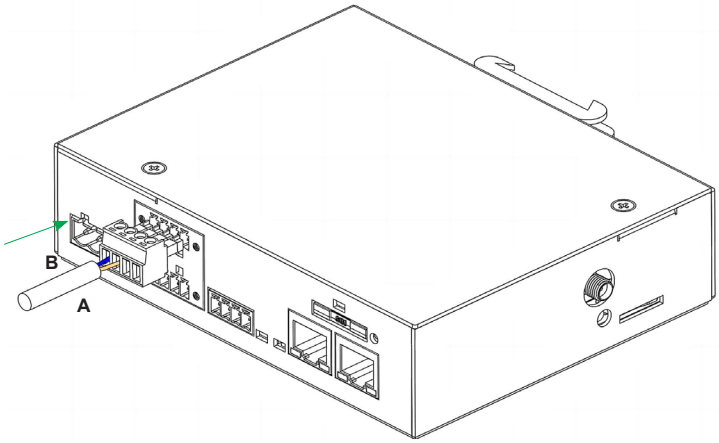

4.5 Install the CAN communication wiring

NOTICE

RISK OF SIGNAL INTERFERENCE

- Ensure CAN+ is connected to the Controller's H terminal.
- Ensure CAN- is connected to the Controller's L terminal.

Failure to follow these instructions can result in communication failure or system operation errors.

- Prepare a twisted pair cable with a single wire cross-sectional area greater than 0.5mm². The wires correspond to terminals H and L respectively.
- Locate the CAN interface on the side of the Controller, which is marked with labeled ports "H" and "L".
- Insert the wires into the terminal block holes.
- Ensure the wires are securely inserted without loosening, then insert the terminal block into the Controller's CAN port to complete the signal wire connection.

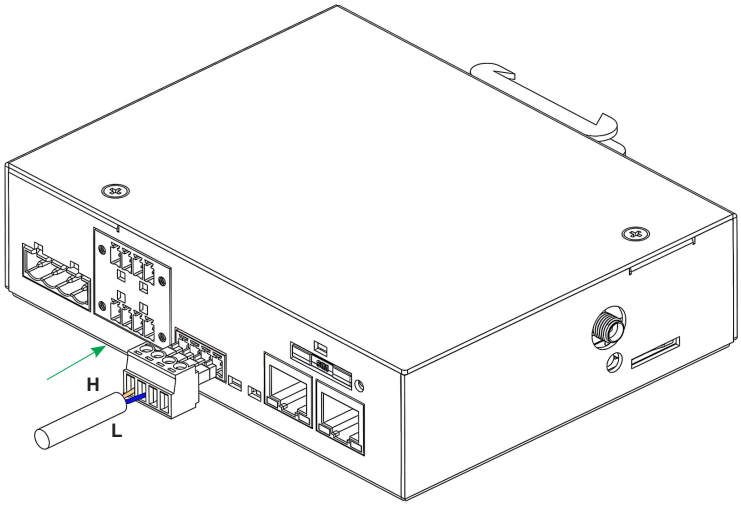

4.6 Install the Ethernet wiring

NOTICE

RISK OF SIGNAL INTERFERENCE

- Ensure the network cable is plugged in properly..
- Ensure the network cable has a shielding layer.
- Pay attention to the distinction between port types: LAN/WAN interface is for connecting to the public network, while LAN interface is for connecting to the internal network

Failure to follow these instructions can result in communication failure or system operation errors.

Connect the Ethernet cable and use CAT 5E shielded network cable.

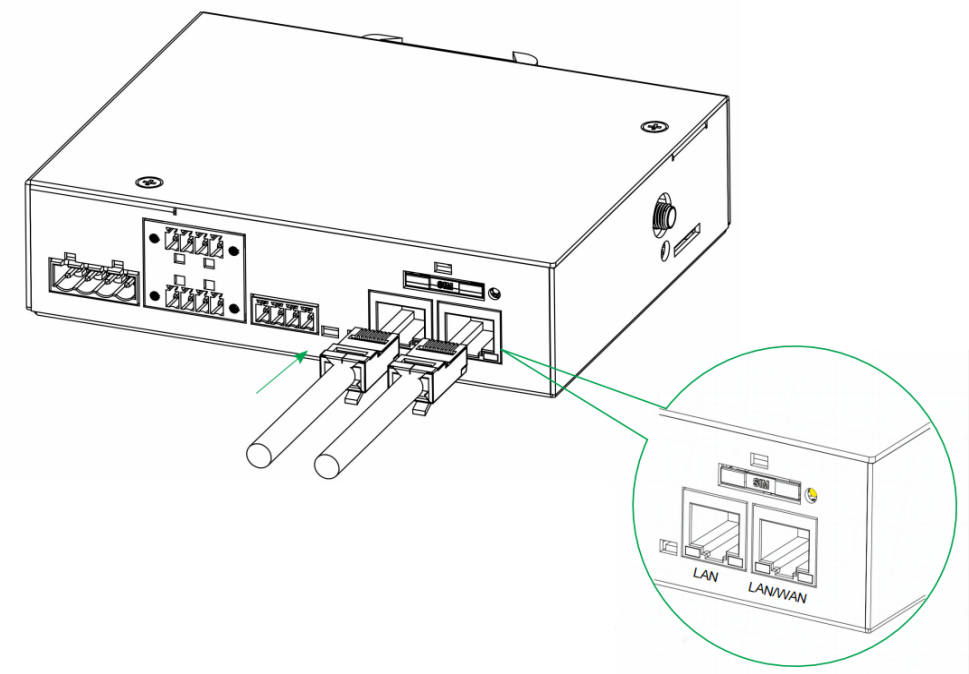

4.7 Install the SIM card and 4G antenna

1. Insert the SIM card

SIM card size: 12mm*15mm

- Use the eject pin to press the yellow button on the SIM card tray slot, and the SIM card tray will pop out automatically.

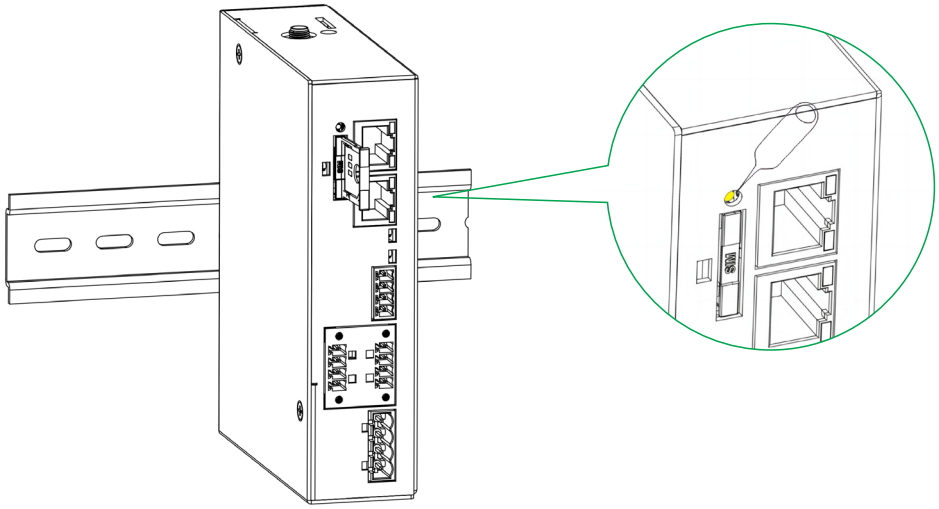

- Insert the SIM card into the SIM card slot.

Note: When installing the SIM card, you can determine the installation direction of the SIM card based on the silk screen.

- Press the SIM card tray inward with your hand.

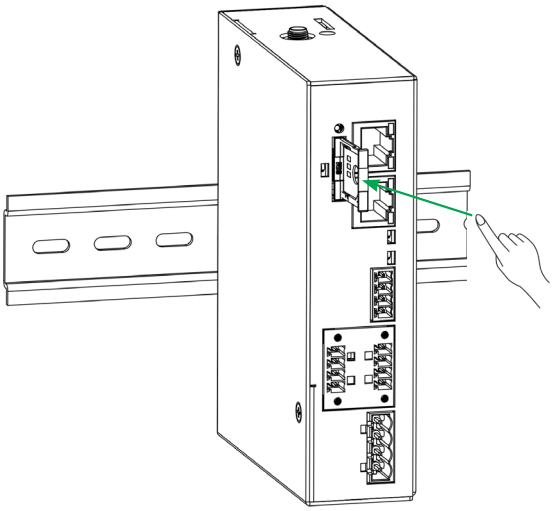

2. Install the antenna

NOTICE

RISK OF SIGNAL INTERFERENCE

- Avoid installing the antenna in a location where it may be subject to strong physical shock or vibration.
- Ensure that the installation location is far away from high temperature heat sources (such as engines, radiators, heating elements) to avoid exceeding the operating temperature range of the antenna.
- Avoid installing in a humid, dusty environment or an environment with corrosive gas or liquid splashing.
- Avoid excessive bending, squeezing or stretching of the antenna cable. The bending radius should be 5-10 times the cable diameter.
- Try to stay away from known strong interference sources, such as high-power radio transmitters, radars, frequency converters, high-voltage power lines, arc equipment, etc.
- Avoid placing antennas of different systems (especially those with similar operating frequency bands) in parallel or too close to each other to prevent mutual interference (insufficient isolation).
- Ensure that the antenna is installed in a location where it is not likely to be accidentally touched by personnel (especially near rotating equipment) to prevent injury or damage to the antenna.
- Comply with all relevant electrical safety codes.

Failure to follow these instructions can result in communication failure or system operation errors.

Screw the end with the nut of the prepared antenna clockwise onto the corresponding antenna port of the EcoStruxure Energy Asset Controller.

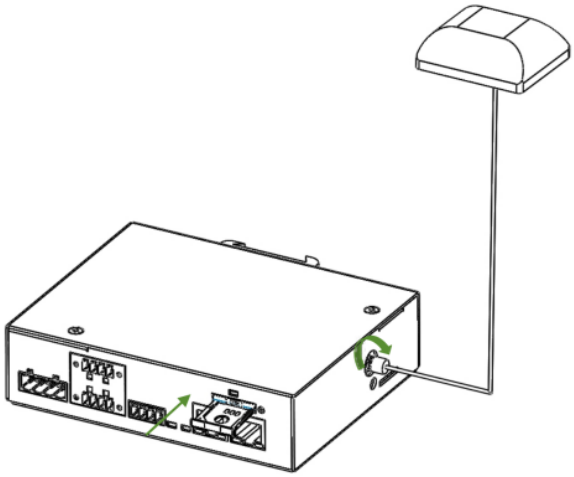

Note:

- For effective horizontal coverage, the antenna needs to be installed vertically (perpendicular to the ground). Avoid horizontal placement.
- Place the antenna as high as possible and away from metal objects (such as device enclosures, cabinets, large metal structures, pipes, cable trays), concrete walls or other obstacles that may block or reflect the signal.
- Verify that the antenna is far away from the components inside the device that may cause interference (such as high-power power supplies, motor drivers, and high-frequency circuits).
- Leave enough space around the antenna (it is recommended to be at least 1/4 of its length), and avoid being tightly surrounded by other objects.
- If installed in the cabinet, the antenna needs to be extended outside the cabinet or installed on the top/side of the cabinet (make sure the signal is good at this position) to avoid shielding the signal by the metal cabinet.
- Verify that the antenna has a clear view of the sky and is not blocked by buildings, roofs, trees or other large objects.

5 Commissioning Checklist

5.1 Physical inspections

⚠ WARNING

HAZARD OF ELECTRIC SHOCK OR FIRE

- Before powering on equipment, verify that all wiring is in good condition and wire size should be in accordance with local regulation. Do not operate the controller with damaged or substandard wiring.
- Do not operate the controller if it has been damaged in any way. Do not disassemble the controller except where noted for connecting wiring and cabling.
- Use only the accessories that are recommended by the manufacturer.

Failure to follow these instructions can result in serious injury or equipment damage.

- EcoStruxure Energy Asset Controller has been securely installed in place.
- All cables are properly connected
- Power and signal cable routing meets the requirements for low-voltage separation and complies with system wiring specifications.
- Cables are neatly bundled with uniform spacing between cable ties, proper tightness and consistent orientation.
- No excess tape, cable ties, or other debris remain on the cables. Press the SIM card tray inward with your hand.

5.2 Commission the system

Debug the controller, please refer to <EcoStruxure Energy Asset Controller Webpage Commissioning Guide>.

6 Operation

6.1 System main functions

- Manage and control charging station groups (special transformer/non-special transformer).
- Charge and discharge control and protection of the energy storage system.
- Enabling/disabling, power control and reverse power protection of the photovoltaic system.
- Load of distribution network, as well as data acquisition and monitoring.
- Side response of power demand.
- Energy storage virtual capacity enhancement.
- Integrated energy dispatch of optical storage, charging and discharging.
- Microgrid on-grid/ off-grid operation.
- Visual management and analysis of energy used.
- Remote intelligent operations and maintenance.
- Supporting multi-user login of local webpage and remote configuration of system parameters.
- Remote OTA, intelligent upgrade for end user equipment.

6.2 LED Indicators

After the system is powered on, the LED Indicators display according to the Controller's status.

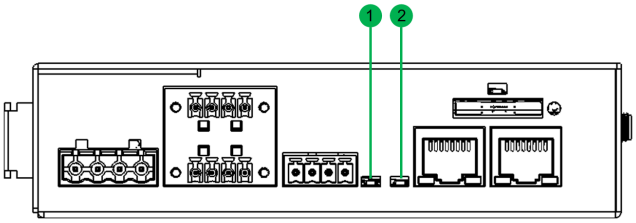

1	SYS
2	COM

No.	Lighting type		Error	Meaning	Remark
	SYS	COM			
1	Red	Red	Level 1 (High)	4G communication fault or TF card authentication fault	Failure of EcoStruxure Energy Asset Controller operation
2	Red	Green	Level 2 (Medium)	485/CAN/LAN fault	Failure of managing charging station power
3	Green	Red	Level 3 (Low)	RTC fault or other fault	No effects on operation
4	Green	Green	Normal	Normal	N/A

7 Startup/Shutdown

7.1 Startup

To turn the controller on:
When the DC power supply is used, check that the cable from the DC power supply to the controller is correctly connected, and then close the front stage power supply switch of the DC power supply.

7.2 Shutdown

When the DC power supply is used:
- Turn off the upstream power switch (e.g., distribution box, AC input switch) to completely cut off the input power to the DC power supply.
- Unplug the power connector terminal of the Controller. This verifies the circuit is fully de-energized.

8 Troubleshooting

NOTICE

RISK OF EQUIPMENT DAMAGE
Only individuals with valid certifications or documented training in EcoStruxure Energy Asset Controller maintenance may perform troubleshooting.
Failure to follow these instructions can result in equipment damage.

- Verify that there is no strong electromagnetic interface equipment around the Controller.
- Verify that there is no heat source around the Controller.
- Wipe dirt regularly.
- Check regularly for signs of cable connections loosening.

Issue	Analysis	Solution
No power	The power port of the Controller is not connected to power supply.	Correctly connect the power supply to the Controller's power port.
	Power supply issue	Replace the power supply.
	Controller issue	Please contact Schneider.
Cannot find device	Communication port is not connected to device, or connected incorrectly (auto, skip, reverse).	Check communication cable connection, reconnect it if incorrect, disconnected, or reversed.
	Incorrect communication parameter settings	Check communication parameter settings to verify terminal and communication address are correctly set.
	Devices that don't support auto-identification (like environment monitors, meters) weren't added manually.	Manually add these devices.
	Manually added device address doesn't match actual device address.	Check the device address settings.
	Device is not functioning properly.	Check device operation status.
Cannot communicate with Backend	Network connection between controller and backend is down.	Check if the Controller's Ethernet port is properly connected.
	Incorrect network parameter settings.	Check if network parameters are correctly set.

9 Maintenance

⚠ WARNING

HAZARD OF ELECTRIC SHOCK

- This equipment must only be installed, configured, and serviced by qualified electrical personnel.
- Qualified electrical personnel must apply appropriate personal protective equipment (PPE), follow safe electrical work practices, and adhere to all applicable local and national electrical codes.
- Do not disassemble, alter the product, or modify the software code without authorization
- Disconnect all external connections to the Controller.
- Ensure the Controller cannot be accidentally re-energized during maintenance.
- Establish necessary grounding connections.

Failure to follow these instructions can result in serious injury or equipment damage.

- Due to the influence of environmental factors such as temperature, humidity, dust, and vibration, internal components of the Controller may experience aging and wear, which can lead to potential failures within the device. Therefore, it is recommended to implement routine and regular maintenance for the Controller to verify its proper operation and extend its service life.
- All measures and methods that contribute to maintaining the controllers in optimal working condition fall under the scope of maintenance work.

9.1 Turn off the Controller

Before performing maintenance, turn off the Controller.

9.2 Routine maintenance

NOTICE

RISK OF EQUIPMENT DAMAGE

- Use only a soft cloth dampened with water and mild soap to clean the controller.
- Do not use solvents or chemicals that are corrosive or flammable.

Failure to follow these instructions can result in equipment damage.

The recommended routine maintenance is as follows:

Inspection item	Inspection method
Working environment	Verify there are no strong electromagnetic interference devices near the Controller.
	Verify there are no heat sources near the Controller.
	Verify there are no corrosive substances near the Controller.
Hardware maintenance	Check that the power supply voltage is normal.
	Check that the wiring ground is flat.
	Check that the ground wire is properly grounded.
System cleaning	Check the cleanliness of the chassis, electrical boards and components.
	Check the terminal connections for dust and contamination.
Terminal and cable connections	Check for not fully tightenedscrews on control terminals and tighten them with a screwdriver.
	Check for discoloration on terminal blocks or screws.
	Visually inspect the connections of device terminals and cable distribution.
Software maintenance	Log in to the web interface to check device communication status.
	Log in to the web interface to review the Controller parameter settings.
	Log in to the web interface to check the Controller software version.

10 Disassembling and Decommissioning

At the end of the controller's life, follow the instructions in this section to dispose of and recycle the controller.

⚠⚠ WARNING

HAZARD OF ELECTRIC SHOCK, EXPLOSION, ARC FLASH OR FIRE
Do not dispose of the controller in a fire. Always follow local guidelines for recycling and disposal.
Failure to follow these instructions will result in serious injury.

11 Recycle

Product Disposal

Electric appliances marked with the symbol shown need to be professionally treated to recover, reuse, and recycle materials in order to reduce negative environmental impact. When the product is no longer usable, the consumer is legally obligated to ensure that it is collected separately under the local electronics recycling and treatment scheme.

12 Specifications

FW Version	
EcoStruxure Energy Asset Controller	3.6.1
OTA FW upgrade	Supported
EcoStruxure Energy Asset Controller Product	
Dimensions (H x W x D)	137mm * 108mm * 36mm
Weight	654g
Installation method	Din-Rail
Max power dissipation	15W
Rated Power Consumption	5W
Rated voltage	24V
4G Communication	LTE-CAT4
Ethernet Interface	LAN & WAN
RS485 Interface	4 channels,isolated
CAN Interface	2 channels,isolated
Micro SD	Supported,1 Channel Capacity ≤32 GB
Operating System	Linux
Communication Protocol	Modbus RTU, Secured Modbus TCP, ProtoBuf, MQTT
Protection Grade	IP20
Operating Temperature	-35℃ ~ +65℃
EMC Level	Class A
Certifications	
Standard Compliant	EN62368-1 EN62311 EN55032, EN 55035 EN 61000-6-2, EN 61000-6-4 EN 301 489-1 V1.9.2, EN 301 489-1 V2.2.3, EN 301 489-52 V1.2.1, EN 301 489-52 V1.3.1 EN 301 511 V12.5.1, EN 301 908-1 V15.2.1, EN 301 908-2 V13.1.1, EN 301 908-13 V13.2.1 EN 18031-1:2024 RoHs, REACh

13 List of the attachment package

Name	Manufacturer	Model	Parameter description
Switching power supply	MEAN WELL	HDR-60-24	Input: AC 85~264V Output: DC 24V,2.5A Rated power: 60W
Power plug	Hong Chang	DTIII-2P-05	Rated voltage: 250V Rated current: 16A Cable spec.: H05VV-F 3*1.5mm2 Cable length: 1.5m Tail stripping length: 200mm
EcoStruxure Energy Asset Controller power cable	/	/	Cable spec.: UL-AWM1015 3*18AWG Cable length: 1.5m
4G antenna	Check that the wiring ground is flat.	3.N300.1093	Dome antenna: Frequency band: 1710-2690MHZ Cable length: 2.5m
Spare accessories	KST	E1008-LRV1-6	Cold rolled terminals: E1008-L*4, RV1-6*2