Galaxy VS

UPS for External Batteries

Installation

120-150 kW 400 V

08/2019

www.schneider-electric.com

Legal Information

The Schneider Electric brand and any trademarks of Schneider Electric SE and its subsidiaries referred to in this guide are the property of Schneider Electric SE or its subsidiaries. All other brands may be trademarks of their respective owners.

This guide and its content are protected under applicable copyright laws and furnished for informational use only. No part of this guide may be reproduced or transmitted in any form or by any means (electronic, mechanical, photocopying, recording, or otherwise), for any purpose, without the prior written permission of Schneider Electric.

Schneider Electric does not grant any right or license for commercial use of the guide or its content, except for a non-exclusive and personal license to consult it on an "as is" basis. Schneider Electric products and equipment should be installed, operated, serviced, and maintained only by qualified personnel.

As standards, specifications, and designs change from time to time, information contained in this guide may be subject to change without notice.

To the extent permitted by applicable law, no responsibility or liability is assumed by Schneider Electric and its subsidiaries for any errors or omissions in the informational content of this material or consequences arising out of or resulting from the use of the information contained herein.

Go to
https://www.productinfo.schneider-electric.com/portals/ui/galaxyvs_iec/
or scan the QR code above for digital experience and translated manuals.

Table of Contents

Important Safety Instructions — SAVE THESE INSTRUCTIONS 5
- Electromagnetic Compatibility 6
- Safety Precautions 6
- Electrical Safety 9
- Battery Safety 9

Specifications 11
- Input Specifications 400 V 11
- Bypass Specifications 400 V 11
- Output Specifications 400 V 12
- Battery Specifications 400 V 13
- Recommended Cable Sizes 400 V 14
- Recommended Upstream Protection 400 V 15
- Torque Specifications 15
- Requirements for a Third Party Battery Solution 16
  - Third Party Battery Breaker Requirements 16
  - Guidance for Organizing Battery Cables 17
- Environment 17
- UPS Weights and Dimensions 18
- Clearance 18

Single System Overview 19

Parallel System Overview 20

Overview of Installation Kits 23
- Optional Seismic Kit GVSOPT002 24
- Optional Parallel Kit GVSOPT006 24

Installation Procedure for Single Systems 25

Installation Procedure for Parallel Systems 26

Prepare for Installation 27

Install the Power Module(s) 31

Install the Seismic Anchoring (Option) 32

Prepare the UPS for Earthing System 33

Connect the Power Cables 34

Connect the Signal Cables 38

Connect the Signal Cables from Switchgear and Third-Party Auxiliary Products 40

Connect the IMB Signal Cables in a Simplified 1+1 Parallel System 43

Connect the PBUS Cables 47

Connect the External Communication Cables 48
- Connect the Modbus Cables 49

Add Translated Safety Labels to Your Product 51

Final Installation 52

Important Safety Instructions — SAVE THESE INSTRUCTIONS

Read these instructions carefully and look at the equipment to become familiar with it before trying to install, operate, service or maintain it. The following safety messages may appear throughout this manual or on the equipment to warn of potential hazards or to call attention to information that clarifies or simplifies a procedure.

The addition of this symbol to a “Danger” or “Warning” safety message indicates that an electrical hazard exists which will result in personal injury if the instructions are not followed.

This is the safety alert symbol. It is used to alert you to potential personal injury hazards. Obey all safety messages with this symbol to avoid possible injury or death.

⚠ DANGER

DANGER indicates a hazardous situation which, if not avoided, **will result in** death or serious injury.

Failure to follow these instructions will result in death or serious injury.

⚠ WARNING

WARNING indicates a hazardous situation which, if not avoided, **could result in** death or serious injury.

Failure to follow these instructions can result in death, serious injury, or equipment damage.

⚠ CAUTION

CAUTION indicates a hazardous situation which, if not avoided, **could result in** minor or moderate injury.

Failure to follow these instructions can result in injury or equipment damage.

NOTICE

NOTICE is used to address practices not related to physical injury. The safety alert symbol shall not be used with this type of safety message.

Failure to follow these instructions can result in equipment damage.

Please Note

Electrical equipment should only be installed, operated, serviced, and maintained by qualified personnel. No responsibility is assumed by Schneider Electric for any consequences arising out of the use of this material.

A qualified person is one who has skills and knowledge related to the construction, installation, and operation of electrical equipment and has received safety training to recognize and avoid the hazards involved.

Electromagnetic Compatibility

NOTICE

RISK OF ELECTROMAGNETIC DISTURBANCE

This is a product Category C3 according to IEC 62040-2. This is a product for commercial and industrial applications in the second environment - installation restrictions or additional measures may be needed to prevent disturbances. The second environment includes all commercial, light industry, and industrial locations other than residential, commercial, and light industrial premises directly connected without intermediate transformer to a public low-voltage mains supply. The installation and cabling must follow the electromagnetic compatibility rules, e.g.:

- the segregation of cables,
- the use of shielded or special cables when relevant,
- the use of grounded metallic cable tray and supports.

Failure to follow these instructions can result in equipment damage.

Safety Precautions

DANGER

HAZARD OF ELECTRIC SHOCK, EXPLOSION, OR ARC FLASH

All safety instructions in this document must be read, understood and followed.

Failure to follow these instructions will result in death or serious injury.

DANGER

HAZARD OF ELECTRIC SHOCK, EXPLOSION, OR ARC FLASH

Read all instructions in the installation manual before installing or working on this UPS system.

Failure to follow these instructions will result in death or serious injury.

DANGER

HAZARD OF ELECTRIC SHOCK, EXPLOSION, OR ARC FLASH

Do not install the UPS system until all construction work has been completed and the installation room has been cleaned. If additional construction work is needed in the installation room after the UPS has been installed, turn off the UPS and cover the UPS with the protective packaging bag the UPS was delivered in.

Failure to follow these instructions will result in death or serious injury.

DANGER

HAZARD OF ELECTRIC SHOCK, EXPLOSION, OR ARC FLASH

- The product must be installed according to the specifications and requirements as defined by Schneider Electric. It concerns in particular the external and internal protections (upstream breakers, battery breakers, cabling, etc.) and environmental requirements. No responsibility is assumed by Schneider Electric if these requirements are not respected.
- After the UPS system has been electrically wired, do not start up the system. Start-up must only be performed by Schneider Electric.

Failure to follow these instructions will result in death or serious injury.

DANGER

HAZARD OF ELECTRIC SHOCK, EXPLOSION, OR ARC FLASH

The UPS system must be installed according to local and national regulations. Install the UPS according to:

- IEC 60364 (including 60364-4-41– protection against electric shock, 60364-4-42 – protection against thermal effect, and 60364-4-43 – protection against overcurrent), **or**
- NEC NFPA 70, **or**
- Canadian Electrical Code (C22.1, Part 1)

depending on which one of the standards apply in your local area.

Failure to follow these instructions will result in death or serious injury.

DANGER

HAZARD OF ELECTRIC SHOCK, EXPLOSION, OR ARC FLASH

- Install the UPS system in a temperature controlled indoor environment free of conductive contaminants and humidity.
- Install the UPS system on a non-flammable, level and solid surface (e.g. concrete) that can support the weight of the system.

Failure to follow these instructions will result in death or serious injury.

DANGER

HAZARD OF ELECTRIC SHOCK, EXPLOSION, OR ARC FLASH

The UPS is not designed for and must therefore not be installed in the following unusual operating environments:

- Damaging fumes
- Explosive mixtures of dust or gases, corrosive gases, or conductive or radiant heat from other sources
- Moisture, abrasive dust, steam or in an excessively damp environment
- Fungus, insects, vermin
- Salt-laden air or contaminated cooling refrigerant
- Pollution degree higher than 2 according to IEC 60664-1
- Exposure to abnormal vibrations, shocks, and tilting
- Exposure to direct sunlight, heat sources, or strong electromagnetic fields

Failure to follow these instructions will result in death or serious injury.

DANGER

HAZARD OF ELECTRIC SHOCK, EXPLOSION, OR ARC FLASH

Do not drill or cut holes for cables or conduits with the gland plates installed and do not drill or cut holes in close proximity to the UPS.

Failure to follow these instructions will result in death or serious injury.

WARNING

HAZARD OF ARC FLASH

Do not make mechanical changes to the product (including removal of cabinet parts or drilling/cutting of holes) that are not described in the installation manual.

Failure to follow these instructions can result in death, serious injury, or equipment damage.

NOTICE

RISK OF OVERHEATING

Respect the space requirements around the UPS system and do not cover the UPS ventilation openings when the UPS system is in operation.

Failure to follow these instructions can result in equipment damage.

NOTICE

RISK OF EQUIPMENT DAMAGE

Do not connect the UPS output to regenerative load systems including photovoltaic systems and speed drives.

Failure to follow these instructions can result in equipment damage.

Electrical Safety

⚠⚠DANGER

HAZARD OF ELECTRIC SHOCK, EXPLOSION OR ARC FLASH

- Electrical equipment must be installed, operated, serviced, and maintained only by qualified personnel.
- Apply appropriate personal protective equipment (PPE) and follow safe electrical work practices.
- Turn off all power supplying the UPS system before working on or inside the equipment.
- Before working on the UPS system, check for hazardous voltage between all terminals including the protective earth.
- The UPS contains an internal energy source. Hazardous voltage can be present even when disconnected from the utility/mains supply. Before installing or servicing the UPS system, ensure that the units are OFF and that utility/mains and batteries are disconnected. Wait five minutes before opening the UPS to allow the capacitors to discharge.
- A disconnection device (e.g. disconnection circuit breaker or switch) must be installed to enable isolation of the system from upstream power sources in accordance with local regulations. This disconnection device must be easily accessible and visible.
- The UPS must be properly earthed/grounded and due to a high leakage current, the earthing/grounding conductor must be connected first.

Failure to follow these instructions will result in death or serious injury.

Battery Safety

⚠⚠DANGER

HAZARD OF ELECTRIC SHOCK, EXPLOSION, OR ARC FLASH

- Battery circuit breakers must be installed according to the specifications and requirements as defined by Schneider Electric.
- Servicing of batteries must only be performed or supervised by qualified personnel knowledgeable of batteries and the required precautions. Keep unqualified personnel away from batteries.
- Disconnect charging source prior to connecting or disconnecting battery terminals.
- Do not dispose of batteries in a fire as they can explode.
- Do not open, alter, or mutilate batteries. Released electrolyte is harmful to the skin and eyes. It may be toxic.

Failure to follow these instructions will result in death or serious injury.

⚠⚠DANGER

HAZARD OF ELECTRIC SHOCK, EXPLOSION, OR ARC FLASH

Batteries can present a risk of electric shock and high short-circuit current. The following precautions must be observed when working on batteries

- Remove watches, rings, or other metal objects.
- Use tools with insulated handles.
- Wear protective glasses, gloves and boots.
- Do not lay tools or metal parts on top of batteries.
- Disconnect the charging source prior to connecting or disconnecting battery terminals.
- Determine if the battery is inadvertently grounded. If inadvertently grounded, remove source from ground. Contact with any part of a grounded battery can result in electric shock. The likelihood of such shock can be reduced if such grounds are removed during installation and maintenance (applicable to equipment and remote battery supplies not having a grounded supply circuit).

Failure to follow these instructions will result in death or serious injury.

⚠⚠DANGER

HAZARD OF ELECTRIC SHOCK, EXPLOSION, OR ARC FLASH

When replacing batteries, always replace with the same type and number of batteries or battery packs.

Failure to follow these instructions will result in death or serious injury.

NOTICE

RISK OF EQUIPMENT DAMAGE

- Wait until the system is ready to be powered up before installing batteries in the system. The time duration from battery installation until the UPS system is powered up must not exceed 72 hours or 3 days.
- Batteries must not be stored more than six months due to the requirement of recharging. If the UPS system remains de-energized for a long period, Schneider Electric recommends that you energize the UPS system for a period of 24 hours at least once every month. This charges the batteries, thus avoiding irreversible damage.

Failure to follow these instructions can result in equipment damage.

Specifications

Input Specifications 400 V

UPS rating	120 kW	150 kW
Voltage (V)	**380/400/415**	**380/400/415**
Connections	4-wire (L1, L2, L3, N, PE) WYE (single mains)[1] 3-wire (L1, L2, L3, PE) WYE (dual mains)[1 2]	
Input voltage range (V)	380 V: 331-437 400 V: 340-460 415 V: 353-477	
Frequency range (Hz)	40-70	
Nominal input current (A)	189/180/173	237/225/217
Maximum input current (A)	227/216/208	273/270/260
Input current limitation (A)	234/222/214	273/273/268
Input power factor	0.99 at >25% load, 0.95 at >15% load	
Total harmonic distortion (THDI)	<3% at 100% load	
Maximum short circuit rating	65 kA RMS	
Protection	Built-in backfeed protection and fuses	
Ramp-in	Programmable and adaptive 1-40 seconds	

Bypass Specifications 400 V

UPS rating	120 kW	150 kW
Voltage (V)	**380/400/415**	**380/400/415**
Connections	4-wire (L1, L2, L3, N, PE) WYE	
Bypass voltage range (V)	380 V: 342-418 400 V: 360-440 415 V: 374-457	
Frequency range (Hz)	50/60 ± 1, 50/60 ± 3, 50/60 ± 10 (user selectable)	
Nominal bypass current (A)	184/175/169	230/219/211
Nominal neutral current (A)	263/250/241	263/250/241
Maximum short circuit rating[3]	65 kA RMS	
Protection	Built-in backfeed protection and fuses Internal fuse specifications: Rated 400 A, prearcing 52 kA^2s	

1. TN and TT power distribution systems are supported. Corner (line) grounding is not supported.
2. **Only for dual mains system with upstream 4-pole breakers**: Install an N connection with the input cables (L1, L2, L3, N, PE). Refer to earthing schematics for TN-S dual mains 4-pole circuit breaker.
3. Conditioned by the internal fuse rated 400 A, prearcing 52 kA^2s.

Output Specifications 400 V

UPS rating	**120 kW**	**150 kW**
Voltage (V)	**380/400/415**	**380/400/415**
Connections	4-wire (L1, L2, L3, N, PE)	
Output voltage regulation	Symmetrical load ± 1% Asymmetrical load ± 3%	
Overload capacity	150% for 1 minute (in normal operation) 125% for 10 minutes (in normal operation) 125% for 1 minute (in battery operation) 110% continuous (bypass operation) 1000% for 100 milliseconds (bypass operation)	
Dynamic load response	± 5% after 2 milliseconds ± 1% after 50 milliseconds	
Output power factor	1	
Nominal output current (A)	182/173/167	228/217/209
Frequency regulation (Hz)	50/60 Hz bypass synchronized – 50/60 Hz ± 0.1% free-running	
Synchronized slew rate (Hz/sec)	Programmable to 0.25, 0.5, 1, 2, 4, 6	
Output performance classification (according to IEC/ EN62040-3)	VFI-SS-111	
Total harmonic distortion (THDU)	<1% for linear load <5% for non-linear load	
Load crest factor	2.5	
Load power factor	From 0.7 leading to 0.7 lagging without any derating	

Battery Specifications 400 V

DANGER

HAZARD OF ELECTRIC SHOCK, EXPLOSION, OR ARC FLASH

Protection of the energy storage device: An overcurrent protective device must be located in close proximity to the energy storage device.

Failure to follow these instructions will result in death or serious injury.

UPS rating	**120 kW**	**150 kW**
Charging power in % of output power at 0-40% load[4]	80%	
Charging power in % of output power at 100% load	20%[5]	
Maximum charging power (at 0-40% load) (kW)[4]	96	120
Maximum charging power (at 100% load) (kW)	24	30
Nominal battery voltage (VDC)	40-48 battery blocks: 480-576	
Nominal float voltage (VDC)	40-48 battery blocks: 545-654	
Maximum boost voltage (VDC)	720 for 48 battery blocks	
Temperature compensation (per cell)	-3.3mV/°C, for T ≥ 25 °C – 0mV/°C, for T < 25 °C	
End of discharge voltage (full load) (VDC)	384	
Battery current at full load and nominal battery voltage (A)[6] (A)	260	326
Battery current at full load and minimum battery voltage (A)[6] (A)	326	407
Ripple current	< 5% C20 (5 minute runtime)	
Battery test	Manual/automatic (selectable)	
Maximum short circuit rating	10 kA	

4. Values based on 48 battery blocks.
5. At 380 V only 15% for 150 kW.
6. Values based on 40 battery blocks.

Recommended Cable Sizes 400 V

⚠⚠ DANGER

HAZARD OF ELECTRIC SHOCK, EXPLOSION, OR ARC FLASH

All wiring must comply with all applicable national and/or electrical codes. The maximum allowable cable size is 150 mm².

Failure to follow these instructions will result in death or serious injury.

The maximum number of cable connections per busbar: 2 on input/output/bypass busbars; 4 on DC busbars; 6 on N/PE busbars.

NOTE: Overcurrent protection is to be provided by others.

Cable sizes in this manual are based on table B.52.3 and table B.52.5 of IEC 60364-5-52 with the following assertions:

- 90 °C conductors
- An ambient temperature of 30 °C
- Use of copper or aluminum conductors
- Installation method C

PE cable size is based on table 54.2 of IEC 60364-4-54.

If the ambient temperature is greater than 30 °C, larger conductors are to be selected in accordance with the correction factors of the IEC.

NOTE: The DC cable sizes given here are recommendations – Always follow the specific instructions in the battery solution documentation for DC cable sizes and ensure that the DC cable sizes match the battery breaker rating.

UPS rating	**120 kW**		**150 kW**	
	Copper	**Aluminum**	**Copper**	**Aluminum**
Input phases (mm²)	95	120	120	150
Input PE (mm²)	50	70	70	95
Bypass/output phases (mm²)	70	95	95	120
Bypass PE/output PE (mm²)	35	50	50	70
Neutral (mm²)[7]	95	NA	120	NA
DC phases (mm²)[8]	95	120	120	NA
DC PE (mm²)	50	70	70	NA

7. Neutral conductor is sized to handle 1.73 times phase current in case of high harmonic content from non-linear loads. If non or less harmonic currents are expected, neutral conductor can be sized accordingly but not less than the phase conductor.
8. DC cables are sized according to 40 battery blocks.

Recommended Upstream Protection 400 V

NOTE: For local directives which require 4-pole circuit breakers: If neutral conductor is expected to carry a high current, due to line-neutral non-linear load, the circuit breaker must be rated according to expected neutral current.

UPS rating	**120 kW**		**150 kW**	
	Input	**Bypass**	**Input**	**Bypass**
Breaker type	NSX250H TM250D (LV431670)	NSX250H TM200 (LV431671)	NSX400H MiC.L2 (LV432695)	NSX250H TM250 (LV431670)
In setting/Io setting	250	200	280	250
Ir setting	250	200	1	250
Im setting/ Isd setting	5-10 x In	5-10 x In	10	5-10 x In

Torque Specifications

Bolt size	**Torque**
M4	1.7 Nm
M5	2.2 Nm
M6	5 Nm
M8	17.5 Nm
M10	30 Nm

Requirements for a Third Party Battery Solution

Battery breaker boxes from Schneider Electric are recommended for the battery interface. Please contact Schneider Electric for more information.

Third Party Battery Breaker Requirements

DANGER

HAZARD OF ELECTRIC SHOCK, EXPLOSION, OR ARC FLASH

All selected battery breakers must be equipped with instantaneous trip functionality with an undervoltage release coil or a shunt trip release coil.

Failure to follow these instructions will result in death or serious injury.

NOTE: There are more factors to consider when selecting a battery breaker than the requirements listed below. Please contact Schneider Electric for more information.

Design Requirements for Battery Breaker

Battery breaker rated DC voltage > Normal battery voltage	The normal voltage of the battery configuration is defined as the highest nominal occurring battery voltage. This can be equivalent to the float voltage which may be defined as **number of battery blocks x number of cells x cell float voltage**.
Battery breaker rated DC current > Rated discharge battery current	This current is controlled by the UPS and must include maximum discharge current. This will typically be the current at the end of discharge (minimum operation DC voltage or in overload condition or a combination).
DC landings	Two DC landings for DC cables are required.
AUX switches for monitoring	One AUX switch must be installed in each battery breaker and connected to the UPS. The UPS can monitor up to two battery breakers.
Short-circuit breaking capability	The short-circuit breaking capability must be higher than the short-circuit DC current of the (largest) battery configuration.
Minimum trip current	The minimum short-circuit current to trip the battery breaker must match the (smallest) battery configuration, to make the breaker trip in case of a short circuit, up to the end of its life time.

Guidance for Organizing Battery Cables

NOTE: For 3rd party batteries, use only high rate batteries for UPS applications.

NOTE: When the battery bank is placed remotely, the organizing of the cables is important to reduce voltage drop and inductance. The distance between the battery bank and the UPS must not exceed 200 m (656 ft). Contact Schneider Electric for installations with a longer distance.

NOTE: To minimize the risk of electromagnetic radiation, it is highly recommended to follow the below guidance and to use grounded metallic tray supports.

Cable Length	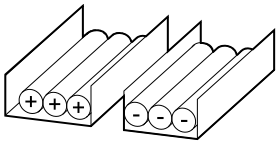	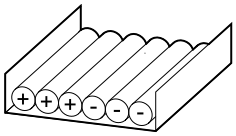	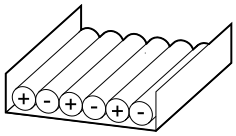	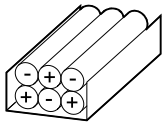
<30 m	Not recommended	Acceptable	Recommended	Recommended
31–75 m	Not recommended	Not recommended	Acceptable	Recommended
76–150 m	Not recommended	Not recommended	Acceptable	Recommended
151–200 m	Not recommended	Not recommended	Not recommended	Recommended

Environment

	Operating	**Storage**
Temperature	0 °C to 50 °C with load derating above 40 ° C.[9]	-15 °C to 40 °C for systems with batteries. -25 °C to 55 °C for systems without batteries.
Relative humidity	0-95% non-condensing	10-80% non-condensing
Elevation	Designed for operation in 0-3000 m elevation. Derating required from 1000-3000 m: Up to 1000 m: 1.000 Up to 1500 m : 0.975 Up to 2000 m: 0.950 Up to 2500 m: 0.925 Up to 3000 m: 0.900	
Audible noise one meter from unit	400 V: 57 dB at 70% load, 65 dB at 100% load	
Protection class	IP21	
Color	RAL 9003, gloss level 85%	

9. For temperatures between 40 °C and 50 °C, derate the load power rating with 2.5% per °C.

UPS Weights and Dimensions

UPS rating	Weight kg	Height mm	Width mm	Depth mm
120-150 kW UPS 400 V	315	1485	521	847

Clearance

NOTE: Clearance dimensions are published for airflow and service access only. Consult with the local safety codes and standards for additional requirements in your local area.

NOTE: The required minimum rear clearance is 150 mm (5.91 in).

Front View of the UPS

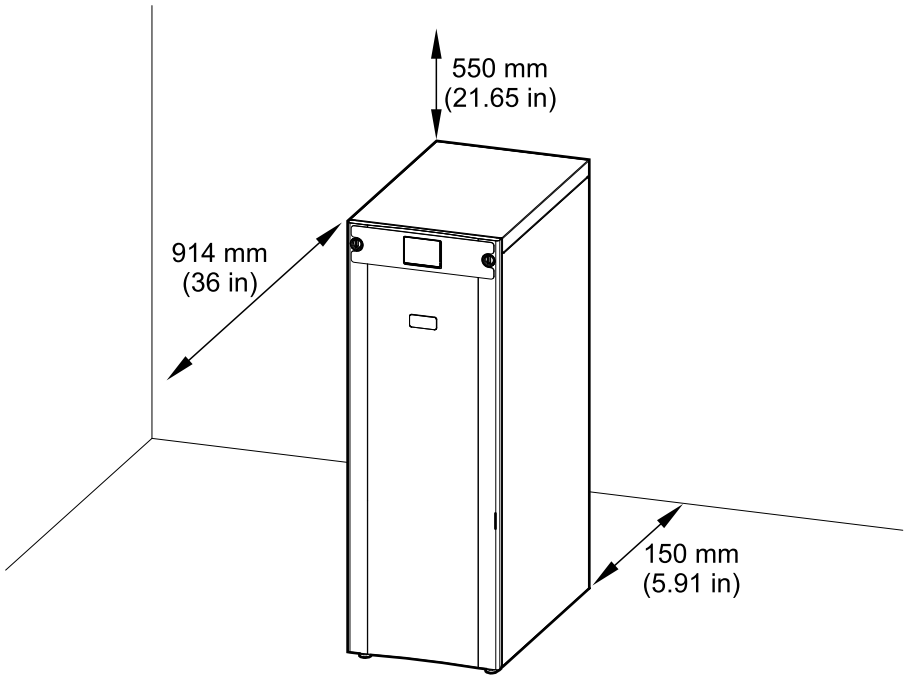

Single System Overview

UIB	Unit input breaker
SSIB	Static switch input breaker
IMB	Internal maintenance breaker
UOB	Unit output breaker
BB	Battery breaker

Single System – Single Mains

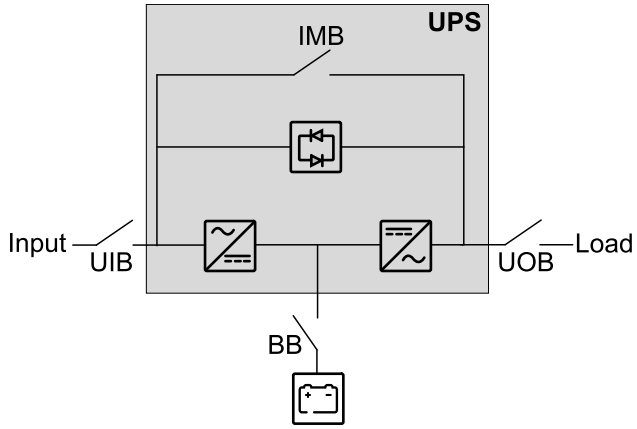

Single System – Dual Mains

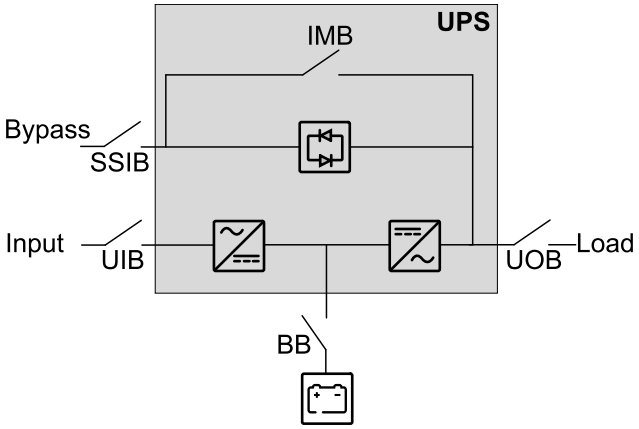

Parallel System Overview

UIB	Unit input breaker
SSIB	Static switch input breaker
IMB	Internal maintenance breaker
UOB	Unit output breaker
SIB	System isolation breaker
BB	Battery breaker
MBB	External maintenance bypass breaker

Simplified 1+1 Parallel System

Galaxy VS can support 2 UPSs in a simplified 1+1 parallel system for redundancy with shared unit input breaker UIB and static switch input breaker SSIB.

Simplified 1+1 Parallel System – Single Mains

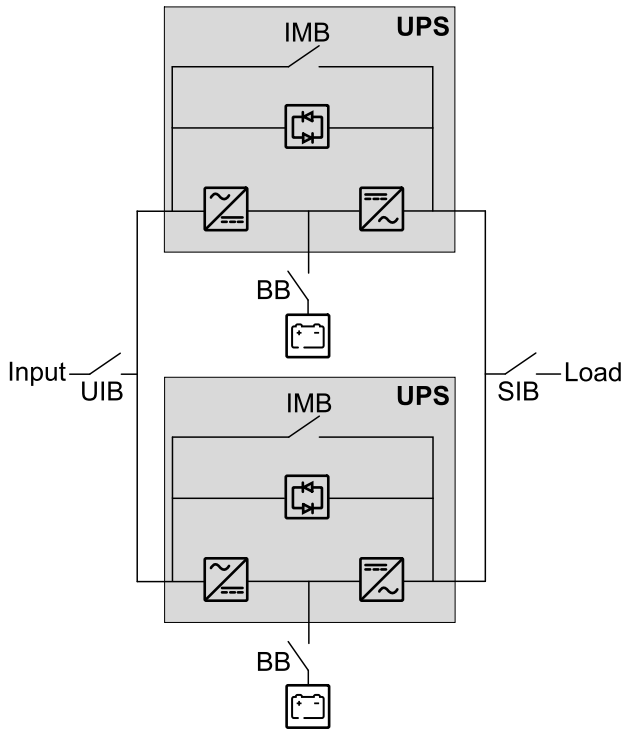

Simplified 1+1 Parallel System – Dual Mains

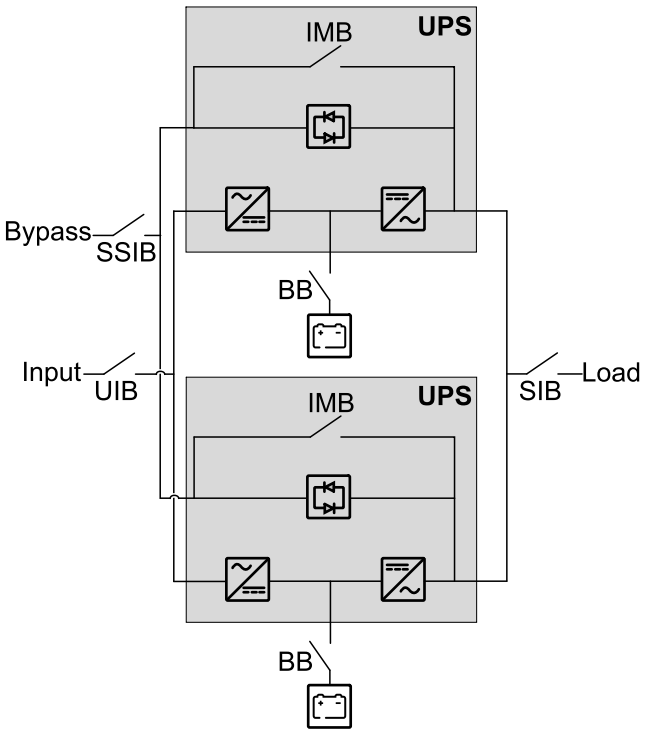

Parallel System with Individual Unit Input Breaker UIB and Static Switch Input Breaker SSIB

Galaxy VS can support up to 3 UPSs in parallel for capacity and up to 3+1 UPSs in parallel for redundancy with individual unit input breaker UIB and static switch input breaker SSIB.

NOTE: The internal maintenance breaker IMB can only be used in a simplified 1+1 parallel system. In any other parallel system, an external maintenance bypass breaker MBB must be provided and the internal maintenance breaker IMB* must be padlocked in the open position.

Parallel System – Single Mains

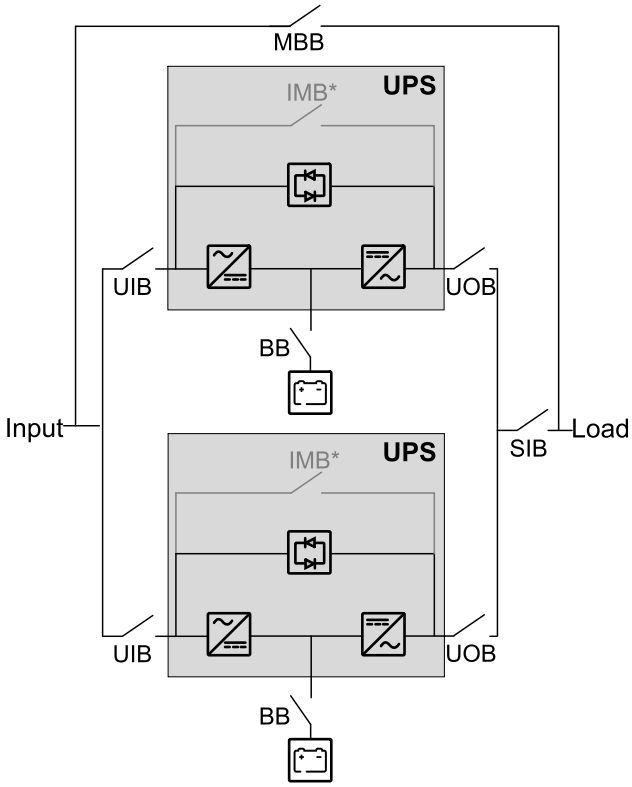

Parallel System – Dual Mains

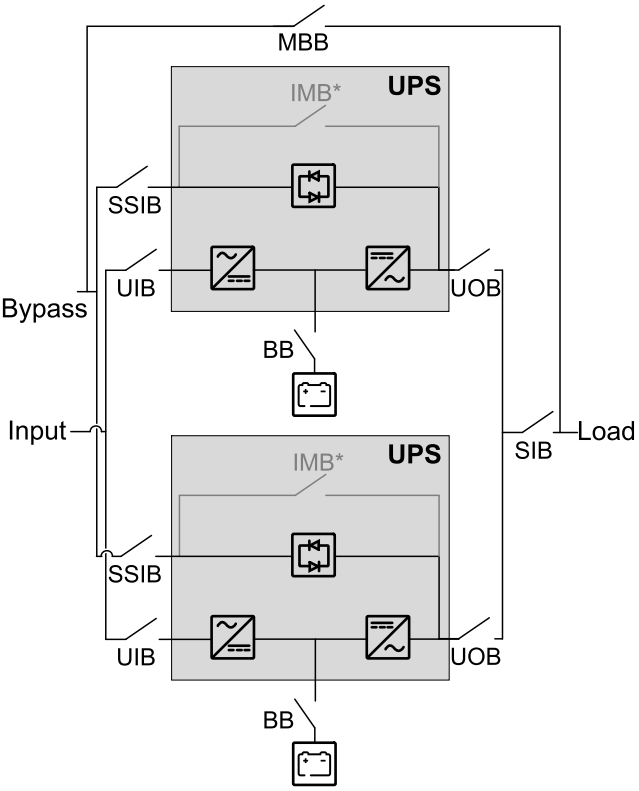

Parallel System with Shared Unit Input Breaker UIB and Static Switch Input Breaker SSIB

Galaxy VS can support up to 3 UPSs in parallel for capacity and up to 3+1 UPSs in parallel for redundancy with shared unit input breaker UIB and static switch input breaker SSIB.

NOTE: The internal maintenance breaker IMB can only be used in a simplified 1+1 parallel system. In any other parallel system, an external maintenance bypass breaker MBB must be provided and the internal maintenance breaker IMB* must be padlocked in the open position.

Parallel System – Single Mains

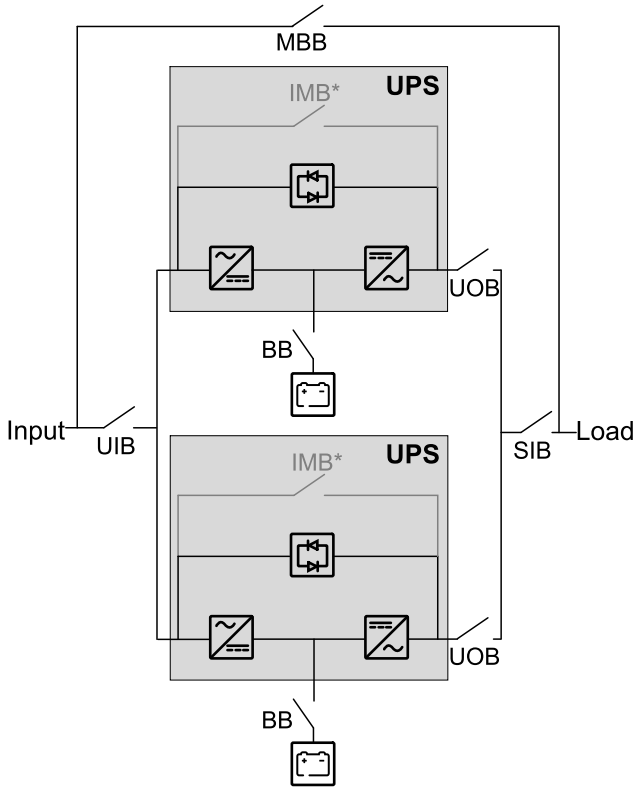

Parallel System – Dual Mains

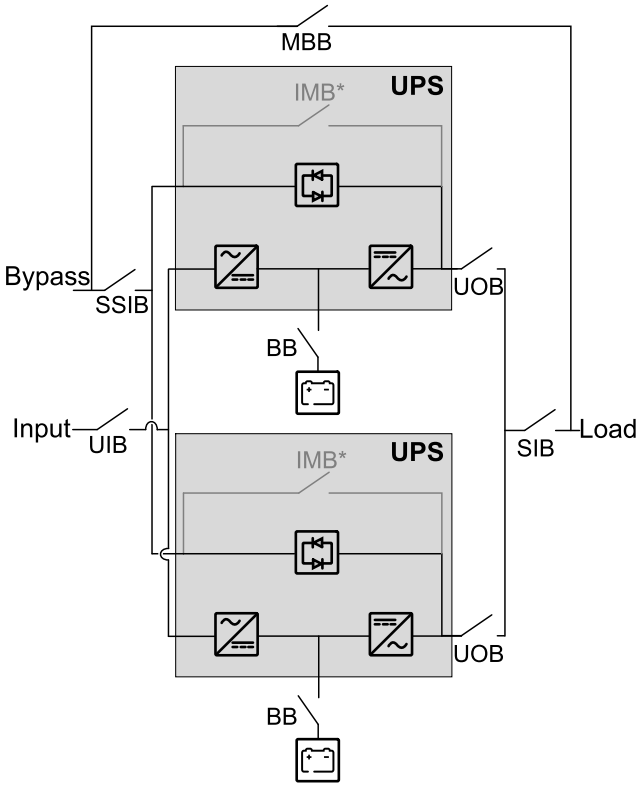

Overview of Installation Kits

Installation Kit 0M-100883

Part	Used in	Number of units
Spring washer	*Connect the Power Cables, page 34*.	40

Installation Kit 0M-100917

Part	Used in	Number of units
M8 nut with washer	*Prepare the UPS for Earthing System, page 33*.	2
Bonding busbar		1 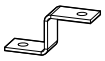

Installation Kit 0M-88357

Part	Used in	Number of units
USB cable	*Connect the Modbus Cables, page 49*.	1
150 Ohm resistor		10
Terminal connector		2

Installation Kit 0J-0M-1160

Part	Used in	Number of units
Temperature sensor	For third-party battery solution, see *Connect the Signal Cables from Switchgear and Third-Party Auxiliary Products, page 40*. Refer to the installation manual for your specific battery solution for information on how to install and connect the temperature sensor.	1

Optional Seismic Kit GVSOPT002

Part	Used in	Number of units
M8 x 20 mm bolt with washer	*Install the Seismic Anchoring (Option), page 32* and *Final Installation, page 52*.	12
Rear anchor		1
Rear anchoring bracket		1
Front anchoring bracket		1 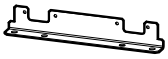
Rear connection plate	Used for installation with an adjacent product. Follow instructions in the installation manual for the adjacent product.	1

Optional Parallel Kit GVSOPT006

Part	Used in	Number of units
PBUS1 cable 0W6268	*Connect the PBUS Cables, page 47*.	1
PBUS2 cable 0W6267		1
AUX switch	*Connect the IMB Signal Cables in a Simplified 1+1 Parallel System, page 43*.	2
This kit contains parts for use with other UPS models which are not relevant for this installation.		

Installation Procedure for Single Systems

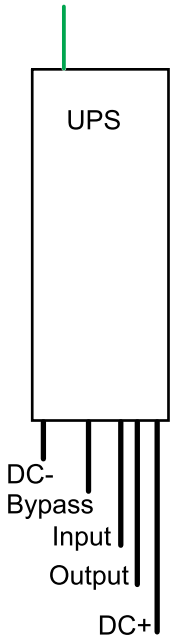

1. *Prepare for Installation, page 27*.
2. **For UPS without preinstalled power modules**: *Install the Power Module(s), page 31*.
3. *Install the Seismic Anchoring (Option), page 32*.
4. Only for TN-C/3-wire earthing system or TN-C-S/4-wire earthing system: *Prepare the UPS for Earthing System, page 33*.
5. *Connect the Power Cables, page 34*.
6. *Connect the Signal Cables, page 38*.
7. *Connect the Signal Cables from Switchgear and Third-Party Auxiliary Products, page 40*.
8. *Connect the External Communication Cables, page 48*.
9. *Add Translated Safety Labels to Your Product, page 51*.
10. *Final Installation, page 52*.

Installation Procedure for Parallel Systems

Simplified 1+1 Parallel System

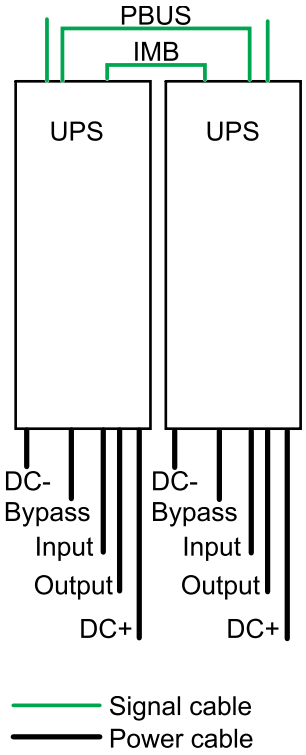

Parallel System

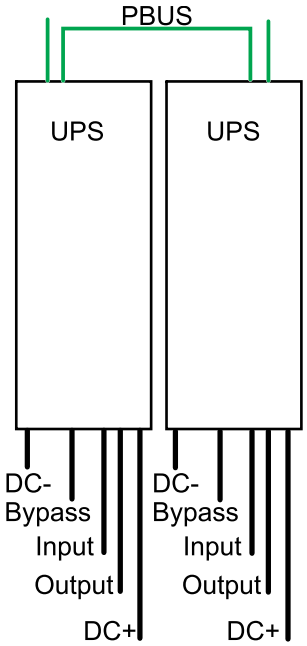

1. *Prepare for Installation, page 27*.
2. **For UPS without preinstalled power modules**: *Install the Power Module(s), page 31*.
3. *Install the Seismic Anchoring (Option), page 32*.
4. Only for TN-C/3-wire earthing system or TN-C-S/4-wire earthing system: *Prepare the UPS for Earthing System, page 33*.
5. *Connect the Power Cables, page 34*.
6. *Connect the Signal Cables, page 38*.
7. *Connect the Signal Cables from Switchgear and Third-Party Auxiliary Products, page 40*.
8. Perform one of the following:
   – **For simplified 1+1 parallel system**: *Connect the IMB Signal Cables in a Simplified 1+1 Parallel System, page 43*.
   – **For parallel system**: Install a padlock on the internal maintenance breaker IMB in the open position on all UPSs in the parallel system.
9. *Connect the PBUS Cables, page 47*.
10. *Connect the External Communication Cables, page 48*.
11. *Add Translated Safety Labels to Your Product, page 51*.
12. *Final Installation, page 52*.

Prepare for Installation

DANGER

HAZARD OF ELECTRIC SHOCK, EXPLOSION, OR ARC FLASH

Do not drill or punch holes for cables or conduits with the gland plate installed and do not drill or punch holes in close proximity to the UPS.

Failure to follow these instructions will result in death or serious injury.

NOTE: Route the signal cables separately from the power cables and route the Class 2/SELV cables separately from the non-Class 2/non-SELV cables.

1. Remove the front panel.

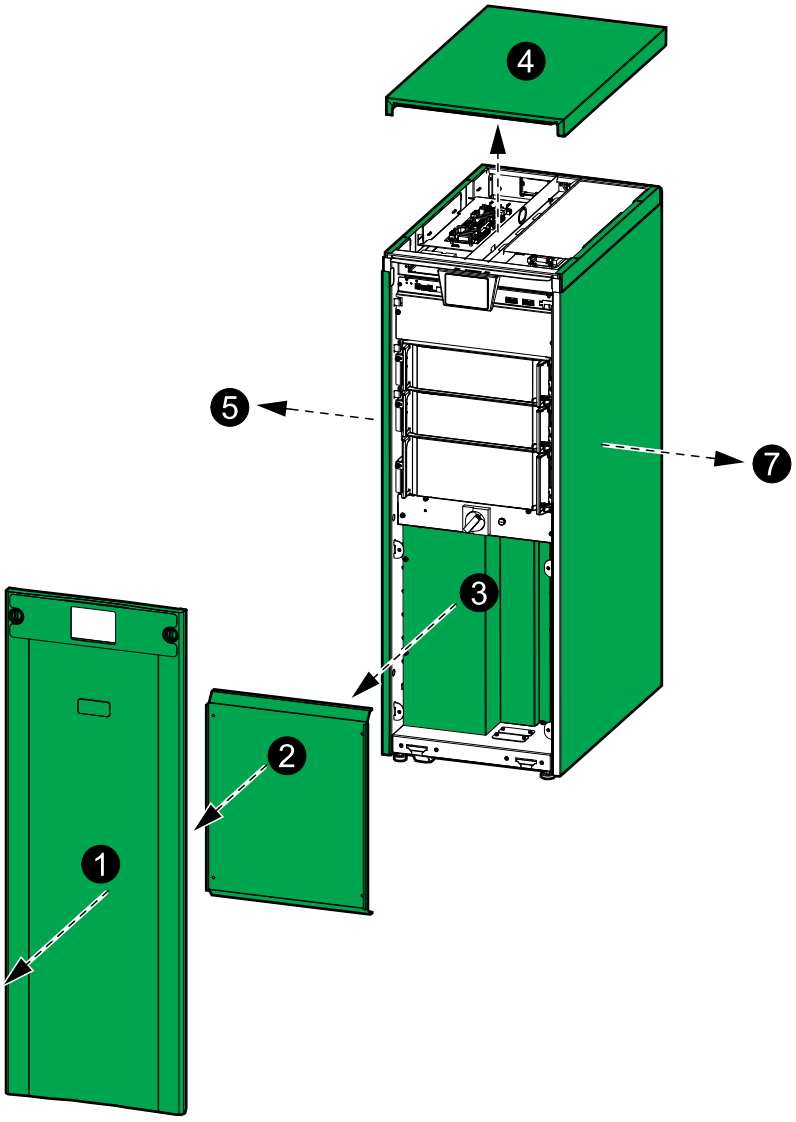

2. Remove the lower front plate.
3. Remove the transparent cover.
4. Remove the top cover:
   a. Remove the screws and tilt the front of the top cover upwards.
   b. Slide the top cover towards the rear to remove it. Tabs in the rear of the top cover must disconnect from the slots in the rear of the UPS.
5. **For installation with adjacent battery cabinet**: Remove the left side panel.

6. **For installation with adjacent battery cabinet**: Remove the lower left side plate for internal DC cabling between the UPS and the adjacent battery cabinet.

Front View of the UPS

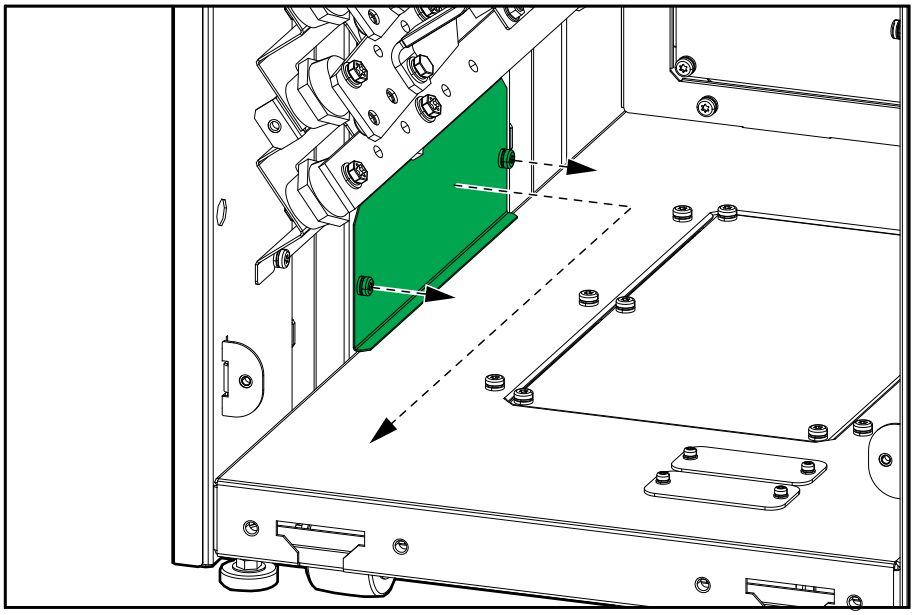

7. **For installation with maintenance bypass cabinet**: Remove the right side panel. The side panel will be reinstalled on the maintenance bypass cabinet.
8. **For installation with maintenance bypass cabinet**: Remove the lower right side plate for internal power cabling between the UPS and the maintenance bypass cabinet.

Front View of the UPS

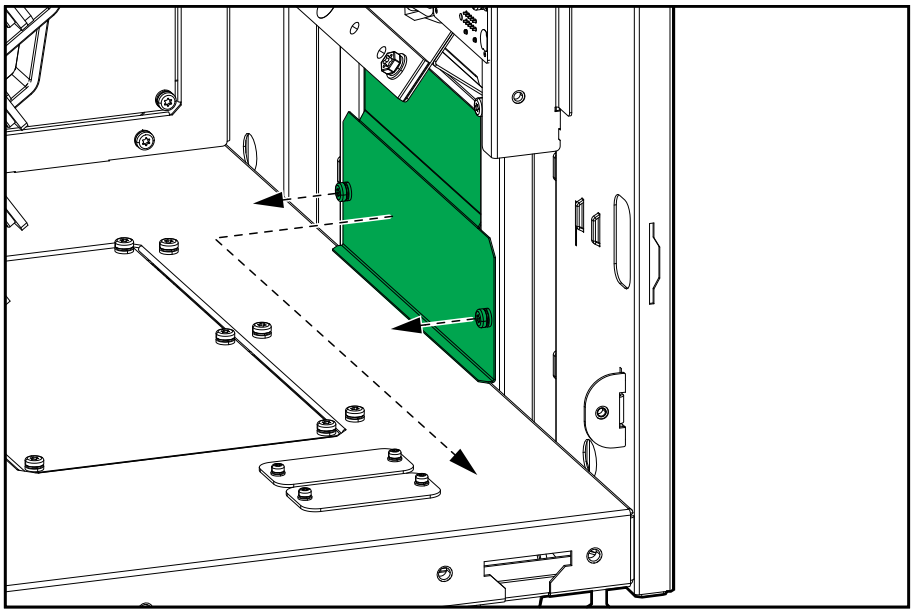

9. Remove the aluminum gland plate in the bottom of the UPS.

Front View of the UPS

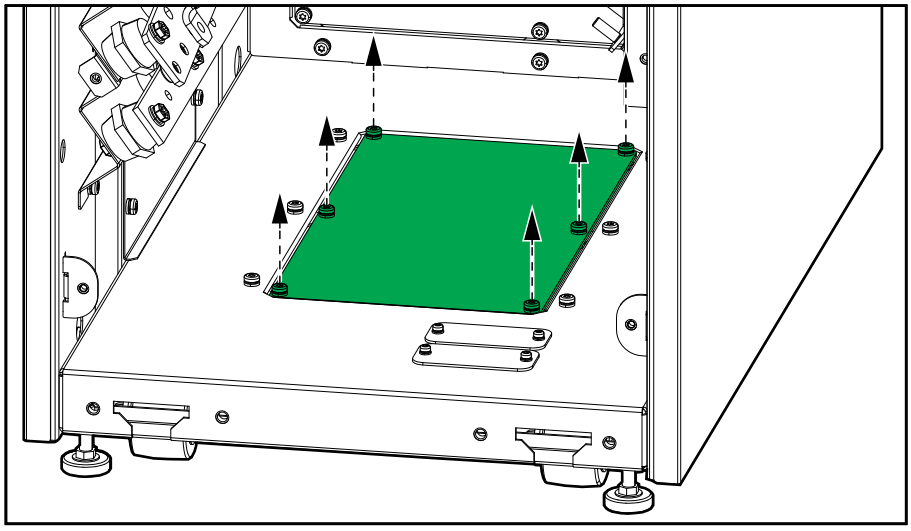

10. **For rear cable entry**: Remove the iron rear plate and install it in the bottom of the UPS.

Front View of the UPS

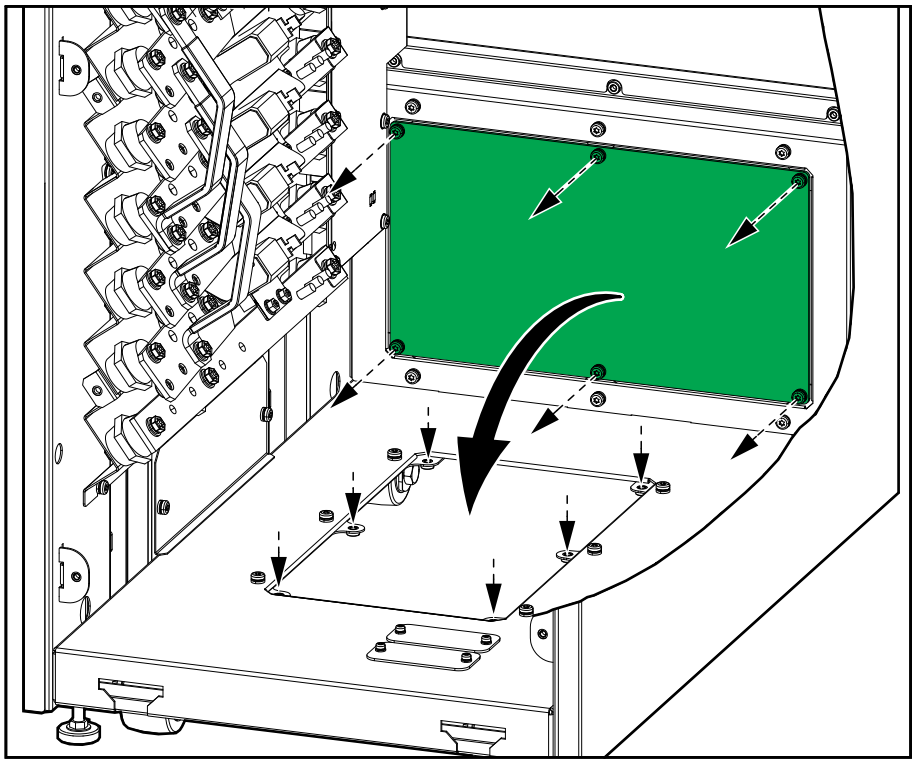

11. Drill/punch holes for power cables/conduits in the aluminum gland plate. Install conduits (not provided), if applicable.
12. Install the aluminum gland plate in the bottom or rear of the UPS.

13. Remove the rear gland plates and the rear brush plates from the UPS.

Rear View of the UPS

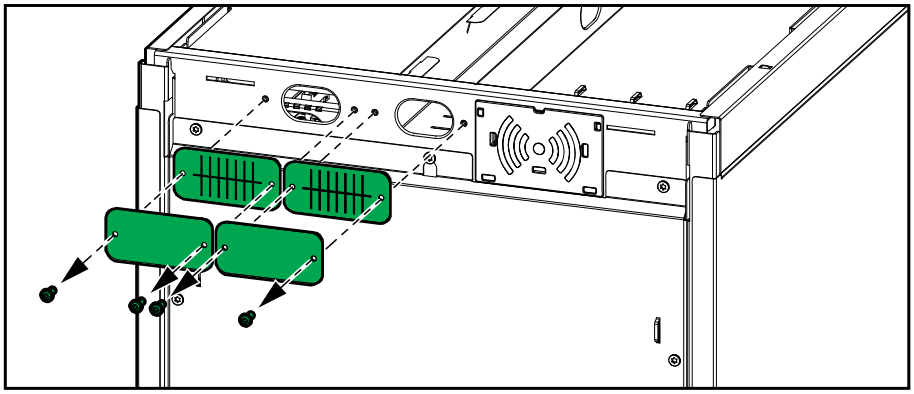

14. Perform one of the following:
    - **For installation without conduits**: Reinstall the brush plates.
    - **For installation with conduits**: Drill a hole in the gland plates for conduits, install conduits, and reinstall the gland plates.

Rear View of the UPS without Conduits

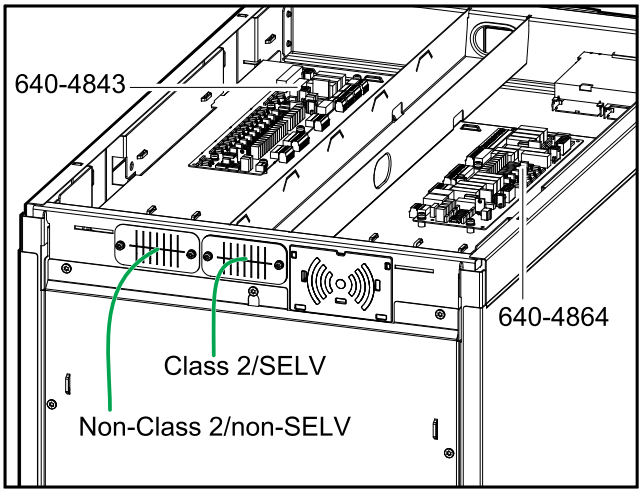

Rear View of the UPS with Conduits

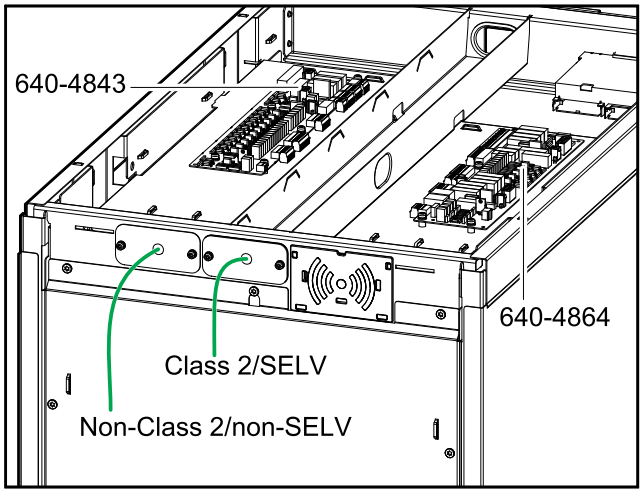

15. Route the non-Class 2/non-SELV signal cables through the left rear brush plate and into the left side of the UPS.
16. Route the external cables that connect to the controller box through the right rear gland plate and through the cable channel to the front of the UPS.
17. Route the Class 2/SELV signal cables through the right rear brush plate and into the right side of the UPS.

Install the Power Module(s)

NOTE: Install power modules starting with the bottom shelf.

1. Remove the screw in each side of the empty power module shelf. Remove filler plate, if present.
2. Push the power module onto the shelf.
3. Reinstall the screw in each side of the shelf.

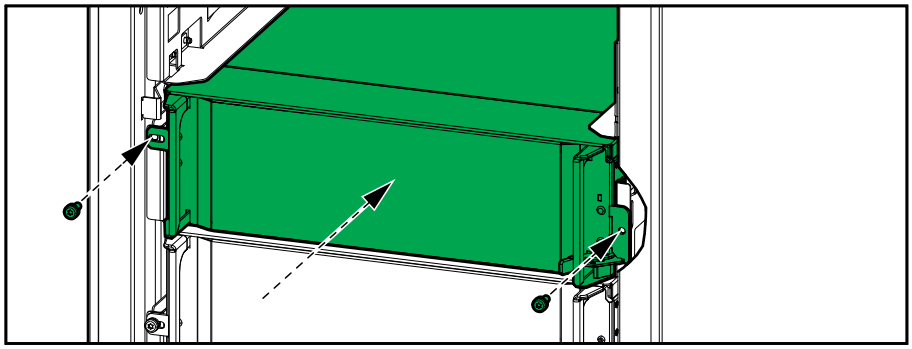

Install the Seismic Anchoring (Option)

1. Mount the rear anchor(s) to the floor. Use appropriate hardware for the floor type – the hole diameter in the rear anchor is ø14 mm.

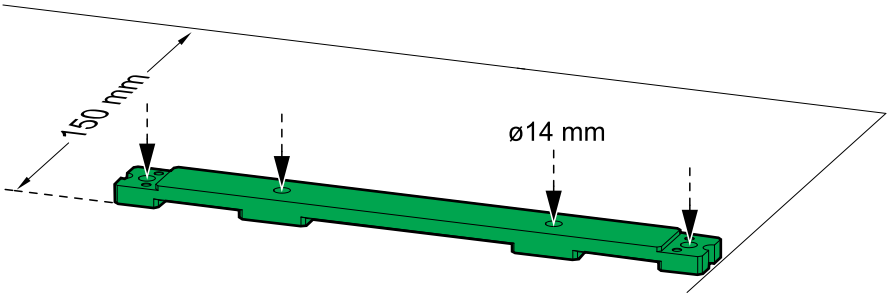

2. Install the rear anchoring bracket on the UPS with the provided M8 bolts.

Rear View of the UPS

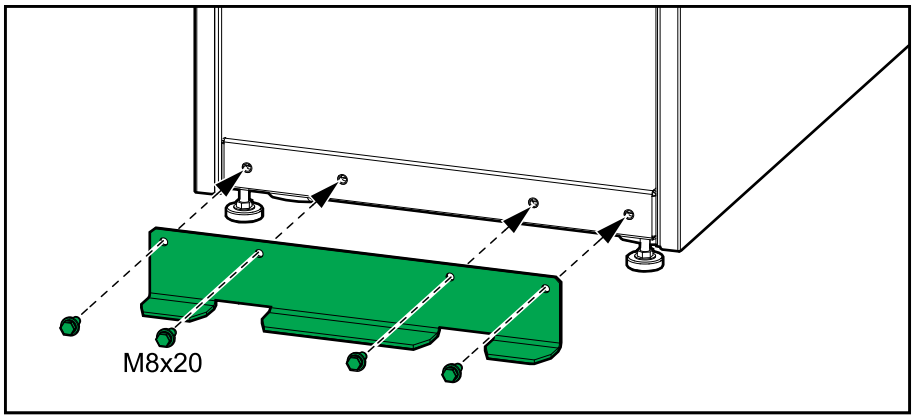

3. Push the UPS into position so the rear anchoring bracket connects to the rear anchor. The front anchoring bracket is installed in the final installation steps.

Rear View of the UPS

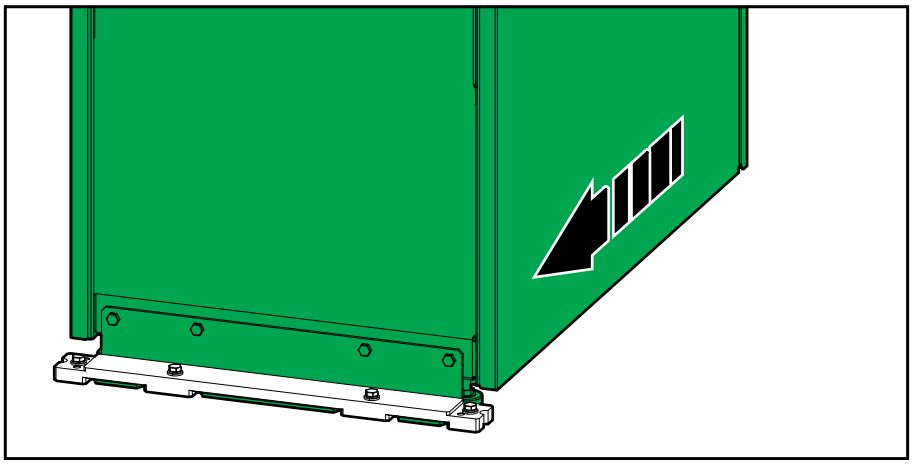

Prepare the UPS for Earthing System

NOTE: The UPS is preconfigured for TNS earthing system.

NOTE: 3–wire installation using a bonding busbar will result in a higher leakage current.

1. **Only for TN-C/3–wire earthing system**: Install the supplied bonding busbar.

Front View of the UPS — TN-C/3–Wire Earthing System

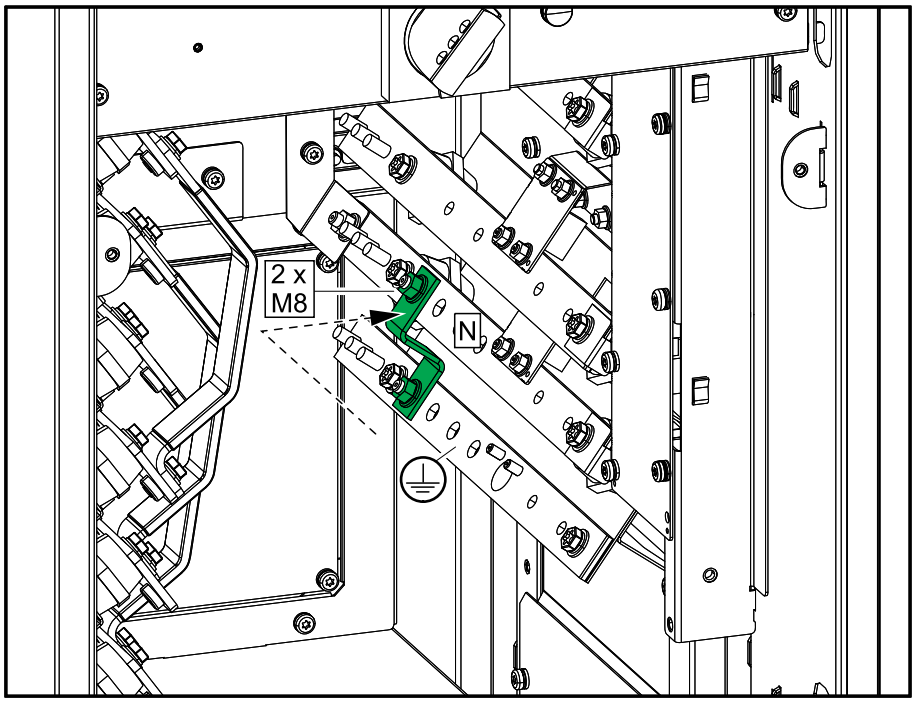

Connect the Power Cables

DANGER

HAZARD OF ELECTRIC SHOCK, EXPLOSION, OR ARC FLASH

In single mains systems where power cables are split due to the cable size restriction, use the bypass busbars for the second input cable set. There is not enough space to land two input cable sets on the input busbars due to the single mains jumper busbars.

Failure to follow these instructions will result in death or serious injury.

NOTICE

RISK OF EQUIPMENT DAMAGE

To ensure correct load sharing in bypass operation in a parallel system:

- All bypass cables must be the same length for all UPSs.
- All output cables must be the same length for all UPSs.
- All input cables must be the same length for all UPSs (only required in single mains system).

Failure to follow these instructions can result in equipment damage.

1. **Only for 3-wire systems**:
   a. Remove the RFI bracket. Save the two screws.
   b. Remove the screw in the left side and save it.
   c. Install the RFI bracket in the left side with the three screws.

Front View of the UPS

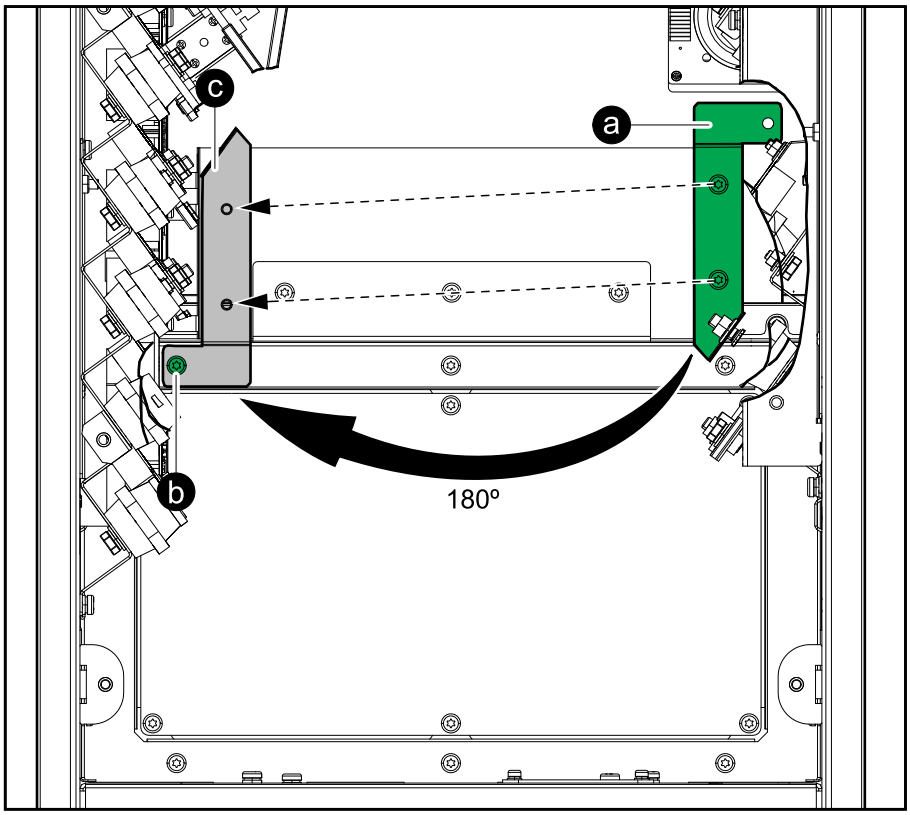

2. **Only for dual mains system**: Remove the three single mains jumper busbars.

Front View of the UPS

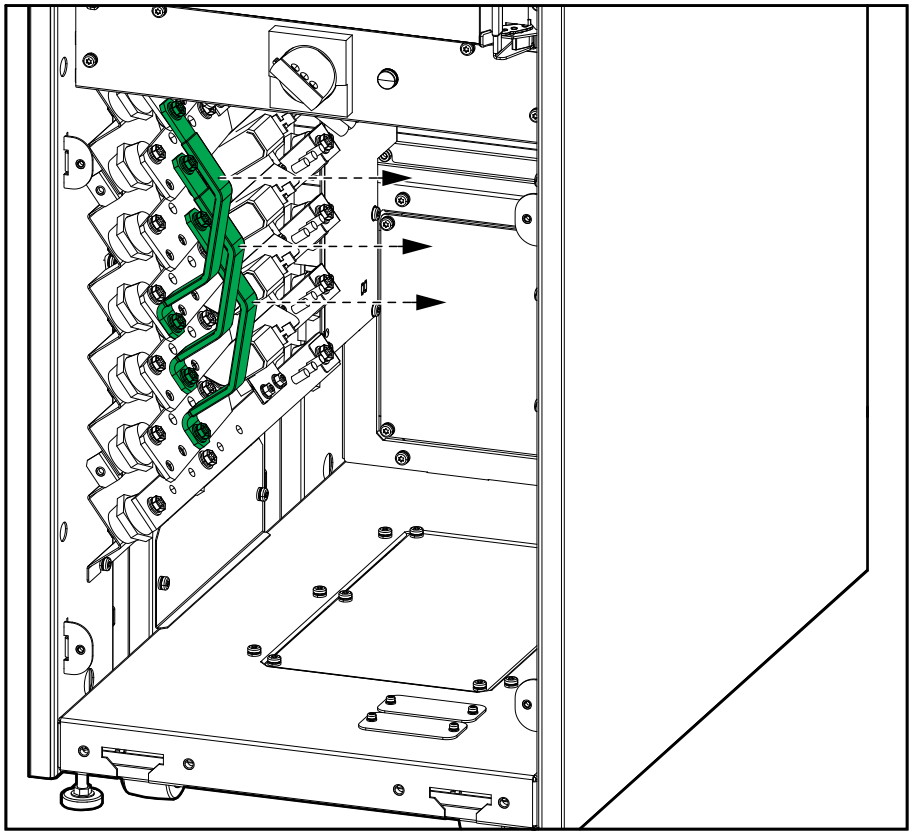

3. Connect the power cables as shown in the described order:

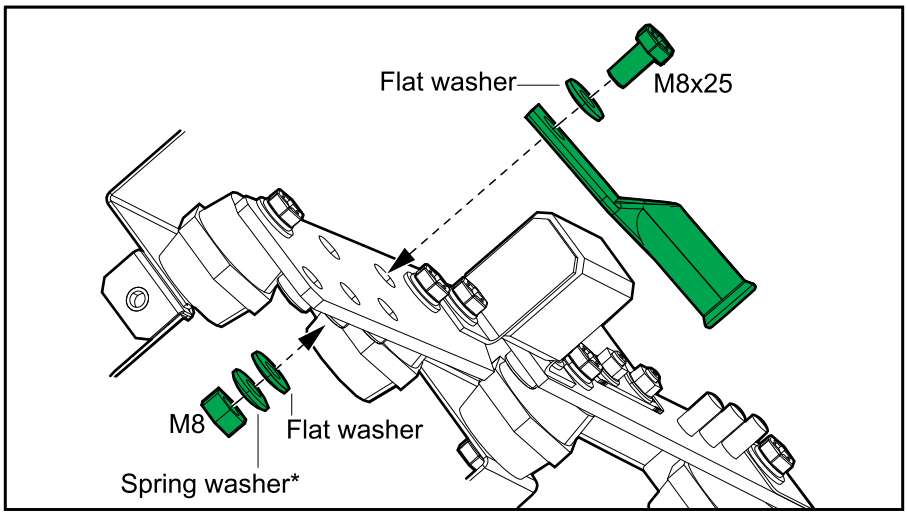

*Provided in kit.

a. Connect the PE cables.

b. Connect the N cables. Connect battery midpoint (if present in battery solution).

c. Connect the DC+ cables.

d. Connect the output cables.

e. Connect the DC- cables.

f. **Only for dual mains system**: Connect the bypass cables.

g. Connect the input cables.

NOTE: Ensure to connect the input cables to the correct input busbars in the top left side of the UPS.

Front View of the UPS – Single Mains System

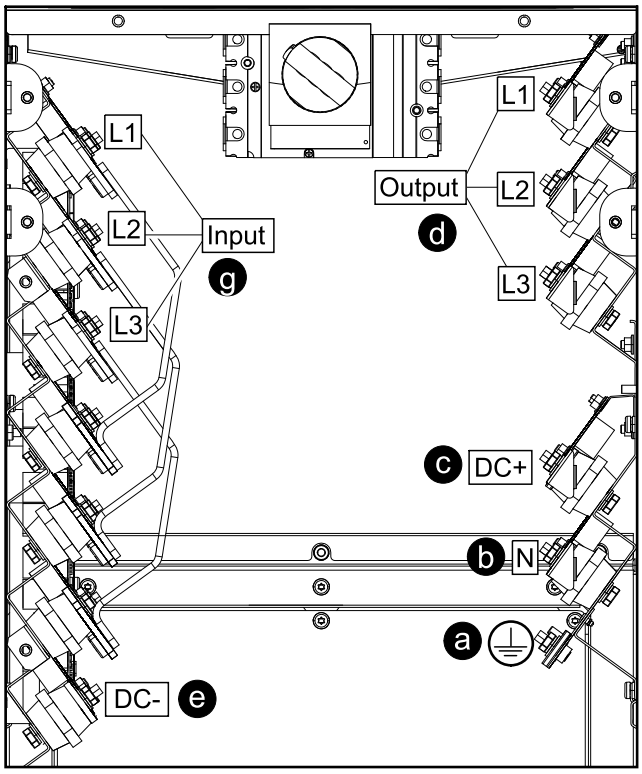

Front View of the UPS – Dual Mains System

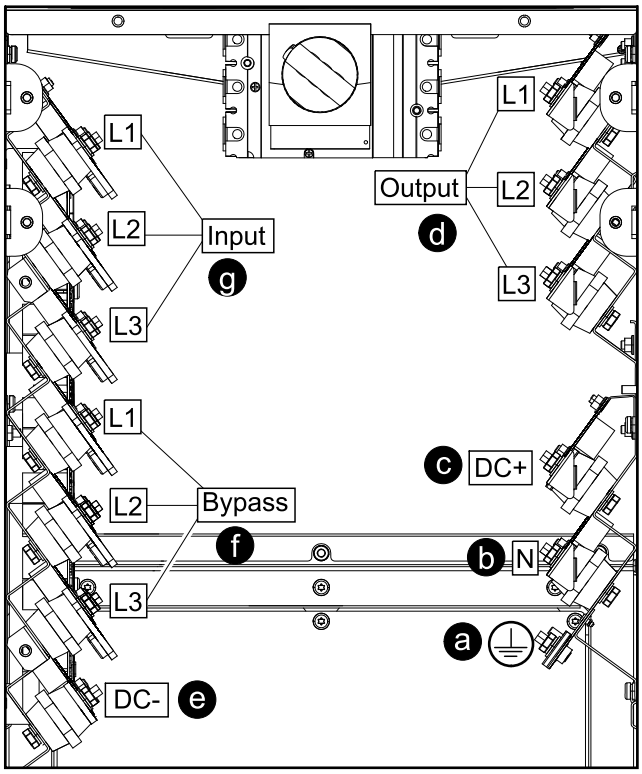

⚠ CAUTION

RISK OF EQUIPMENT DAMAGE

Check the fastening of the cable lugs. If the cable lugs move due to pulling on cables, the bolt can become loose.

Failure to follow these instructions can result in injury or equipment damage.

Connect the Signal Cables

NOTE: Route the signal cables separately from the power cables and route the Class 2/SELV cables separately from the non-Class 2/non-SELV cables.

1. Connect the Class 2/SELV signal cables from the building EPO to board 640–4864 terminal J6600 in the UPS according to one of the options below.

   The EPO circuit is considered Class 2/SELV. Class 2/SELV circuits must be isolated from the primary circuitry. Do not connect any circuit to the EPO terminal block unless it can be confirmed that the circuit is Class 2/SELV.

   EPO Configurations (640–4864 terminal J6600, 1–9)

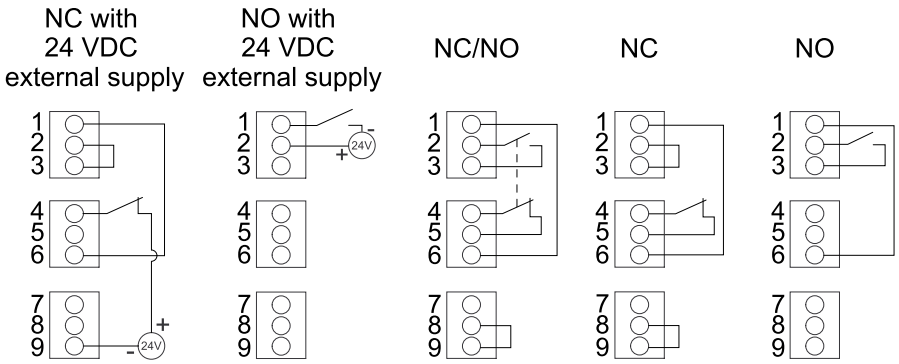

   The EPO input supports 24 VDC.

   NOTE: The default setting for the EPO activation is to turn off the inverter.

   If you want the EPO activation to transfer the UPS into forced static bypass operation instead, please contact Schneider Electric.

2. Connect the Class 2/SELV signal cables from the auxiliary products to board 640–4864 in the UPS. Follow the instructions in the auxiliary product manuals.

3. Connect the Class 2/SELV signal cables to the input contacts and output relays on board 640–4864 in the UPS.

   Do not connect any circuit to the input contacts unless it can be confirmed that the circuit is Class 2/SELV.

   The input contacts support 24 VDC 10 mA. All circuits connected must have the same 0 V reference.

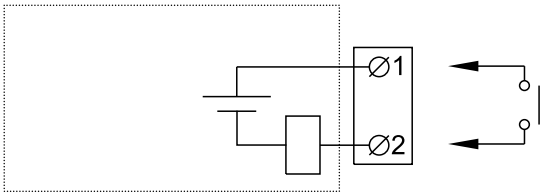

Name	Description	Location
IN _1 (input contact 1)	Configurable input contact	640-4864 terminal J6616, 1–2
IN _2 (input contact 2)	Configurable input contact	640-4864 terminal J6616, 3–4
IN _3 (input contact 3)	Configurable input contact	640-4864 terminal J6616, 5–6
IN _4 (input contact 4)	Configurable input contact	640-4864 terminal J6616, 7–8

   The output relays support 24 VAC/VDC 1 A. All external circuitry must be fused with maximum 1 A fast acting fuses.

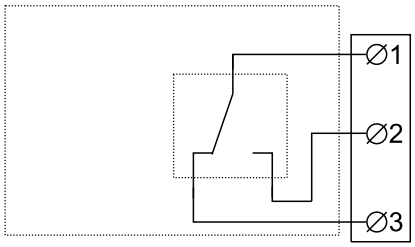

Name	Description	Location
OUT _1 (output relay 1)	Configurable output relay	640–4864 terminal J6617, 1–3
OUT _2 (output relay 2)	Configurable output relay	640–4864 terminal J6617, 4–6
OUT _3 (output relay 3)	Configurable output relay	640–4864 terminal J6617, 7–9
OUT _4 (output relay 4)	Configurable output relay	640–4864 terminal J6617, 10–12

4. Connect the non-Class 2/non-SELV signal cables from the auxiliary products to board 640–4843 in the UPS. Follow the instructions in the auxiliary product manuals.

Connect the Signal Cables from Switchgear and Third-Party Auxiliary Products

NOTE: Route the signal cables separately from the power cables and route the Class 2/SELV cables separately from the non-Class 2/non-SELV cables.

Example of Single System with Third-Party Switchgear

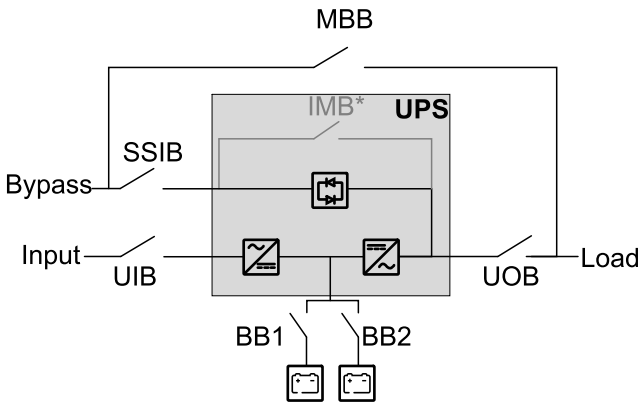

NOTE: The internal maintenance breaker IMB* cannot be used in a system with an external maintenance bypass breaker MBB and the internal maintenance breaker IMB* must be padlocked in the open position.

1. Install the temperature sensor provided with the UPS in the battery solution. In battery cabinets, install the temperature sensor in the top corner of the battery cabinet.

⚠WARNING

HAZARD OF FIRE

Position the temperature sensor as described to ensure correct temperature measurements.

Failure to follow these instructions can result in death, serious injury, or equipment damage.

2. Route the battery temperature sensor cables from the battery solution to the UPS and connect on board 640-4864 in the top of the UPS as shown.

   NOTE: One temperature sensor is provided with the UPS. Contact Schneider Electric if you want to buy an additional temperature sensor.

   NOTE: The battery temperature sensor cables are considered Class 2/SELV. Class 2/SELV circuits must be isolated from the primary circuitry.

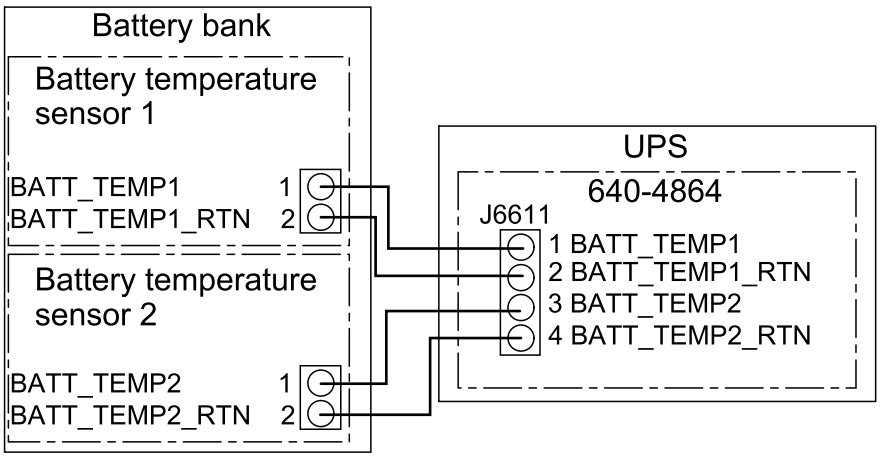

3. Connect signal cables from the breaker indicator lights in your switchgear to board 640-4864 terminal J6618 in the top of the UPS. If an external supply is used, remove jumper from J6618 pin 8 and 9.

   NOTE: The breaker indicator light circuit is considered Class 2/SELV. Class 2/SELV circuits must be isolated from the primary circuitry. Do not connect any circuit to the breaker indicator light terminals unless it can be confirmed that the circuit is Class 2/SELV.

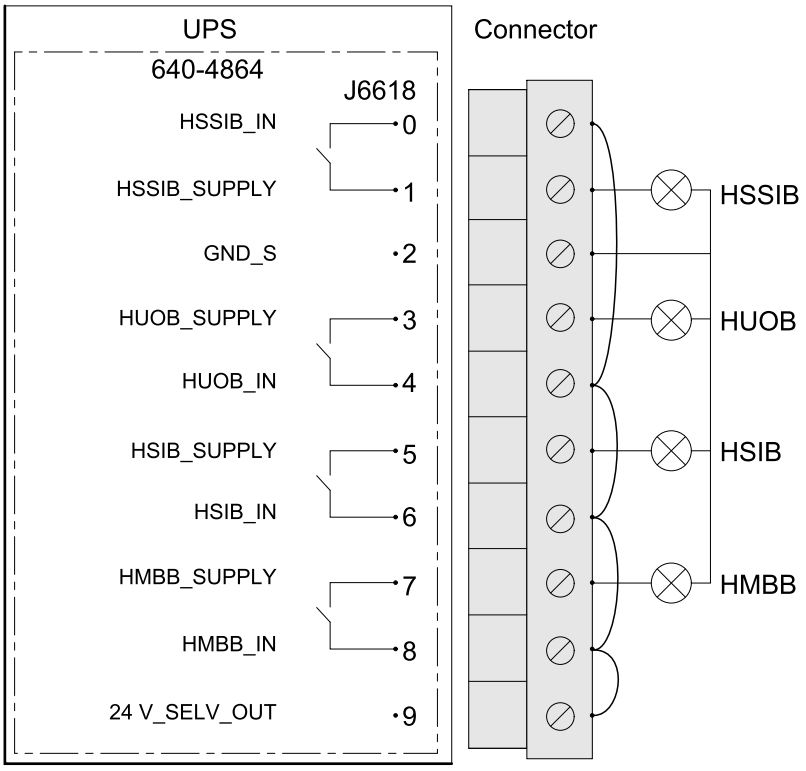

4. Connect signal cables from AUX switches in your switchgear to board 640-4843 in the top of the UPS.

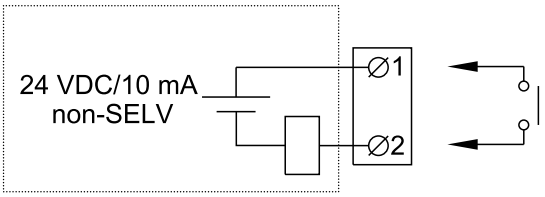

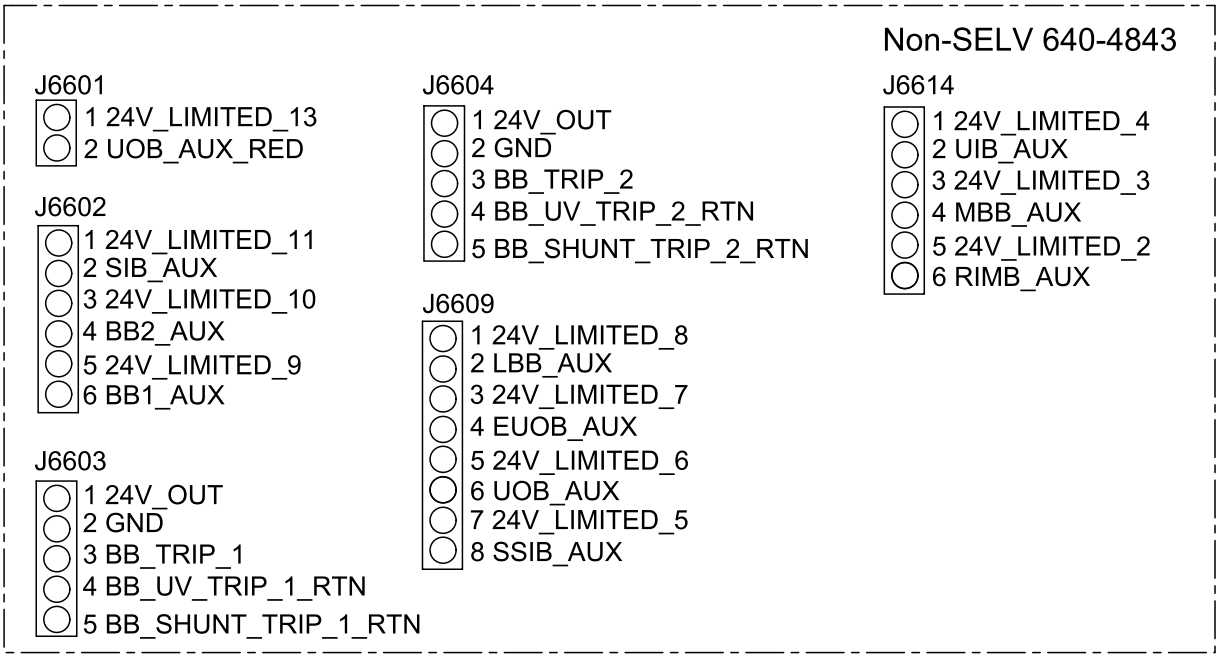

Terminal number	Function	Connection
J6601	UOB_RED (redundant AUX switch in unit output breaker)	Connect to redundant AUX switch in unit output breaker UOB.
J6602	SIB (system isolation breaker)	Connect to normally open (NO) AUX switch in system isolation breaker SIB for parallel system. SIB must contain an AUX switch for each connected UPS.
	BB2 (battery breaker 2)	Connect to normally open (NO) AUX switch in battery breaker number 2[10]
	BB1 (battery breaker 1)	Connect to normally open (NO) AUX switch in battery breaker number 1[10]
J6603	BB1_TRIP (battery breaker 1)	Connect to shunt trip in battery breaker number 1[10]
J6604	BB2_TRIP (battery breaker 2)	Connect to shunt trip in battery breaker number 2[10]
J6609	UOB (unit output breaker)	Connect to normally open (NO) AUX switch in unit output breaker UOB.
	SSIB (static switch input breaker)	Connect to normally open (NO) AUX switch in static switch input breaker SSIB. SSIB must contain an AUX switch for each connected UPS.
J6614	UIB (unit input breaker)	Connect to normally open (NO) AUX switch in unit input breaker UIB. UIB must contain an AUX switch for each connected UPS.
	MBB (maintenance bypass breaker)	Connect to normally closed (NC) AUX switch in maintenance bypass breaker MBB. MBB must contain an AUX switch for each connected UPS.

10. The UPS can connect to and monitor up to two battery breakers.

Connect the IMB Signal Cables in a Simplified 1+1 Parallel System

NOTE: Route the signal cables separately from the power cables to ensure sufficient isolation.

1. Remove the static switch module from both UPSs.

Front View of the UPS

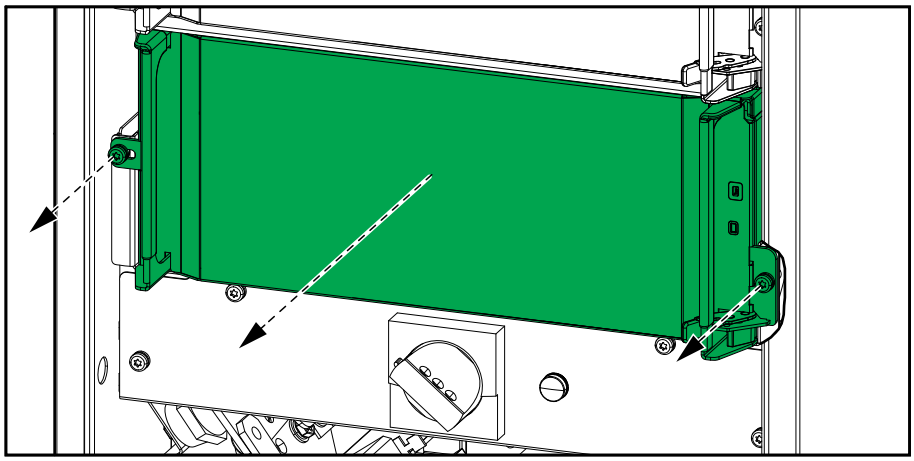

2. Remove the cover from both UPSs.

Front View of the UPS

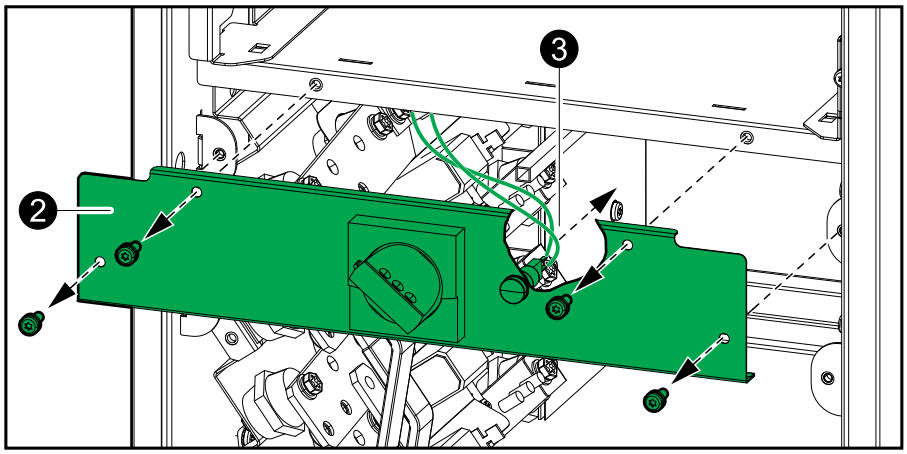

3. Disconnect the signal cables from the internal maintenance breaker IMB indicator light on both UPSs.

4. Remove the shelf from both UPSs.

Front View of the UPS

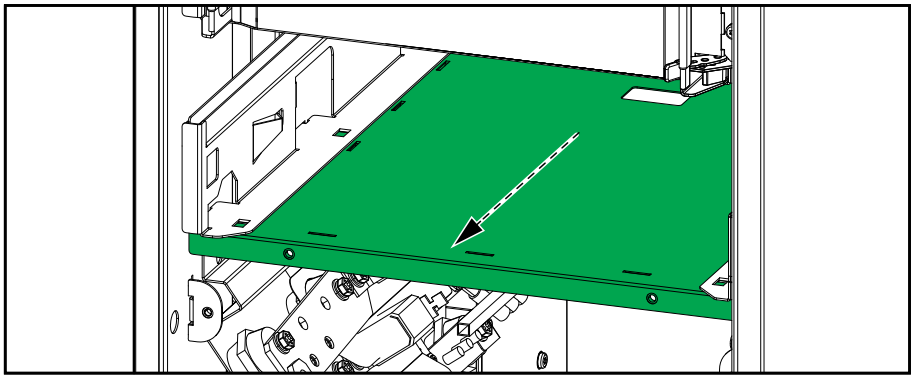

5. Remove the front cover from the internal maintenance breaker IMB on both UPSs.

Front View of the UPS

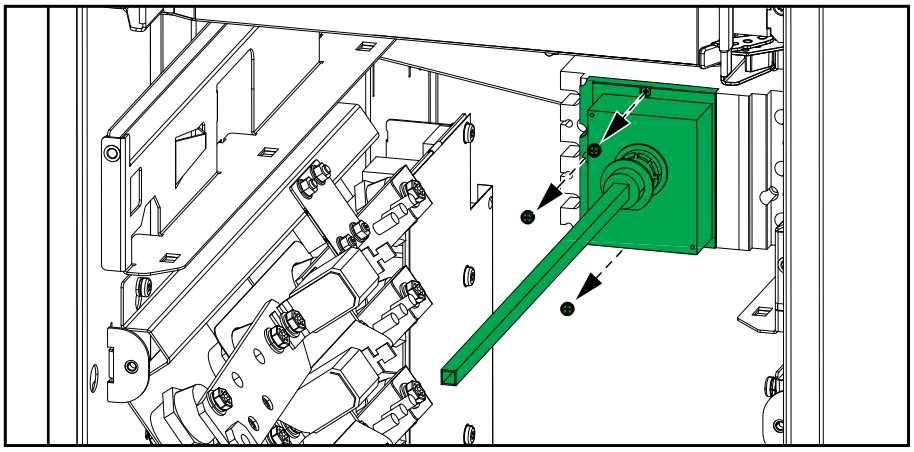

6. Install an additional AUX switch (provided) in the OF2 position in the internal maintenance breaker IMB on both UPSs.

7. Connect the non-Class 2/non-SELV signal cables between the two UPSs:
   a. Connect the non-Class 2/non-SELV signal cables (not provided) from the AUX switch terminal 1 and 2 in the internal maintenance breaker IMB in UPS 1 to J6614-5 and J6614-6 on board 640-4843 in UPS 2 as shown.
   b. Connect the non-Class 2/non-SELV signal cables (not provided) from the AUX switch terminal 1 and 2 in the internal maintenance breaker IMB in UPS 2 to J6614-5 and J6614-6 on board 640-4843 in UPS 1 as shown.

Front View of Internal Maintenance Breaker IMB

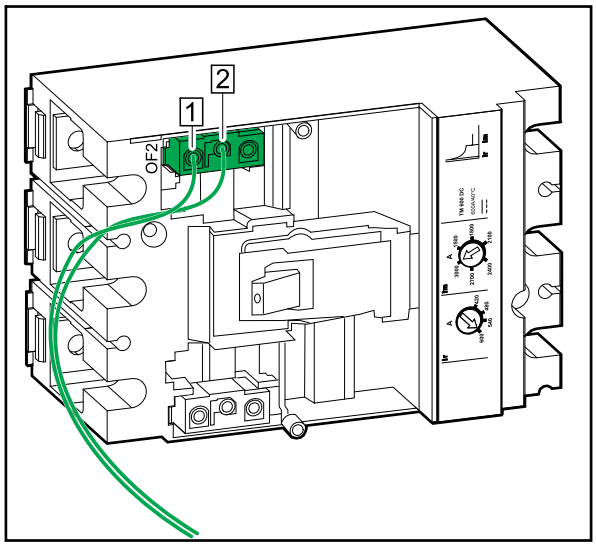

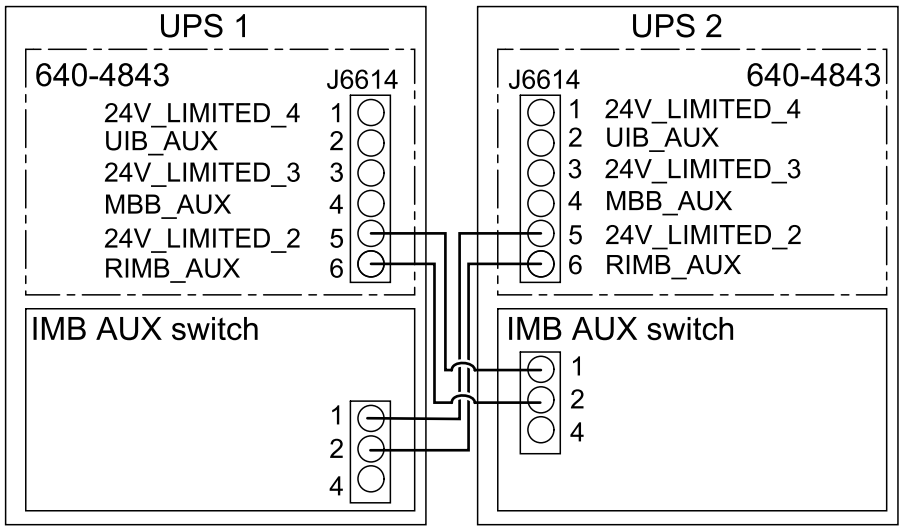

Front View of Simplified 1+1 Parallel System

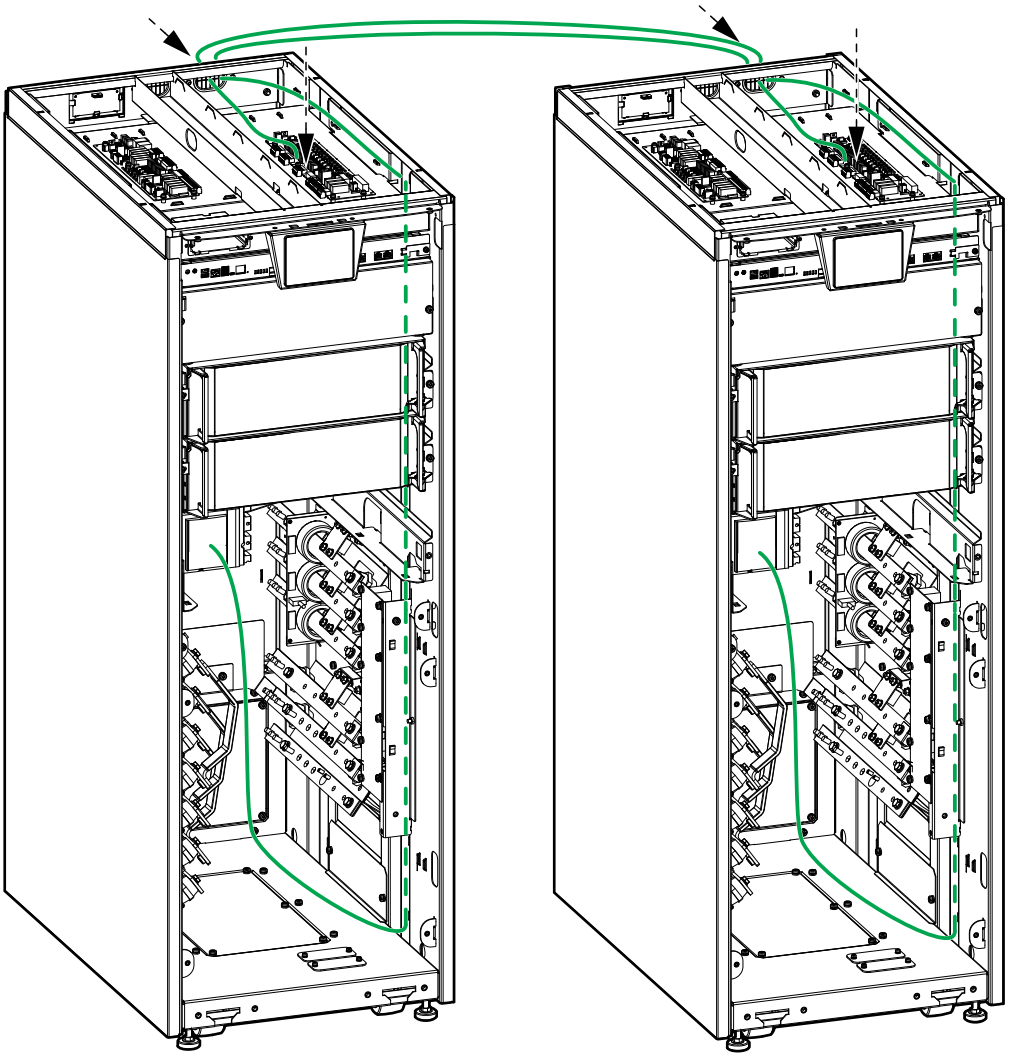

8. Reinstall the front cover on the internal maintenance breaker IMB on both UPSs.
9. Reinstall the shelf on both UPSs.
10. Reconnect the signal cables from the internal maintenance breaker IMB to the indicator light on both UPSs.

Front View of the UPS

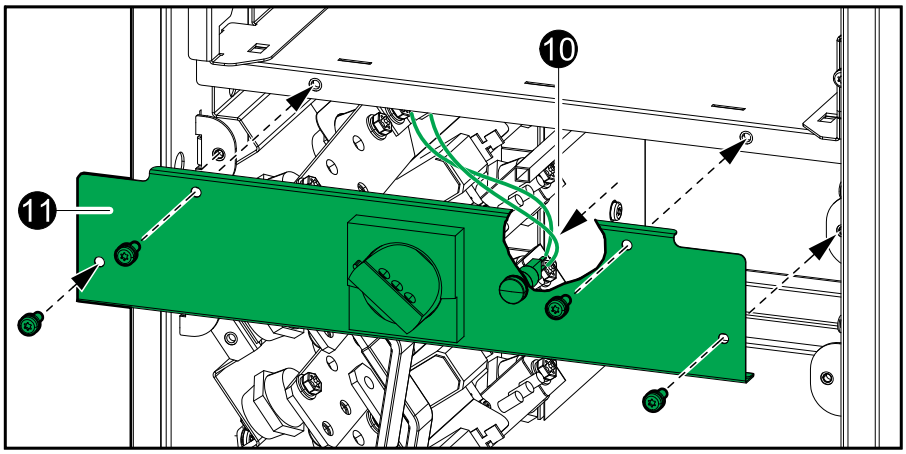

11. Reinstall the cover on both UPSs.
12. Reinstall the static switch module on both UPSs.

Connect the PBUS Cables

1. Connect the provided PBUS 1 (white) and PBUS 2 (red) cables to the PBUS ports in the UPS controller boxes. Route the PBUS cables through the cable channel in the UPSs.

   Front View of Controller Box

   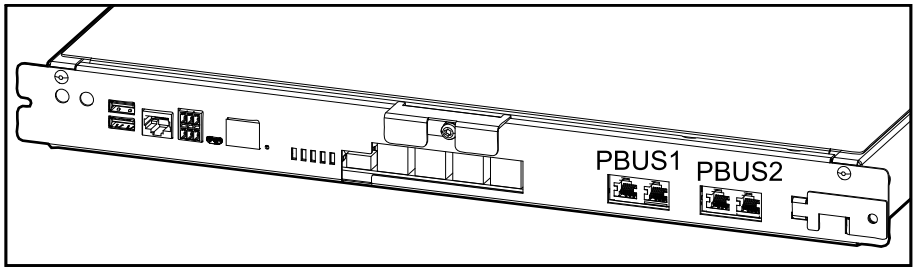

2. Mount termination plugs (T) in the unused connectors.

   Example of System with Three UPSs in Parallel

   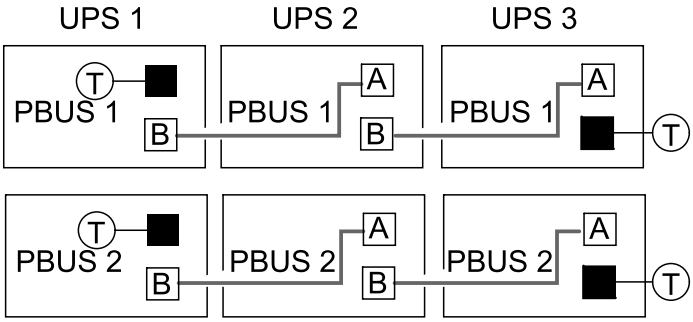

Connect the External Communication Cables

1. Connect the external communication cables to the ports in the UPS controller box.

Front View of the Controller Box

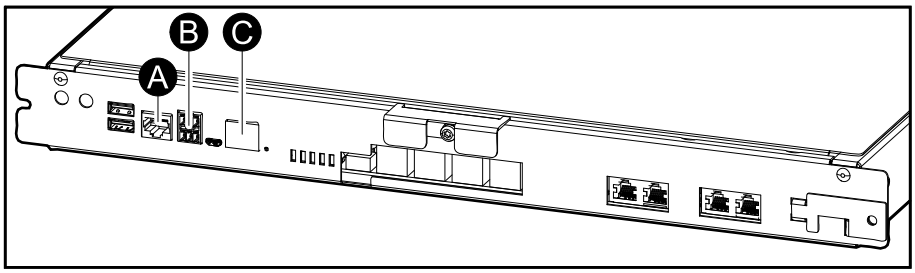

A. Universal I/O port for built-in network management card.

B. Modbus port for built-in network management card. See *Connect the Modbus Cables, page 49*.

C. Network port for built-in network management card. Use a shielded network cable.

NOTE: Check that you are connecting to the correct port to avoid network communication conflicts.

Connect the Modbus Cables

1. Connect the Modbus cables to the UPS(s). Use either 2–wire or 4–wire connection. Shield the cables as shown.
   - Shielded twisted pair cables must be used for Modbus connections. The shield connection to the ground must be as short as possible (ideally below 1 cm). The shield must be connected to each device.
   - Wiring should be done in accordance with local wiring codes.
   - Route signal cables separately from power cables to ensure sufficient isolation.
   - The Modbus port is optically isolated. The ground of the Modbus port is not connected to any other ground.

Example: 2–Wire Connection with Two UPSs

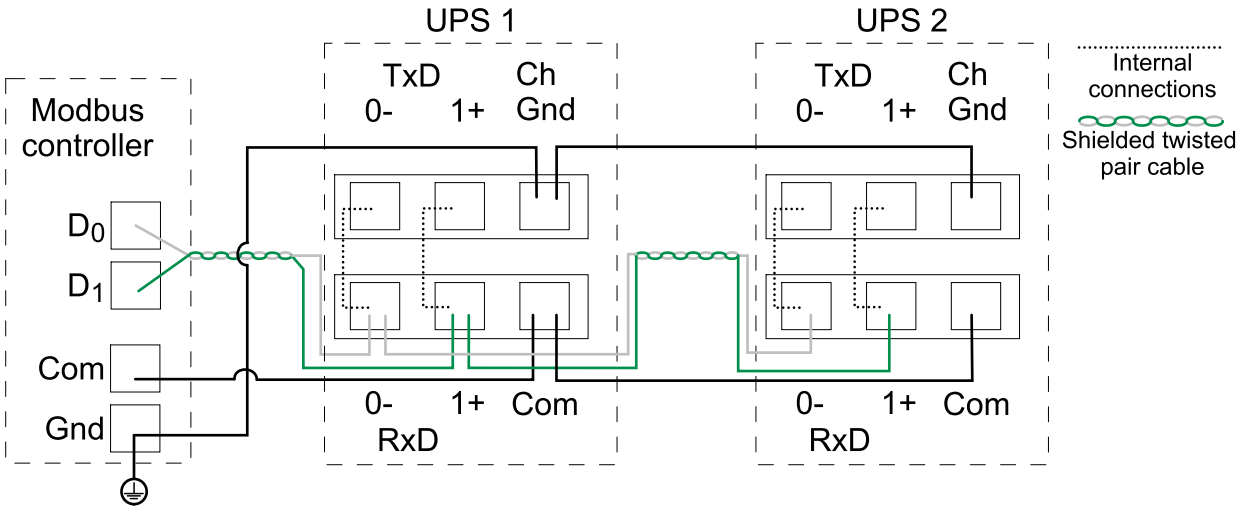

Example: 4–Wire Connection with Two UPSs

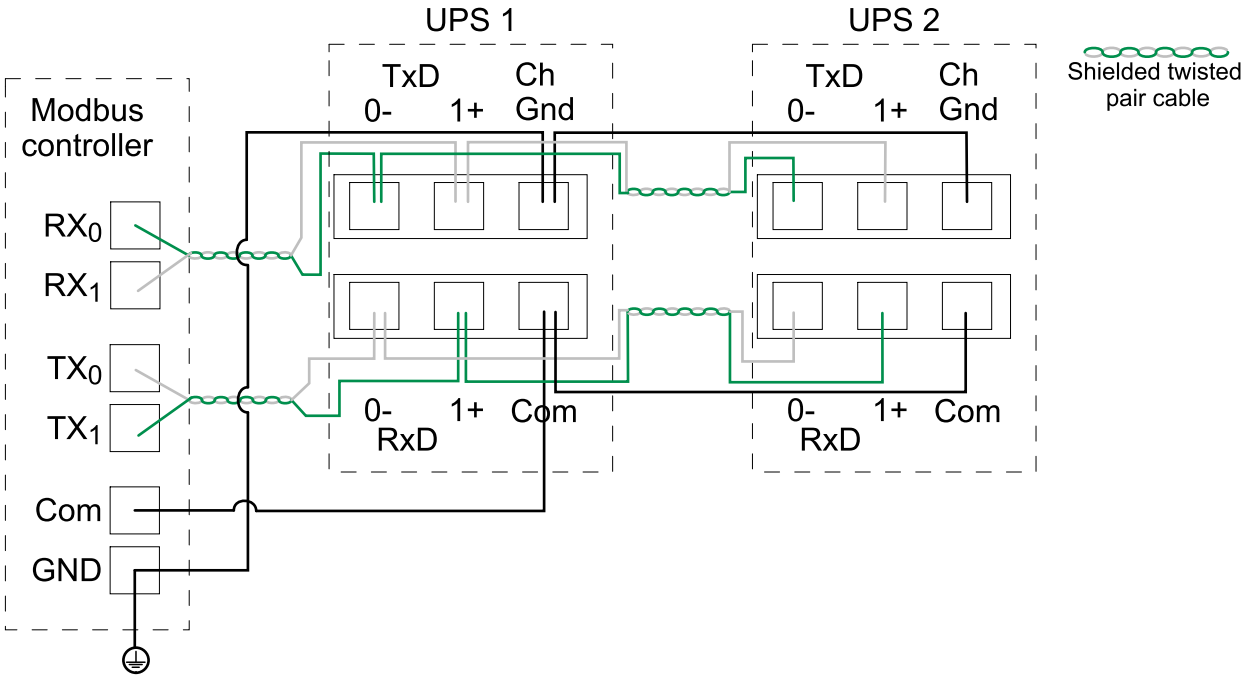

2. Install 150 Ohm termination resistors at each end of each bus if the buses are very long and operate at high data rates. Busses under 610 meters (2000 feet) at 9600 baud or under 305 meters (1000 feet) at 19.200 baud should not require termination resistors.

3. Install 400–650 Ohm bias resistors at or inside the system controller; one from D0 to ground and one from D1 to +5 VDC.

Add Translated Safety Labels to Your Product

The safety labels on your product are in English and French. Sheets with translated safety labels are provided with your product.

1. Find the sheets with translated safety labels provided with your product.
2. Check which 885-XXX numbers are on the sheet with translated safety labels.
3. Locate the safety labels on your product that match the translated safety labels on the sheet – look for the 885-XXX numbers.
4. Add the replacement safety label in your preferred language to your product on top of the existing French safety label.

Final Installation

1. Reinstall the top cover:
   a. Tilt the top cover and slide it onto the UPS from the rear. Tabs in the rear of the top cover must connect to the slots in the rear of the UPS.
   b. Push the top cover down in the front.

Rear View of the UPS

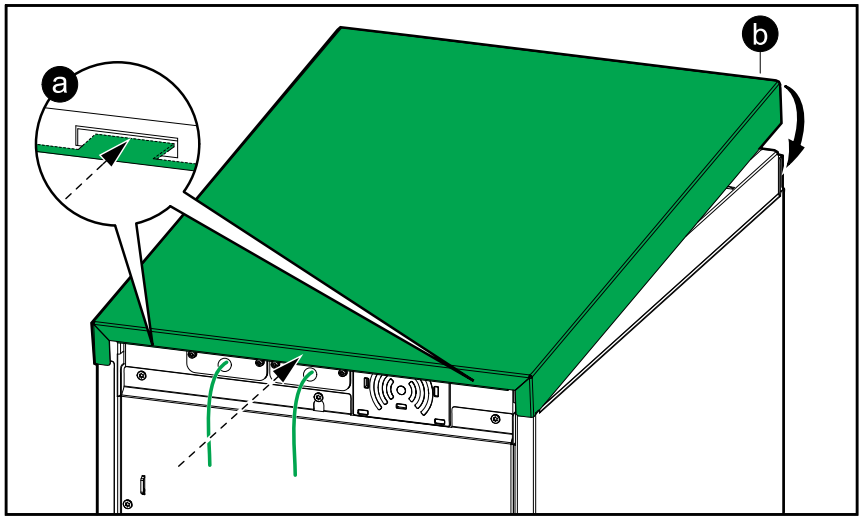

   c. Reinstall the screws.

Front View of the UPS

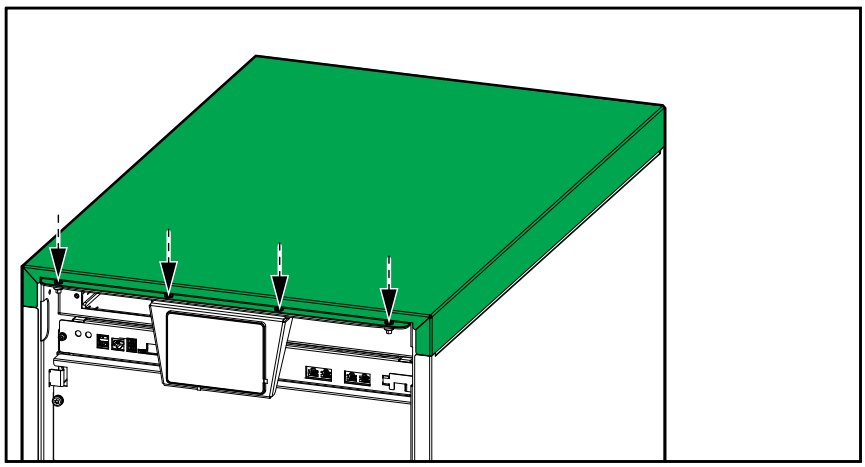

2. Check the fastening of the cable lugs.

⚠ CAUTION

RISK OF EQUIPMENT DAMAGE

Check the fastening of the cable lugs. If the cable lugs move due to pulling on cables, the bolt can become loose.

Failure to follow these instructions can result in injury or equipment damage.

3. Reinstall the transparent cover.

Front View of the UPS

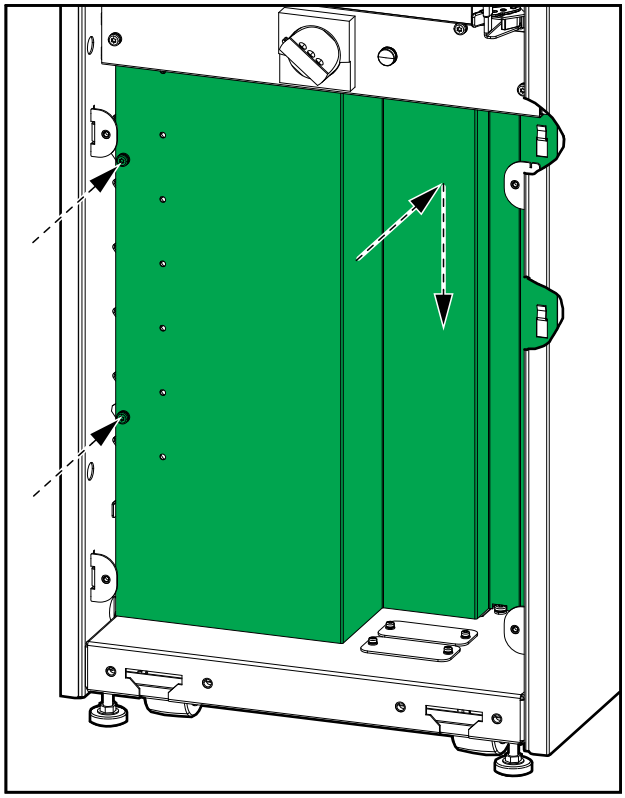

4. Reinstall the lower front plate.

Front View of the UPS

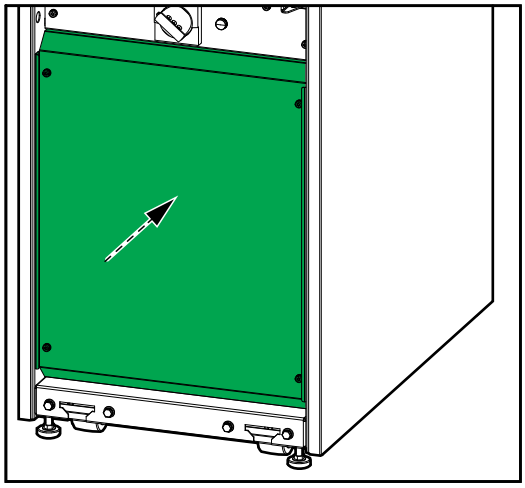

5. **Only for seismic anchoring**:
   a. Install the seismic front anchoring bracket on the UPS with the provided M8 bolts.
   b. Mount the seismic front anchoring bracket on the UPS to the floor. Use appropriate hardware for the floor type – the hole diameter in the front anchoring bracket is ø18 mm.

Front View of the UPS

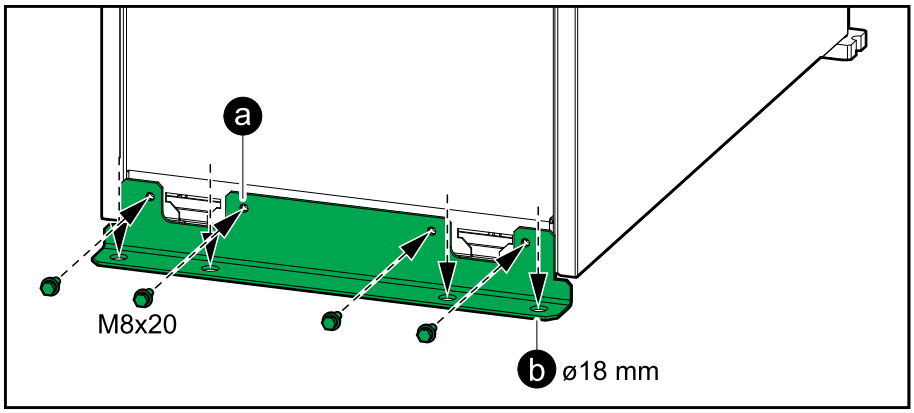

6. Lower the front and rear leveling feet on the UPS with a wrench until they connect with the floor. Use a bubble-leveler to check that the UPS is level. This step is not necessary for a UPS with seismic anchoring.

Front View of the UPS

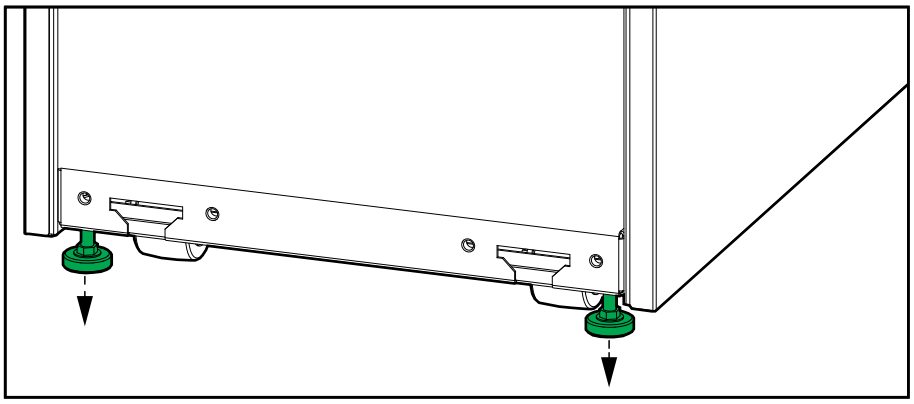

⚠ CAUTION

TIP HAZARD

Do not move the cabinet after the leveling feet have been lowered.

Failure to follow these instructions can result in injury or equipment damage.

7. Reinstall the front panel on the UPS:
   a. Insert the two tabs in the bottom of the front panel in the UPS at a tilted angle.
   b. Reconnect the front panel strap to the UPS.
   c. Close the front panel and lock with the two locking knobs.

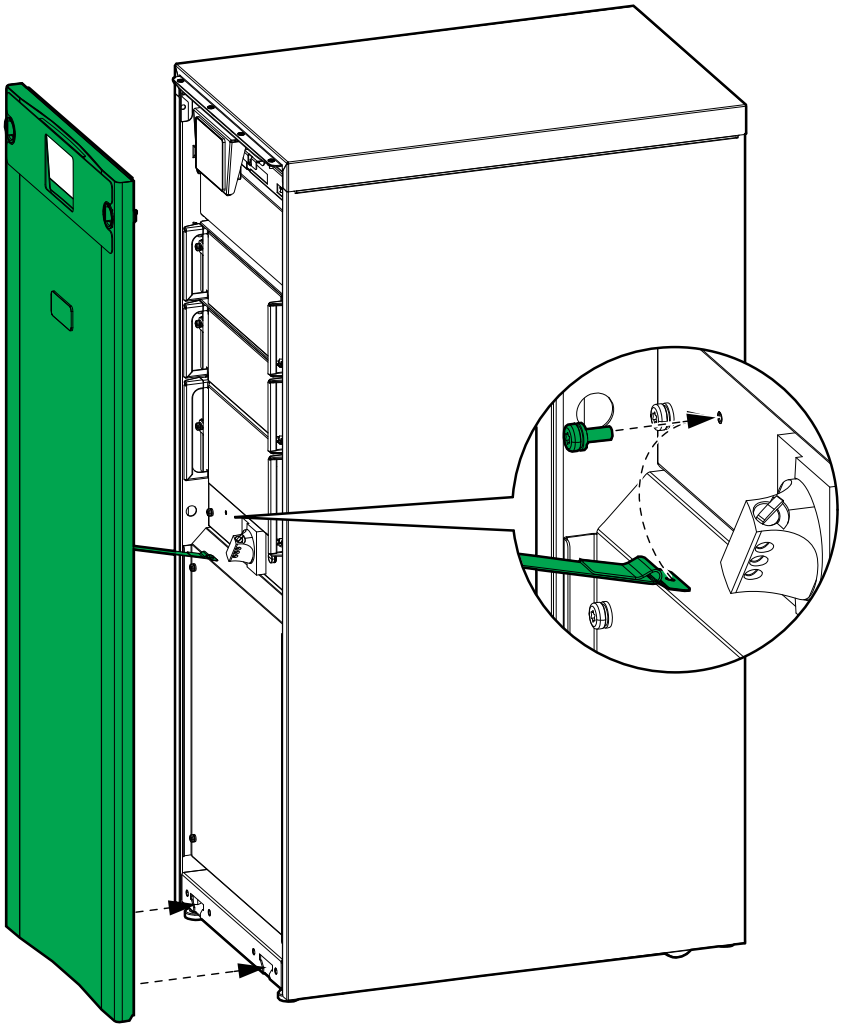

Schneider Electric
35 rue Joseph Monier
92500 Rueil Malmaison
France

+ 33 (0) 1 41 29 70 00

990-6196-001

As standards, specifications, and design change from time to time, please ask for confirmation of the information given in this publication.

© 2019 – 2019 Schneider Electric. All rights reserved.

990-6196-001