Galaxy VS

UPS with Up to 2 Internal Battery Strings

Installation

10 kW 208 V
10-20 kW 400 V
20 kW 480 V

Latest updates are available on the Schneider Electric website
4/2024

www.se.com

Legal Information

The information provided in this document contains general descriptions, technical characteristics and/or recommendations related to products/solutions.

This document is not intended as a substitute for a detailed study or operational and site-specific development or schematic plan. It is not to be used for determining suitability or reliability of the products/solutions for specific user applications. It is the duty of any such user to perform or have any professional expert of its choice (integrator, specifier or the like) perform the appropriate and comprehensive risk analysis, evaluation and testing of the products/solutions with respect to the relevant specific application or use thereof.

The Schneider Electric brand and any trademarks of Schneider Electric SE and its subsidiaries referred to in this document are the property of Schneider Electric SE or its subsidiaries. All other brands may be trademarks of their respective owner.

This document and its content are protected under applicable copyright laws and provided for informative use only. No part of this document may be reproduced or transmitted in any form or by any means (electronic, mechanical, photocopying, recording, or otherwise), for any purpose, without the prior written permission of Schneider Electric.

Schneider Electric does not grant any right or license for commercial use of the document or its content, except for a non-exclusive and personal license to consult it on an "as is" basis.

Schneider Electric reserves the right to make changes or updates with respect to or in the content of this document or the format thereof, at any time without notice.

To the extent permitted by applicable law, no responsibility or liability is assumed by Schneider Electric and its subsidiaries for any errors or omissions in the informational content of this document, as well as any non-intended use or misuse of the content thereof.

Access to Your Product Manuals Online

Find the UPS Manuals, Submittal Drawings, and Other Documentation for Your Specific UPS Here:

In your web browser, type in https://www.go2se.com/ref= and the commercial reference for your product.

Example: *https://www.go2se.com/ref=**GVSUPS20KHS***

Example: *https://www.go2se.com/ref=**GVSUPS20KGS***

Find the UPS Manuals, Relevant Auxiliary Product Manuals, and Option Manuals Here:

Scan the code to go to the Galaxy VS online manual portal:

IEC (380/400/415/440 V)

https://www.productinfo.schneider-electric.com/galaxyvs_iec/

UL (200/208/220/480 V)

https://www.productinfo.schneider-electric.com/galaxyvs_ul/

Here you can find your UPS installation manual, UPS operation manual, and UPS technical specifications, and you can also find installation manuals for your auxiliary products and options.

This online manual portal is available on all devices and offers digital pages, search functionality across the different documents in the portal, and PDF download for offline use.

Learn More About the Galaxy VS Here:

Go to *https://www.se.com/ww/en/product-range/65772* to learn more about this product.

Table of Contents

Important Safety Instructions — SAVE THESE INSTRUCTIONS 7
- FCC Statement 8
- Electromagnetic Compatibility 8
- Safety Precautions 8
- Electrical Safety 11
- Battery Safety 12
- ENERGY STAR Qualification 13
- Symbols Used 14

Specifications 16
- Input Specifications 16
- Bypass Specifications 17
- Output Specifications 18
- Battery Specifications 19
- IEC-Specific Specifications 20
  - Surge Protection Device (SPD) 20
  - Recommended Cable Sizes for 380/400/415 V 21
  - Recommended Upstream Protection for 400 V 22
  - Recommended Bolt and Lug Sizes for IEC 23
  - Leakage Current 23
- UL-Specific Specifications 24
  - Recommended Cable Sizes for 200/208/220/480 V 24
  - Recommended Upstream Protection for 200/208/220/480 V 25
  - Recommended Bolt and Lug Sizes for UL 26
- Inverter Short Circuit Capabilities (Bypass not Available) 27
- Torque Specifications 30
- Environment 30
- Compliance 31
- UPS Weights and Dimensions 32
- Clearance 32

Single System Overview 33

Parallel System Overview 34

Overview of Installation Kits 36

Installation Procedure 37

Install the Seismic Anchoring (Option) 38

Prepare for Installation 39

Connect the Power Cables 43

Connect the Signal Cables 45

Connect the Signal Cables from Switchgear and Third-Party Auxiliary Products 47

Connect the PBUS Cables 49

Connect the External Communication Cables 50
- Connect the Modbus Cables 50

Add Translated Safety Labels to Your Product 52

Final Installation 53

Decommission or Move the UPS to a New Location 58

Important Safety Instructions — SAVE THESE INSTRUCTIONS

Read these instructions carefully and look at the equipment to become familiar with it before trying to install, operate, service or maintain it. The following safety messages may appear throughout this manual or on the equipment to warn of potential hazards or to call attention to information that clarifies or simplifies a procedure.

The addition of this symbol to a “Danger” or “Warning” safety message indicates that an electrical hazard exists which will result in personal injury if the instructions are not followed.

This is the safety alert symbol. It is used to alert you to potential personal injury hazards. Obey all safety messages with this symbol to avoid possible injury or death.

⚠ DANGER

DANGER indicates a hazardous situation which, if not avoided, **will result in** death or serious injury.

Failure to follow these instructions will result in death or serious injury.

⚠ WARNING

WARNING indicates a hazardous situation which, if not avoided, **could result in** death or serious injury.

Failure to follow these instructions can result in death, serious injury, or equipment damage.

⚠ CAUTION

CAUTION indicates a hazardous situation which, if not avoided, **could result in** minor or moderate injury.

Failure to follow these instructions can result in injury or equipment damage.

NOTICE

NOTICE is used to address practices not related to physical injury. The safety alert symbol shall not be used with this type of safety message.

Failure to follow these instructions can result in equipment damage.

Please Note

Electrical equipment should only be installed, operated, serviced, and maintained by qualified personnel. No responsibility is assumed by Schneider Electric for any consequences arising out of the use of this material.

A qualified person is one who has skills and knowledge related to the construction, installation, and operation of electrical equipment and has received safety training to recognize and avoid the hazards involved.

Per IEC 62040-1: "Uninterruptible power systems (UPS) -- Part 1: Safety Requirements," this equipment, including battery access, must be inspected, installed and maintained by a skilled person.

The skilled person is a person with relevant education and experience to enable him or her to perceive risks and to avoid hazards which the equipment can create (reference IEC 62040-1, section 3.102).

FCC Statement

NOTE: This equipment has been tested and found to comply with the limits for a Class A digital device, pursuant to Part 15 of the FCC Rules. These limits are designed to provide reasonable protection against harmful interference when the equipment is operated in a commercial environment. This equipment generates, uses, and can radiate radio frequency energy and, if not installed and used in accordance with the instruction manual, may cause harmful interference to radio communications. Operation of this equipment in a residential area is likely to cause harmful interference in which case the user will be required to correct the interference at his own expense.

Any changes or modifications not expressly approved by the party responsible for compliance could void the user's authority to operate the equipment.

Electromagnetic Compatibility

NOTICE

RISK OF ELECTROMAGNETIC DISTURBANCE

This is a product category C2 UPS product. In a residential environment, this product may cause radio inference, in which case the user may be required to take additional measures.

Failure to follow these instructions can result in equipment damage.

Safety Precautions

DANGER

HAZARD OF ELECTRIC SHOCK, EXPLOSION, OR ARC FLASH

All safety instructions in this document must be read, understood and followed.

Failure to follow these instructions will result in death or serious injury.

DANGER

HAZARD OF ELECTRIC SHOCK, EXPLOSION, OR ARC FLASH

Read all instructions in the installation manual before installing or working on this UPS system.

Failure to follow these instructions will result in death or serious injury.

DANGER

HAZARD OF ELECTRIC SHOCK, EXPLOSION, OR ARC FLASH

Do not install the UPS system until all construction work has been completed and the installation room has been cleaned. If additional construction work is needed in the installation room after the UPS has been installed, turn off the UPS and cover the UPS with the protective packaging bag the UPS was delivered in.

Failure to follow these instructions will result in death or serious injury.

DANGER

HAZARD OF ELECTRIC SHOCK, EXPLOSION, OR ARC FLASH

- The product must be installed according to the specifications and requirements as defined by Schneider Electric. It concerns in particular the external and internal protections (upstream breakers, battery breakers, cabling, etc.) and environmental requirements. No responsibility is assumed by Schneider Electric if these requirements are not respected.
- After the UPS system has been electrically wired, do not start up the system. Start-up must only be performed by Schneider Electric.

Failure to follow these instructions will result in death or serious injury.

DANGER

HAZARD OF ELECTRIC SHOCK, EXPLOSION, OR ARC FLASH

The UPS system must be installed according to local and national regulations. Install the UPS according to:

- IEC 60364 (including 60364-4-41– protection against electric shock, 60364-4-42 – protection against thermal effect, and 60364-4-43 – protection against overcurrent), **or**
- NEC NFPA 70, **or**
- Canadian Electrical Code (C22.1, Part 1)

depending on which one of the standards apply in your local area.

Failure to follow these instructions will result in death or serious injury.

DANGER

HAZARD OF ELECTRIC SHOCK, EXPLOSION, OR ARC FLASH

- Install the UPS system in a temperature controlled indoor environment free of conductive contaminants and humidity.
- Install the UPS system on a non-flammable, level and solid surface (e.g. concrete) that can support the weight of the system.

Failure to follow these instructions will result in death or serious injury.

⚠⚠ DANGER

HAZARD OF ELECTRIC SHOCK, EXPLOSION, OR ARC FLASH

The UPS is not designed for and must therefore not be installed in the following unusual operating environments:

- Damaging fumes
- Explosive mixtures of dust or gases, corrosive gases, or conductive or radiant heat from other sources
- Moisture, abrasive dust, steam or in an excessively damp environment
- Fungus, insects, vermin
- Salt-laden air or contaminated cooling refrigerant
- Pollution degree higher than 2 according to IEC 60664-1
- Exposure to abnormal vibrations, shocks, and tilting
- Exposure to direct sunlight, heat sources, or strong electromagnetic fields

Failure to follow these instructions will result in death or serious injury.

⚠⚠ DANGER

HAZARD OF ELECTRIC SHOCK, EXPLOSION, OR ARC FLASH

Do not drill or cut holes for cables or conduits with the gland plates installed and do not drill or cut holes in close proximity to the UPS.

Failure to follow these instructions will result in death or serious injury.

⚠⚠ WARNING

HAZARD OF ARC FLASH

Do not make mechanical changes to the product (including removal of cabinet parts or drilling/cutting of holes) that are not described in the installation manual.

Failure to follow these instructions can result in death, serious injury, or equipment damage.

NOTICE

RISK OF OVERHEATING

Respect the space requirements around the UPS system and do not cover the UPS ventilation openings when the UPS system is in operation.

Failure to follow these instructions can result in equipment damage.

NOTICE

RISK OF EQUIPMENT DAMAGE

Do not connect the UPS output to regenerative load systems including photovoltaic systems and speed drives.

Failure to follow these instructions can result in equipment damage.

Electrical Safety

⚠⚠DANGER

HAZARD OF ELECTRIC SHOCK, EXPLOSION OR ARC FLASH

- Electrical equipment must be installed, operated, serviced, and maintained only by qualified personnel.
- Apply appropriate personal protective equipment (PPE) and follow safe electrical work practices.
- Turn off all power supplying the UPS system before working on or inside the equipment.
- Before working on the UPS system, check for hazardous voltage between all terminals including the protective earth.
- The UPS contains an internal energy source. Hazardous voltage can be present even when disconnected from the utility/mains supply. Before installing or servicing the UPS system, ensure that the units are OFF and that utility/mains and batteries are disconnected. Wait five minutes before opening the UPS to allow the capacitors to discharge.
- A disconnection device (e.g. disconnection circuit breaker or switch) must be installed to enable isolation of the system from upstream power sources in accordance with local regulations. This disconnection device must be easily accessible and visible.
- The UPS must be properly earthed/grounded and due to a high touch current/leakage current, the earthing/grounding conductor must be connected first.

Failure to follow these instructions will result in death or serious injury.

⚠DANGER

HAZARD OF ELECTRIC SHOCK, EXPLOSION, OR ARC FLASH

In systems where backfeed protection is not part of the standard design, an automatic isolation device (backfeed protection option or other device meeting the requirements of IEC/EN 62040–1 **or** UL1778 5th Edition – depending on which of the two standards apply to your local area) must be installed to prevent hazardous voltage or energy at the input terminals of the isolation device. The device must open within 15 seconds after the upstream power supply fails and must be rated according to the specifications.

Failure to follow these instructions will result in death or serious injury.

When the UPS input is connected through external isolators that, when opened, isolate the neutral or when the automatic backfeed isolation is provided external to the equipment or is connected to an IT power distribution system, a label must be fitted at the UPS input terminals, and on all primary power isolators installed remote from the UPS area and on external access points between such isolators and the UPS, by the user, displaying the following text (or equivalent in a language which is acceptable in the country in which the UPS system is installed):

⚠DANGER

HAZARD OF ELECTRIC SHOCK, EXPLOSION, OR ARC FLASH

Risk of Voltage Backfeed. Before working on this circuit: Isolate the UPS and check for hazardous voltage between all terminals including the protective earth.

Failure to follow these instructions will result in death or serious injury.

⚠ DANGER

HAZARD OF ELECTRIC SHOCK, EXPLOSION, OR ARC FLASH

- Always perform correct Lockout/Tagout before working on the UPS.
- A UPS with autostart enabled will automatically restart when the mains supply returns.
- If autostart is enabled on the UPS, a label must be added on the UPS to warn about this functionality.

Failure to follow these instructions will result in death or serious injury.

Add the label below on the UPS if autostart has been enabled:

⚠ DANGER

HAZARD OF ELECTRIC SHOCK, EXPLOSION, OR ARC FLASH

Autostart is enabled. The UPS will automatically restart when the mains supply returns.

Failure to follow these instructions will result in death or serious injury.

⚠ DANGER

HAZARD OF ELECTRIC SHOCK, EXPLOSION, OR ARC FLASH

This product can cause a DC current in the PE conductor. If a residual current-operated protective device (RCD) is used for protection against electrical shock, only an RCD of Type B is allowed on the supply side of this product.

Failure to follow these instructions will result in death or serious injury.

Battery Safety

⚠ DANGER

HAZARD OF ELECTRIC SHOCK, EXPLOSION, OR ARC FLASH

- Battery circuit breakers must be installed according to the specifications and requirements as defined by Schneider Electric.
- Servicing of batteries must only be performed or supervised by qualified personnel knowledgeable of batteries and the required precautions. Keep unqualified personnel away from batteries.
- Disconnect charging source prior to connecting or disconnecting battery terminals.
- Do not dispose of batteries in a fire as they can explode.
- Do not open, alter, or mutilate batteries. Released electrolyte is harmful to the skin and eyes. It may be toxic.

Failure to follow these instructions will result in death or serious injury.

DANGER

HAZARD OF ELECTRIC SHOCK, EXPLOSION, OR ARC FLASH

Batteries can present a risk of electric shock and high short-circuit current. The following precautions must be observed when working on batteries

- Remove watches, rings, or other metal objects.
- Use tools with insulated handles.
- Wear protective glasses, gloves and boots.
- Do not lay tools or metal parts on top of batteries.
- Disconnect the charging source prior to connecting or disconnecting battery terminals.
- Determine if the battery is inadvertently grounded. If inadvertently grounded, remove source from ground. Contact with any part of a grounded battery can result in electric shock. The likelihood of such shock can be reduced if such grounds are removed during installation and maintenance (applicable to equipment and remote battery supplies not having a grounded supply circuit).

Failure to follow these instructions will result in death or serious injury.

DANGER

HAZARD OF ELECTRIC SHOCK, EXPLOSION, OR ARC FLASH

When replacing batteries, always replace with the same type and number of batteries or battery packs.

Failure to follow these instructions will result in death or serious injury.

CAUTION

RISK OF EQUIPMENT DAMAGE

- Mount the batteries in the UPS system, but do not connect the batteries until the UPS system is ready to be powered up. The time duration from battery connection until the UPS system is powered up must not exceed 72 hours or 3 days.
- Batteries must not be stored more than six months due to the requirement of recharging. If the UPS system remains de-energized for a long period, we recommend that you energize the UPS system for a period of 24 hours at least once every month. This charges the batteries, thus avoiding irreversible damage.

Failure to follow these instructions can result in injury or equipment damage.

ENERGY STAR Qualification

Select models are ENERGY STAR® qualified.
For more information on your specific model go to www.se.com.

Symbols Used

	Earthing/ground symbol.
	Protective earth (PE)/equipment grounding conductor (EGC) symbol.
	Direct current (DC) symbol.
	Alternating current (AC) symbol.
	Positive polarity symbol. It is used to identify the positive terminal(s) of equipment which is used with, or generates direct current.
	Negative polarity symbol. It is used to identify the negative terminal(s) of equipment which is used with, or generates direct current.
	Battery symbol.
	Static switch symbol. It is used to indicate switches that are designed to connect or disconnect the load to or from the supply respectively without the existence of moving parts.
	AC/DC converter (rectifier) symbol. It is used to identify an AC/DC converter (rectifier) and, in case of plug-in devices, to identify the relevant receptacles.
	DC/AC converter (inverter) symbol. It is used to identify an DC/AC converter (inverter) and, in case of plug-in devices, to identify the relevant receptacles.

	Fuse symbol. It is used to identify fuse boxes or their locations.
	Transformer symbol.
	Input symbol. It is used to identify an input terminal when it is necessary to distinguish between inputs and outputs.
	Output symbol. It is used to identify an output terminal when it is necessary to distinguish between inputs and outputs.
	Switch disconnector symbol. It is used to identify the disconnecting device in the form of switch that protects the equipment from short circuit or heavy load current. It opens the circuits once the current flow crosses its maximum limit.
	Circuit breaker symbol. It is used to identify the disconnecting device in the form of circuit breaker that protects the equipment from short circuit or heavy load current. It opens the circuits once the current flow crosses its maximum limit.
	Disconnection device symbol. It is used to identify the disconnecting device in the form of circuit breaker or switch that protects the equipment from short circuit or heavy load current. It opens the circuits once the current flow crosses its maximum limit.
N	Neutral symbol. It is used to identify the neutral conductors or their locations.
L	Phase conductor symbol. It is used to identify the phase conductors or their locations.

Specifications

Input Specifications

UPS rating	10 kW		15 kW	20 kW	
Voltage (V)	**200/208/220**	**380/400/415**	**380/400/415**	**380/400/415**	**480**
Connections	4-wire (L1, L2, L3, N, G) WYE (single mains) 3-wire (L1, L2, L3, G) WYE (dual mains)	4-wire (L1, L2, L3, N, PE) WYE (single mains) 3-wire (L1, L2, L3, PE) WYE (dual mains)[1 2]			3-wire (L1, L2, L3, G) WYE or 4-wire (L1, L2, L3, N, G) WYE (single mains) 3-wire (L1, L2, L3, G) WYE (dual mains)[1]
Input voltage range (V)	200 V: 170-230 208 V: 177-239 220 V: 187-253	380 V: 331-437 400 V: 340-460 415 V: 353-477			408-552
Frequency range (Hz)	40-70				
Nominal input current (A)	31/30/28	16/15/14	24/22/22	32/30/29	25
Maximum input current (A)	38/37/35	20/19/19	29/28/27	39/37/36	33
Input current limitation (A)	40/38/36	21/20/19	30/29/28	39/37/36	31
Input power factor	0.99 for load greater than 50% 0.95 for load greater than 25%				
Total harmonic distortion (THDI)	<3% at full linear load (symmetrical)				
Minimum short circuit rating	–	Dependent on upstream protection. See section for **Recommended Upstream Protection for 400 V** for details.			–
Maximum short circuit rating	65 kA RMS				
Protection	Built-in backfeed protection and fuses				
Ramp-in	Programmable and adaptive 1-40 seconds				

1. TN and TT power distribution systems are supported. Corner (line) grounding is not permitted.
2. **Only for dual mains system with upstream 4-pole breakers**: Install an N connection with the input cables (L1, L2, L3, N, PE). Refer to earthing schematics for TN-S dual mains 4-pole circuit breaker.

Bypass Specifications

UPS rating	**10 kW**		**15 kW**	**20 kW**	
Voltage (V)	**200/208/220**	**380/400/415**	**380/400/415**	**380/400/415**	**480**
Connections	4-wire (L1, L2, L3, N, G) WYE	4-wire (L1, L2, L3, N, PE) WYE			3-wire (L1, L2, L3, G) WYE or 4-wire (L1, L2, L3, N, G) WYE[3]
Bypass voltage range (V)	200 V: 180-220 208 V: 187-229 220 V: 198-242	380 V: 342-418 400 V: 360-440 415 V: 374-457			432-528
Frequency range (Hz)	50/60 ± 1, 50/60 ± 3, 50/60 ± 10 (user selectable)				
Nominal bypass current (A)	31/29/28	16/16/16	24/23/23	33/29/28	26
Nominal neutral current (A)	50/48/45	26/25/24	39/37/36	53/50/48	42
Minimum short circuit rating	–	Dependent on upstream protection. See section for **Recommended Upstream Protection for 400 V** for details.			–
Maximum short circuit rating[4]	65 kA RMS				
Protection	Built-in backfeed protection and fuses Internal fuse specifications: Rated 160 A, prearcing 2.68 kA^2s				

3. TN and TT power distribution systems are supported. Corner (line) grounding is not permitted.
4. Conditioned by the internal fuse rated 160 A, prearcing 2.68 kA^2s.

Output Specifications

NOTE: The number of output connections must match the number of input wires in a single mains system or bypass wires in a dual mains system.

UPS rating	**10 kW**		**15 kW**	**20 kW**	
Voltage (V)	**200/208/220**	**380/400/415**	**380/400/415**	**380/400/415**	**480**
Connections	4-wire (L1, L2, L3, N, G)	4-wire (L1, L2, L3, N, PE)			3-wire (L1, L2, L3, G, GEC[5]) or 4-wire (L1, L2, L3, N, G)
Output voltage regulation	Symmetrical load ± 1% Asymmetrical load ± 3%				
Overload capacity	150% for 1 minute (in normal operation) 125% for 10 minutes (in normal operation) 125% for 1 minute (in battery operation) For 200/208/220/480 V: 125% continuous (bypass operation) For 380/400/415 V: 110% continuous (bypass operation) 1000% for 100 milliseconds (bypass operation)				
Dynamic load response	± 5% after 2 milliseconds ± 1% after 50 milliseconds				
Output power factor	1				
Nominal output current (A)	29/28/26	15/14/14	23/22/21	30/29/28	24
Minimum short circuit rating[6]	–	Dependent on upstream protection. See section for **Recommended Upstream Protection for 400 V** for details.			–
Maximum short circuit rating[7]	65 kA RMS				
Inverter output short circuit capabilities	Varies with time. See graph and table values in Inverter Short Circuit Capabilities (Bypass not Available), page 27.				
Frequency regulation (Hz)	50/60 Hz bypass synchronized – 50/60 Hz ± 0.1% free-running				
Synchronized slew rate (Hz/sec)	Programmable to 0.25, 0.5, 1, 2, 4, 6				
Total harmonic distortion (THDU)	<2% for linear load <5% for non-linear load	<1% for linear load <3% for non-linear load			
Output performance classification (according to IEC 62040-3:2021)	NA	VFI-SS-11			NA
Load crest factor	2.5				
Load power factor	From 0.7 leading to 0.7 lagging without any derating				

5. Per NEC 250.30.
6. Minimum short circuit rating for output takes backfeeding energy through the bypass of parallel UPSs into consideration.
7. Maximum short circuit rating for output takes backfeeding energy through the bypass of parallel UPSs into consideration.

Battery Specifications

All values are based on 40 battery blocks.

UPS rating	**10 kW**		**15 kW**	**20 kW**	
Voltage (V)	**200/208/220**	**380/400/415**	**380/400/415**	**380/400/415**	**480**
Charging power in % of output power at 0-40% load	80%				
Charging power in % of output power at 100% load	20%				
Maximum charging power (at 0-40% load) (kW)	8	8	12	16	16
Maximum charging power (at 100% load) (kW)	2	2	3	4	4
Nominal battery voltage (VDC)	480				
Nominal float voltage (VDC)	545				
Maximum boost voltage (VDC)	571				
Temperature compensation (per cell)	-3.3mV/°C, for T ≥ 25 °C – 0mV/°C, for T < 25 °C				
End of discharge voltage (full load) (VDC)	384				
Battery current at full load and nominal battery voltage (A)	23	23	34	47	45
Battery current at full load and minimum battery voltage (A)	27	27	41	54	54
Ripple current	< 5% C20 (5 minute runtime)				
Battery test	Manual/automatic (selectable)				
Maximum short circuit rating	10 kA				

IEC-Specific Specifications

Surge Protection Device (SPD)

⚠⚠DANGER

HAZARD OF ELECTRIC SHOCK, EXPLOSION, OR ARC FLASH

This UPS is OVCII (Over Voltage Category Class II) compliant. This UPS must only be installed in an OVCII compliant environment.

- If the UPS is installed in an environment with an OVC rating higher than II, an SPD (surge protection device) must be installed upstream of the UPS to reduce the overvoltage category to OVCII.
- The SPD must include a status indicator to show the user if the SPD is operational or is no longer functioning according to design. The status indicator may be visual and/or audible and/or may have remote signalling and/or output contact capability in accordance with IEC 62040-1.

Failure to follow these instructions will result in death or serious injury.

Surge Protection Device Requirements

Select a surge protection device that complies with the following requirements:

Class	Type 2
Rated voltage (Ur)	230/400 V, 277/480 V
Voltage protection level (Up)	< 2.5 kV
Short circuit rating (Isccr)[8]	According to installation prospective short circuit level
Earthing system[9]	TN-S, TT, IT, TN-C
Poles	3P/4P depending on earthing configuration
Standards	IEC 61643-11 / UL 1449
Monitoring	Yes

8. Lower short circuit rating can be achieved with fuse protection.
9. Corner grounding not permitted.

Recommended Cable Sizes for 380/400/415 V

DANGER

HAZARD OF ELECTRIC SHOCK, EXPLOSION, OR ARC FLASH

All wiring must comply with all applicable national and/or electrical codes. The maximum allowable cable size is 25 mm^2.

Failure to follow these instructions will result in death or serious injury.

NOTE: Overcurrent protection is to be provided by others.

Cable sizes in this manual are based on table B.52.3 and table B.52.5 of IEC 60364-5-52 with the following assertions:

- 90 °C conductors
- An ambient temperature of 30 °C
- Use of copper conductors
- Installation method C

PE cable size is based on table 54.2 of IEC 60364-4-54.

If the ambient temperature is greater than 30 °C, larger conductors are to be selected in accordance with the correction factors of the IEC.

NOTE: Recommended cable sizes and maximum allowable cable size may vary for the auxiliary products. Not all auxiliary products support aluminum cables. Refer to the installation manual provided with the auxiliary product.

NOTE: Neutral conductor is sized to handle 1.73 times phase current in case of high harmonic content from non-linear loads. If non or less harmonic currents are expected, neutral conductor can be sized accordingly but not less than the phase conductor.

Copper

UPS rating	**10 kW**	**15 kW**	**20 kW**
Voltage (V)	**380/400/415**	**380/400/415**	**380/400/415**
Input phases (mm^2)	6	6	10
Input PE (mm^2)	6	6	10
Bypass/output phases (mm^2)	6	6	10
Bypass PE/output PE (mm^2)	6	6	10
Neutral (mm^2)	6	10	16

Recommended Upstream Protection for 400 V

Upstream Protection for IEC and Minimum Prospective Phase-To-Earth Short Circuit at the UPS Input/Bypass Terminals

⚠ DANGER

HAZARD OF ELECTRIC SHOCK, EXPLOSION, OR ARC FLASH

The upstream overcurrent protective device (and its settings) must be sized to ensure a disconnecting time within 0.2 seconds in case of a short circuit between the input/bypass phase and the UPS enclosure.

Failure to follow these instructions will result in death or serious injury.

Compliance is assured with the recommended breaker (and its settings) from the table below.

NOTICE

RISK OF UNINTENTIONAL DEVICE OPERATION

If a residual current-operated protective device (RCD-B) is used upstream as ground fault protection, then the RCD-B shall be sized to not trip on the leakage current of this product, which can be up to 60 mA.

Failure to follow these instructions can result in equipment damage.

Recommended Upstream Protection for 400 V IEC UPS

NOTE: For local directives which require 4-pole circuit breakers: If neutral conductor is expected to carry a high current, due to line-neutral non-linear load, the circuit breaker must be rated according to expected neutral current.

$Ik_{Ph\text{-}PE}$ is the minimum prospective phase-to-earth short circuit current required at the input/bypass terminals of the UPS. The $Ik_{Ph\text{-}PE}$ in the table is based on the recommended protective device.

UPS rating	**10 kW**		**15 kW**		**20 kW**	
	Input	**Bypass**	**Input**	**Bypass**	**Input**	**Bypass**
$Ik_{Ph\text{-}PE}$ (kA)	**0.55**	**0.6**	**0.8**	**0.6**	**0.6**	**0.5**
Breaker type	NSX100H TM25D (C10H3TM025)	NSX100H TM16D (C10H3TM016)	NSX100H TM32D (C10H3TM032)	NSX100H TM25D (C10H3TM025)	NSX100H TM40D (C10H3TM040)	NSX100H TM32D (C10H3TM032)
In (A)	25	16	32	25	40	32
Ir (A)	20	16	32	23	40	32
Im (A)	300 (fixed)	190 (fixed)	400 (fixed)	300 (fixed)	500 (fixed)	400 (fixed)

Recommended Bolt and Lug Sizes for IEC

Cable size mm²	Bolt size	Cable lug type
6	M6x16 mm	TLK6-6
10	M6x16 mm	TLK10-6
16	M6x16 mm	TLK16-6

Leakage Current

380/400/415 V UPS system 4-wire installation at 100% load

UPS rating	Leakage current
10-20 kW	60 mA

UL-Specific Specifications

Recommended Cable Sizes for 200/208/220/480 V

⚠⚠DANGER

HAZARD OF ELECTRIC SHOCK, EXPLOSION, OR ARC FLASH

All wiring must comply with all applicable national and/or electrical codes. The maximum allowable cable size is 4 AWG.

Failure to follow these instructions will result in death or serious injury.

NOTE: Overcurrent protection is to be provided by others.

Cable sizes in this manual are based on Table 310.15 (B)(16) of the National Electrical Code (NEC) with the following assertions:

- 90 °C (194 °F) conductors (75 °C (167 °F) termination)
- An ambient temperature of 30 °C (86 °F)
- Use of copper conductors

If the ambient temperature is greater than 30 °C (86 °F), larger conductors are to be selected in accordance with the correction factors of the NEC.

Equipment grounding conductors (EGC) are sized in accordance with NEC Article 250.122 and Table 250.122.

NOTE: Recommended cable sizes and maximum allowable cable size may vary for the auxiliary products. Not all auxiliary products support aluminum cables. Refer to the installation manual provided with the auxiliary product.

NOTE: Neutral conductor is sized to handle 1.73 times phase current in case of high harmonic content from non-linear loads. If non or less harmonic currents are expected, neutral conductor can be sized accordingly but not less than the phase conductor.

Copper

UPS rating	**10 kW**	**20 kW**
Voltage (V)	**200/208/220**	**480**
Input phases (AWG/kcmil)	8	8
Input EGC (AWG/kcmil)	8	10
Bypass/output phases (AWG/kcmil)	8	10
Bypass EGC/output EGC (AWG/kcmil)	8	10
Neutral (AWG/kcmil)	6	6

NOTE: Cable sizes are based on 80% rated circuit breakers for UIB, UOB, MBB, SSIB.

Recommended Upstream Protection for 200/208/220/480 V

Recommended Upstream Protection for 208 V UPS

⚠ CAUTION

HAZARD OF FIRE

- Connect only to a circuit with the below specifications.
- Connect to a circuit provided with a 63 A branch circuit overcurrent protection maximum in accordance with the National Electrical Code, ANSI/NFPA70, and the Canadian Electrical Code, Part I, C22.1.

Failure to follow these instructions can result in injury or equipment damage.

NOTE: Overcurrent protection is to be provided by others and marked with its function.

UPS rating	**10 kW**	
	Input	**Bypass**
Breaker type	HJF36100U31X	
Ir (A)	50	40
tr @ 6 Ir	0.5	
Ii (x In)	1.5	

Recommended Upstream Protection for 480 V UPS

⚠ CAUTION

HAZARD OF FIRE

- Connect only to a circuit with the below specifications.
- Connect to a circuit provided with a 63 A branch circuit overcurrent protection maximum in accordance with the National Electrical Code, ANSI/NFPA70, and the Canadian Electrical Code, Part I, C22.1.

Failure to follow these instructions can result in injury or equipment damage.

NOTE: Overcurrent protection is to be provided by others and marked with its function.

UPS rating	**20 kW**	
	Input	**Bypass**
Breaker type	HJF36100U31X	
Ir (A)	40	35
tr @ 6 Ir	0.5	
Ii (x In)	1.5	

Recommended Bolt and Lug Sizes for UL

NOTICE

RISK OF EQUIPMENT DAMAGE

Use only UL approved compression cable lugs.

Failure to follow these instructions can result in equipment damage.

Narrow One Hole Lugs for Equipment Grounding Conductor/PE Cables

Cable size	Bolt size	Cable lug type	Crimping tool	Die
10 AWG	M6 x 16 mm	LCA10-14-L	CT-1570	NA
8 AWG	M6 x 16 mm	LCA8-14-L	CT-720	CD-720-1 Red P21
6 AWG	M6 x 16 mm	LCA6-14-L	CT-720	CD-720-1 Blue P24
4 AWG	M6 x 16 mm	LCA4-14-L	CT-720	CD-720-1 Gray P29

Narrow Insulated Ferrule for Phase Cables and N Cables

Bolt size	Insulated ferrule type	Crimping tool
10 AWG	FSD82-18-C	CT-1002, CT-1003, CT-1123
8 AWG	FSD83-18-C	CT-1003, CT-1004, CT-1104, CT-1123
6 AWG	FSD84-18-C	CT-1003, CT-1004, CT-1104
4 AWG	FSD85-18-L	CT-1005

Inverter Short Circuit Capabilities (Bypass not Available)

IK1 – Short Circuit between a Phase and Neutral

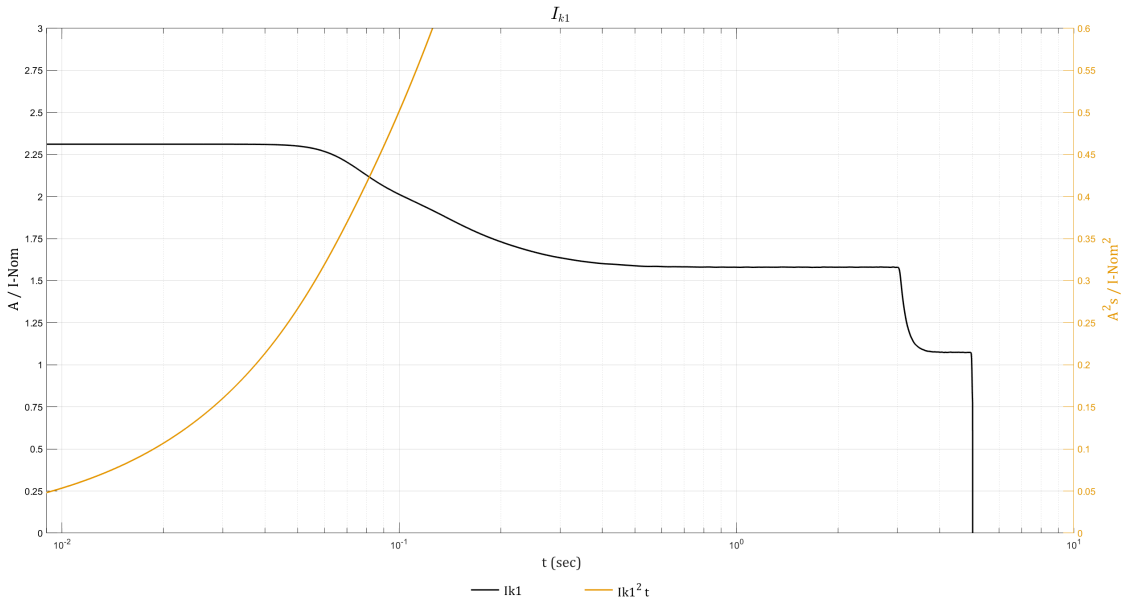

IK1 400 V

S [kVA]	10ms; I[A]/I²t [A²t]	20ms; I[A]/I²t [A²t]	30ms; I[A]/I²t [A²t]	100ms; I[A]/I²t [A²t]	1s; I[A]/I²t [A²t]
10	33 / 11	33 / 22	33 / 33	29 / 104	23 / 603
15	50 / 25	50 / 50	50 / 75	44 / 235	34 / 1356
20	67 / 45	67 / 89	67 / 134	58 / 418	46 / 2411

IK1 480 V

S [kVA]	10ms; I[A]/I²t [A²t]	20ms; I[A]/I²t [A²t]	30ms; I[A]/I²t [A²t]	100ms; I[A]/I²t [A²t]	1s; I[A]/I²t [A²t]
20	56 / 31	56 / 62	56 / 93	48 / 290	38 / 1674

IK1 208 V

S [kVA]	10ms; I[A]/I²t [A²t]	20ms; I[A]/I²t [A²t]	30ms; I[A]/I²t [A²t]	100ms; I[A]/I²t [A²t]	1s; I[A]/I²t [A²t]
10	64 / 41	64 / 82	64 / 123	56 / 386	44 / 2229

IK2 – Short Circuit between Two Phases

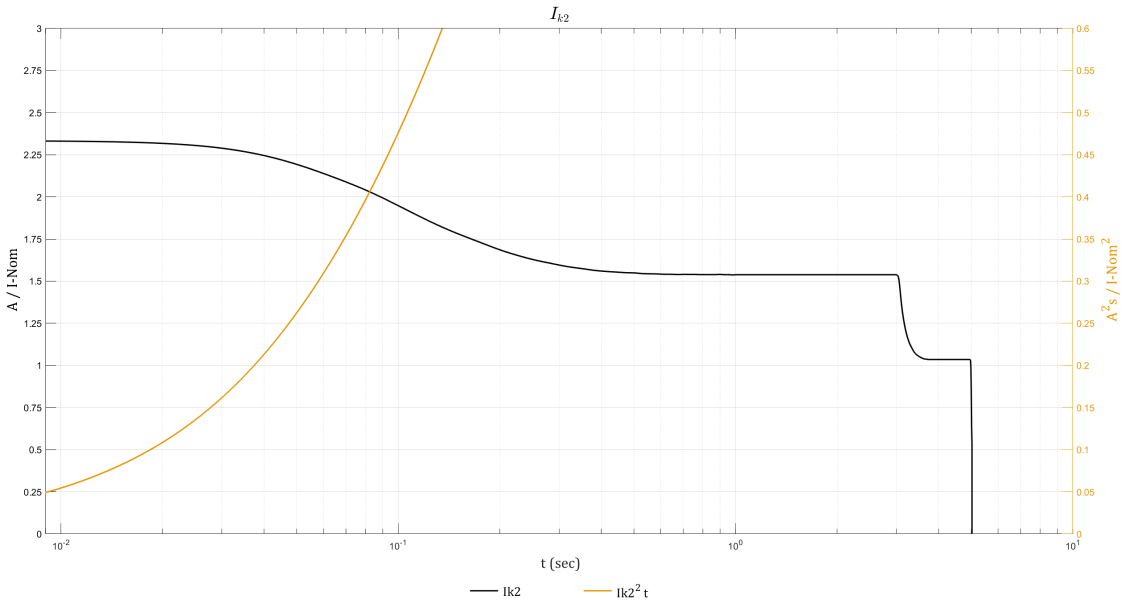

IK2 400 V

S [kVA]	10ms; I[A]/I²t [A²t]	20ms; I[A]/I²t [A²t]	30ms; I[A]/I²t [A²t]	100ms; I[A]/I²t [A²t]	1s; I[A]/I²t [A²t]
10	34 / 11	33 / 23	33 / 34	28 / 99	22 / 571
15	50 / 26	50 / 51	50 / 76	42 / 223	33 / 1285
20	67 / 45	67 / 90	67 / 135	56 / 397	44 / 2284

IK2 480 V

S [kVA]	10ms; I[A]/I²t [A²t]	20ms; I[A]/I²t [A²t]	30ms; I[A]/I²t [A²t]	100ms; I[A]/I²t [A²t]	1s; I[A]/I²t [A²t]
20	56 / 31	56 / 63	56 / 94	47 / 276	37 / 1586

IK2 208 V

S [kVA]	10ms; I[A]/I²t [A²t]	20ms; I[A]/I²t [A²t]	30ms; I[A]/I²t [A²t]	100ms; I[A]/I²t [A²t]	1s; I[A]/I²t [A²t]
10	65 / 42	64 / 84	64 / 125	54 / 367	43 / 2112

IK3 – Short Circuit between Three Phases

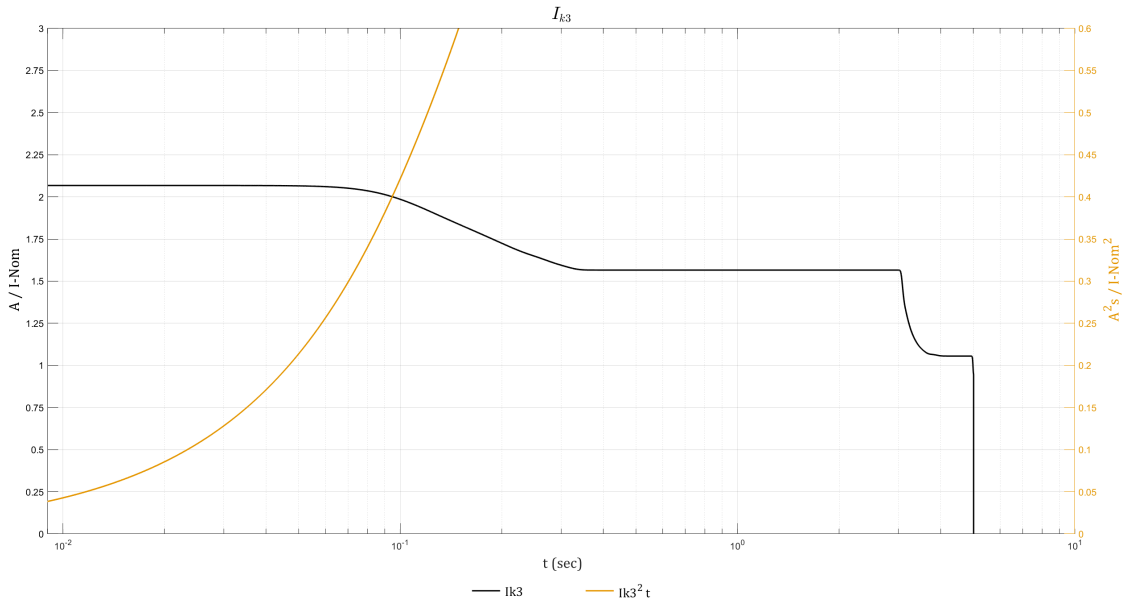

IK3 400 V

S [kVA]	10ms; I[A]/I²t [A²t]	20ms; I[A]/I²t [A²t]	30ms; I[A]/I²t [A²t]	100ms; I[A]/I²t [A²t]	1s; I[A]/I²t [A²t]
10	30 / 9	30 / 18	30 / 27	29 / 88	23 / 574
15	45 / 20	45 / 40	45 / 60	43 / 198	34 / 1290
20	60 / 36	60 / 71	60 / 107	57 / 351	45 / 2294

IK3 480 V

S [kVA]	10ms; I[A]/I²t [A²t]	20ms; I[A]/I²t [A²t]	30ms; I[A]/I²t [A²t]	100ms; I[A]/I²t [A²t]	1s; I[A]/I²t [A²t]
20	50 / 25	50 / 49	50 / 74	48 / 244	38 / 1593

IK3 208 V

S [kVA]	10ms; I[A]/I²t [A²t]	20ms; I[A]/I²t [A²t]	30ms; I[A]/I²t [A²t]	100ms; I[A]/I²t [A²t]	1s; I[A]/I²t [A²t]
10	57 / 33	57 / 66	57 / 99	55 / 325	43 / 2121

Torque Specifications

Bolt size	Torque
M4	1.7 Nm (1.25 lb-ft / 15 lb-in)
M5	2.2 Nm (1.62 lb-ft / 19.5 lb-in)
M6	5 Nm (3.69 lb-ft / 44.3 lb-in)
M8	17.5 Nm (12.91 lb-ft / 154.9 lb-in)
M10	30 Nm (22 lb-ft / 194.7 lb-in)
M12	50 Nm (36.87 lb-ft / 442.5 lb-in)

Environment

	Operating	Storage
Temperature	0 °C to 40 °C (32 °F to 104 °F)	-15 °C to 40 °C (5 °F to 104 °F)for systems with batteries.
Relative humidity	5 - 95% non-condensing	10 - 80% non-condensing
Elevation	Designed for operation in 0-3000 m (0-10000 feet) elevation. Power derating required from 1000-3000 m (3300-10000 feet): Up to 1000 m (3300 feet): 1.000 Up to 1500 m (5000 feet): 0.975 Up to 2000 m (6600 feet): 0.950 Up to 2500 m (8300 feet): 0.925 Up to 3000 m (10000 feet): 0.900	
Audible noise one meter (three feet) from unit	400 V 10-20 kW: 49 dB at 70% load, 55 dB at 100% load 480 V 20 kW and 208 V 10 kW: 49 dB at 70% load, 55 dB at 100% load	
Protection class	IP20	
Color	RAL 9003, gloss level 85%	

Compliance

Safety	IEC 62040-1: 2017, Edition 2.0, Uninterruptible Power Systems (UPS) - Part 1: Safety requirements UL 1778 5th edition
EMC/EMI/RFI	IEC 62040-2: 2016, 3rd edition Uninterruptible Power Systems (UPS) - Part 2: Electromagnetic compatibility (EMC) requirements C2 FCC Part 15 Subpart B, Class A IEEE C62.41-1991 Location Category B2, IEEE Recommended Practice on Surge Voltages in Low-Voltage AC Power Circuits
Transportation	IEC 60721-4-2 Level 2M1
Seismic	ICC-ES AC 156 (2015): OHSPD Pre-approved; Sds=1.33 g for z/h=1 and Sds=1.63 g for z/h=0; Ip= 1.5
Earthing system	TN-C, TN-S, TT, IT
Overvoltage category	This UPS is OVCII compliant. If the UPS is installed in an environment with an OVC rating higher than II, an SPD (surge protection device) must be installed upstream of the UPS to reduce the overvoltage category to OVCII.
Protective class	I
Pollution degree	2

Performance

Performance in accordance with: IEC 62040-3: 2021, 3rd edition Uninterruptible Power Systems (UPS) - Part 3: Method of specifying the performance and test requirements.

Output performance classification (according to IEC 62040-3, Clause 5.3.4): VFI-SS-11

UPS Weights and Dimensions

	Weight kg (lbs)	Height mm (in)	Width mm (in)	Depth mm (in)
UPS with one battery string	245 (540)	1485 (58.46)	333 (13.11)	847 (33.35)

NOTE: One battery module weighs approximately 32 kg (70.5 lbs). One battery string consists of four battery modules.

Clearance

NOTE: Clearance dimensions are published for airflow only. Consult with the local safety codes and standards for additional requirements in your local area.

NOTE: The required minimum rear clearance is 150 mm (5.91 in).

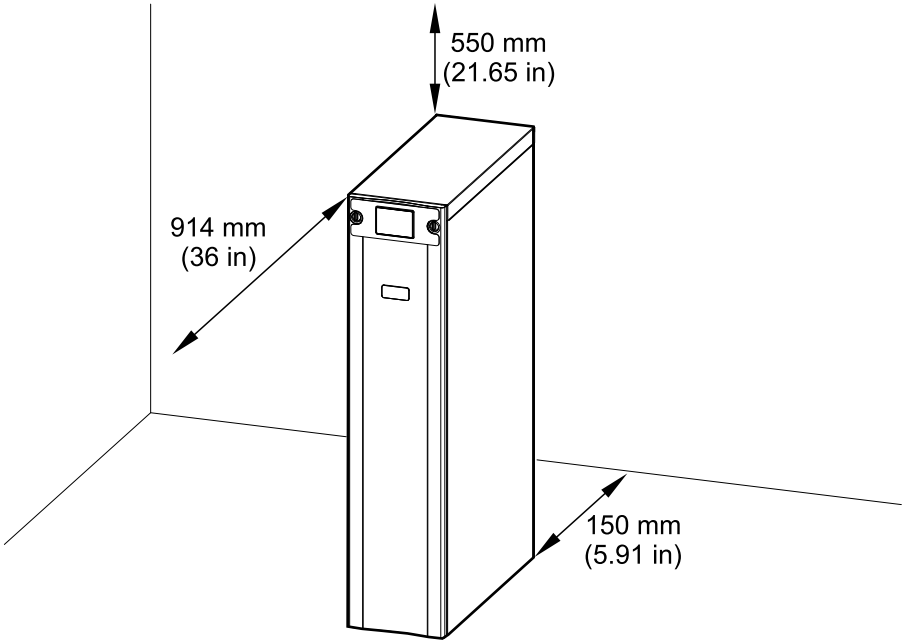

Single System Overview

UIB	Unit input breaker
SSIB	Static switch input breaker
IMB	Internal maintenance breaker
UOB	Unit output breaker
BB	Battery breaker in UPS for internal batteries

NOTE: In some system configurations, UIB/SSIB/UOB are switches (with upstream protective device). Consult the site specific documentation for details.

Single System – Single Mains

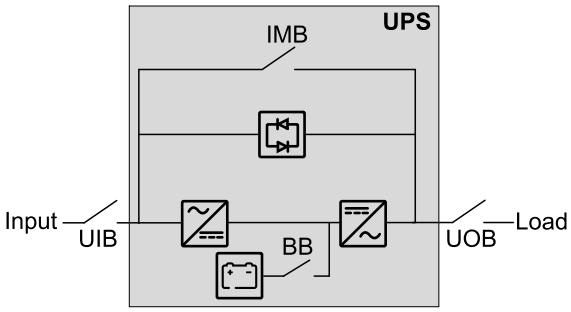

Single System – Dual Mains

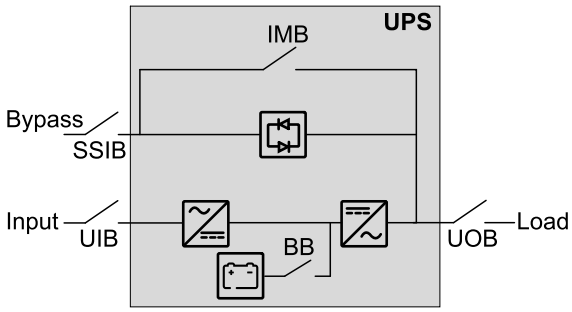

Parallel System Overview

UIB	Unit input breaker
SSIB	Static switch input breaker
IMB	Internal maintenance breaker
UOB	Unit output breaker
SIB	System isolation breaker
BB	Battery breaker in UPS for internal batteries
MBB	External maintenance bypass breaker

Parallel Systems with Individual Unit Input Breaker UIB and Static Switch Input Breaker SSIB

Galaxy VS can support up to 4 UPSs in parallel for capacity and up to 3+1 UPSs in parallel for redundancy with individual unit input breaker UIB and static switch input breaker SSIB.

NOTE: In parallel systems an external maintenance bypass breaker MBB must be provided and the internal maintenance breaker IMB* must be padlocked in the open position.

Parallel System – Single Mains

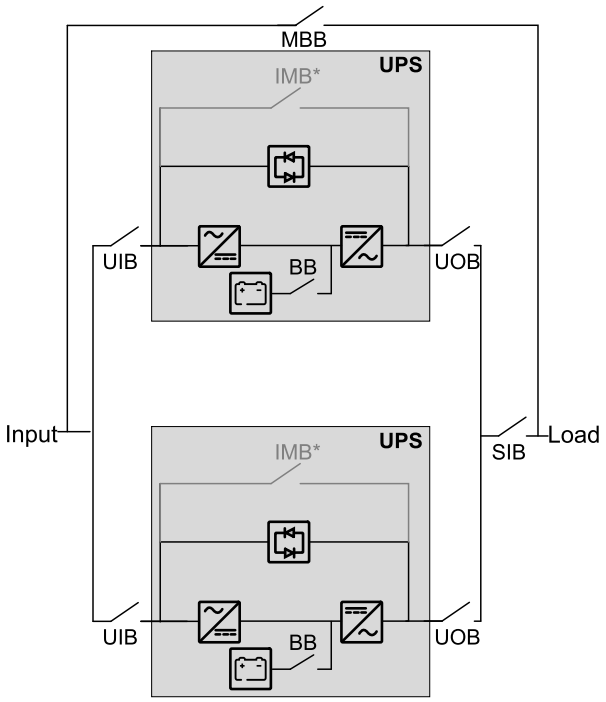

Parallel System – Dual Mains

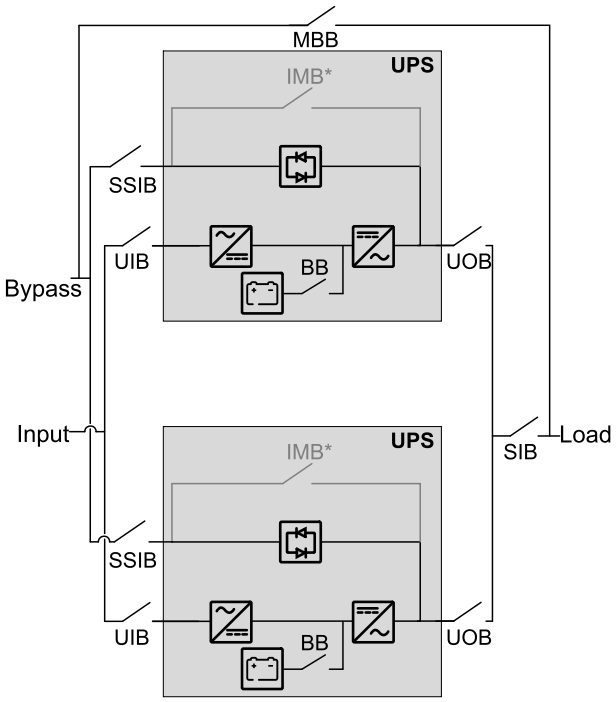

Parallel Systems with Shared Unit Input Breaker UIB and Static Switch Input Breaker SSIB

Galaxy VS can support up to 4 UPSs in parallel for capacity and up to 3+1 UPSs in parallel for redundancy with shared unit input breaker UIB and static switch input breaker SSIB.

NOTE: In parallel systems an external maintenance bypass breaker MBB must be provided and the internal maintenance breaker IMB* must be padlocked in the open position.

Parallel System – Single Mains

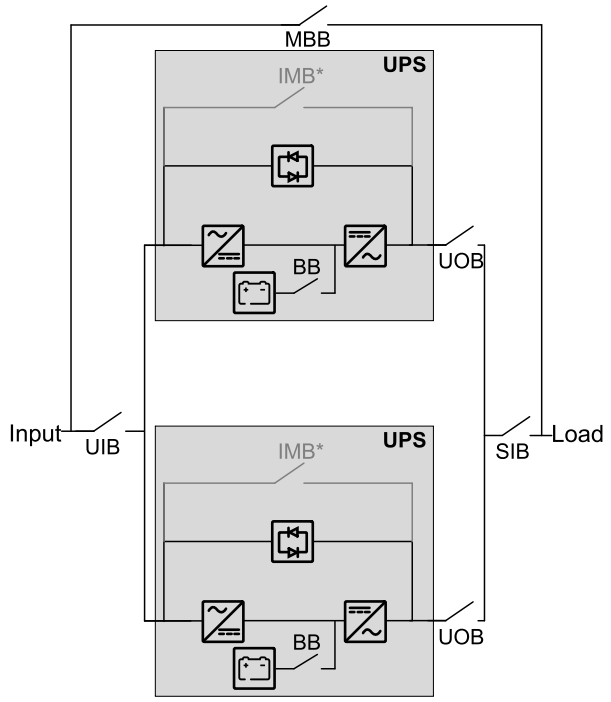

Parallel System – Dual Mains

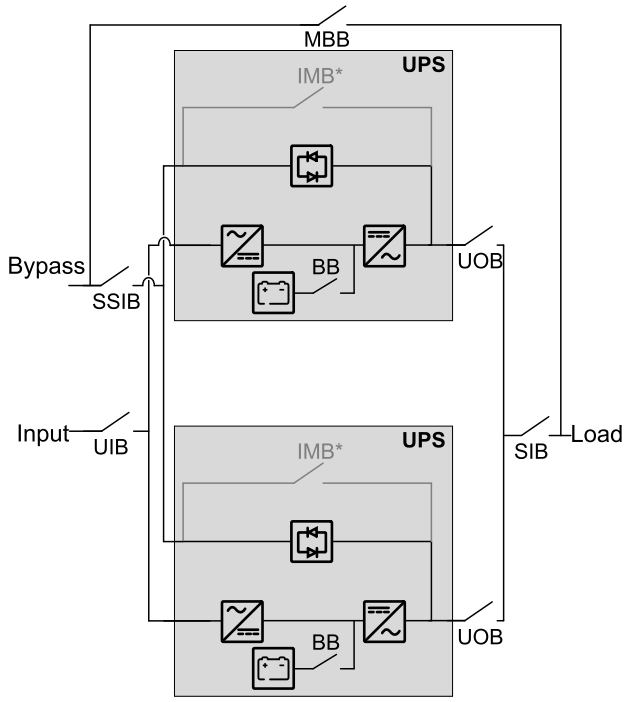

Overview of Installation Kits

Installation Kit 0M-88357

Part	Used in	Number of units
USB cable	Connect the Modbus Cables, page 50.	1 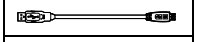
150 Ohm resistor		10
Terminal connector		2

Optional Seismic Kit GVSOPT017

Part	Used in	Number of units
M8 x 20 mm bolt with washer	Install the Seismic Anchoring (Option), page 38 and Final Installation, page 53.	10
Rear anchor		1
Front seismic anchoring bracket		1
Rear seismic anchoring bracket		1 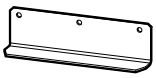
Rear connection plate		1

Optional Parallel Kit GVSOPT006

Part	Used in	Number of units
PBUS1 cable 0W6268	Connect the PBUS Cables, page 49.	1
PBUS2 cable 0W6267		1
This kit contains parts for use with other UPS models which are not relevant for this installation.		

Installation Procedure

Single System

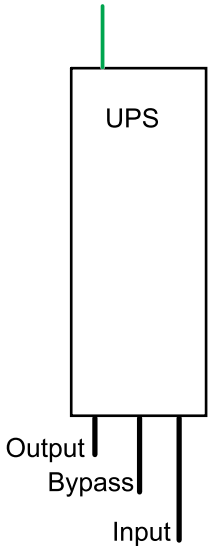

Parallel System

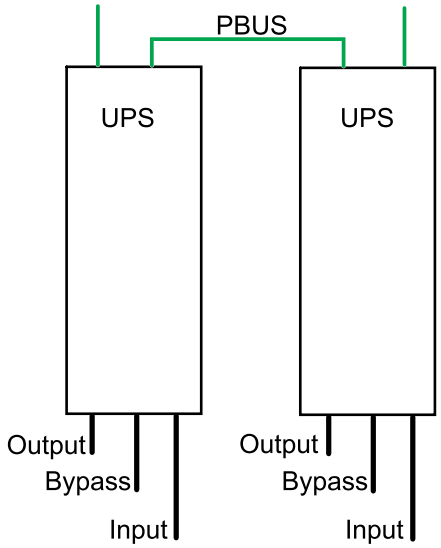

Signal cable
Power cable

⚠ CAUTION

TIP HAZARD

Do not remove the transportation brackets from the UPS until it is time to anchor the UPS to the floor.

Failure to follow these instructions can result in injury or equipment damage.

1. Install the Seismic Anchoring (Option), page 38.
2. Prepare for Installation, page 39.
3. Connect the Power Cables, page 43.
4. Connect the Signal Cables, page 45.
5. Connect the Signal Cables from Switchgear and Third-Party Auxiliary Products, page 47.
6. **For parallel system**:
   a. Install a padlock on the internal maintenance breaker IMB in the open position on all UPSs in the parallel system.
   b. Connect the PBUS Cables, page 49.
7. Connect the External Communication Cables, page 50.
8. Add Translated Safety Labels to Your Product, page 52.
9. Final Installation, page 53.

For moving or decommissioning the UPS after installation has been completed, see Decommission or Move the UPS to a New Location, page 58.

Install the Seismic Anchoring (Option)

1. Mount the rear anchor(s) to the floor. Use appropriate hardware for the floor type – the hole diameter in the rear anchor is ø14 mm.

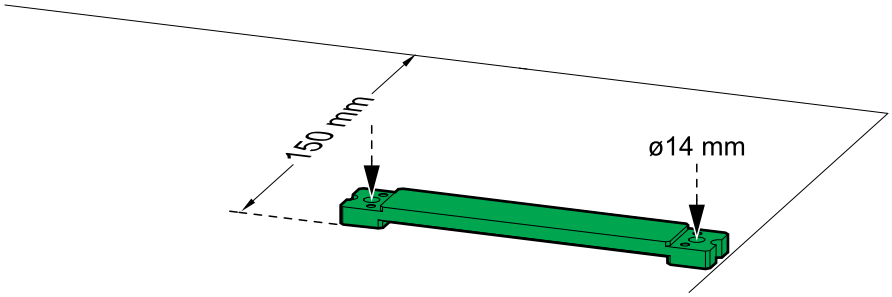

Prepare for Installation

DANGER

HAZARD OF ELECTRIC SHOCK, EXPLOSION, OR ARC FLASH

Do not drill or punch holes for cables or conduits with the gland plate installed and do not drill or punch holes in close proximity to the UPS.

Failure to follow these instructions will result in death or serious injury.

NOTE: Route the signal cables separately from the power cables and route the Class 2/SELV cables separately from the non-Class 2/non-SELV cables.

1. Remove the front panel.
2. Remove the top cover:
   a. Remove the screws and tilt the front of the top cover upwards.
   b. Slide the top cover towards the rear to remove it. Taps in the rear of the top cover must disconnect from the slots in the rear of the UPS.

3. Remove the battery cover. Disconnect the battery terminals from the front of the battery modules.

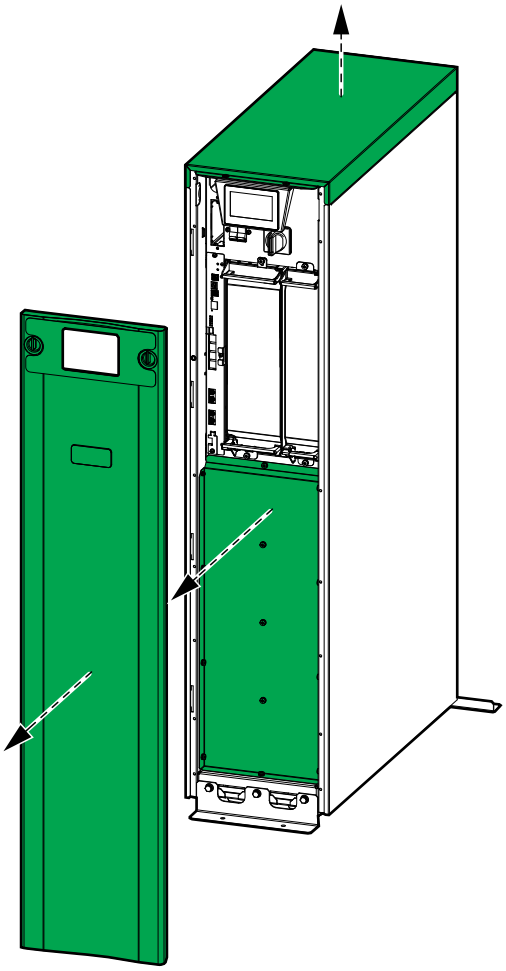

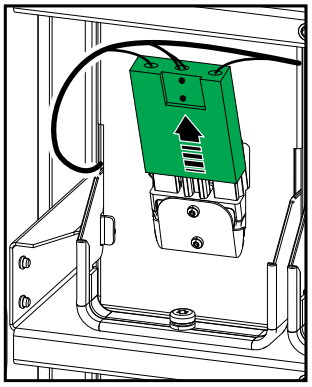

4. Remove the rear gland plates and the rear brush plates from the UPS. These are for signal cable routing.

Rear View of the UPS

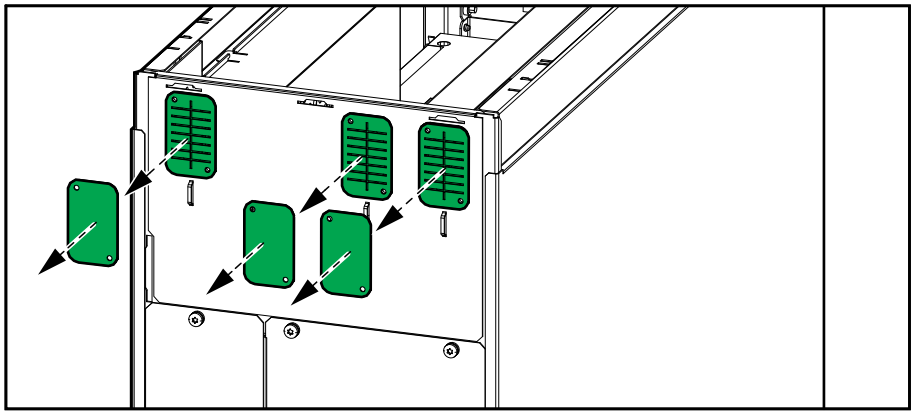

5. Perform one of the following:
   - **For installation without conduits**: Reinstall the brush plates.
   - **For installation with conduits**: Drill a hole in the gland plates for conduits, install conduits, and reinstall the gland plates.
6. Route the non-Class 2/non-SELV signal cables through the left rear brush/gland plate and into the UPS.

Top View of the UPS without Conduits

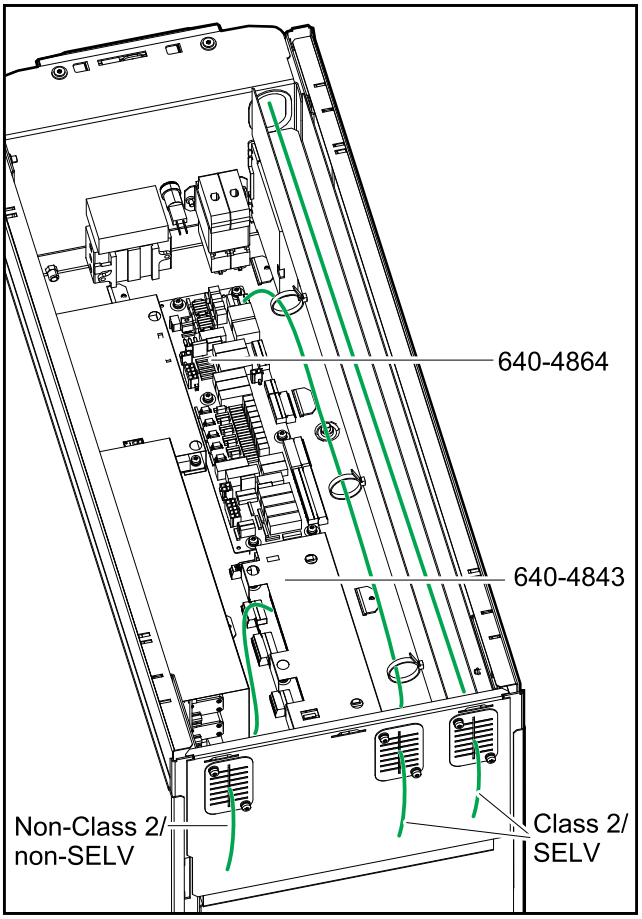

Top View of the UPS with Conduits

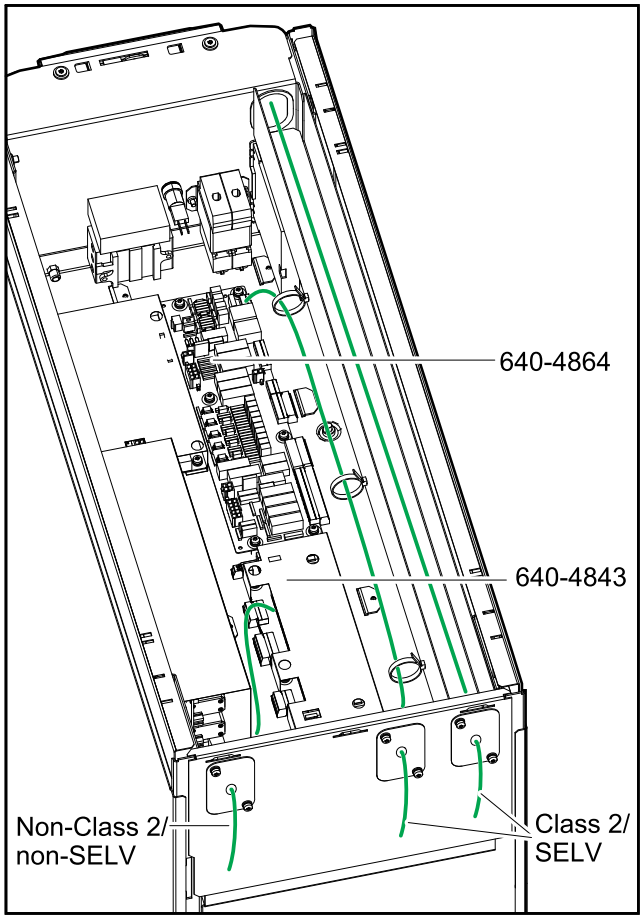

7. Route the Class 2/SELV signal cables through the middle rear brush/gland plate and into the UPS.

8. Route the external communication cables that connect to the controller box through the right rear brush/gland plate and through the cable channel to the front of the UPS.
9. Remove the left gland plate from the rear of the UPS.

Rear View of the UPS

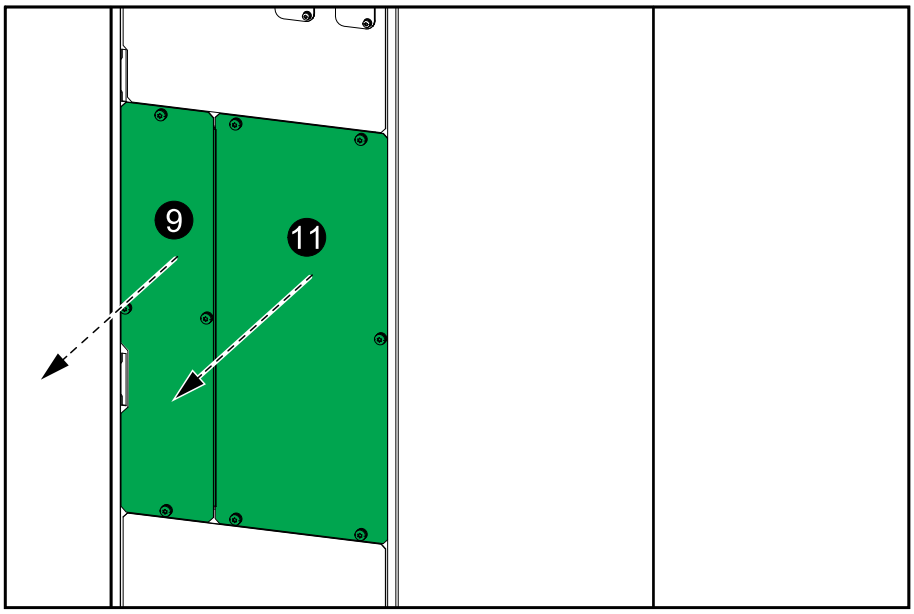

10. Drill/punch holes for power cables/conduits in the gland plate. Install conduits (not provided), if applicable.
11. Remove the right rear plate for better access.

Connect the Power Cables

NOTICE

RISK OF EQUIPMENT DAMAGE

To ensure correct load sharing in bypass operation in a parallel system:

- All bypass cables must be the same length for all UPSs.
- All output cables must be the same length for all UPSs.
- All input cables must be the same length for all UPSs (only required in single mains system).

Failure to follow these instructions can result in equipment damage.

NOTE: The UPS is preconfigured for TNS earthing system. 3-wire installation using a bonding busbar will result in a higher leakage current.

1. **Only for TN-C/3-wire earthing system**: Move the bonding busbar from position (A) to position (B) to connect the N busbar to the G/PE busbar.

Rear View of UPS

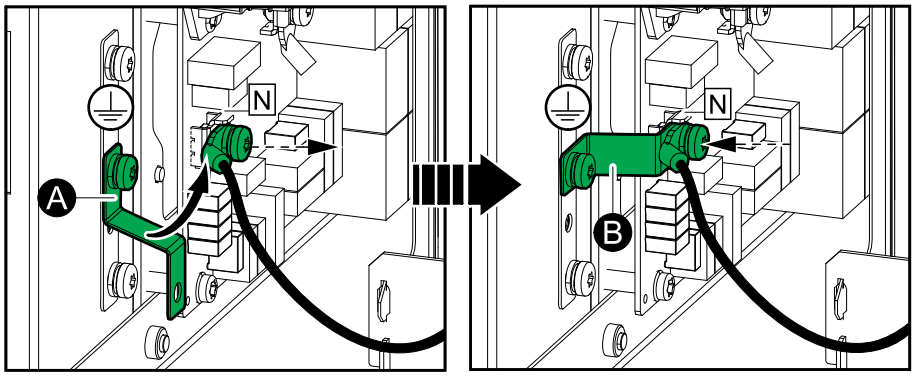

2. **Only for dual mains system**: Remove the indicated single mains jumper cables located behind the output/bypass terminals.

Rear View of UPS

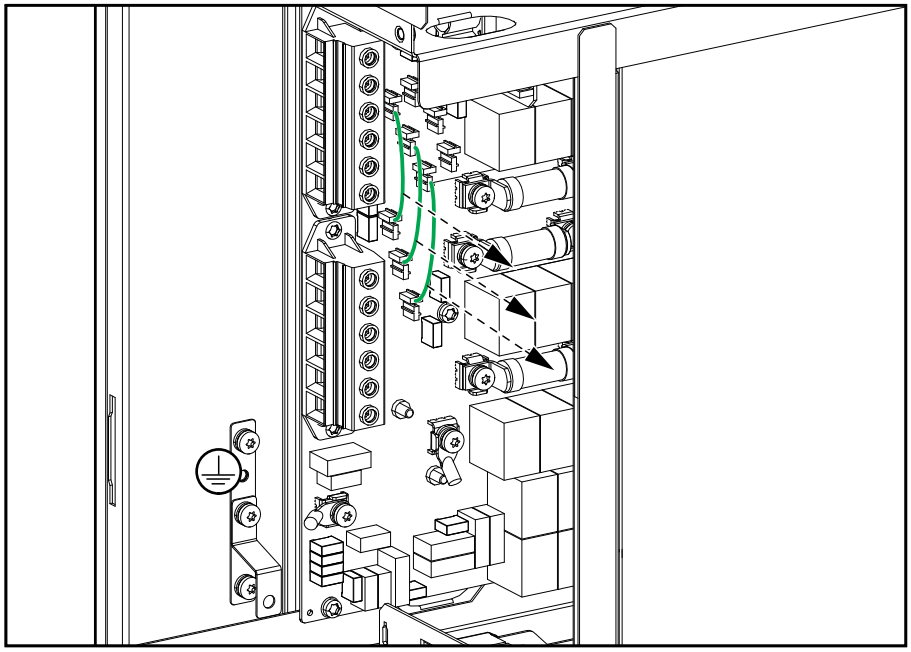

3. Connect the power cables as shown:
   a. Connect the equipment grounding conductor/PE cables.
   b. Connect the input cables.
   c. **Only for dual mains system**: Connect the bypass cables.
   d. Connect the output cables.

   NOTE: Torque the insulated ferrules to 3.7 Nm (2.7 lb-ft / 32.7 lb-in).

Rear View of UPS

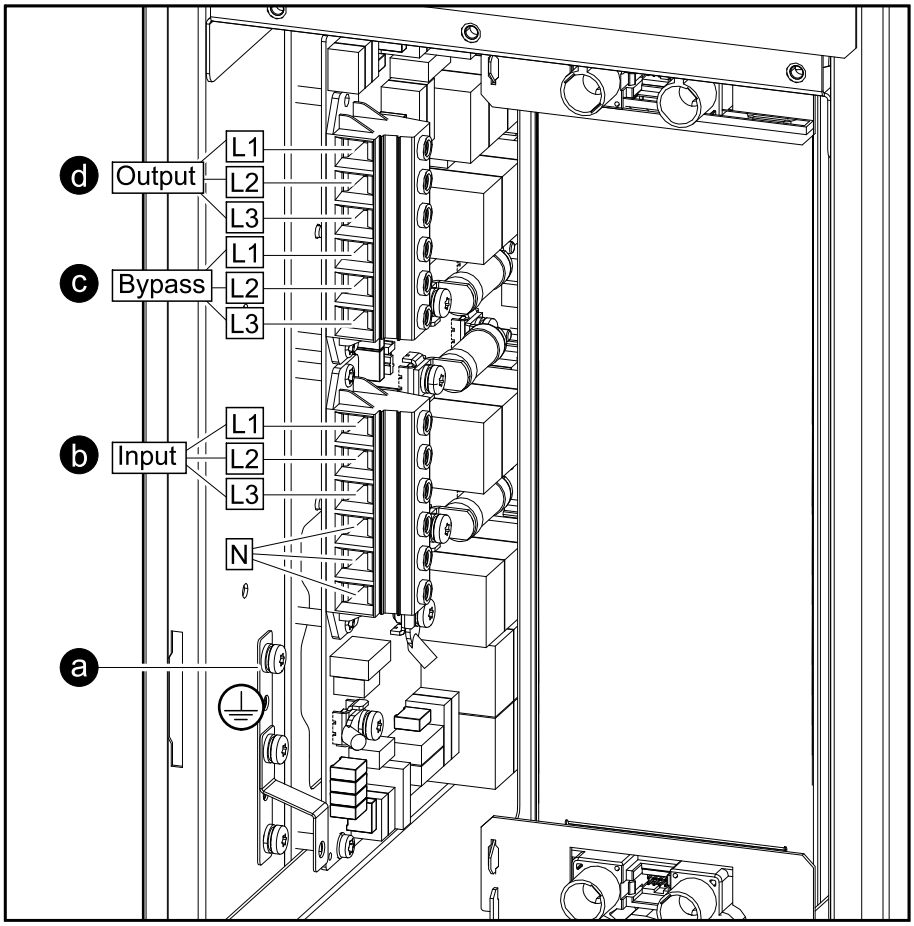

⚠ CAUTION

RISK OF EQUIPMENT DAMAGE

Check the fastening of the cable lugs/insulated ferrules. If the cable lugs/insulated ferrules move due to pulling on cables, the bolt/screw can become loose.

Failure to follow these instructions can result in injury or equipment damage.

4. Reinstall the right rear plate.
5. Reinstall the left rear gland plate on the UPS.

Connect the Signal Cables

⚠ CAUTION

RISK OF EQUIPMENT DAMAGE

All Class 2/SELV signal cables shall be double insulated/jacket cable and minimum rated for 30 VDC. All non-Class 2/non-SELV signal cables shall be double insulated/jacket cable and minimum rated for 600 VAC.

Failure to follow these instructions can result in injury or equipment damage.

NOTE: Route the signal cables separately from the power cables and route the Class 2/SELV cables separately from the non-Class 2/non-SELV cables.

1. Connect the Class 2/SELV signal cables from the building EPO to board 640-4864 terminal J6600 in the UPS according to one of the options below.

   The EPO circuit is considered Class 2/SELV. Class 2/SELV circuits must be isolated from the primary circuitry. Do not connect any circuit to the EPO terminal block unless it can be confirmed that the circuit is Class 2/SELV.

   EPO Configurations (640-4864 terminal J6600, 1-9)

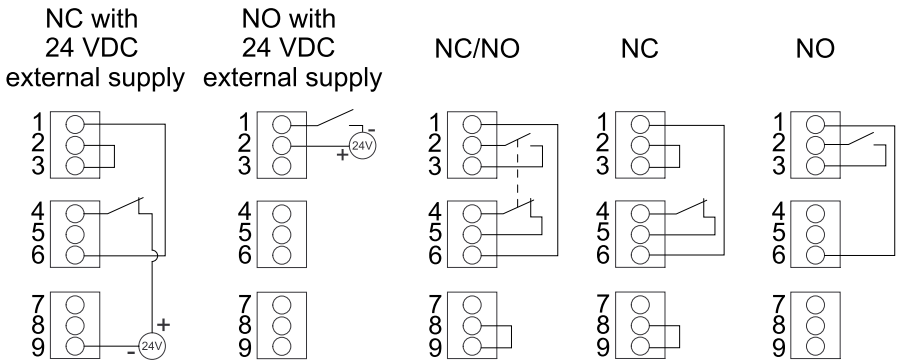

   The EPO input supports 24 VDC.

   NOTE: The default setting for the EPO activation is to turn off the inverter.

   If you want the EPO activation to transfer the UPS into forced static bypass operation instead, please contact Schneider Electric.

2. Connect the Class 2/SELV signal cables from the auxiliary products to board 640-4864 in the UPS. Follow the instructions in the auxiliary product manuals.

3. Connect the Class 2/SELV signal cables to the input contacts and output relays on board 640-4864 in the UPS.

   Do not connect any circuit to the input contacts unless it can be confirmed that the circuit is Class 2/SELV.

   The input contacts support 24 VDC 10 mA. All circuits connected must have the same 0 V reference.

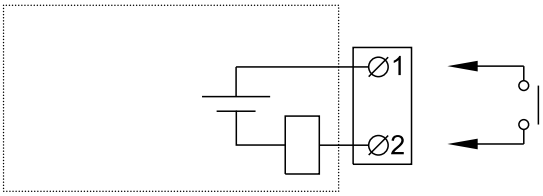

Name	Description	Location
IN _1 (input contact 1)	Configurable input contact	640-4864 terminal J6616, 1-2
IN _2 (input contact 2)	Configurable input contact	640-4864 terminal J6616, 3-4
IN _3 (input contact 3)	Configurable input contact	640-4864 terminal J6616, 5-6
IN _4 (input contact 4)	Configurable input contact	640-4864 terminal J6616, 7-8

   The output relays support 24 VAC/VDC 1 A. All external circuitry must be fused with maximum 1 A fast acting fuses.

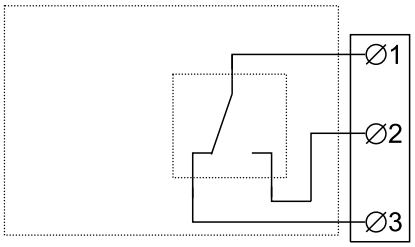

Name	Description	Location
OUT _1 (output relay 1)	Configurable output relay	640-4864 terminal J6617, 1-3
OUT _2 (output relay 2)	Configurable output relay	640-4864 terminal J6617, 4-6
OUT _3 (output relay 3)	Configurable output relay	640-4864 terminal J6617, 7-9
OUT _4 (output relay 4)	Configurable output relay	640-4864 terminal J6617, 10-12

4. Connect the non-Class 2/non-SELV signal cables from the auxiliary products to board 640-4843 in the UPS. Follow the instructions in the auxiliary product manuals.

Connect the Signal Cables from Switchgear and Third-Party Auxiliary Products

NOTE: Route the signal cables separately from the power cables and route the Class 2/SELV cables separately from the non-Class 2/non-SELV cables.

Maximum Breaker Configuration in Single System with Third-Party Switchgear

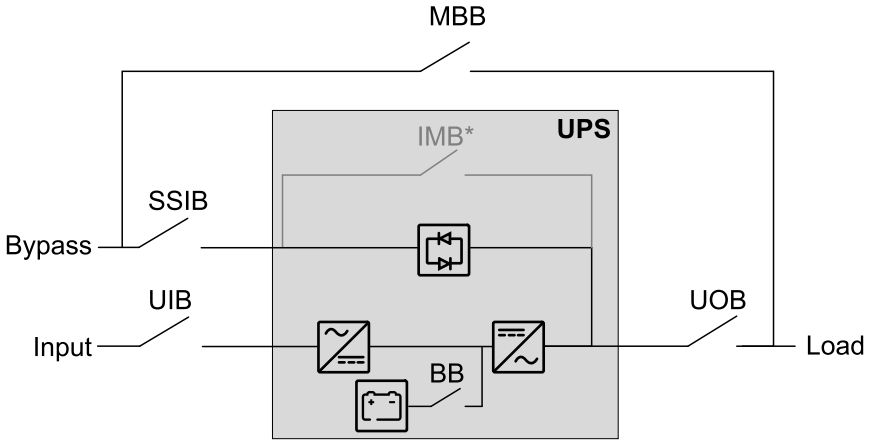

NOTE: The internal maintenance breaker IMB* cannot be used in a system with an external maintenance bypass breaker MBB and the internal maintenance breaker IMB* must be padlocked in the open position.

1. Connect signal cables from the breaker indicator lights in your switchgear to board 640-4864 terminal J6618 in the top of the UPS. If an external supply is used, remove jumper from J6618 pin 8 and 9.

   NOTE: The breaker indicator light circuit is considered Class 2/SELV. Class 2/SELV circuits must be isolated from the primary circuitry. Do not connect any circuit to the breaker indicator light terminals unless it can be confirmed that the circuit is Class 2/SELV.

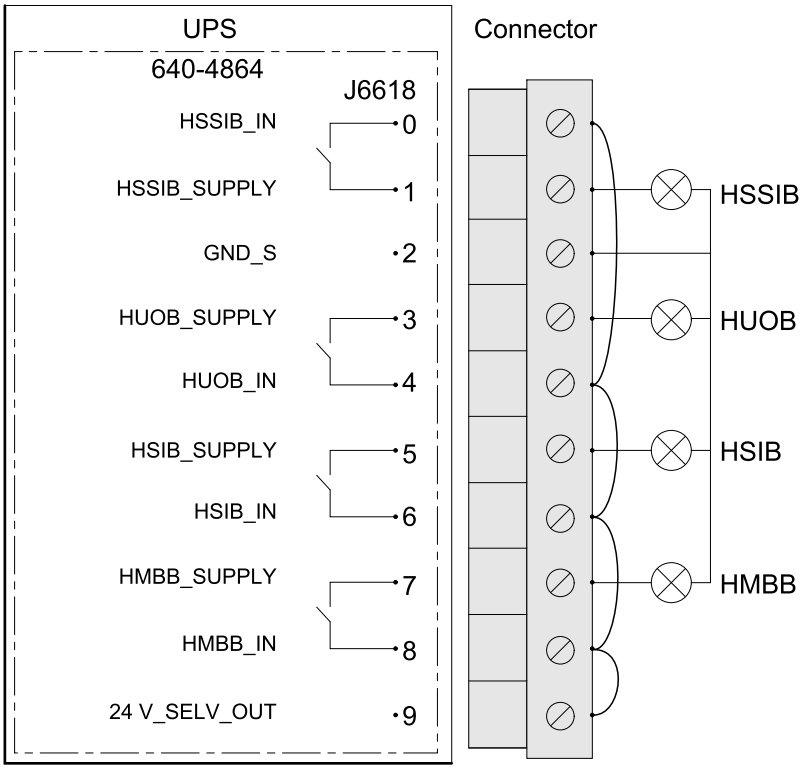

2. Connect signal cables from AUX switches in your switchgear to board 640-4843 in the top of the UPS.

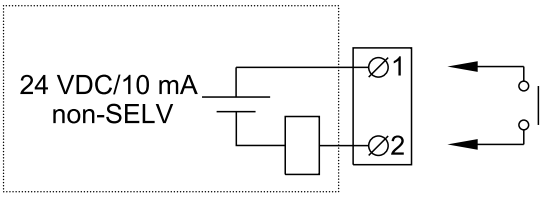

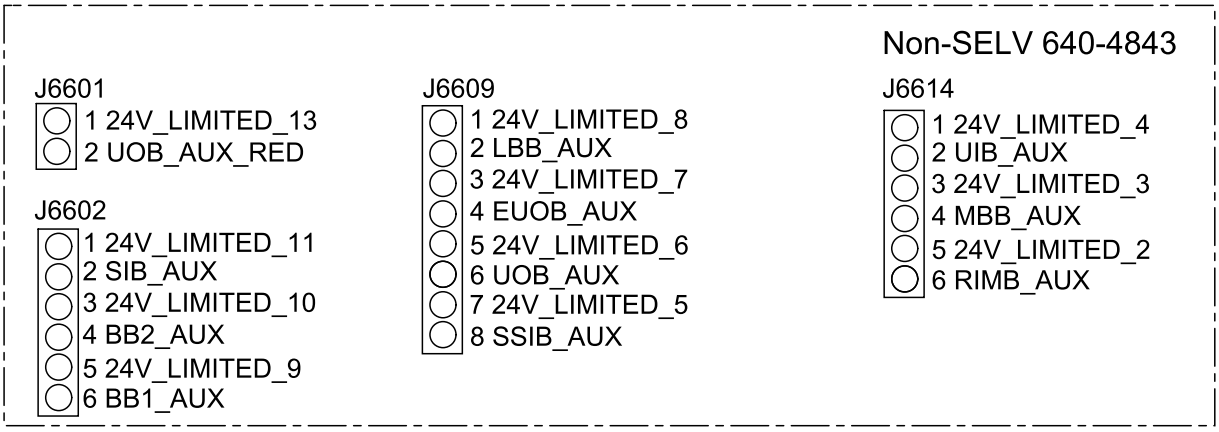

Terminal number	Function	Connection
J6601	UOB_RED (redundant AUX switch in unit output breaker)	Connect to redundant AUX switch in unit output breaker UOB.
J6602	SIB (system isolation breaker)	Connect to normally open (NO) AUX switch in system isolation breaker SIB for parallel system. SIB must contain an AUX switch for each connected UPS.
J6609	UOB (unit output breaker)	Connect to normally open (NO) AUX switch in unit output breaker UOB.
	SSIB (static switch input breaker)	Connect to normally open (NO) AUX switch in static switch input breaker SSIB. SSIB must contain an AUX switch for each connected UPS.
J6614	UIB (unit input breaker)	Connect to normally open (NO) AUX switch in unit input breaker UIB. UIB must contain an AUX switch for each connected UPS.
	MBB (maintenance bypass breaker)	Connect to normally closed (NC) AUX switch in maintenance bypass breaker MBB. MBB must contain an AUX switch for each connected UPS.

Connect the PBUS Cables

⚠CAUTION

RISK OF EQUIPMENT DAMAGE

All PBUS cables shall be double insulated/jacket cable and minimum rated for 30 VDC. It is recommended to use the PBUS cables provided by Schneider Electric.

Failure to follow these instructions can result in injury or equipment damage.

1. Connect the provided PBUS 1 (white) and PBUS 2 (red) cables to the PBUS ports in the UPS controller boxes. Route the PBUS cables through the cable channel in the UPSs.

   Front View of Controller Box

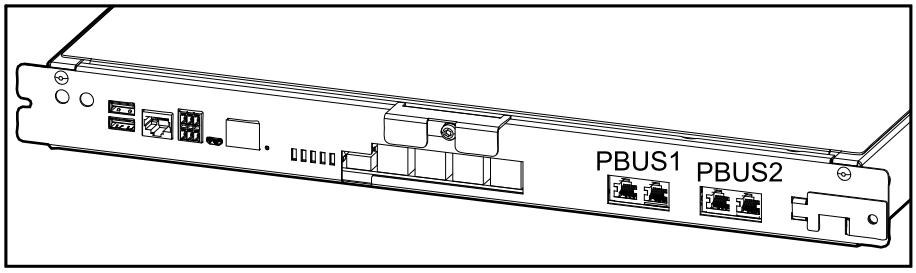

2. Mount termination plugs (T) in the unused connectors.

   Example of System with Three UPSs in Parallel

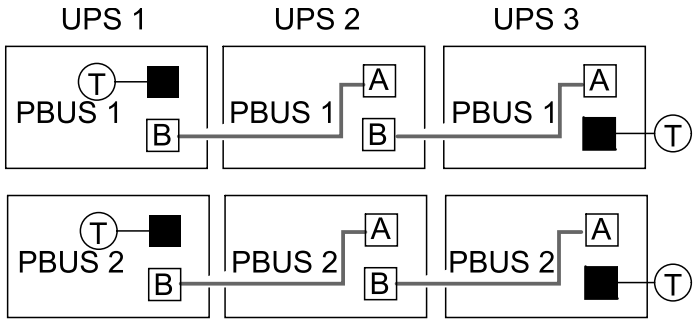

Connect the External Communication Cables

1. Connect the external communication cables to the ports in the UPS controller box.

Front View of the Controller Box

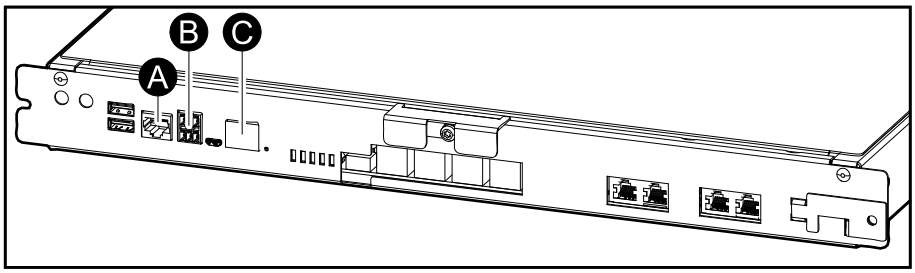

A. Universal I/O port for built-in network management card.

B. Modbus port for built-in network management card.

C. Network port for built-in network management card. Use a shielded network cable.

NOTE: Check that you are connecting to the correct port to avoid network communication conflicts.

Connect the Modbus Cables

1. Connect the Modbus cables to the UPS(s). Use either 2-wire or 4-wire connection.
   - All Modbus signal cables shall be double insulated/jacket cable and minimum rated for 30 VDC.
   - Shielded twisted pair cables must be used for Modbus connections. The shield connection to the ground must be as short as possible (ideally below 1 cm). The cable shield must be connected to the Ch Gnd pin on each device.
   - Wiring should be done in accordance with local wiring codes.
   - Route signal cables separately from power cables to ensure sufficient isolation.
   - The Modbus port is galvanically isolated with the Com pin as ground reference.

Example: 2-Wire Connection with Two UPSs

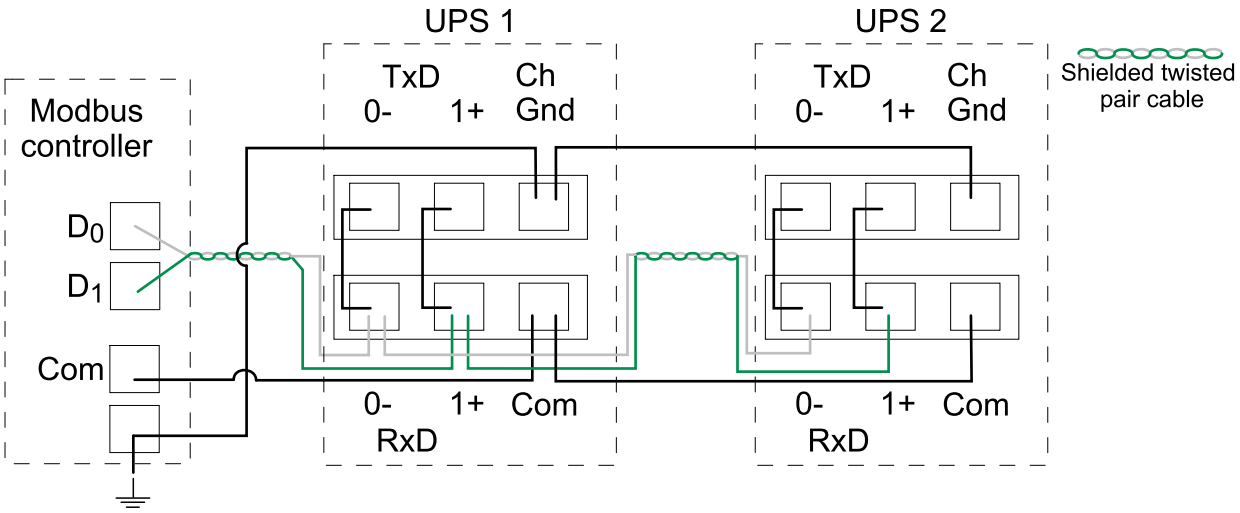

Example: 4-Wire Connection with Two UPSs

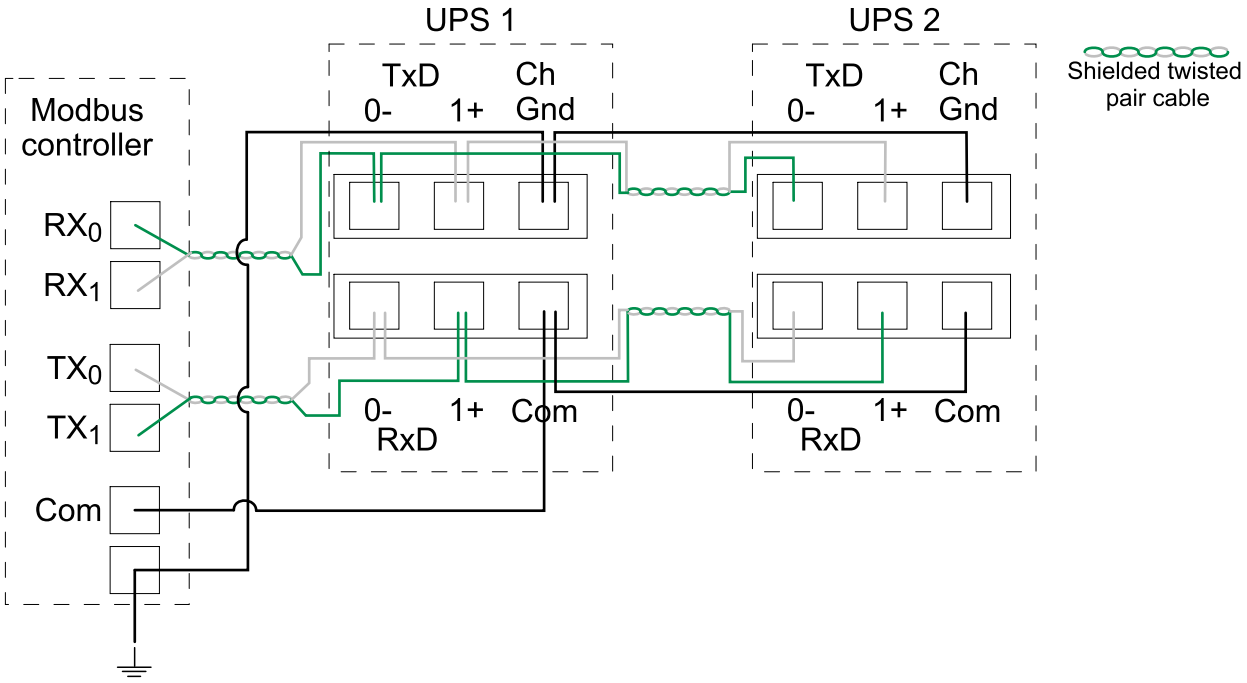

2. Install 150 Ohm termination resistors at each end of each bus if the buses are very long and operate at high data rates. Busses under 610 meters (2000 feet) at 9600 baud or under 305 meters (1000 feet) at 19.200 baud should not require termination resistors.

Add Translated Safety Labels to Your Product

The safety labels on your product are in English and French. Sheets with translated safety labels are provided with your product.

1. Find the sheets with translated safety labels provided with your product.
2. Check which 885-XXX numbers are on the sheet with translated safety labels.
3. Locate the safety labels on your product that match the translated safety labels on the sheet – look for the 885-XXX numbers.
4. Add the replacement safety label in your preferred language to your product on top of the existing French safety label.

Final Installation

⚠⚠DANGER

HAZARD OF ELECTRIC SHOCK, EXPLOSION, OR ARC FLASH

Batteries can present a risk of electric shock and high short-circuit current. The following precautions must be observed when working on batteries

- Remove watches, rings, or other metal objects.
- Use tools with insulated handles.
- Wear protective glasses, gloves and boots.
- Do not lay tools or metal parts on top of batteries.
- Disconnect the charging source prior to connecting or disconnecting battery terminals.
- Determine if the battery is inadvertently grounded. If inadvertently grounded, remove source from ground. Contact with any part of a grounded battery can result in electric shock. The likelihood of such shock can be reduced if such grounds are removed during installation and maintenance (applicable to equipment and remote battery supplies not having a grounded supply circuit).

Failure to follow these instructions will result in death or serious injury.

⚠WARNING

RISK OF EQUIPMENT DAMAGE

Wait until the system is ready to be powered up before installing batteries in the system. The time duration from battery installation until the UPS system is powered up must not exceed 72 hours or 3 days.

Failure to follow these instructions can result in death, serious injury, or equipment damage.

1. Reinstall the top cover:
   a. Tilt the top cover and slide it onto the UPS from the rear. Taps in the rear of the top cover must connect to the slots in the rear of the UPS.
   b. Push the top cover down in the front.

Rear View of the UPS

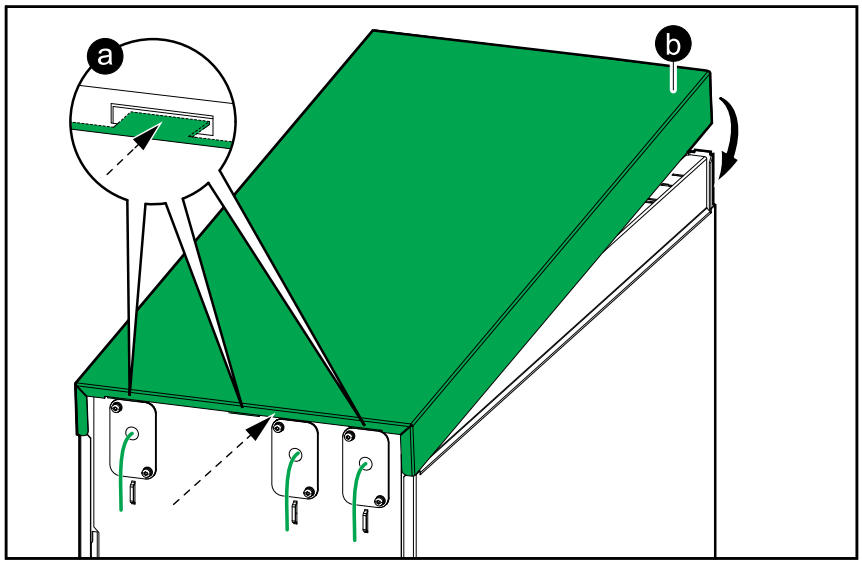

   c. Reinstall the screws.

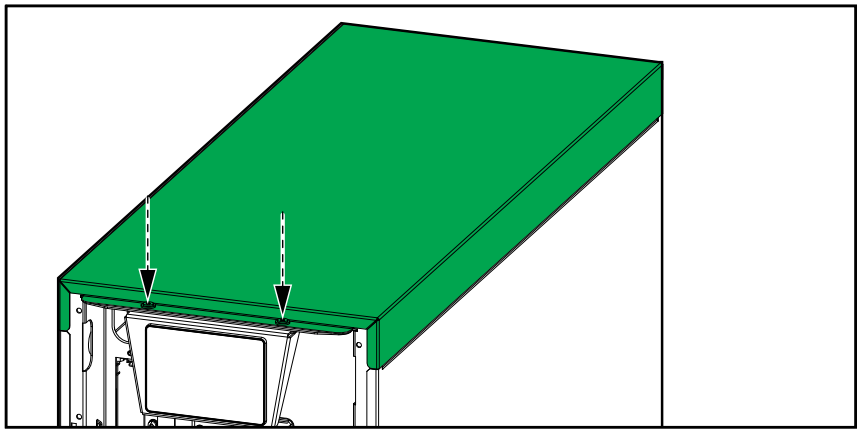

2. Remove the rear transportation bracket from the UPS.

3. **Only for seismic anchoring**:
   a. Install rear anchoring bracket on the UPS with the provided M8 bolts.

Rear View of the UPS

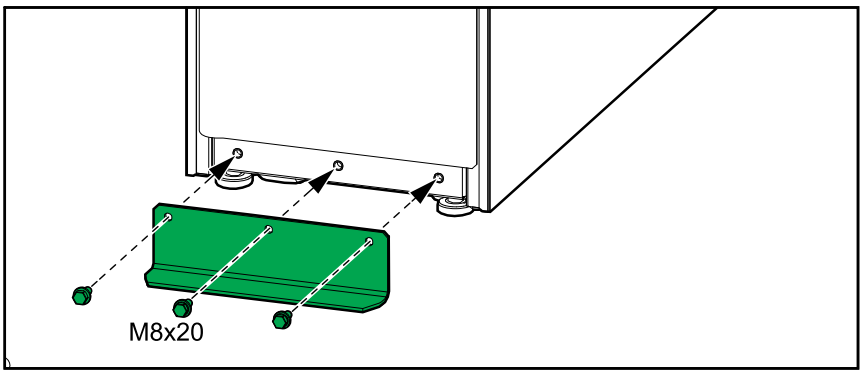

   b. Push the UPS into position so the rear anchoring bracket connects to the rear anchor.

Rear View of the UPS

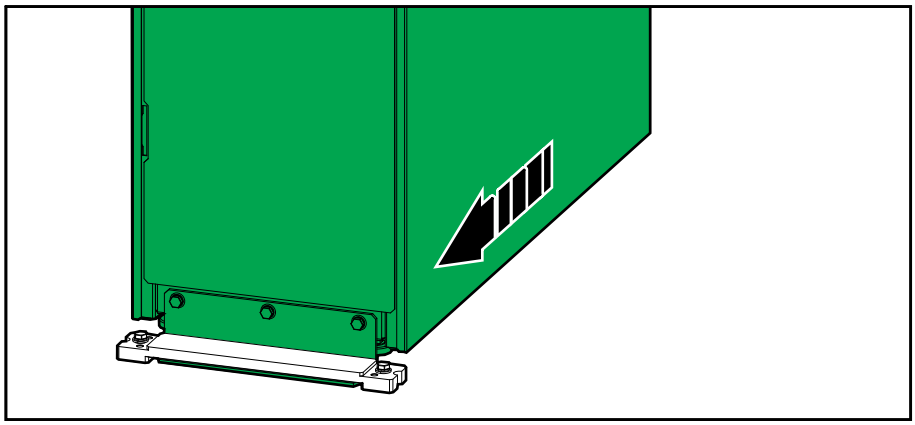

4. Lower the front and rear leveling feet on the UPS with a wrench until they connect with the floor. Use a bubble-leveler to check that the UPS is level.

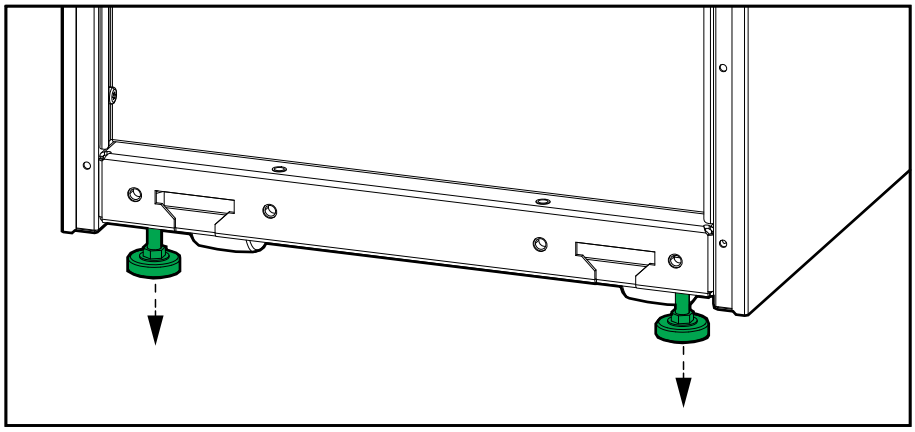

NOTICE
RISK OF EQUIPMENT DAMAGE Do not move the cabinet after the leveling feet have been lowered. **Failure to follow these instructions can result in equipment damage.**

5. **Only for non-seismic anchoring**: Mount the front transportation bracket to the floor. The UPS can be top-heavy and tip over if not bolted to the floor. Use appropriate hardware for the floor type – the hole diameter in the front transportation bracket is ø9 mm

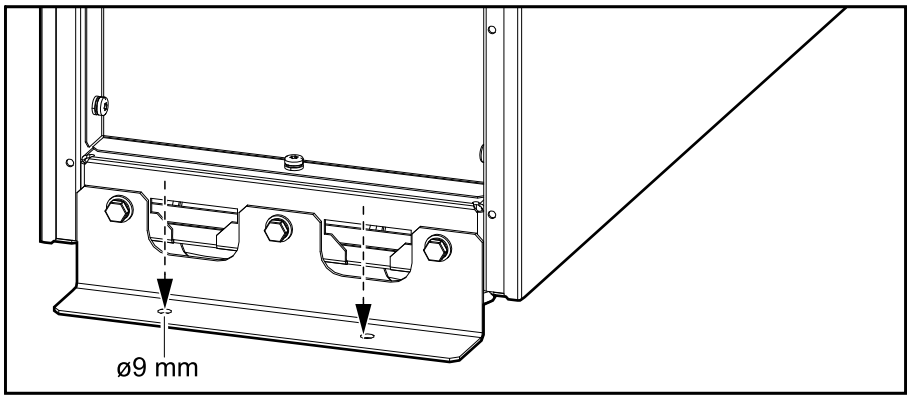

6. **Only for seismic anchoring**:
   a. Remove the front transportation bracket from the UPS.
   b. Install the seismic front anchoring bracket on the UPS.
   c. Mount the seismic front anchoring bracket on the UPS to the floor. Use appropriate hardware for the floor type – the hole diameter in the seismic front anchoring bracket is ø18 mm.

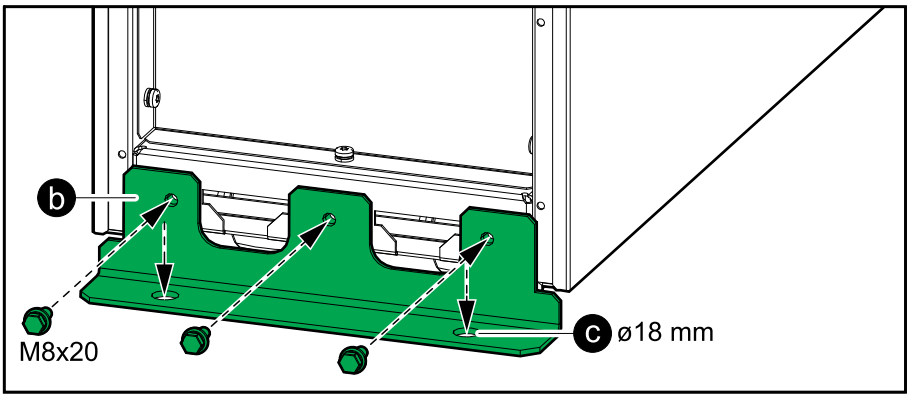

7. Set the battery breaker BB to the open (OFF) position.
8. Push extra battery modules (if any) into the slot. Fill the shelves from the bottom and upwards.
9. Turn down the battery module handle on the extra battery modules and fasten the handle to the shelf with the provided screw.
10. Connect the battery terminals to the front of the battery modules.

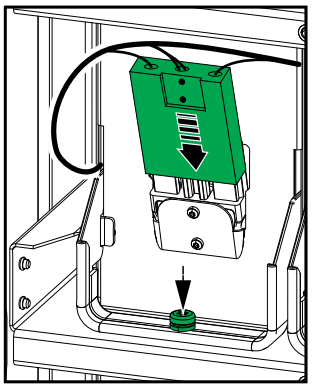

11. Reinstall all plates and covers removed in Prepare for Installation, page 39.

12. Reinstall the front panel on the UPS:
    a. Insert the two taps in the bottom of the front panel in the UPS at a tilted angle.
    b. Reconnect the front panel strap to the UPS.
    c. Close the front panel and lock with the two locking knobs.

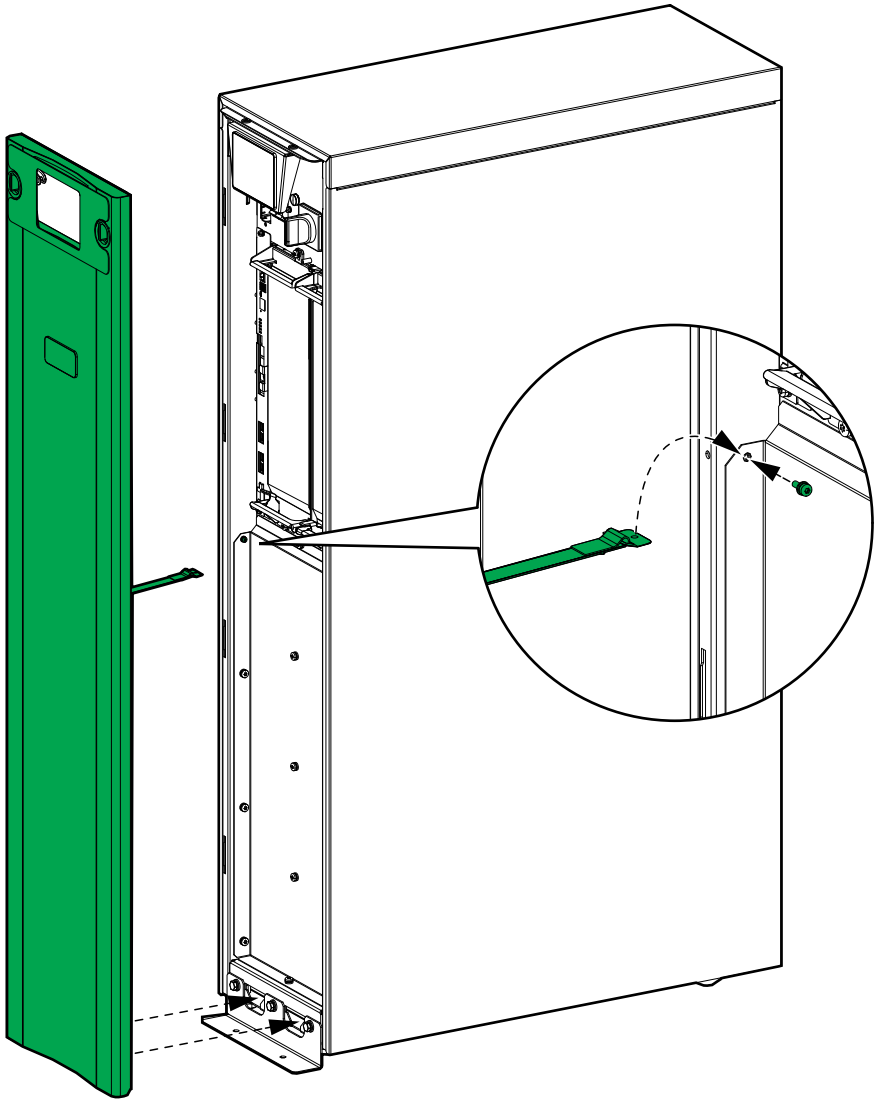

Decommission or Move the UPS to a New Location

1. Shut down the UPS completely – follow the instructions in the UPS operation manual.
2. Lockout/Tagout the battery breaker BB to the open (OFF) position on the UPS.
3. Lockout/Tagout all breakers in the maintenance bypass panel/switchgear in the OFF (open) position.
4. Remove the front panel from the UPS.
5. Lockout/Tagout the internal maintenance breaker IMB in the OFF (open) position.

6. Remove the power module from the UPS:

⚠ CAUTION

HEAVY LOAD

Power modules are heavy and require two persons to lift.

- The 20 kW power module weighs 25 kg (55 lbs).

Failure to follow these instructions can result in injury or equipment damage.

a. Remove the screws and push the unlock switch.

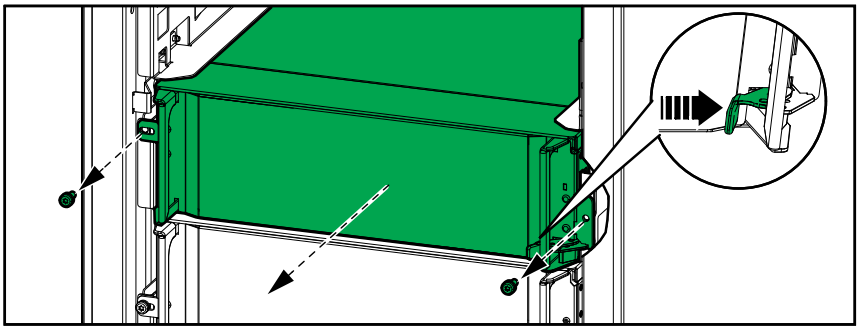

b. Pull the power module halfway out. A locking mechanism prevents the power module from being pulled all the way out.

c. Release the lock by pressing the release button on both sides of the power module and remove the power module.

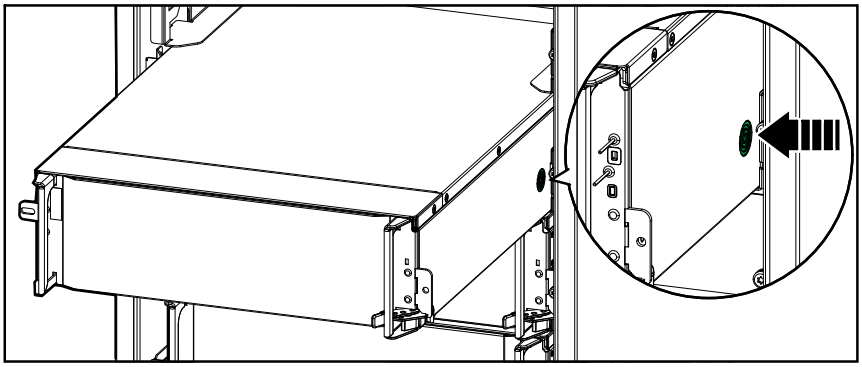

d. Install a filler plate (if available) in front of the empty power module slot.

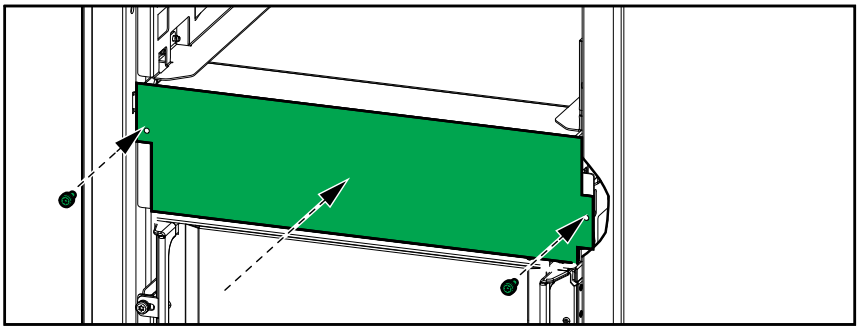

e. Store the power modules safely until reinstallation.

⚠ WARNING

RISK OF EQUIPMENT DAMAGE

- Store the power modules at an ambient temperature of -15 to 40 °C (5 to 104 °F), 10-80% non-condensing humidity.
- Store the power modules in their original protective packaging.

Failure to follow these instructions can result in death, serious injury, or equipment damage.

7. Remove the battery cover.

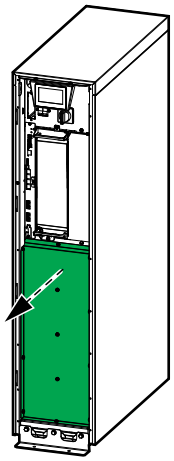

8. Disconnect the battery terminals from the front of all the battery modules.

DANGER

HAZARD OF ELECTRIC SHOCK, EXPLOSION, OR ARC FLASH

Batteries can present a risk of electric shock and high short-circuit current. The following precautions must be observed when working on batteries:

- Servicing of batteries must only be performed or supervised by qualified personnel knowledgeable of batteries and the required precautions. Keep unqualified personnel away from batteries.
- Do not dispose of batteries in a fire as they can explode.
- Do not open, alter, or mutilate batteries. Released electrolyte is harmful to the skin and eyes. It may be toxic.
- Remove watches, rings, or other metal objects.
- Use tools with insulated handles.
- Wear protective glasses, gloves and boots.
- Do not lay tools or metal parts on top of batteries.
- Set the battery breaker BB to the open (OFF) position before starting this procedure.

Failure to follow these instructions will result in death or serious injury.

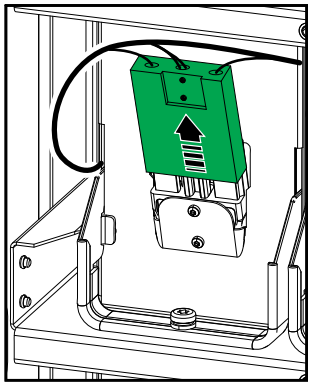

9. Remove the battery modules from the two upper rows. Leave the battery modules in the two bottom rows to increase weight stability.

⚠ CAUTION

HEAVY LOAD

Battery modules are heavy and require two persons to lift.

- The battery module weighs 30 kg (66 lbs).

Failure to follow these instructions can result in injury or equipment damage.

a. Remove the screw from the battery module handle and turn the handle upwards.

b. Pull the battery module carefully out of the slot.

c. Save for reinstallation.

⚠ WARNING

RISK OF EQUIPMENT DAMAGE

- If the UPS system remains de-energized for a long period, we recommend that you energize the UPS system for a period of 24 hours at least once every month. This charges the installed battery modules, thus avoiding irreversible damage from deep discharging.
- Store the battery modules at an ambient temperature of -15 to 40 ° C (5 to 104 °F).
- Store the battery modules in their original protective packaging.
- Battery modules stored at -15 to 25 °C (5 to 77 °F) must be recharged every six months to avoid damages from deep discharging. Battery modules stored at over 25 °C (77 °F) must be recharged at shorter intervals.

Failure to follow these instructions can result in death, serious injury, or equipment damage.

10. Remove the rear plates from the UPS.

Rear View of the UPS

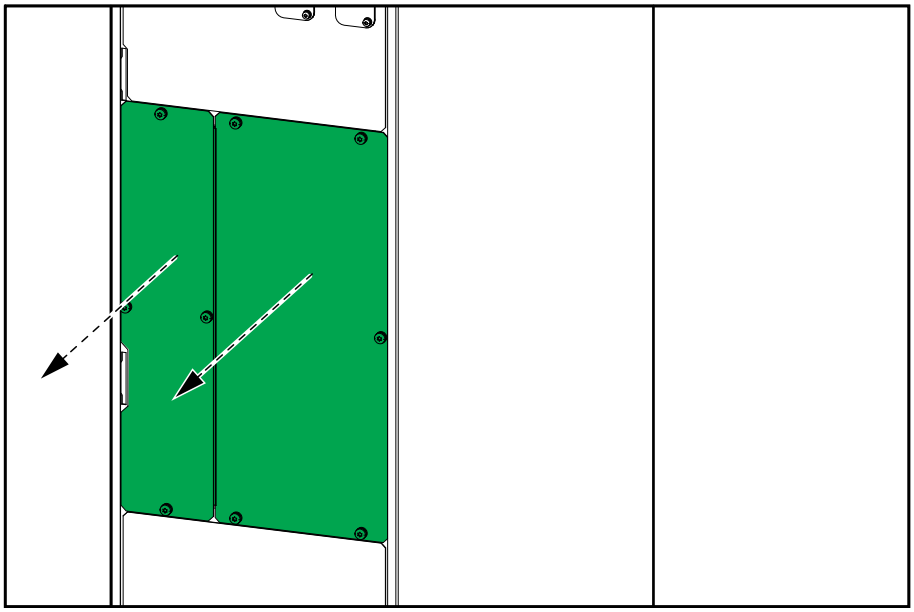

11. Measure for and verify ABSENCE of voltage on each input/bypass/output terminal before continuing.

⚠⚠DANGER

HAZARD OF ELECTRIC SHOCK, EXPLOSION, OR ARC FLASH

Measure for and verify ABSENCE of voltage on each input/bypass/output terminal before continuing.

Failure to follow these instructions will result in death or serious injury.

Rear View of UPS

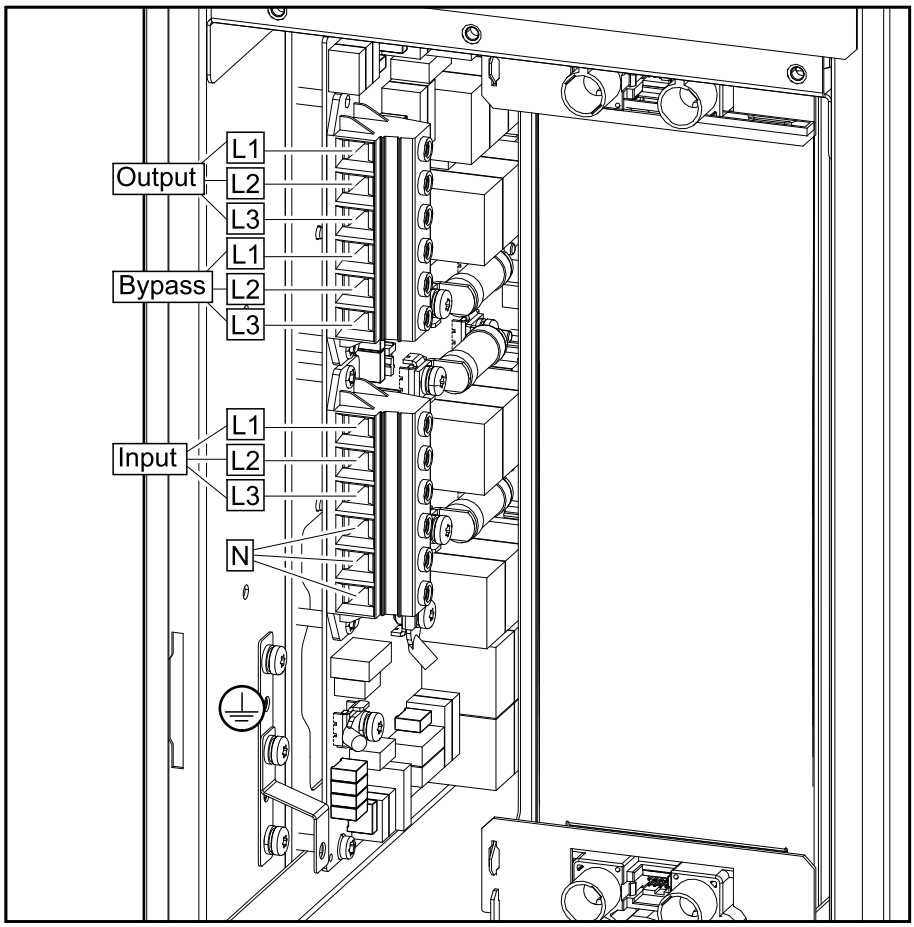

12. Disconnect and remove all power cables from the UPS. Reinstall the rear plates on the UPS. See Connect the Power Cables, page 43 for details.

13. Remove the top cover from the UPS.

14. Disconnect and remove any signal cables from the top and front of the UPS.

Top View of the UPS

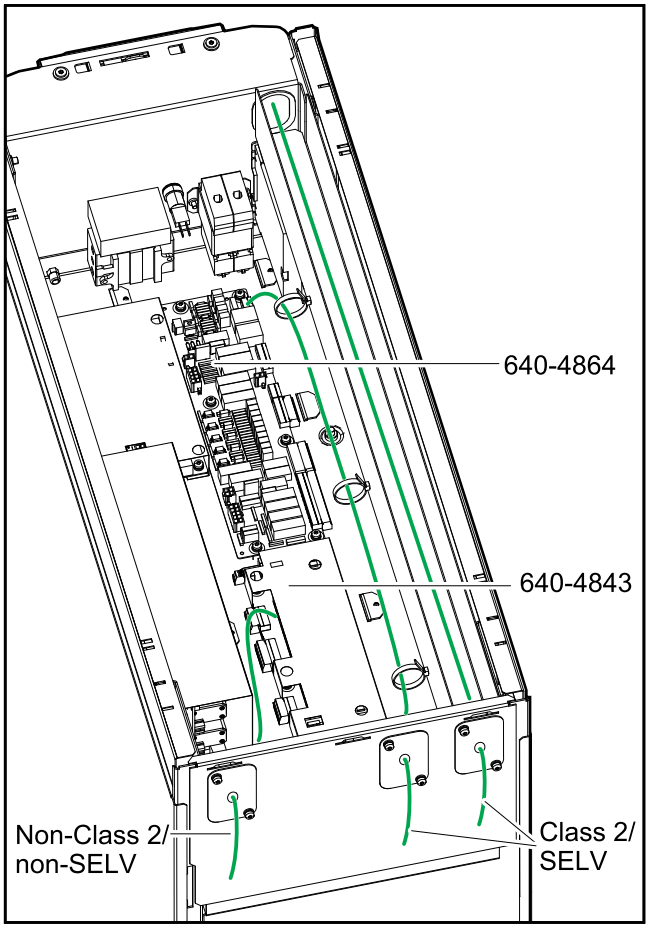

15. Reinstall all removed plates and covers. See Final Installation, page 53 for details.

16. Remove the seismic front anchoring bracket/front transportation bracket from the UPS. Save for reinstallation.

Front View of the UPS with Front Transportation Bracket

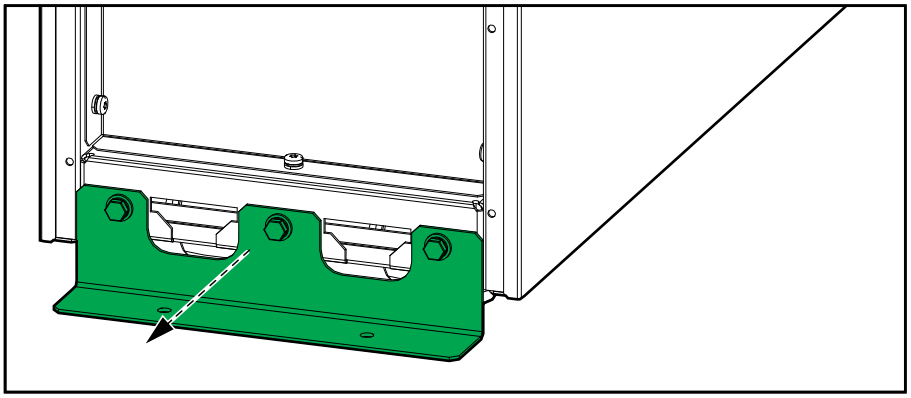

Front View of the UPS with Seismic Front Anchoring Bracket

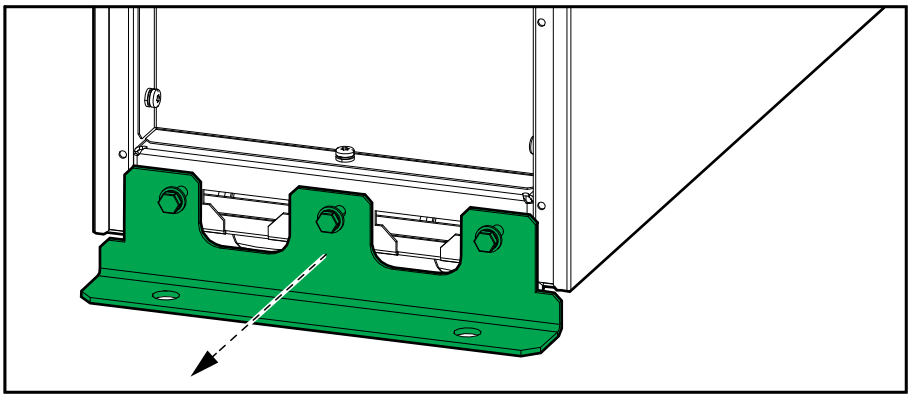

17. If the rear transportation bracket is available, install it on the rear of the UPS for increased stability.

⚠ CAUTION

TIP HAZARD

IF the rear transportation bracket is not installed, the UPS can tip over easily. Move with care.

Failure to follow these instructions can result in injury or equipment damage.

18. Reinstall the front panel on the UPS:
    a. Insert the two tabs in the bottom of the front panel in the UPS at a tilted angle.
    b. Reconnect the front panel strap to the UPS.
    c. Close the front panel and lock with the two locking knobs.

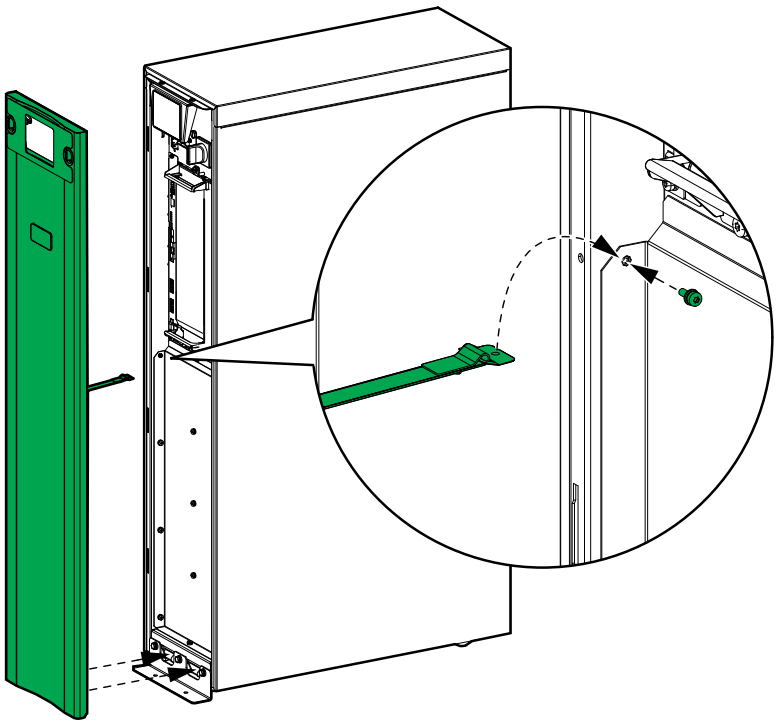

19. Raise the feet of the UPS until the casters have full contact with the floor.
20. You can now move the UPS by rolling it over the floor on the casters.

⚠ WARNING

TIPPING HAZARD

- The casters of the UPS are exclusively for transport on flat, even, hard, and horizontal surfaces.
- The casters of the UPS are intended for transport over short distances (i.e. inside the same building).
- Move at a slow pace and pay close attention on the floor conditions and the balance of the UPS.

Failure to follow these instructions can result in death, serious injury, or equipment damage.

21. If present, remove the rear seismic anchoring bracket from the UPS and remove the seismic anchors from the floor. Save for reinstallation. See Install the Seismic Anchoring (Option), page 38 for details.

22. **For transport over longer distances or in conditions that are not suitable for the casters of the UPS**:

⚠ WARNING

TIPPING HAZARD

For transport over longer distances or in conditions that are not suitable for the casters of the UPS, ensure:

- that personnel performing the transport have necessary skills and have received adequate training;
- to use appropriate tools to safely lift and transport the UPS;
- to protect the product against damage by using appropriate protection (like wrapping or packaging).

Failure to follow these instructions can result in death, serious injury, or equipment damage.

Transportation requirements:

- Mount the UPS in a vertical position in the center of a suitable pallet with minimum pallet dimensions: 684 mm x 1040 mm (27 in x 41 in)). The pallet must be suitable for the weight of the UPS (230 kg (507 lbs) with no power module and two bottom rows of battery modules present inside the UPS).
- Use appropriate means of fixation to mount the UPS to the pallet.
- The original shipping pallet in combination with the original transportation brackets can be reused, if in undamaged condition.

⚠ DANGER

TIPPING HAZARD

- The UPS must be appropriately fixed to the pallet immediately after being placed on the pallet.
- The fixation hardware must be strong enough to withstand vibrations and shocks during loading, transport, and unloading.

Failure to follow these instructions will result in death or serious injury.

⚠ WARNING

UNEXPECTED EQUIPMENT BEHAVIOR

Do not lift the UPS with a forklift/pallet truck directly on the frame as it may bend or damage the frame.

Failure to follow these instructions can result in death, serious injury, or equipment damage.

23. Perform one of the following:
    - Decommission the UPS, OR
    - Move the UPS to a new location to install it.

24. **Only for installing the UPS in a new location**: Follow the installation manual to install UPS in the new location. See Installation Procedure, page 37 for installation overview. Startup must only be performed by Schneider Electric.

DANGER

HAZARD OF ELECTRIC SHOCK, EXPLOSION, OR ARC FLASH

Startup must only be performed by Schneider Electric.

Failure to follow these instructions will result in death or serious injury.

Schneider Electric
35 rue Joseph Monier
92500 Rueil Malmaison
France

+ 33 (0) 1 41 29 70 00

As standards, specifications, and design change from time to time, please ask for confirmation of the information given in this publication.

© 2019 – 2024 Schneider Electric. All rights reserved.

990-91260E-001