PDU

400-500 kVA

Installation and Operation

Latest updates are available on the Schneider Electric website
12/2023

www.se.com

Legal Information

Table of Contents

Important Safety Instructions — SAVE THESE INSTRUCTIONS

Read these instructions carefully and look at the equipment to become familiar with it before trying to install, operate, service or maintain it. The following safety messages may appear throughout this manual or on the equipment to warn of potential hazards or to call attention to information that clarifies or simplifies a procedure.

The addition of this symbol to a “Danger” or “Warning” safety message indicates that an electrical hazard exists which will result in personal injury if the instructions are not followed.

This is the safety alert symbol. It is used to alert you to potential personal injury hazards. Obey all safety messages with this symbol to avoid possible injury or death.

⚠ DANGER

DANGER indicates a hazardous situation which, if not avoided, **will result in** death or serious injury.

Failure to follow these instructions will result in death or serious injury.

⚠ WARNING

WARNING indicates a hazardous situation which, if not avoided, **could result in** death or serious injury.

Failure to follow these instructions can result in death, serious injury, or equipment damage.

⚠ CAUTION

CAUTION indicates a hazardous situation which, if not avoided, **could result in** minor or moderate injury.

Failure to follow these instructions can result in injury or equipment damage.

NOTICE

NOTICE is used to address practices not related to physical injury. The safety alert symbol shall not be used with this type of safety message.

Failure to follow these instructions can result in equipment damage.

Please Note

Electrical equipment should only be installed, operated, serviced, and maintained by qualified personnel. No responsibility is assumed by Schneider Electric for any consequences arising out of the use of this material.

A qualified person is one who has skills and knowledge related to the construction, installation, and operation of electrical equipment and has received safety training to recognize and avoid the hazards involved.

FCC Statement

NOTE: This equipment has been tested and found to comply with the limits for a Class A digital device, pursuant to Part 15 of the FCC Rules. These limits are designed to provide reasonable protection against harmful interference when the equipment is operated in a commercial environment. This equipment generates, uses, and can radiate radio frequency energy and, if not installed and used in accordance with the instruction manual, may cause harmful interference to radio communications. Operation of this equipment in a residential area is likely to cause harmful interference in which case the user will be required to correct the interference at his own expense.

Any changes or modifications not expressly approved by the party responsible for compliance could void the user's authority to operate the equipment.

Safety Precautions

⚠ DANGER

HAZARD OF ELECTRIC SHOCK, EXPLOSION, OR ARC FLASH

All safety instructions in this document must be read, understood and followed.

Failure to follow these instructions will result in death or serious injury.

⚠ DANGER

HAZARD OF ELECTRIC SHOCK, EXPLOSION, OR ARC FLASH

Read all instructions in this manual before installing or working on this product.

Failure to follow these instructions will result in death or serious injury.

⚠ DANGER

HAZARD OF ELECTRIC SHOCK, EXPLOSION, OR ARC FLASH

Do not install the product until all construction work has been completed and the installation room has been cleaned.

Failure to follow these instructions will result in death or serious injury.

⚠ DANGER

HAZARD OF ELECTRIC SHOCK, EXPLOSION, OR ARC FLASH

- The product must be installed according to the specifications and requirements as defined by Schneider Electric. It concerns in particular the external and internal protections (upstream breakers, battery breakers, cabling, etc.) and environmental requirements. No responsibility is assumed by Schneider Electric if these requirements are not respected.
- After the product has been electrically wired, do not start up the system. Start-up must only be performed by Schneider Electric.

Failure to follow these instructions will result in death or serious injury.

⚠ DANGER

HAZARD OF ELECTRIC SHOCK, EXPLOSION, OR ARC FLASH

The product must be installed according to local and national regulations. Install the product according to:

- NEC NFPA 70, **or**
- Canadian Electrical Code (C22.1, Part 1)

depending on which one of the standards apply in your local area.

Failure to follow these instructions will result in death or serious injury.

⚠ DANGER

HAZARD OF ELECTRIC SHOCK, EXPLOSION, OR ARC FLASH

- Install the product in a temperature controlled indoor environment free of conductive contaminants and humidity.
- Install the product on a non-flammable, level and solid surface (e.g. concrete) that can support the weight of the system.

Failure to follow these instructions will result in death or serious injury.

⚠ DANGER

HAZARD OF ELECTRIC SHOCK, EXPLOSION, OR ARC FLASH

The product is not designed for and must therefore not be installed in the following unusual operating environments:

- Damaging fumes
- Explosive mixtures of dust or gases, corrosive gases, or conductive or radiant heat from other sources
- Moisture, abrasive dust, steam or in an excessively damp environment
- Fungus, insects, vermin
- Salt-laden air or contaminated cooling refrigerant
- Pollution degree higher than 2 according to IEC 60664-1
- Exposure to abnormal vibrations, shocks, and tilting
- Exposure to direct sunlight, heat sources, or strong electromagnetic fields

Failure to follow these instructions will result in death or serious injury.

⚠ DANGER

HAZARD OF ELECTRIC SHOCK, EXPLOSION, OR ARC FLASH

Do not drill or cut holes for cables or conduits with the gland plates installed and do not drill or cut holes in close proximity to the product.

Failure to follow these instructions will result in death or serious injury.

⚠ WARNING

HAZARD OF ARC FLASH

Do not make mechanical changes to the product (including removal of cabinet parts or drilling/cutting of holes) that are not described in this manual.

Failure to follow these instructions can result in death, serious injury, or equipment damage.

NOTICE

RISK OF OVERHEATING

Respect the space requirements around the product and do not cover the ventilation openings when the product is in operation.

Failure to follow these instructions can result in equipment damage.

Electrical Safety

⚠ DANGER

HAZARD OF ELECTRIC SHOCK, EXPLOSION OR ARC FLASH

- Electrical equipment must be installed, operated, serviced, and maintained only by qualified personnel.
- Apply appropriate personal protective equipment (PPE) and follow safe electrical work practices.
- Turn off all power supplying the PDU system before working on or inside the equipment.
- Before working on the PDU system, check for hazardous voltage between all terminals including the protective earth.
- A disconnection device (e.g. disconnection circuit breaker or switch) must be installed to enable isolation of the system from upstream power sources in accordance with local regulations. This disconnection device must be easily accessible and visible.
- The PDU must be properly earthed/grounded and due to a high leakage current, the earthing/grounding conductor must be connected first.

Failure to follow these instructions will result in death or serious injury.

Receiving

External Inspection

When the shipment arrives, inspect the shipping materials for any signs of damage or mishandling. Check tilt and impact indicators. Do not attempt to install the system if any damage is apparent. If any damage is noted, contact Schneider Electric customer support and file a damage claim with the shipping agency within 24 hours of receipt.

Compare the components of the shipment with the bill of lading. Report any missing items to the carrier and to Schneider Electric customer support immediately.

Verify that labelled units match the order confirmation.

Storage

If the equipment is to be stored prior to installation, it should be stored in a cool, dry, well-ventilated location that is protected against rain, splashing water, chemical agents, etc. The equipment should be covered with a tarpaulin or plastic wrapper to protect it against dust, dirt, paint, or other foreign materials.

Installation

Specifications

Input Specifications

Commercial reference	PMM400-ALAX PMM400-ALA PMM400-CUB	PMM500-ALAX PMM500-ALA PMM500-CUB
kVA	**400**	**500**
Connections	3-wire (3P + PE)	
Input voltage (V)	480	
Input current (A)	481	601
Frequency (Hz)	60	
Maximum short circuit rating	65 kA RMS symmetrical at 480 V	

Output Specifications

Commercial reference	PMM400-ALAX PMM400-ALA	PMM400-CUB	PMM500-ALAX PMM500-ALA	PMM500-CUB
kVA	**400**		**500**	
Connections	4-wire (3P + N + PE)			
Output voltage (V)	400 or 208	208	400 or 208 415 or 216	208
Output current (A)	1110 at 208 V 577 at 400 V	1110	1388 at 208 V 1336 at 216 V 722 at 400 V 696 at 415 V	1388
Frequency (Hz)	60			
Output current protection (A)	250-600			
Branch output (A)	250, 400, 600			

Recommended Upstream Protection

For PDU systems with a main input switch (MIS), an input breaker must be installed upstream of the PDU.

Commercial reference	PMM400-ALAX	PMM400-ALA	PMM400-CUB	PMM500-ALAX	PMM500-ALA	PMM500-CUB
kVA	**400**			**500**		
Upstream OCPD	PJX36080UXXX (Ir=504A max)			PJX36080UXXX (Ir=640A max)		

Recommended Cables Sizes

⚠⚠DANGER

HAZARD OF ELECTRIC SHOCK, EXPLOSION, OR ARC FLASH

All wiring must comply with all applicable national and/or electrical codes.

- All field wiring connections to be made with UL listed wire connectors suitable for the size and type of wire involved.
- Conduit openings to be installed only in designated terminal compartment area.
- Equipment must be field grounded using equipment grounding conductors (EGC) sized in accordance with NEC based on the main input device (MID) maximum rating.

Failure to follow these instructions will result in death or serious injury.

Input and Output

Device	**Main input device (MID)**		**Main output device (MOD)**	
Type	3-pole, switch (MIS) for 400/500 kVA	3-pole, breaker (MIB) for 400/500 kVA	3-pole, breaker (MOB) for 400 kVA	3-pole, breaker (MOB) for 500 kVA
Rating	800 A, 600 V	800 A, 600 V at 80%	1200 A, 600 V at 100%	1600 A, 600 V at 100%
Brand	Square D by Schneider Electric			
Model	PJF36000S80	PJF36080U33A	RJF36120CU33A	RJF36160CU33A
(Standard) Mechanical terminal wire range (aluminum/copper)	3 x 3/0 AWG to 500 kcmil		NA	NA
Mechanical wire bending space	363.22 mm (14.3 in)		NA	NA
(Option) Compression terminal wire range (aluminum/copper)	2 x 250 kcmil, NEMA 2 hole (1/2 inch bolt) - wire bending space: 279.4 mm (11 in) 2 x 350 kcmil NEMA 2 hole (1/2 inch bolt) - wire bending space: 269.24 mm (10.6 in) 2 x 500 kcmil NEMA 2 hole (3/8 inch bolt) - wire bending space: 279.4 mm (11 in)		NA	NA

Branch Breaker

Rating	**Branch breaker**	**Breaking capacity**		**Terminal wire range (aluminum/ copper)**	**Wire bending space**
		240 V	**480 V**		
250 A at 80%	JDA36250U33X	25 kA	18 kA	3/0 AWG to 350 kcmil	487.68 mm (19.2 in)
250 A at 100%[1]	JDA36250CU33X				
250 A at 80%	JGA36250U33X	65 kA	35 kA		
250 A at 100%[1]	JGA36250CU33X				
400 A at 100%	LGA36400CU33X			2 x 3/0 AWG to 500 kcmil	386.08 mm (15.2 in)
400 A at 80%	LDA36400U33X				
400 A at 80%	LDA36400U33X	25 kA	18 kA		
400 A at 100%	LDA36400CU33X				
600 A at 80%	LGA36600U33X	65 kA	35 kA		
600 A at 80%	LDA36600U33X	25 kA	18 kA		

1. Copper lugs for use with copper cables only.

Conduit Area

Cable entry system	Conduit area mm (in)
Top cable entry incoming cables	321 x 212 (12.64 x 8.34)
Top cable entry outgoing cables (distribution)	200 x 957 (7.8 x 37.6)
Bottom cable entry incoming cables	127 x 280 (11 x 5)
Bottom cable entry outgoing cables (distribution)	181 x 934 (7.1 x 36.78)

Bottom Cable Entry System

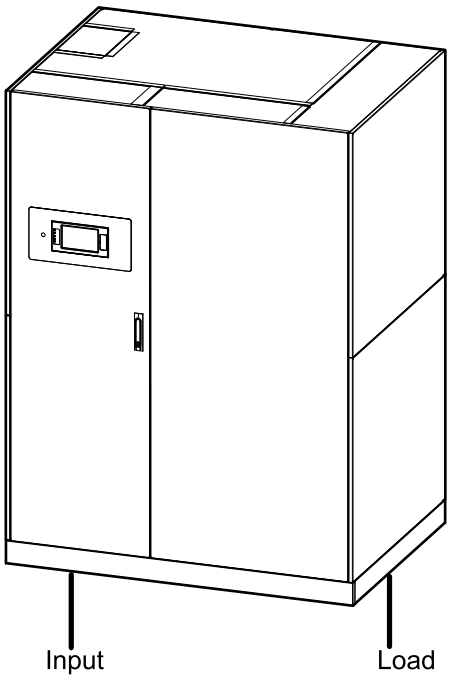

Top Cable Entry System

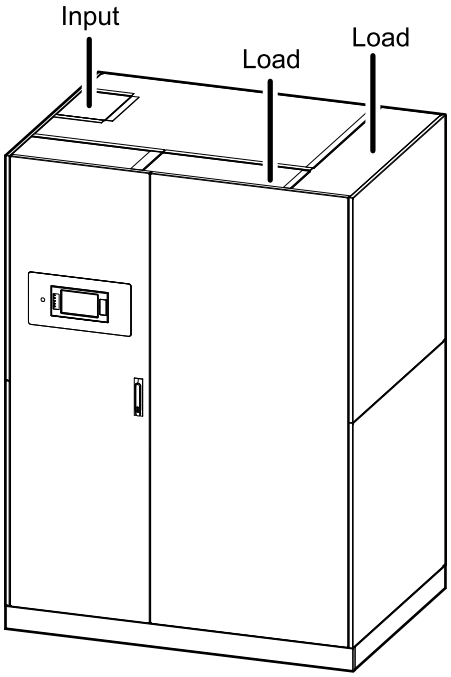

Clearance

NOTE: Clearance dimensions are published for airflow and service access only. Consult with the local safety codes and standards for additional requirements in your local area.

NOTE: 914 mm (36 in) left side clearance is only required for non-routine transformer service such as transformer tap changes and main current transformer replacement. For routine operation and maintenance of the PDU, there is no side clearance required.

Front View of the PDU

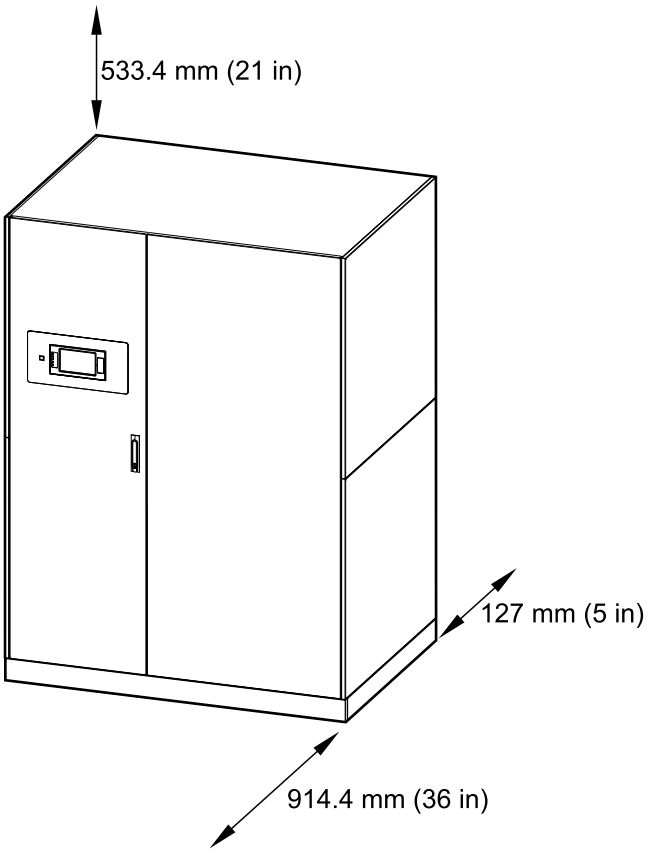

Weights and Dimensions

Commercial reference	Weight kg (lbs)	Height mm (in)	Width mm (in)	Depth mm (in)
PMM400-ALAX PMM400-ALA	2118.28 (4670)	2043.7 (80.46)	1524 (60)	1092.2 (43)
PMM400-CUB	2168.17 (4780)			
PMM500-ALAX PMM500-ALA	2218.17 (4890)			
PMM500-CUB	2268 (5000)			

Environment

	Operating	Storage
Temperature	-10 °C to 40 °C (14 °F to 104 °F)	-25 °C to 55 °C (-13 °F to 131 °F)
Relative humidity	10 to 70% non-condensing	10 to 90% non-condensing
Elevation	0 m to 2011 m (0 feet to 6600 feet) above sea level	152 m below to 7620 m above sea level (500 feet below to 25,000 feet above sea level)
Audible noise one meter (three feet) from unit	400 kVA: 60 dB 500 kVA: 60 dB	
Protection class	NEMA type 1, solid roof, external doors with inner dead front panels	
Cooling	Front and rear ventilation (top and bottom)	
Color	RAL 9003 white	
Accessibility	Front access for: • Display • Fuse panel • Communication and monitoring • Adding/replacing branch breakers	

Heat Dissipation

Commercial reference	**PMM400-ALAX** **PMM400-ALA**	**PMM400-CUB**	**PMM500-ALAX** **PMM500-ALA**	**PMM500-CUB**
kVA	**400**		**500**	
Heat dissipation in BTU/hr	16018	14592	20616	18450

Compliance

Safety	UL 60950-1, 2nd Edition (Information Technology Equipment) CSA C22.2 No. 60950-1-07, 2nd Edition (Information Technology Equipment) UL 891, 11th Edition (Switchboard) C22.2 No. 244-05, First Edition (Switchboard)
EMC	FCC Part 15, Subpart B, Class A
Marking	cULus
Performance	Transformer DOE2016 / NRCan
Seismic preapproval	OSHPD

One Line Diagrams

PDU with Main Input Breaker MIB

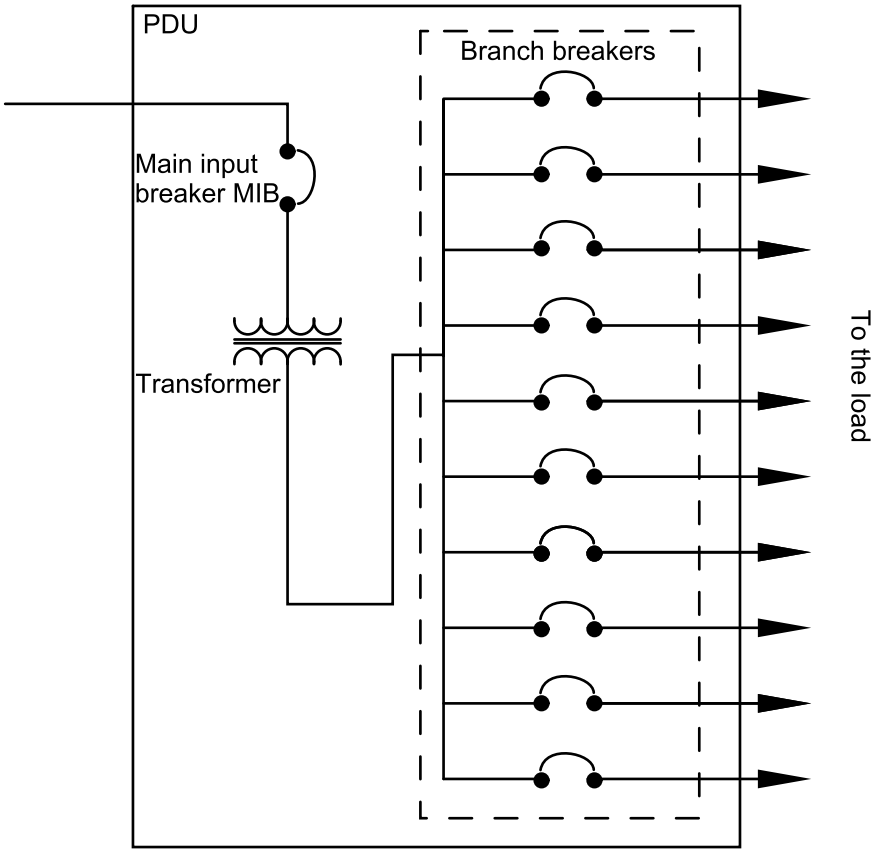

PDU with Main Input Breaker MIB and Main Output Breaker MOB

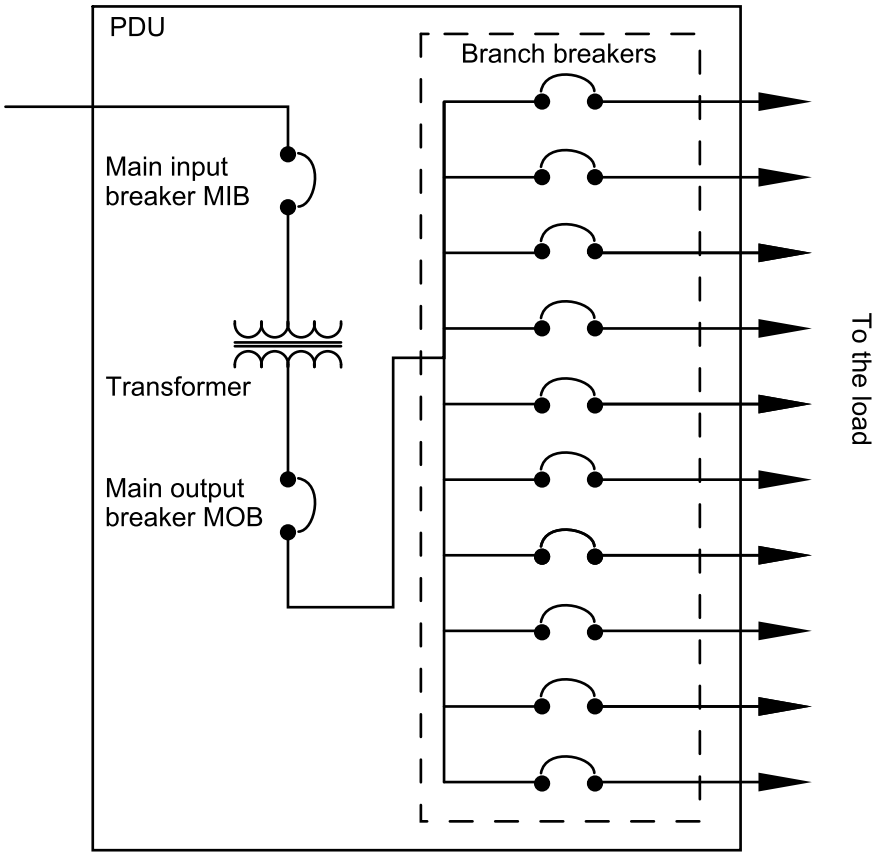

PDU with Main Input Switch MIS

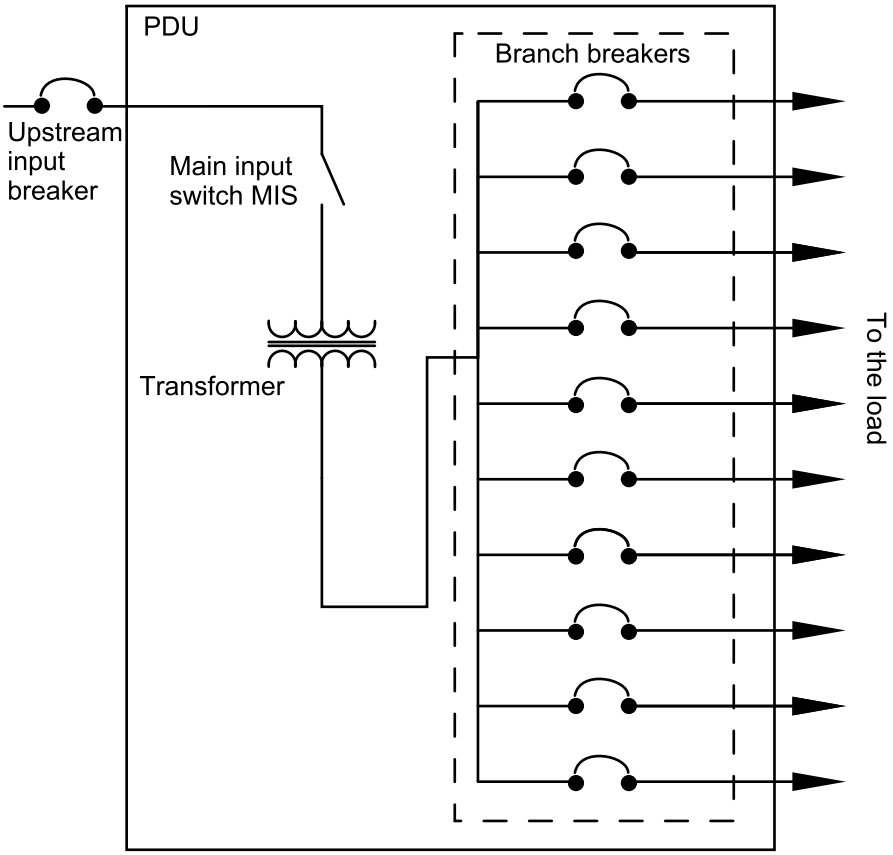

PDU with Main Input Switch MIS and Main Output Breaker MOB

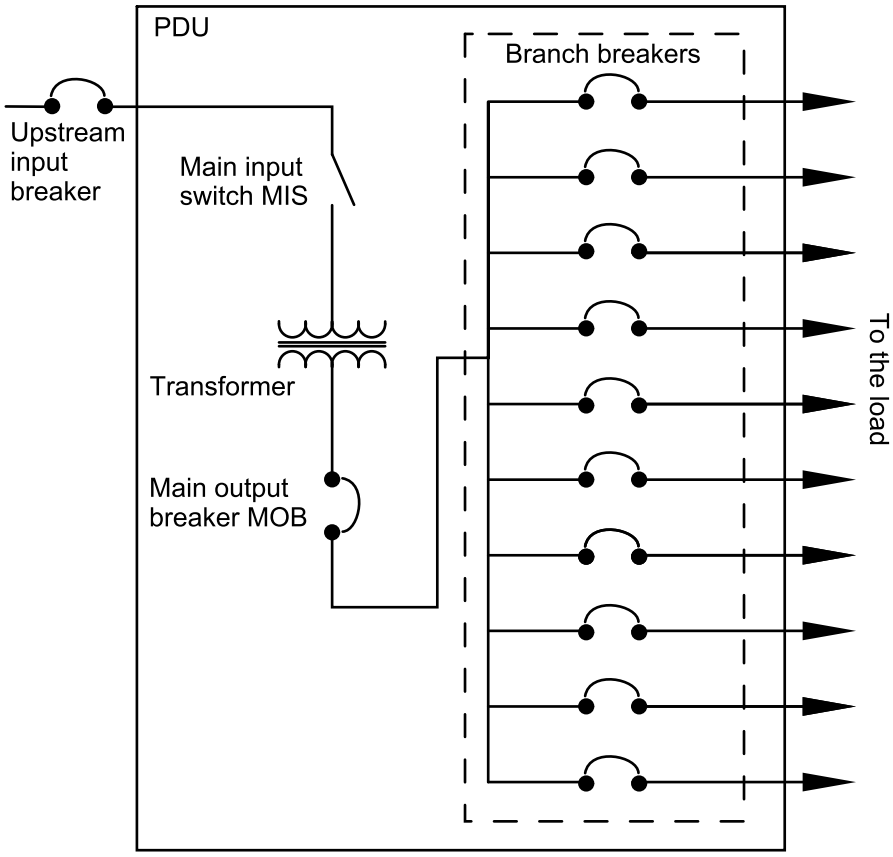

Installation Procedure

Bottom Cable Entry System

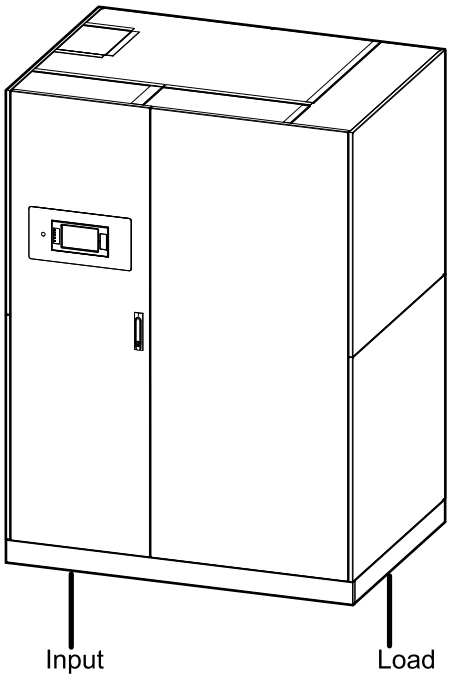

Top Cable Entry System

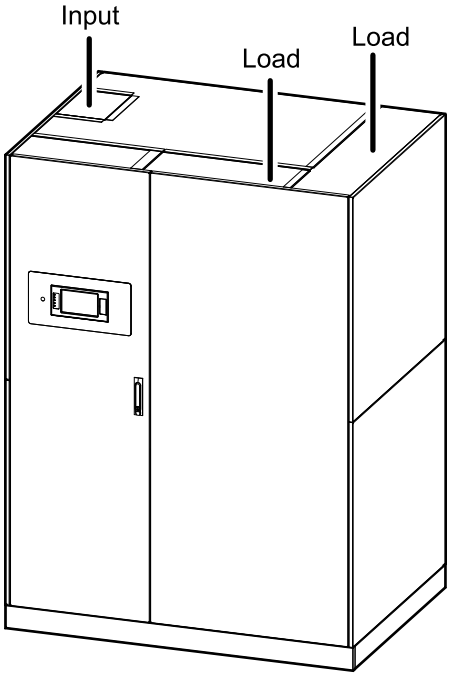

1. Move the PDU to the final installation location with a forklift or hand pallet truck. Lift the PDU front to back or back to front through the openings in the lower part of the PDU.
2. Install the Seismic Anchoring (Option), page 19.
3. Follow one of the procedures:
   - Prepare the PDU for Cables in Bottom Entry System, page 21, or
   - Prepare the PDU for Cables in Top Entry System, page 22.
4. Connect the Input Power Cables, page 23.
5. Connect the Load to the Branch Breakers, page 24.
6. Connect the Modbus/Ethernet Cables, page 25.
7. Final Installation, page 27.

Install the Seismic Anchoring (Option)

Use the optional seismic kit for this procedure.

Overview of Anchoring Holes

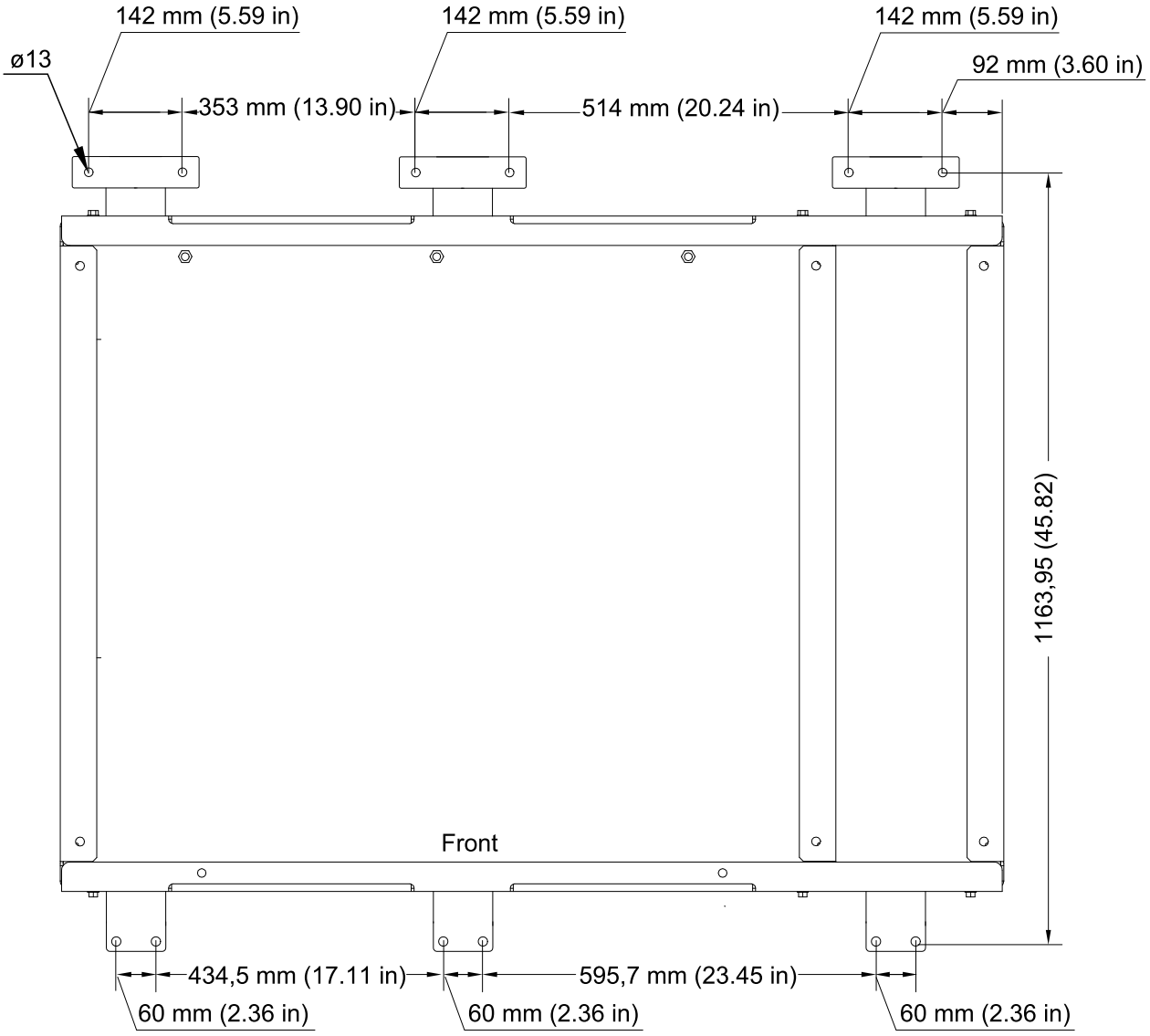

1. Drill holes for anchoring in the floor according to overview.

2. Mount the three rear anchors to the floor with M12 bolts (not provided).

Rear View of the PDU

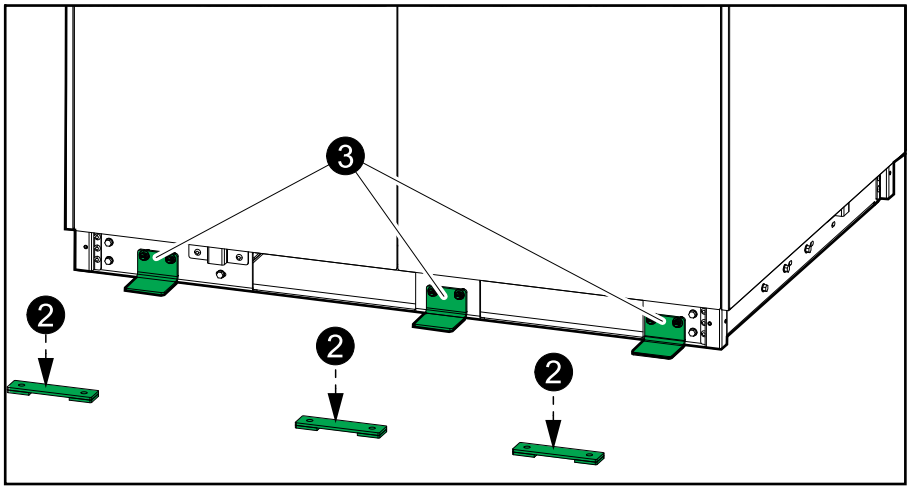

3. Install the rear anchoring brackets on the PDU.
4. Push the PDU into position so the rear anchoring brackets connect to the rear anchors.
5. Install the front anchoring brackets on the PDU and mount to the floor with M10 expansion bolts (not supplied).

Front View of the PDU

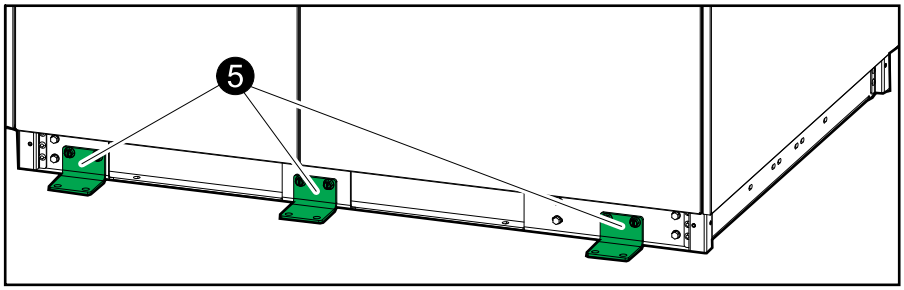

Prepare the PDU for Cables in Bottom Entry System

⚠ DANGER

HAZARD OF ELECTRIC SHOCK, EXPLOSION, OR ARC FLASH

Do not drill or punch holes for cables or conduits with the gland plate installed and do not drill or punch holes in close proximity to the PDU.

Failure to follow these instructions will result in death or serious injury.

1. Remove the right side panels from the PDU for better access, if possible.
2. Remove the indicated front plates from the PDU.
3. Remove the gland plate in the bottom left side of the PDU.

Front View of the PDU

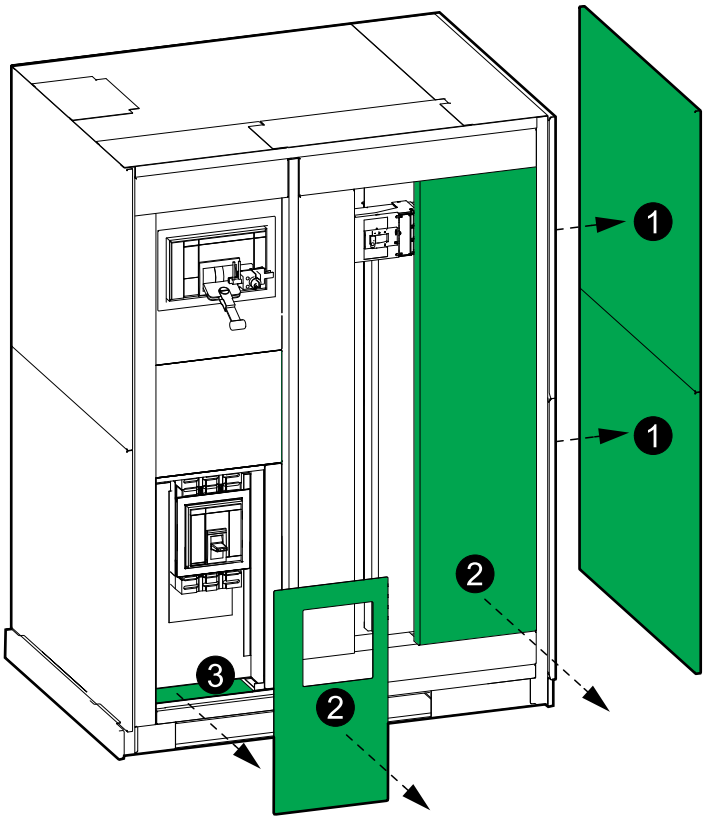

4. Drill/punch holes for power cables/conduits in the gland plate. Conduits are not provided.
5. Reinstall the gland plate in the bottom left side of the PDU.
6. Lockout/Tagout the main input breaker MIB/main input switch MIS in the OFF (open) position.

Prepare the PDU for Cables in Top Entry System

⚠ DANGER

HAZARD OF ELECTRIC SHOCK, EXPLOSION, OR ARC FLASH

Do not drill or punch holes for cables or conduits with the gland plate installed and do not drill or punch holes in close proximity to the PDU.

Failure to follow these instructions will result in death or serious injury.

1. Remove the right side panels from the PDU for better access, if possible.
2. Remove the indicated front plates.
3. Remove the gland plates from the top of the PDU.

Front View of the PDU

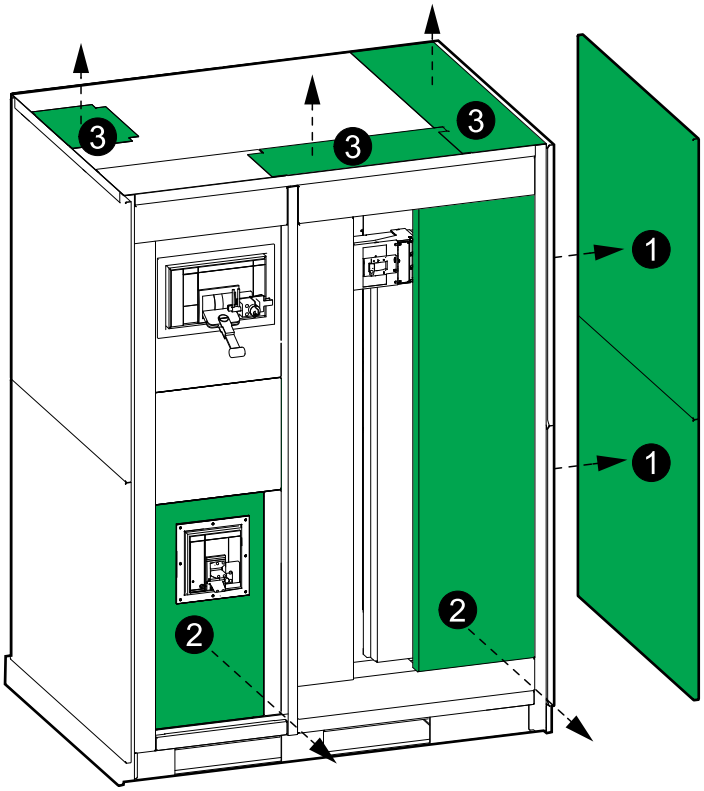

4. Drill/punch holes for power cables/conduits in the gland plates. Conduits are not provided.
5. Reinstall the gland plates in the top of the PDU.
6. Lockout/Tagout the main input breaker MIB/main input switch MIS in the OFF (open) position.

Connect the Input Power Cables

1. Route the equipment grounding conductor/PE cables through the top or bottom left side of the PDU and connect to the PE busbar.
2. Route the input cables through the top or bottom left side of the PDU and connect to the main input breaker MIB/main input switch MIS.

Front View of the PDU

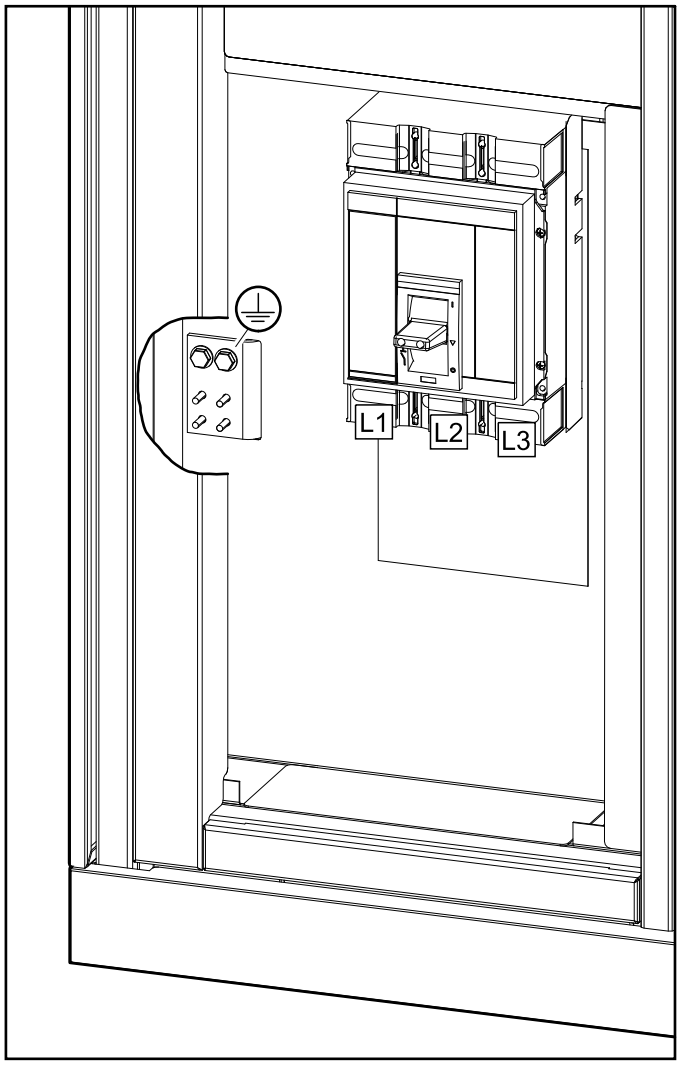

Connect the Load to the Branch Breakers

1. Route the power cables from the load through the top or bottom right side of the PDU. Bottom cable entry is shown in illustration.
2. For each power cable set:
   a. Connect the N cable to the N busbar.
   b. Connect the equipment grounding conductor/PE cable to the PE busbar.
   c. Route the power cables through the provided current transformers for the branch breaker. Check that the direction of the power cables matches the labels on the current transformers. The signal cables for the current transformers are preinstalled by the factory.
   d. Connect the power cables to the branch breaker.

Front View of the PDU

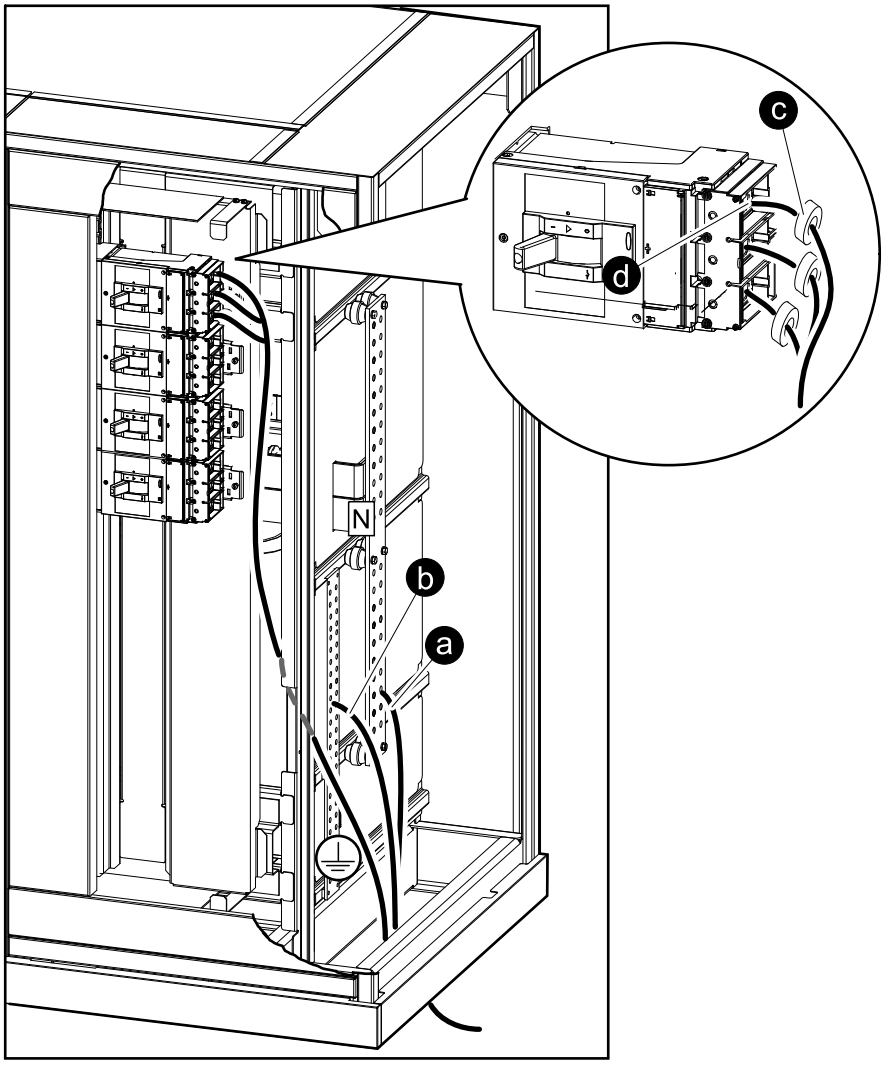

Connect the Modbus/Ethernet Cables

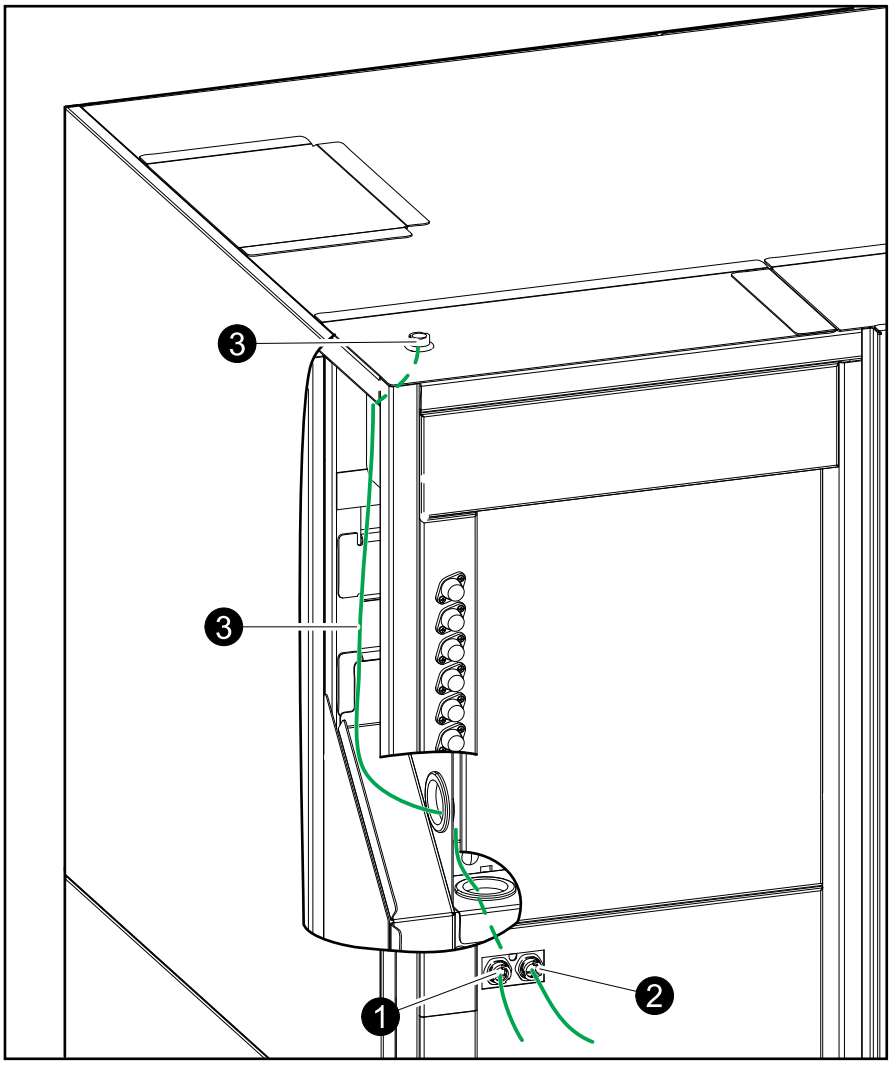

1. Connect an Ethernet cable with RJ45 plug to the Ethernet port.

2. Connect the Modbus cable with RJ45 plug to the Modbus port on the PDU.
   - 2-wire or 4-wire shielded twisted pair cables must be used for Modbus connections. Use a cable for Modbus serial link (RJ45 to RJ45 or RJ45 to free wires depending on the Modbus controller characteristics).
   - The Modbus port is optically isolated. The Modbus port's ground is not connected to any other ground.
   - Install 150 Ohm termination resistors at each end of each bus if the buses are very long and operate at high data rates. Busses under 610 meters (2000 feet) at 9600 baud or under 305 meters (1000 feet) at 19.200 baud should not require termination resistors.
   - Install 400–650 Ohm bias resistors at or inside the system controller; one from D0 to ground and one from D1 to +5 VDC.

Example: Modbus 4–Wire on RJ45 Connector

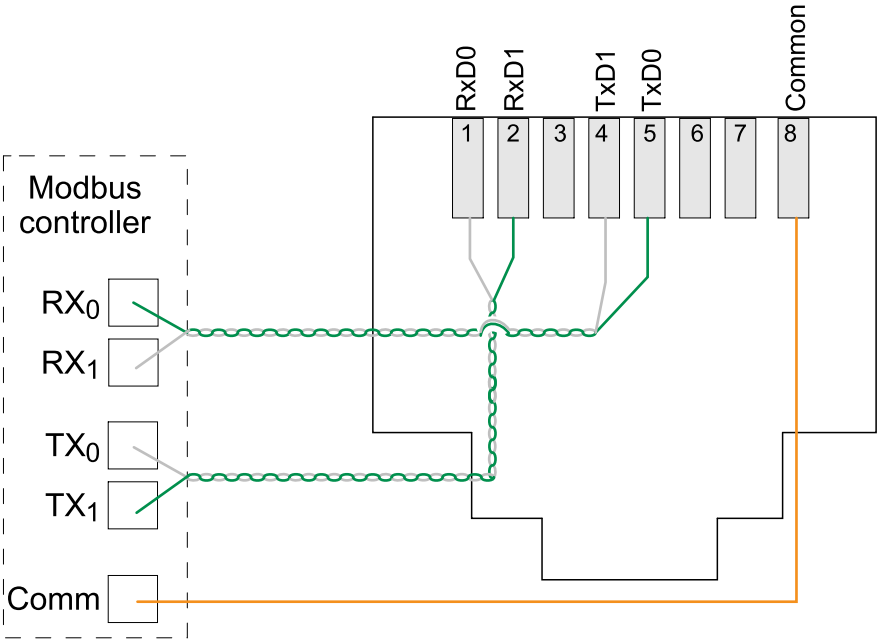

3. If needed, use the pass-through communication port on the roof of the PDU as an extension of either the Modbus or the Ethernet port. Use a standard UTP straight-through cable with RJ45 plugs, connect one end to the intended port on the PDU, and the other end to the port on the roof (from the inside). Then, connect the external Modbus with RJ45 plug or Ethernet cable with RJ45 plug to the extension port on top of the PDU.

4. If more than one PDU must be connected to the Modbus controller, use an RJ45 Modbus hub or splitter block.

   NOTE: Wiring should be done in accordance with local wiring codes. Route signal cables separately from power cables to reduce noise.

Final Installation

1. Reinstall all removed plates in the PDU.
2. Reinstall the side panels on the PDU.
3. Install the kick plates on all sides of the PDU.

Front View of the PDU

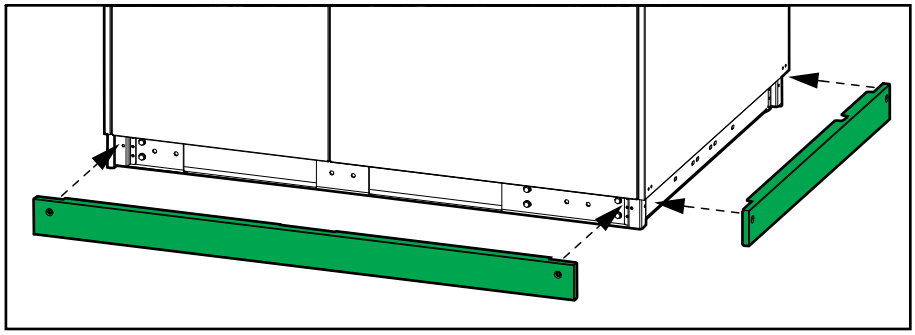

Operation

User Interface

Front View of the PDU (Display Model 1)

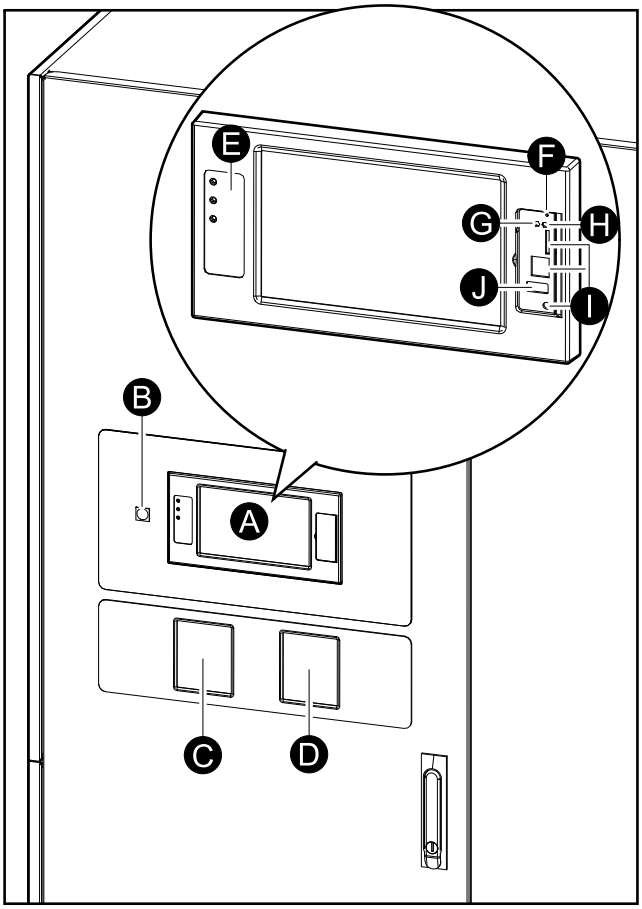

Front View of the PDU (Display Model 1)

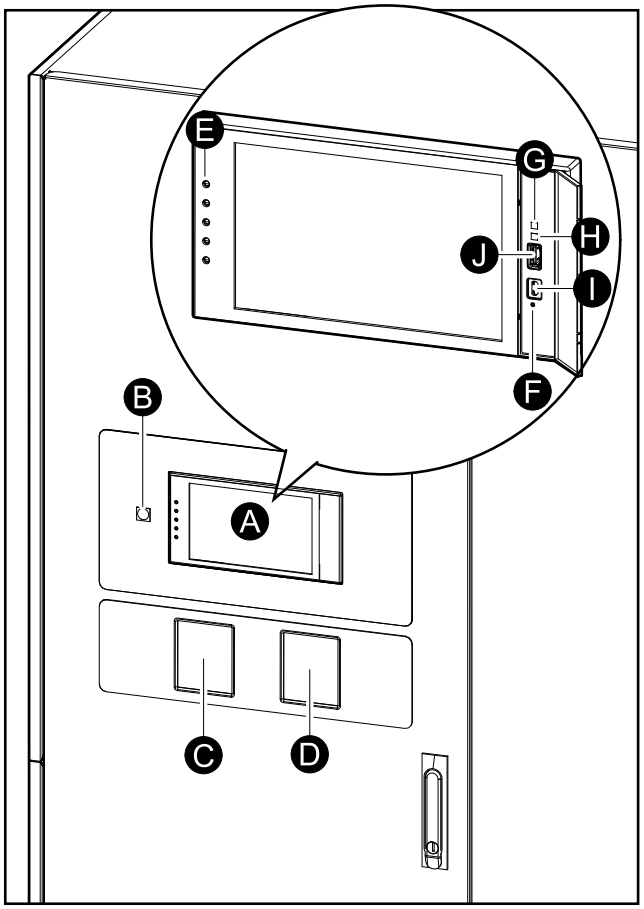

A. PDU display[2]
B. EPO (emergency power off) button (option)
C. Power meter (option)
D. Power meter (option)
E. Status LEDs
F. Display reset button
G. Network connection LED:
   - Solid green: The system has valid TCP/IP settings.
     See Configure the Network, page 40.
   - Flashing green: The system does not have valid TCP/IP settings.
   - Solid orange: The display is inoperable. Contact Schneider Electric.
   - Flashing orange: The system is making BOOTP requests.
     See Configure the Network, page 40.
   - Alternately flashing green and orange: If the LED is alternately flashing slowly, the system is making DHCP requests.
     See Configure the Network, page 40.

2. Note that the PDU comes with one of the two display models.

If the LED is alternately flashing rapidly, the system is starting up.

- Off: The display is not receiving input power or the display is inoperable.

H. LED for indication of network connection type:
   - Solid green: The system is connected to a network operating at 10 Megabits per second (Mbps).
   - Flashing green: The system is receiving or transmitting data packets at 10 Megabits per second (Mbps).
   - Solid orange: The system is connected to a network operating at 100 Megabits per second (Mbps).
   - Flashing orange: The system is receiving or transmitting data packets at 100 Megabits per second (Mbps).
   - Off: One or more of the following exists: The display is not receiving input power, the cable that connects the system to the network is disconnected, the device that connects the system to the network is turned off, or the display is inoperable. Check the connections and if the LED remains off, contact Schneider Electric.

I. Slots reserved for service.

J. USB port.

Overview of Status LEDs

	Power LED: The PDU is powered when the LED is illuminated. PDU firmware is being updated when the LED is flashing.
	Check log LED: When the LED is illuminated, a new PDU entry has been made in the event log.
	Alarm LED: When the LED is illuminated, there is an alarm condition in the PDU system.

Power Meter Operation

Follow the documentation delivered with the specific power meter for operation, maintenance, and troubleshooting.

Display Symbols

Symbol	Description
	The locked home button appears when the system is locked by a password protection. Tap this button to go to the home screen of the display.
	The unlocked home button appears when the system has been unlocked using the password. Tap this button to go to the home screen of the display.
OK	Tap the OK button to confirm your selections and exit the current screen.
ESC	Tap the ESC button to cancel your changes and exit the current screen.
	Tap the filter button to set up the filters for your logs.
	Tap the recycle bin button to clear the log.

Menu Tree

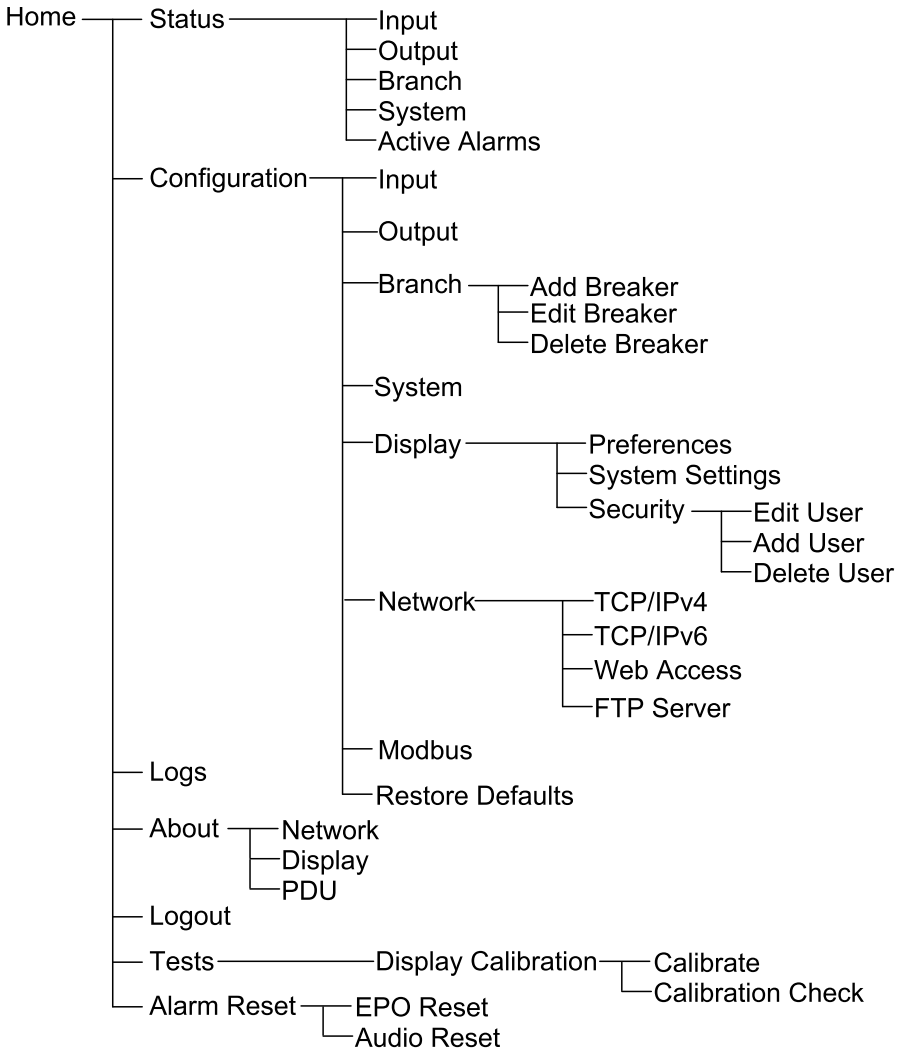
Home
Status
Input
Output
Branch
System
Active Alarms
Configuration
Input
Output
Branch
Add Breaker
Edit Breaker
Delete Breaker
System
Display
Preferences
System Settings
Security
Edit User
Add User
Delete User
Network
TCP/IPv4
TCP/IPv6
Web Access
FTP Server
Modbus
Restore Defaults
Logs
About
Network
Display
PDU
Logout
Tests
Display Calibration
Calibrate
Calibration Check
Alarm Reset
EPO Reset
Audio Reset

Configuration

Configure the Input Parameters

1. From the home screen on the display select **Configuration > Input**.
2. Enable the **Breaker Open Alarm**, if needed.

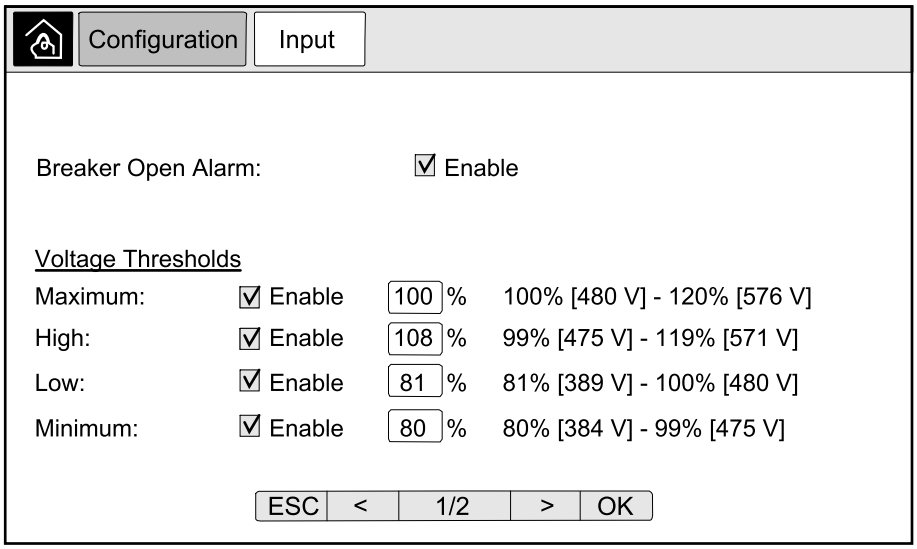

3. Set the **Voltage Thresholds** for: **Maximum**, **High**, **Low**, and **Minimum** by tapping **Enable** and setting the percentage.
4. Tap the **>** symbol to go to the next page.
5. Set the **Current Thresholds** for: **Maximum**, **High**, **Low**, and **Minimum** by tapping **Enable** and setting the percentage.

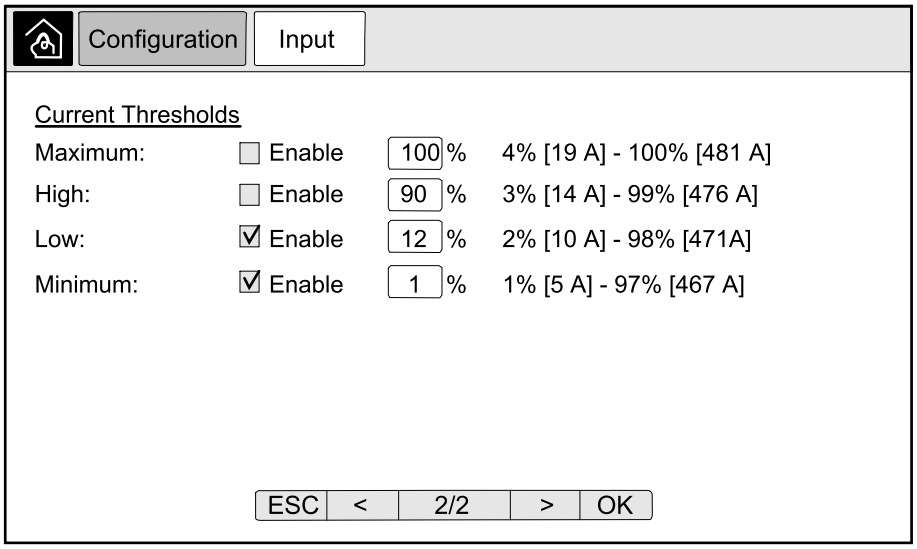

6. Tap **OK** to save your settings.

Configure the Output Parameters

1. From the home screen on the display select **Configuration > Output**.
2. Enable the **Breaker Open Alarm**, if needed.

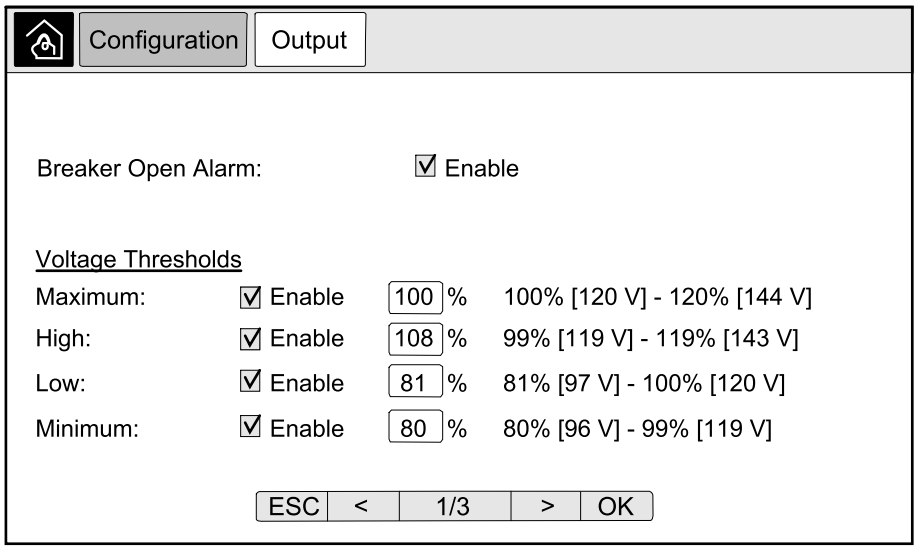

3. Set the **Voltage Thresholds** for: **Maximum**, **High**, **Low**, and **Minimum** by tapping **Enable** and setting the percentage.
4. Tap the **>** symbol to go to the next page.
5. Set the **Current Thresholds** for: **Maximum**, **High**, **Low**, and **Minimum** by tapping **Enable** and setting the percentage.

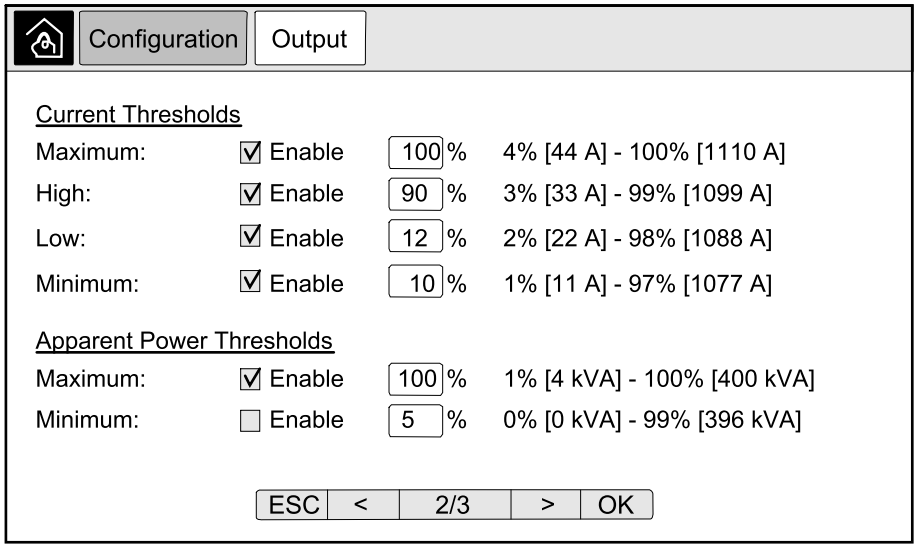

6. Set the **Apparent Power Thresholds** for: **Maximum** and **Minimum** by tapping **Enable** and setting the percentage.
7. Tap the **>** symbol to go to the next page.

8. Set the **Misc Thresholds** for: **Over Active Power**, **PF Deviation**, **Phase Loss**, and **Frequency Deviation** by tapping **Enable** and setting the percentage or choosing from the drop-down list.

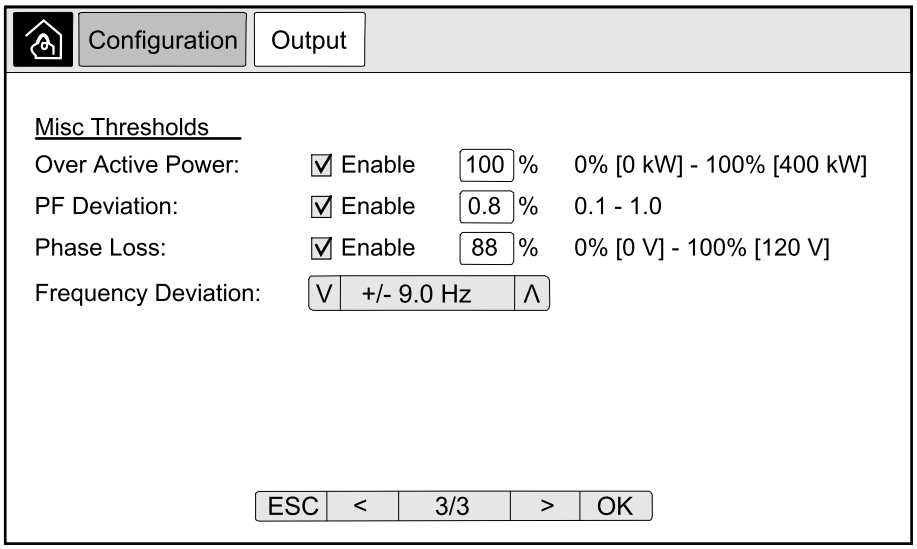

9. Tap **OK** to save your settings.

Configure a Branch Breaker

1. From the home screen on the display select **Configuration > Branch > Add Breaker**.
2. Configure the branch breaker parameters:
   a. Set the **Position** to: **TOP**/**BOTTOM** and type the position number.

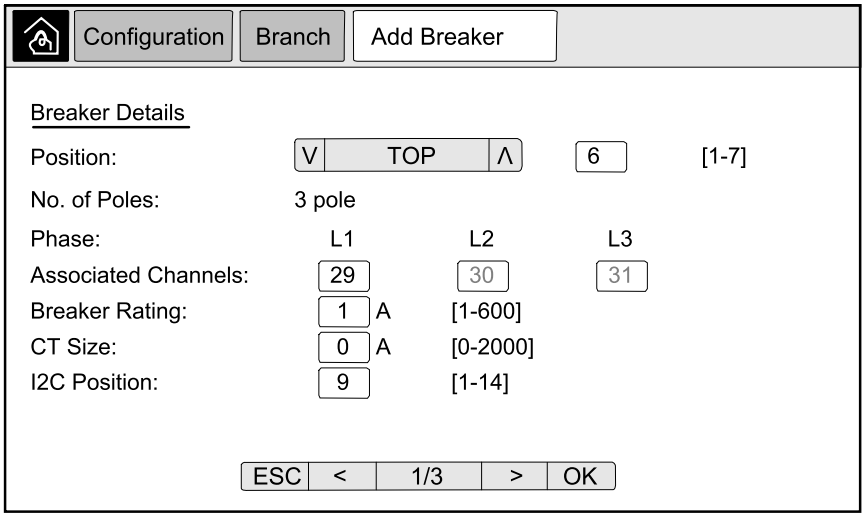

The positions are assigned taking the center as a reference:

Branch Breaker Positions

TOP 7
TOP X
TOP 2
TOP 1
Center
BOTTOM 1
BOTTOM 2

Branch Breaker Positions (Continued)

BOTTOM X
BOTTOM 7

b. Set the **Associated Channels** for L1. L2 and L3 will be populated automatically.

c. Set the **Breaker Rating** current (1–600).

d. Set the **CT Size** (0–2000).

e. Set the **I2C Position** (1–14).

f. Tap the **>** symbol to go to the next page to provide optional settings, or tap **OK** to use default settings for the next two pages.

g. Set the **Load Identifier** for the breaker.

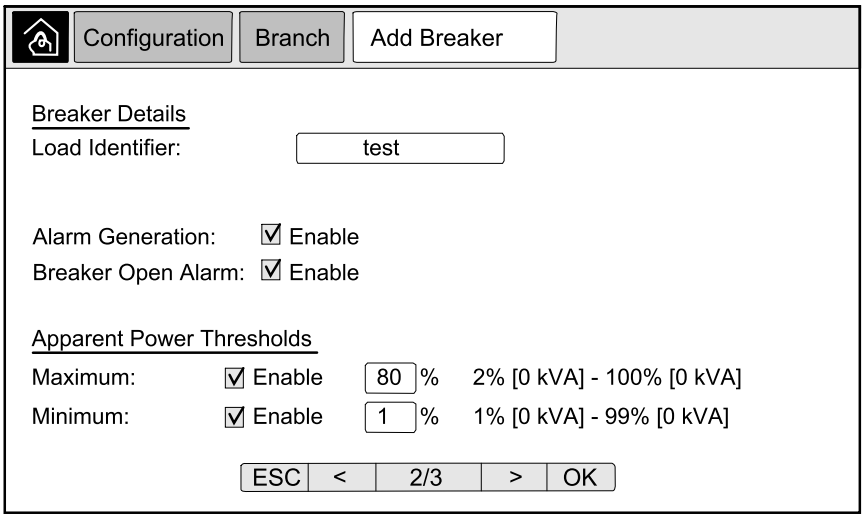

h. Enable **Alarm Generation**, if needed.

i. Enable **Breaker Open Alarm**, if needed.

j. Set the **Apparent Power Thresholds** for: **Maximum** and **Minimum** by tapping **Enable** and setting the percentage.

k. Tap the **>** symbol to go to the next page.

l. Set the **Current Thresholds** for: **Maximum**, **High**, **Low**, and **Minimum** by tapping **Enable** and setting the percentage.

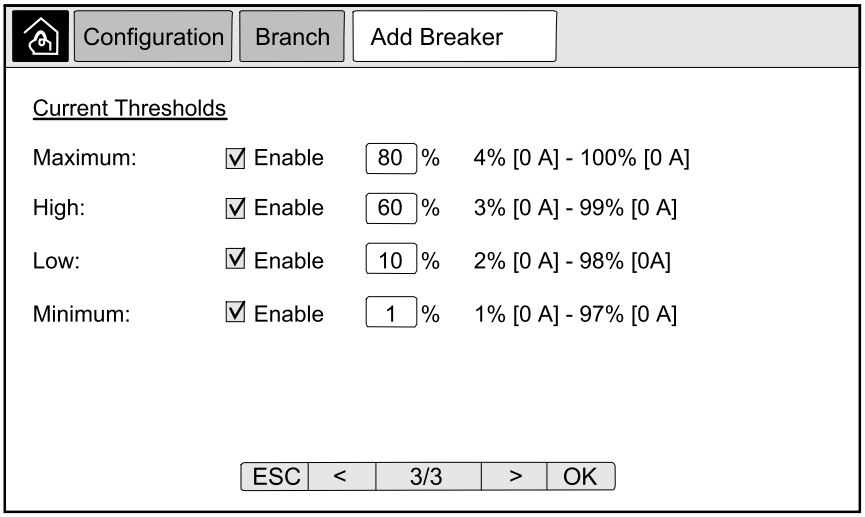

Edit or Delete a Branch Breaker

1. From the home screen on the display select **Configuration > Branch > Edit Breaker**.
2. Select the **Position** for the branch breaker and select **Modify Breaker** to edit the branch breaker parameters or **Delete Breaker** to delete the branch breaker from the configuration.

   NOTE: If an alarm exists for a given branch breaker, you must reboot the display after deleting a breaker to clear the alarm(s).

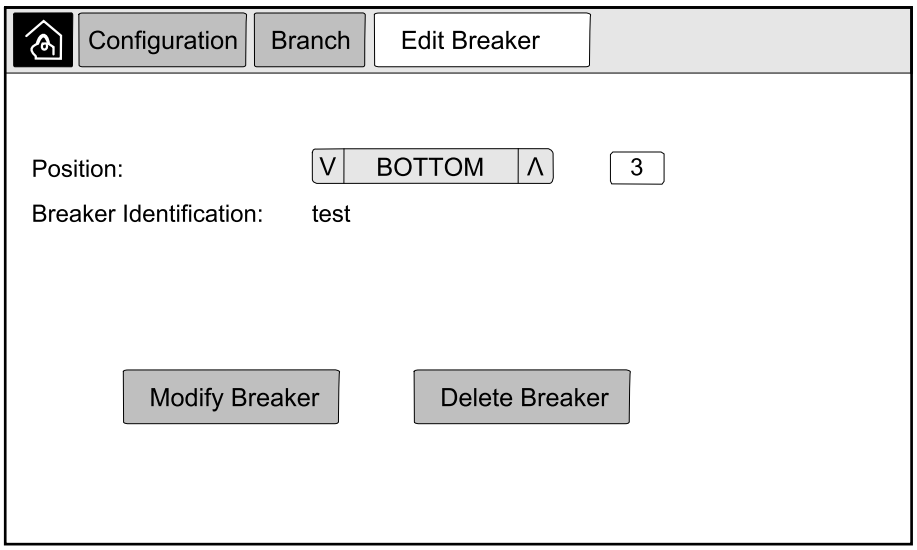

Configure the System

1. From the home screen on the display select **Configuration > System**.
2. Set **System Output Voltage** to **400 V** or **208 V** as per your system.
3. Set **Input Protection** to **Switch** or **Breaker** as per your system.
4. Set **Output Protection** to **Not Installed** or **Breaker** as per your system.
5. Set **Input Meter** to **None**, **EM3550**, or **PM5564** as per your system.
6. Set **Output Meter** to **EM3550**, **PM5564**, or **PM8244** as per your system.
7. Tap **OK** to save your settings.

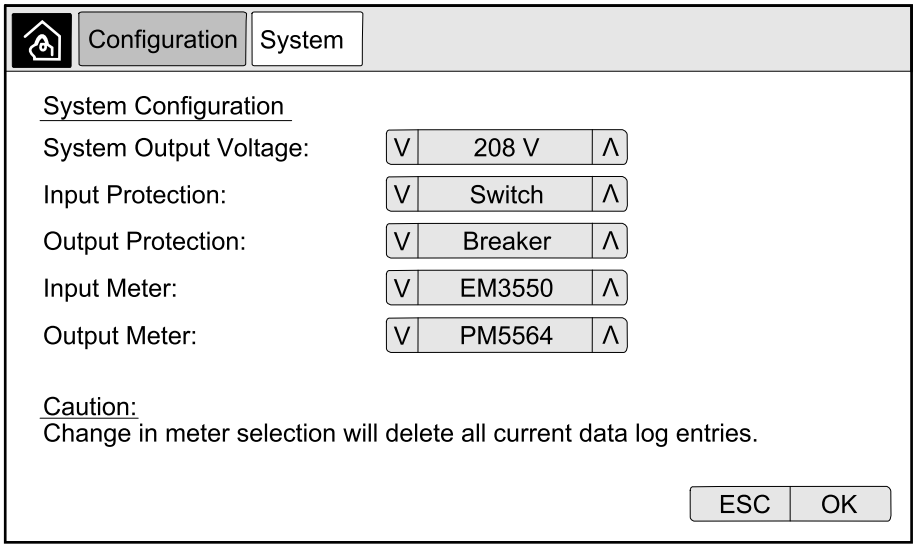

Configure the Display Preferences

1. From the home screen on the display select **Configuration > Display > Preferences**.

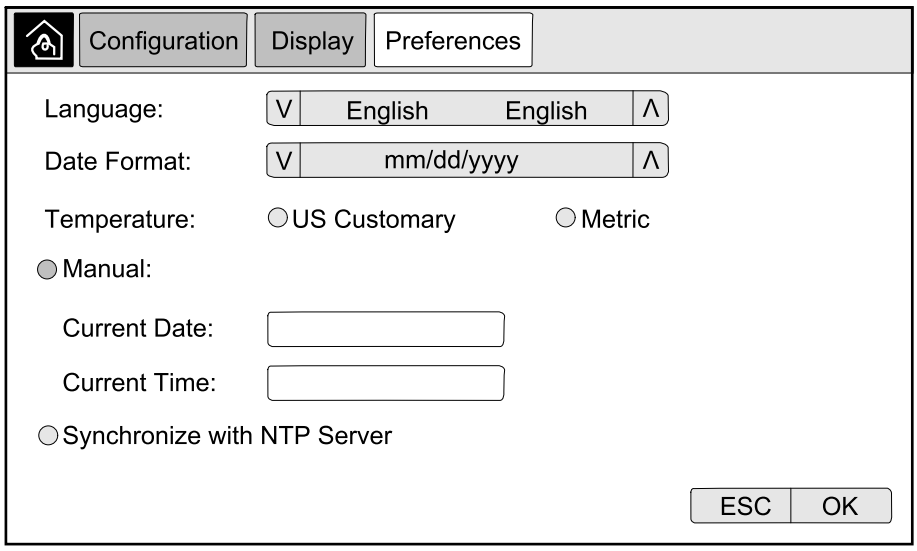

2. Select the preferred language using the up and down arrows.
3. Select the preferred date format using the up and down arrows.
4. Select the preferred temperature units: **US Customary** (°Fahrenheit) or **Metric** (°Celsius).
5. Set the current date and time using one of the below two methods:
   – Set the date and time manually on the display by selecting **Manual** and typing the actual date and time and completing with **Enter**.
   – Set the date and time automatically by selecting **Synchronize with NTP server** (Network Time Protocol server).

     NOTE: NTP server settings can be configured in the network management interface via the Web, command line, or config file.
6. Tap **OK** to save your settings.

Configure the Display Settings

1. From the home screen on the display select **Configuration > Display > System Settings**.

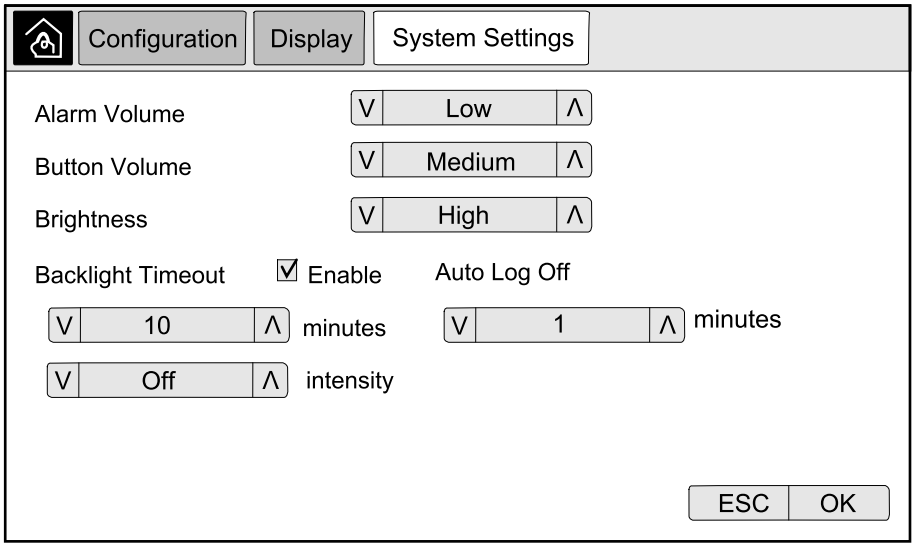

2. Set the **Alarm Volume**. Choose between: **Off**, **Low**, **Medium**, and **High**.
3. Set the **Button Volume**. Choose between: **Off**, **Low**, **Medium**, and **High**.
4. Set the **Brightness** of the display. Choose between: **Low**, **Medium**, and **High**.
5. Enable or disable **Backlight Timeout**. If you wish to enable backlight timeout, set the time limit in minutes for enabling backlight timeout. Choose between: **60**, **30**, **10**, **5**, and **1**.
6. Set the intensity of the backlight. Choose between: **Off**, **Very Low**, **Low**, and **Medium**.
7. Set the time limit in minutes for automatic log off. Choose between: **60**, **30**, **10**, **5**, and **1**.
8. Tap **OK** to save your settings.

Add a New User or Edit an Existing User

1. From the home screen on the display select **Configuration > Display > Security**.
2. Select **Add User** to add a new user or select **Edit User** to edit an existing user of the system.

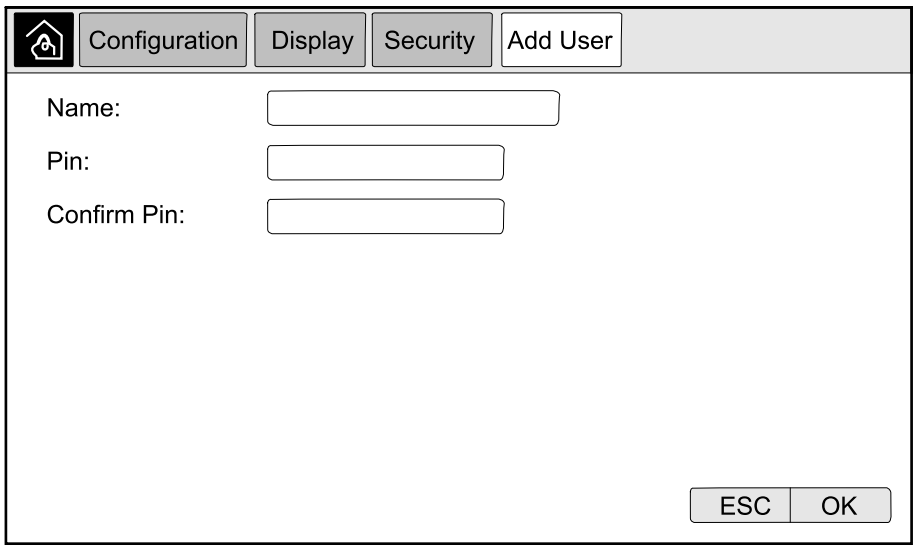

3. In the **Name** field, type in the name of the user. Complete with **Enter**.
4. In the **Pin** field, type in a pin code for the user. Complete with **Enter**.
5. In the **Confirm Pin** field, retype the pin code of the user. Complete with **Enter**.
6. Tap **OK** to save your settings.

Delete a User

1. From the home screen on the display select **Configuration > Display > Security > Delete User**.
2. Browse to the user that you wish to delete using the up and down arrows and tap **OK**.
3. Tap **Yes** to confirm deletion of an existing user of the system.

Configure the Network

1. From the home screen on the display select **Configuration > Network** and select either **TCP/IPv4**, **TCP/IPv6**, **Web Access**, or **FTP Server**.
2. Configure the following settings:
   a. **TCP/IPv4**: **Enable IPv4** (if applicable), and select the **Address Mode** (**Manual**, **DCHP**, or **BOOTP**).

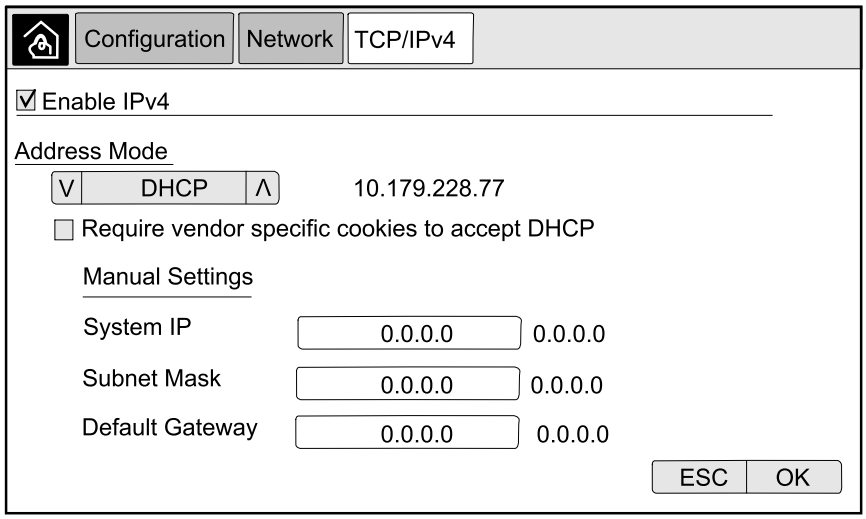

   b. **TCP/IPv6**: **Enable IPv6** (if applicable), select **Auto Configuration** or **Manual Configuration**, and select the **DHCPv6 Mode** (**Router controlled**, **Non-Address Information Only**, **Never**, or **Address and Other Information**).

      NOTE: Tap **Addresses** to see all valid IPv6 addresses.

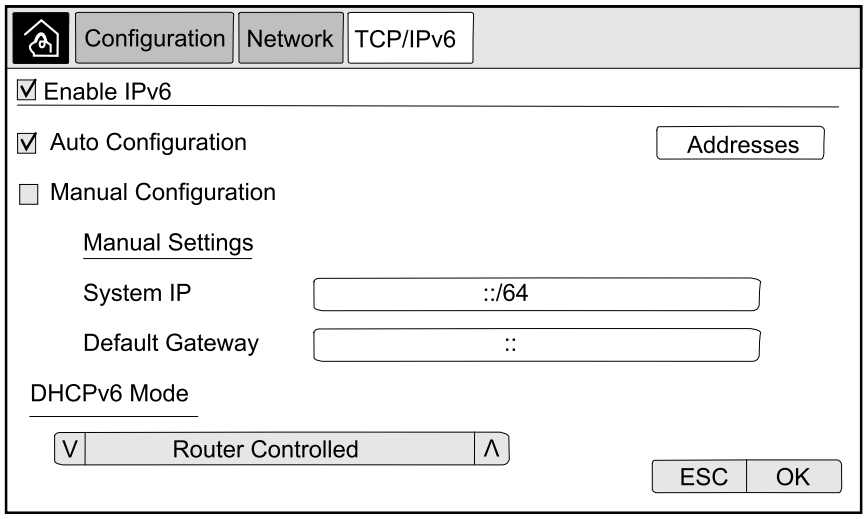

   c. **Web Access**: **Enable Web** (if applicable) and select the **Access Mode** (**HTTP** or **HTTPS**).

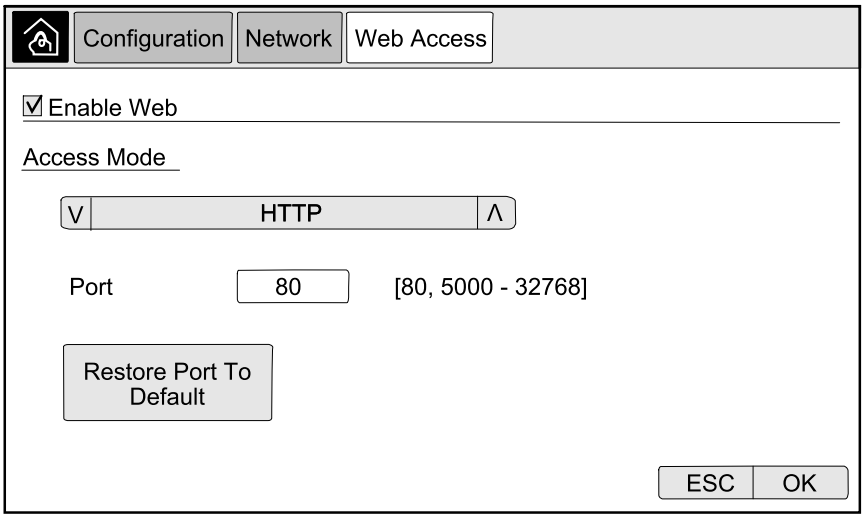

d. **FTP server**: **Enable FTP** (if applicable).

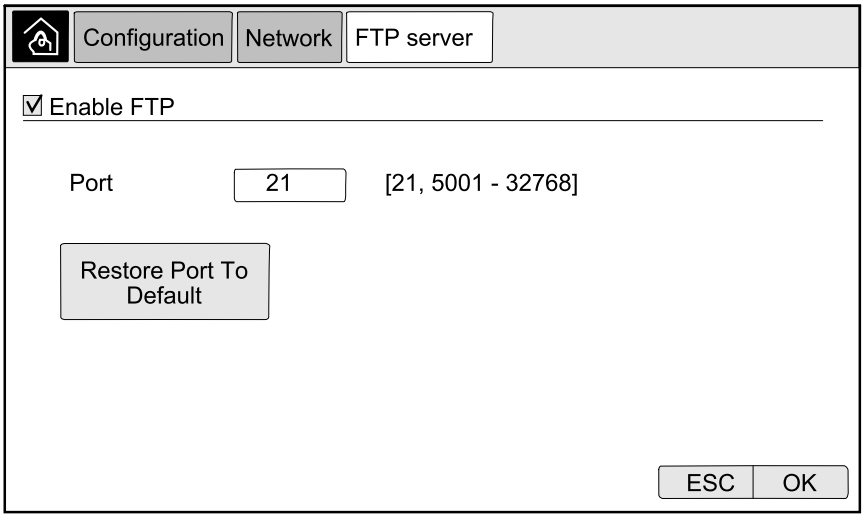

Configure Modbus

Modbus can be configured for the built-in network management card.

1. From the home screen on the display select **Configuration > Modbus**.
2. For **Serial**:
   a. Enable or disable **Access**.
   b. Set the **Address** to a number between 1 and 247.

      NOTE: Every device on the bus must have exactly the same settings except the **Address**, which must be unique for every device. No two devices on the bus can have the same address.

   c. Set the **Baud rate** to **9600** or **19200**.
   d. Set the **Mode** to:
      8, E, 1, or
      8, O, 1, or
      8, N, 1, or
      8, N, 2.
3. For **TCP**:
   a. Enable or disable **Access**.
   b. Set the **Port** to 502 or a value between 5000 and 32768.

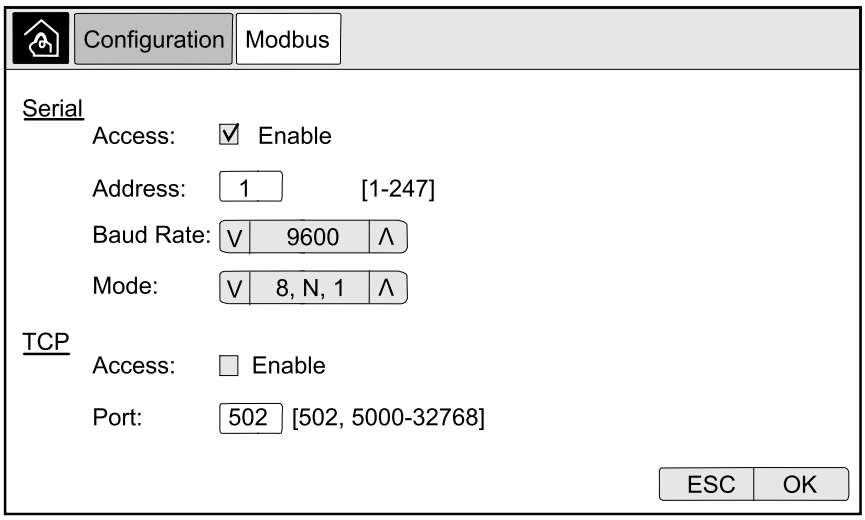

4. Tap **OK** to confirm your settings.

Restore Default Configuration

1. From the home screen on the display select **Configuration > Restore Defaults**.

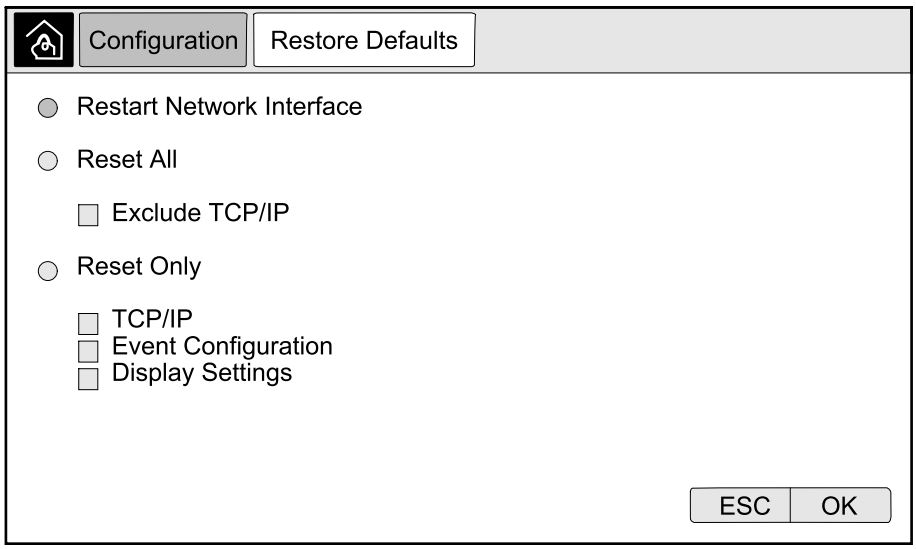

2. Select one of the below options:
   - **Restart Network Interface**: Select this option to restart network interface.
   - **Reset All**: Select this option to reset all settings to default. You can select to leave out the TCP/IP settings from the reset procedure.
   - **Reset Only**: Select this option if you only wish to reset parts of the settings to default values. You can select to reset the following settings: **TCP/IP**, **Event Configuration**, and **Display Settings**.
3. When you have made your selection, tap **OK** to reset the selected settings to default.

Operation Procedures

Access Password-Protected Screens

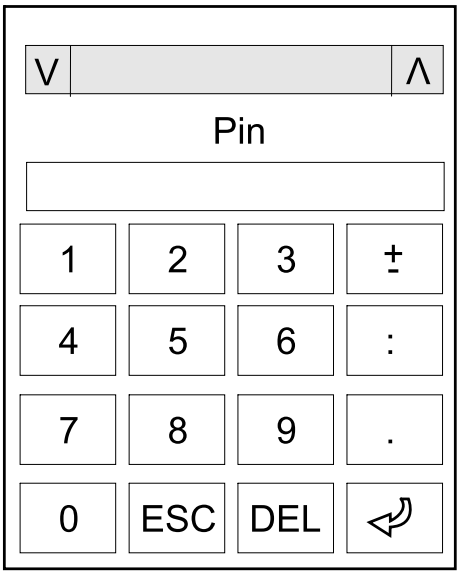

1. When prompted for the password, select your username.
2. Type in the pin code for your username.

   NOTE: The default pin code is 1234.
3. Change the password. For more information see .

View the System Status Information

1. From the home screen on the display select **Status** and select the area that you want to see the status for.

   NOTE: IF the PDU does not have an input meter installed, the input status screen will only show **Breaker State**:**Open**/**Closed**.

Input

Current	The present input current from the AC utility power source per phase in amperes (A).
Energy Usage	The accumulated input energy (kWh)
Frequency	The present input frequency in hertz (Hz).
Breaker Status	The present breaker status, either **Open** or **Closed**.
Voltage (phase-to-phase)	The present phase-to-phase input voltage.

NOTE: The different meters support different output parameters; The PDU display may not show all of the output parameters listed.

Output

Voltage (phase-to-neutral)[3]	The phase-to-neutral output voltage in volts (V).
Current	The present output current for each phase in amperes (A).
Active Power	The present active power (or real power) output for each phase in kilowatts (kW). Active power is the portion of power flow that, averaged over a complete cycle of the AC waveform, results in net transfer of energy in one direction.
Reactive Power	The present reactive power for each phase in kVAR. Reactive power represents energy alternately stored and released by inductive and capacitive loads in the system.
Apparent Power	The present apparent power output for each phase in kVA. Apparent power is the product of RMS (root mean square) volts and RMS amperes.
Power Factor	The present output power factor for each phase. Power factor is the ratio of active power to apparent power.
Displacement PF	The present output displacement power factor for each phase. Displacement power factor is the ratio of active power to apparent power considering the fundamental frequency (60 Hz) only, and neglecting the harmonics.
Frequency	The present output frequency in hertz (Hz).
Breaker Status	The present breaker status, either **Open** or **Closed**.
Voltage (phase-to-phase)	The phase-to-phase output voltage in volts (V).
Active	Active energy - The total active energy consumption since the unit was energized, in Watts-hour (Wh).
Reactive	Reactive energy - The total reactive energy consumption since the unit was energized, in VARh.
Apparent	Apparent energy - The total apparent energy consumption since the unit was energized, in Volt-Ampere-hour (VAh)
Total Active Power	The present total active output power (for all three phases) in kilowatts (kW).
Total Apparent Power	The present apparent power output for each phase in thousands of Volt-Amps (kVA). Apparent power is the product of RMS (root mean square) volts and RMS amperes.
Total Reactive Power	The present total reactive power in kVAR.
Total Power Factor	The present total power factor.
Total Displacement PF	The present total displacement power factor.
Energy Reset Date	The date and time since the unit was first energized and the accumulated energy has been measured.

3. Only applicable in systems with neutral connection.

System

Output Voltage	The phase-to-phase output voltage in volts (V).
Output Current	The present output current for each phase in amperes (A).
Output Frequency	The present output frequency in hertz (Hz).
Output Voltage (L-N)	The present phase-to-neutral output voltage in volts (V).
System Time	The time of the PDU system.
Power Factor	The present output power factor.
Breaker Status	The present output circuit breaker status, either **Open** or **Closed**.
Total Output Power	The apparent and active power (or real power) output for each phase.
Output Power	The phase-to-phase apparent and active power (or real power) output for each phase.

Active Alarms

Active Alarms	For more information on active alarms, go to View the Active Alarms, page 54.

Start Up the PDU

Contact Schneider Electric to schedule the first start-up of the PDU. Only qualified personnel must handle or operate the equipment.

Follow these steps any time that the system is restarted after having been shut completely down with no power applied to the system.

1. Verify the following before starting the PDU:
   a. The upstream input breaker is in the OFF position.
   b. The power cables have been correctly connected to the main input breaker MIB/main input switch MIS.
   c. Voltage connected to the PDU matches the PDU nameplate and model number.
   d. All equipment has been properly grounded.
   e. All power cables and signal cables are installed correctly.
   f. All ventilation areas are free for obstructions that might impair proper airflow.
2. Close the upstream input breaker.
3. Close the main input breaker MIB/main input switch MIS.
4. Verify the function of any installed power meters.
5. Close the main output breaker MOB, if present.
6. Close the individual branch breakers as required.

Post-requisite:

Verify normal operation of the PDU immediately after the start-up has been performed.

Use the display and power meters (if present) to verify proper readings from all circuits.

Shut Down the PDU

NOTE: Shutting down the PDU will cut the power to all connected loads.

1. Shut down the loads, if possible.
2. Open the individual branch breakers as required.
3. Open the main output breaker MOB, if present.
4. Open the main input breaker MIB/main input switch MIS.
5. Open the upstream input breaker.
6. Measure for voltages on all busbars before working on the PDU.

Access a Configured Network Management Interface

The below procedure describes how to access the network management interface from a web interface. It is also possible to use the following interfaces:

- Telnet and SSH
- SNMP
- FTP
- SCP

NOTE: Ensure that only one network management interface in the entire system is set to synchronize time.

Modern web browsers are compatible with the network management interface. Use the most recent version of your browser to mitigate the risk of software security vulnerabilities.

You can use either of the following protocols when you use the web interface:

- The HTTP protocol, which provides authentication by user name and Pin but no encryption.
- The HTTPS protocol, which provides extra security through Secure Sockets Layer/Transport Layer Security (SSL/TLS); encrypts user names, Pin, and data being transmitted; and authenticates network management cards by means of digital certificates.

NOTE: HTTP is disabled and HTTPS is enabled by default.

1. Access the network management interface by its IP address (or its DNS name, if a DNS name is configured).
2. Enter the user name and password.

   NOTE: The default user name and password and password are apc at first login. You will be prompted to enter a new password after you log in.
3. To enable or disable the HTTP or HTTPS protocol, use the **Network** menu on the **Administration** tab, and select the **Access** option under the **Web** heading on the left navigation menu.

Troubleshooting

The following is a list of the most common situations where the equipment does not perform as intended, the most likely cause, and a possible corrective action.

If the suggested corrective action does not return the equipment to normal operation, contact Schneider Electric for assistance.

Situation	Possible cause	Corrective action
The PDU has no input power.	No input source available.	Restore input source. Check the wiring continuity between the PDU input and the input source.
Specific output circuit(s) have no power.	Associated branch breaker(s) is OFF.	Turn the branch breaker(s) ON.
	The wiring between the branch breaker(s) and the equipment is incorrect.	Check for wiring continuity and correct phase sequence between the branch breaker(s) and the equipment.
	The equipment associated with the branch breaker is operating above the rated load.	Schedule a load check of the equipment with Schneider Electric; adjust for load balance if possible.
	The branch breaker is inoperable.	Replace the inoperable branch breaker.
No output from the PDU, but the display is active.	The main input breaker MIB is OFF.	1. Record which alarm indications are active. 2. Reset alarm(s) and clear external signal. 3. Check the alarm history display for reasons why the main input breaker MIB tripped. Below is a list of possible causes: • Manual trip, due to an emergency power off (EPO) button being pushed. • An alarm shutdown has occurred. Determine the cause and take corrective action before resetting the main input breaker MIB. • Automatic trip. An external signal was received from the building wiring via the alarm interface instructing the PDU to shunt-trip. • Output overload. Schedule a load check of the PDU with Schneider Electric. • Inoperable main input breaker MIB. Replace the main input breaker MIB. • Short circuit internal to the PDU. Troubleshoot the PDU or contact Schneider Electric.
	The main input switch MIS is OFF.	Turn the main input switch MIS ON.
Output from the PDU is on, but the display is not active.	Control power fuse(s) blown.	Replace fuse(s).
Overvoltage/ undervoltage.	Upstream UPS or power conditioner is inoperable.	Correct problem at the power source.
	Voltage drop due to distance or excessive load on output.	Reduce the distance or reduce the load.

Alarm Messages

Display alarm text	Description	Corrective action
<LX> Phase Loss Alarm	Line supply phase L1, L2, or L3 loss is detected.	Check the input source and the affected phase.
A Circuit Breaker within the Unit has Tripped	A circuit breaker within the unit has tripped.	Check the circuit breaker and identify the cause of the tripping. Clear the tripping event and close the circuit breaker.
Branch Breaker <position X> Apparent Power Below Minimum	Branch breaker in position X apparent power is below the minimum threshold.	Check the power for the affected branch breaker, evaluate the threshold setting, and adjust for your situation.
Branch Breaker <position X> Apparent Power Overload	Branch breaker in position X, apparent power is above the maximum threshold.	Check the power for the affected branch breaker, evaluate the threshold setting, and adjust for your situation.
Branch Breaker <position X> High Current Alarm at Phase <LX>	Branch breaker in position X, phase L1, L2, or L3 current is above the high threshold.	Check the current for the affected branch breaker, evaluate the threshold setting, and adjust for your situation.
Branch Breaker <position X> Low Current Alarm at Phase <LX>	Branch breaker in position X, phase L1, L2, or L3 current is below the low threshold.	Check the current for the affected branch breaker, evaluate the threshold setting, and adjust for your situation.
Branch Breaker <position X> Maximum Current Alarm at Phase <LX>	Branch breaker in position X, phase L1, L2, or L3 current is above the maximum threshold.	Check the current for the affected branch breaker, evaluate the threshold setting, and adjust for your situation.
Branch Breaker <position X> Minimum Current Alarm at Phase <LX>	Branch breaker in position X, phase L1, L2, or L3 current is below the minimum threshold.	Check the current for the affected branch breaker, evaluate the threshold setting, and adjust for your situation.
Branch Circuit Breaker <position X> Open	The branch circuit breaker in position X is open.	Check the branch circuit breaker and adjust position or alarm settings depending on your situation.
EPO Activated	The EPO was activated.	Reset EPO. Check the remote EPO for the room or the fire control panel, or the EPO button located on the front panel of the PDU.
Input Breaker Open	The main input breaker is open.	Check the main input breaker and adjust position or alarm settings depending on your situation.
Input Current High Alarm at Phase <LX>	The input phase L1, L2, or L3 current is above the high threshold.	Check the input current for the affected phase, evaluate the threshold setting, and adjust for your situation.
Input Current Low Alarm at Phase <LX>	The input phase L1, L2, or L3 current is below the low threshold.	Check the input current for the affected phase, evaluate the threshold setting, and adjust for your situation.
Input Current Maximum Alarm at Phase <LX>	The input phase L1, L2, or L3 current is above the maximum threshold.	Check the input current for the affected phase, evaluate the threshold setting, and adjust for your situation.

Display alarm text	Description	Corrective action
Input Current Minimum Alarm at Phase <LX>	The input phase L1, L2, or L3 current is below the minimum threshold.	Check the input current for the affected phase, evaluate the threshold setting, and adjust for your situation.
Input Voltage Maximum Alarm at Phase <LX>	The input phase L1, L2, or L3 voltage is above the maximum threshold.	Check the input voltage for the affected phase, evaluate the threshold setting, and adjust for your situation.
Input Voltage High Alarm at Phase <LX>	The input phase L1, L2, or L3 voltage is above the high threshold.	Check the input voltage for the affected phase, evaluate the threshold setting, and adjust for your situation.
Input Voltage Low Alarm at Phase <LX>	The input phase L1, L2, or L3 voltage is below the low threshold.	Check the input voltage for the affected phase, evaluate the threshold setting, and adjust for your situation.
Input Voltage Minimum Alarm at Phase <LX>	The input phase L1, L2, or L3 voltage is below the minimum threshold.	Check the input voltage for the affected phase, evaluate the threshold setting, and adjust for your situation.
NMC Communication Lost with <X> Meter	Lost the local network management interface-to-input meter, output meter, or branch meter communication.	Check the signal cables. Check that the meter is energized and that it has been configured correctly — use the power meter documentation supplied with the power meter. If the alarm persists, contact Schneider Electric.
Output Active Power Phase <LX> Overload	The output active power for phase L1, L2, or L3 is above the selected high threshold.	Check the output power for the affected phase, evaluate the threshold setting, and adjust for your situation.
Output Apparent Power Phase <LX> Below Normal	The output apparent power for phase L1, L2, or L3 is below the selected minimum threshold.	Check the output power for the affected phase, evaluate the threshold setting, and adjust for your situation.
Output Apparent Power Phase <LX> Overload	The output apparent power for phase L1, L2, or L3 is above the selected maximum threshold.	Check the output power for the affected phase, evaluate the threshold setting, and adjust for your situation.
Output Breaker Open	The main output breaker is open.	Check the main output breaker and adjust position or alarm settings depending on your situation.
Output Current High Alarm at Phase <LX>	The output phase L1, L2, or L3 current is above the high threshold.	Check the output current for the affected phase, evaluate the threshold setting, and adjust for your situation.
Output Current Low Alarm at Phase <LX>	The output phase L1, L2, or L3 current is below the low threshold.	Check the output current for the affected phase, evaluate the threshold setting, and adjust for your situation.
Output Current Maximum Alarm at Phase <LX>	The output phase L1, L2, or L3 current is above the maximum threshold.	Check the output current for the affected phase, evaluate the threshold setting, and adjust for your situation.

Display alarm text	Description	Corrective action
Output Current Minimum Alarm at Phase <LX>	The output phase L1, L2, or L3 current is below the minimum threshold.	Check the output current for the affected phase, evaluate the threshold setting, and adjust for your situation.
Output Frequency Out of Range	The output frequency is out of range.	Check the output frequency, evaluate the threshold setting, and adjust for your situation.
Output Power Factor Deviation Alarm at Phase <LX>	Output power factor deviation for phase L1, L2, or L3 exists.	Check the output power factor deviation for the affected phase, evaluate the threshold setting, and adjust for your situation.
Output Voltage High Alarm at Phase <LX>	The output phase L1, L2, or L3 voltage is above the high threshold.	Check the output voltage for the affected phase, evaluate the threshold setting, and adjust for your situation.
Output Voltage Low Alarm at Phase <LX>	The output phase L1, L2, or L3 voltage is below the low threshold.	Check the output voltage for the affected phase, evaluate the threshold setting, and adjust for your situation.
Output Voltage Maximum Alarm at Phase <LX>	The output phase L1, L2, or L3 voltage is above the maximum threshold.	Check the output voltage for the affected phase, evaluate the threshold setting, and adjust for your situation.
Output Voltage Minimum Alarm at Phase <LX>	The output phase L1, L2, or L3 voltage is below the minimum threshold.	Check the output voltage for the affected phase, evaluate the threshold setting, and adjust for your situation.
Transformer High Temperature Alarm	Temperature at input transformer is higher than the normal range.	Check that the ventilation of the PDU is not blocked and review the information available from the metering display to determine if the PDU is overloaded.
Transient Voltage Surge Suppressor Alarm	Transient voltage surge suppressor system requires service.	Contact Schneider Electric to schedule a maintenance visit.

NOTE: Contact Schneider Electric if the PDU is operating correctly and the alarm persists, or if no root cause is found.

View the Log

1. From the home screen on the display select **Logs**.
2. You can browse through the list of the events using the arrows.

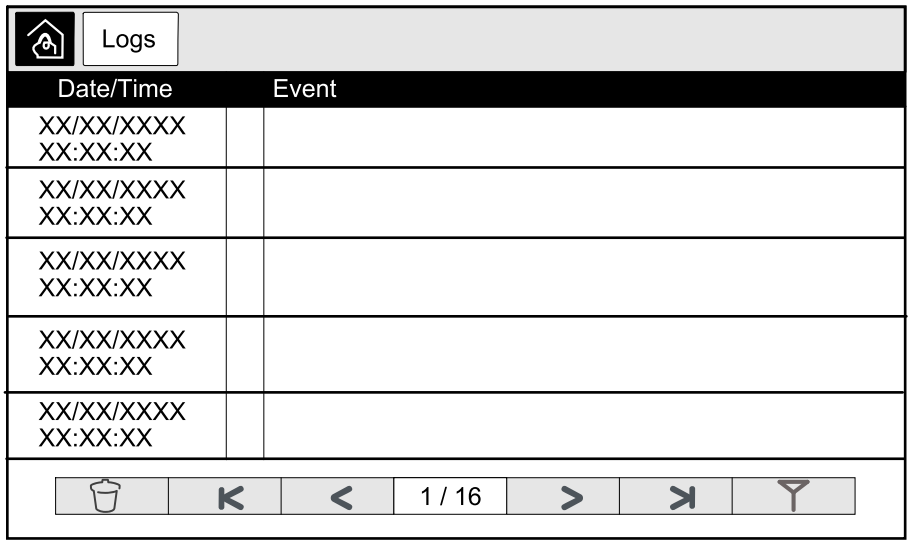

3. You can now perform the following operations in the event log:
   a. Tap the filter button to filter the events. Different filter settings are available.

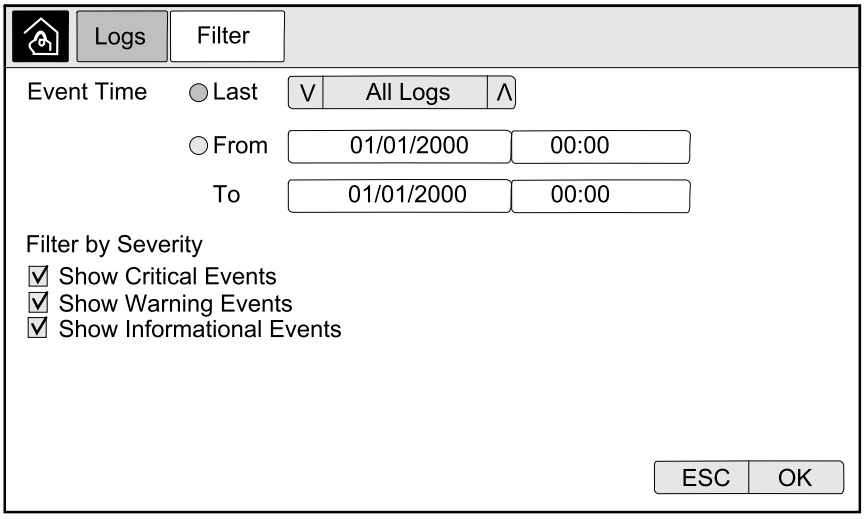

   b. Tap the recycle bin button to clear the event log and select **Yes** to confirm.
4. Tap the home button to exit the log.

View the Active Alarms

When there is an active alarm in the system, a symbol indicating the alarm level is shown in the top right corner of the screen and the buzzer is active.

1. From the home screen on the display select **Status > Active Alarms**. Tapping the display will also silence the buzzer temporarily without login. By logging in and tapping the display, the buzzer will be silenced permanently.
2. You can now browse through the list of active alarms using the left and right arrows.
3. Tap the **Refresh** button to update the list with the latest active alarms.

Alarm Levels

There are three alarm levels:

- Critical: Take immediate action and call Schneider Electric.
- Warning: The load remains supported, but action must be taken. Call Schneider Electric.
- Informational: No immediate action required. Check the cause of the alarm as soon as possible.

Reset EPO Alarm or Buzzer

1. From the home screen on the display select **Reset Alarm**.
2. Tap **EPO Reset** to reset the EPO alarm, or tap **Audio Reset** to reset the buzzer.

Calibrate the Display

From the home screen on the display select **Tests > Display Calibration** and then select the calibration you want to perform.

- **Calibrate**: Tests and adjusts the touch screen target sensitivity.
- **Calibration Check**: Checks the calibration adjustments.

Maintenance

Determine if you need a Replacement Part

To determine if you need a replacement part, contact Schneider Electric and follow the procedure below so that the representative can assist you promptly:

1. In the event of an alarm condition, scroll through the alarm lists, record the information, and provide it to the representative.
2. Write down the serial number of the unit so that you will have it easily accessible when you contact Schneider Electric.
3. If possible, call Schneider Electric from a telephone that is within reach of the display so that you can gather and report additional information to the representative.
4. Be prepared to provide a detailed description of the problem. A representative will help you solve the problem over the telephone, if possible, or will assign a return material authorization (RMA) number to you. If a module is returned to Schneider Electric, this RMA number must be clearly printed on the outside of the package.
5. If the unit is within the warranty period and has been started up by Schneider Electric, repairs or replacements will be performed free of charge. If it is not within the warranty period, there will be a charge.
6. If the unit is covered by a Schneider Electric service contract, have the contract available to provide information to the representative.

Find the Serial Numbers

NOTE: If the display is not available, the serial number can also be found on a label in the cabinet.

1. From the home screen on the display tap **About**.
2. Tap on **PDU** and note down the serial number and have it ready for customer support.
3. Tap on the **About** in the top of the screen to go back.
4. Tap on **Display** and note down the serial number and have it ready for customer support.

Schneider Electric
35 rue Joseph Monier
92500 Rueil Malmaison
France

+ 33 (0) 1 41 29 70 00

As standards, specifications, and design change from time to time, please ask for confirmation of the information given in this publication.

990-5936D-001