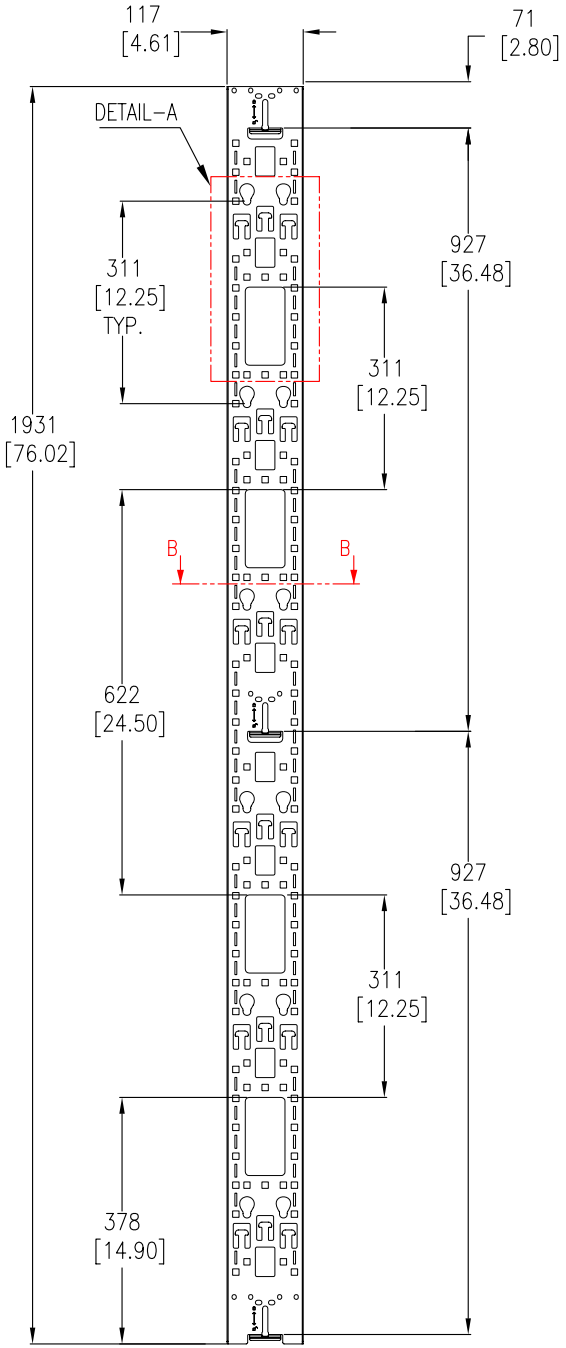

FRONT VIEW

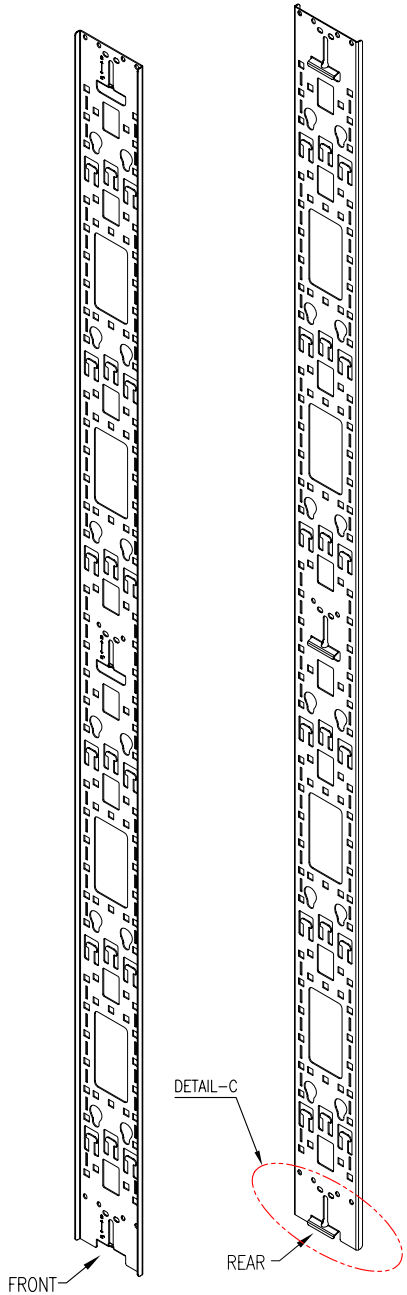

ISOMETRIC VIEW

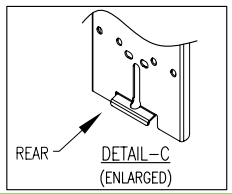

DETAIL-C
(ENLARGED)

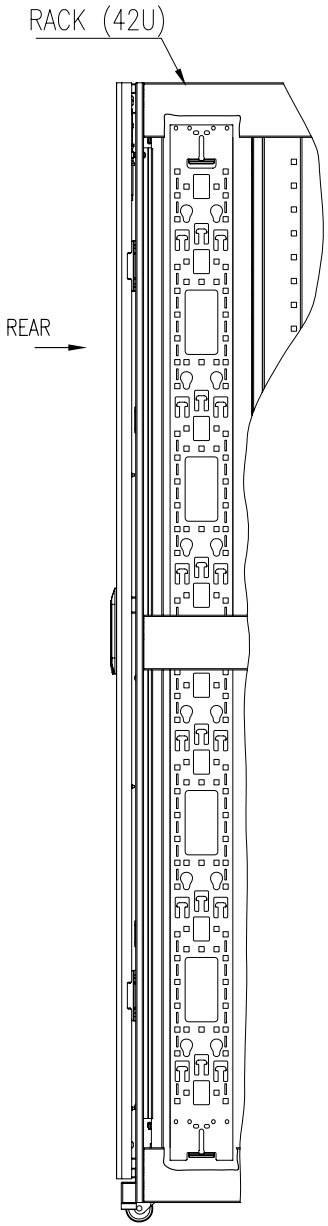

TYPICAL MOUNTING INSIDE THE RACK
(RACK SIDE COVERS REMOVED)

NOTES:

1. INSTALLATION MUST COMPLY WITH NATIONAL AND LOCAL ELECTRICAL REGULATIONS.
2. PLEASE REFER TO THE PRODUCT MANUAL FOR DETAILS.
3. UNLESS OTHERWISE SPECIFIED, ALL DIMENSIONS ARE IN MILLIMETERS [INCHES].
4. NET WEIGHT OF UNIT IS 2.27 kg [5.0 lbs].
5. AR7502 SKU INCLUDES 2-UNITS.

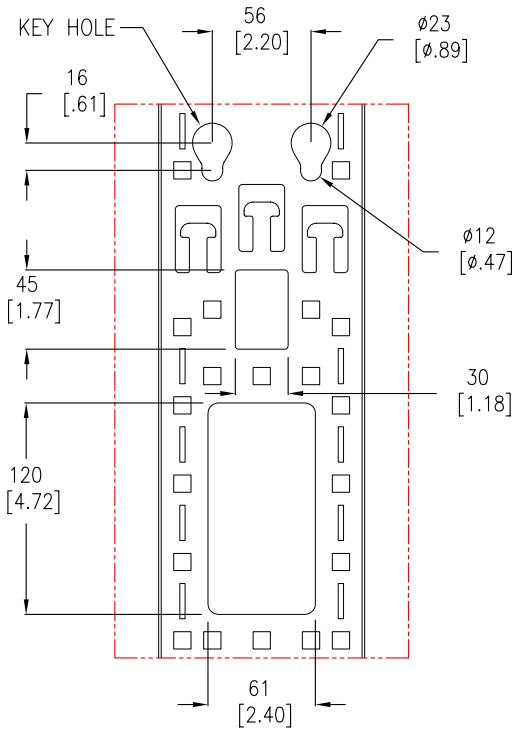

DETAIL-A
(ENLARGED VIEW)

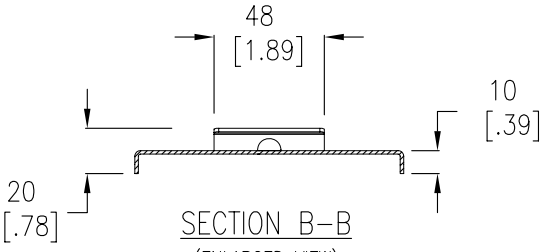

SECTION B-B
(ENLARGED VIEW)

Schneider Electric

TITLE: RACKS AND ACCESSORIES CABLE MANAGEMENT Vertical Cable Organizers, Esthete SX-42U MAIN MECHANICAL	DWG NO: AR7502		REV. 1
	DRAWN BY: K.NAGENDRA	09-MAY-12	FIRST ANGLE PROJECTION
	ENGINEER: J.KUMMER	09-MAY-12	
PROJECT: SUBMITTAL DRAWINGS SHEET 1 OF 1	APPROVED BY: S.VOCCIO	09-MAY-12	