en User Manual & Installation Guide

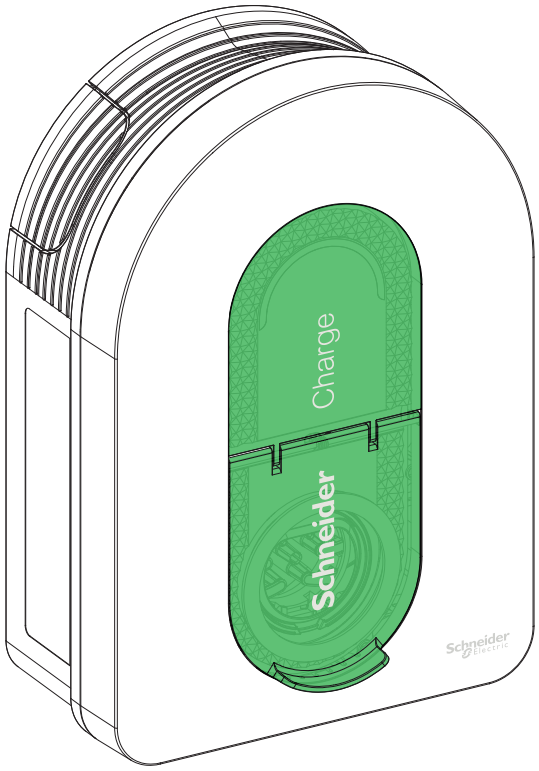

EVH5A22N400F

Customer Care Center

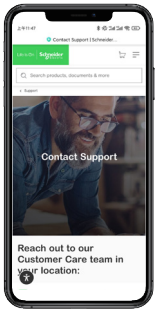

Go2SE

Schneider Charge

Please scan the QR code of Go2SE on product nameplate to get the latest edition of user manual and watch the installation videos.

Schneider Electric

Table of Content

Safety 3

1 Contents 4

2 Description 5

2.1 Product References and Characteristics 5

2.2 Product Description 5

3 Characteristics 6

3.1 General Data 6

3.2 Certification 6

3.3 Environment 6

3.4 Accessories 6

4 Protection 7

4.1 Upstream Protections 7

4.2 Distribution System Operator (DSO) 7

4.3 Power Cable Requirements 7

5 Electrical Diagram 8

6 Installation 9

6.1 Equipment Supplied by User 9

6.2 Tools Supplied by User 9

6.3 Wall Mounting 9

6.4 Wiring 12

7 Connection 18

7.1 Wire-up Signal Line 18

7.2 Wire-up Power Supply 18

8 Inspection 19

9 Energy Management (For Schneider Charge with TIC Function) 19

10 Commissioning with Application 20

10.1 Commissioning with eSetup Application 20

10.1.1 Connect & Update 20

10.1.2 Configure Electrical Settings 21

10.1.3 Pre-configure the Smart Charging Application (Optional) 21

10.1.4 Finalize 21

10.1.5 Ready to Operate 21

10.2 Commissioning with Wiser Home Application 22

10.2.1 Connect & Update 22

10.2.2 Configure Electrical Settings 23

10.2.3 Configure Network Settings (Optional) 23

10.2.4 Finalize 23

10.2.5 Ready to Operate 23

11 Operation 24

11.1 Connecting the Electric Vehicle Charging Station 24

11.2 Disconnecting the Electric Vehicle 24

11.3 Connection to a Smart Charging Application 24

11.3.1 Prerequisites 24

11.3.2 Connect 25

11.3.3 Ready to Operate Remotely 25

12 Reset to Factory 26

13 Charging Station Indicators 26

14 Basic Troubleshooting 27

15 Wireless Feature Declaration 27

16 Recycle 27

The information provided in this document contains general descriptions, technical characteristics and/or recommendations related to products/solutions.

This document is not intended as a substitute for a detailed study or operational and site-specific development or schematic plan. It is not to be used for determining suitability or reliability of the products/solutions for specific user applications. It is the duty of any such user to perform or have any professional expert of its choice (integrator, specifier or the like) perform the appropriate and comprehensive risk analysis, evaluation and testing of the products/solutions with respect to the relevant specific application or use thereof.

The Schneider Electric brand and any trademarks of Schneider Electric SE and its subsidiaries referred to in this document are the property of Schneider Electric SE or its subsidiaries. All other brands may be trademarks of their respective owner.

This document and its content are protected under applicable copy right laws and provided for informative use only. No part of this document may be reproduced or transmitted in any form or by any means (electronic, mechanical, photocopying, recording, or otherwise), for any purpose, without the prior written permission of Schneider Electric.

Schneider Electric does not grant any right or license for commercial use of the document or its content, except for a non-exclusive and personal license to consult it on an "as is" basis.

Schneider Electric reserves the right to make changes or updates with respect to or in the content of this document or the format thereof, at any time without notice.

To the extent permitted by applicable law, no responsibility or liability is assumed by Schneider Electric and its subsidiaries for any errors or omissions in the informational content of this document, as well as any non-intended use or misuse of the content thereof.

Electrical equipment should be installed, operated, serviced, and maintained only by qualified personnel. No responsibility is assumed by Schneider Electric for any consequences arising out of the use of this material.

Safety

Important Information

Read these instructions carefully, and look at the equipment to become familiar with the device before trying to install, operate, or maintain it. The following special messages may appear throughout this documentation or on the equipment to warn of potential hazards or to call attention to information that clarifies or simplifies a procedure.

The addition of this symbol to a “Danger” or “Warning” safety label indicates that an electrical hazard exists which will result in personal injury if the instructions are not followed.

This is the safety alert symbol. It is used to alert you to potential personal injury hazards. Obey all safety messages that follow this symbol to avoid possible injury or death.

⚠ DANGER

DANGER indicates a hazardous situation which, if not avoided, **will result in** death or serious injury.

⚠ WARNING

WARNING indicates a hazardous situation which, if not avoided, **could result in** death or serious injury.

⚠ CAUTION

CAUTION indicates a hazardous situation which, if not avoided, **could result in** minor or moderate injury.

NOTICE

NOTICE is used to address practices not related to physical injury.

PLEASE NOTE
- All applicable local, regional and national regulations must be complied with during the installation, use, maintenance and replacement of this device.
- Schneider Electric cannot be held responsible in the event of non-compliance with the instructions in this document and in the documents to which it refers.
- The service instruction must be observed throughout the life time of this device.

⚠ ⚠ WARNING

RISK OF INJURY OR DAMAGING THE CHARGING STATION
- The installation, maintenance and eventual replacement of this device must only be carried out by a qualified electrician.
- This device must not be repaired.
- This device should not be installed if, when unpacking it, you observe that it is damaged.
- The charging station, the cable and the connector must be regularly checked by to detect any potential damage (visual inspection).
- In case the charging station is damaged, it must be immediately turned off and replaced.
- Do not perform any maintenance work on the equipment.
- Do not remove signs such as safety symbols, warnings, nameplates, signs or markings.
- Do not connect any other type of loads to the charging station (power tools, etc.). Only connect electric vehicles or their charging equipment.
- Do not disconnect the connector by pulling the cable. Hold the connector in your hand to disconnect the connector from the electrical vehicule.
- Do not bend, squeeze or tilt the connector so that it is mechanically damaged.
- Prevent the connector to be in contact with heat source, dirt or water.
- Never clean the charging station by spraying it with water (Hose for garden watering, high pressure cleaners, etc.).
- Never clean the charging station by chemical or aggressive cleaner.

Failure to follow these instructions could result in death, serious injury, or equipment damage.

1 Contents

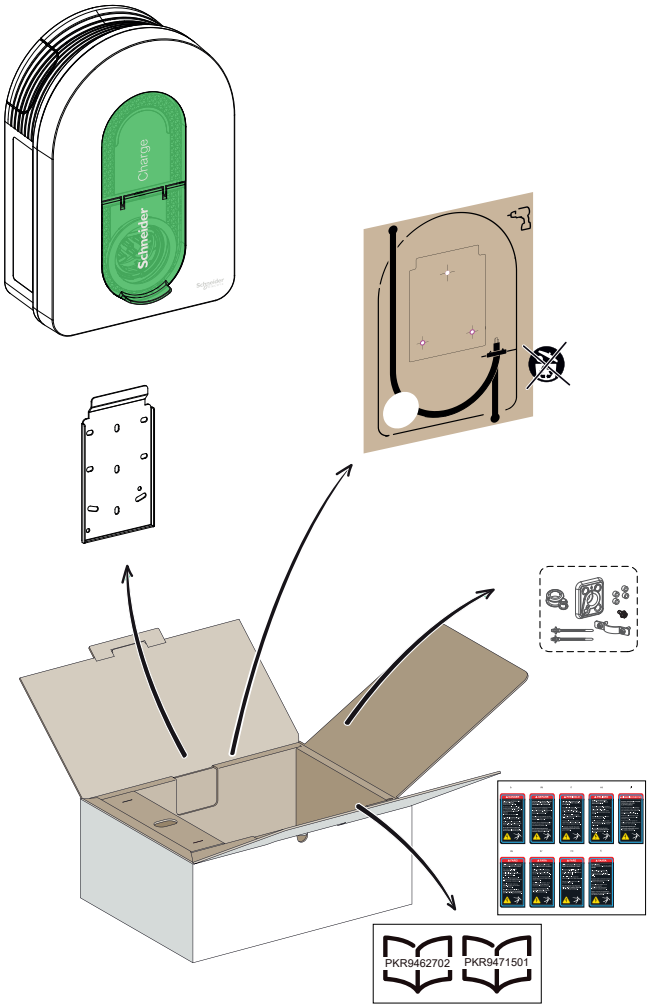

	Gasket body		Gasket-small (3)
	Ziptec x 2		Gasket-big (4)
	Spacer x 4 (1)		Clamp-big (4)
	PH2 M4 * 10 (2)		

(1) Only used for installation on irregular wall
(2) Replacement screw
(3) Used for power cable 10-20 mm
(4) Used for power cable 20-23 mm

2 Description

2.1 Product References and Characteristics

Product Reference		EVH5A22 N400F
Market	IEC	
	France	■
Electrical Characteristics	Network	1P/3P+N
	Power rating (1P/3P) (kW)	(7,4)*/(11)**/22
	Max current per phase (A)	32
	Number of charge point	1
	T2S socket	■
Protections	In-built RDC-DD 6mA	■
	IP55	■
	IK10	■
Load Management	With anti-tripping module EVA2HPC1 (1P+N until 100A)	■
	With anti-tripping module EVA4HPC1 (1P+N until 50A)	■
	With anti-tripping module EVA2HPC3 (3P+N until 50A)	■
	With Linky meter (TIC)	■
	DSO input (dry contact)	
Installation	Wall mounted	■
	Dimensions	352x244x107 mm 13.9x9.6x4.6 in
	Weight	3.2 kg/7.05 lb
Configuration	With commissioning application (Wiser Home or eSetup) (Wi-Fi Access Point)	■
Connectivity for Supervision	Wi-Fi 2.4 GHz	■
	Ethernet (1 port)	■
	OCPP1.6J	■
	Wiser Home	■
	Connect-able to third party app	■
In-built Metering	Power	■
	Current	■
	Energy	■

* When power supply is single-phase, please use charging station according to the power in brackets.
** With derating by commissioning application (Wiser Home or eSetup).

2.2 Product Description

- This charging station is an electrical appliance that supplies electric energy to charge plug-in electric vehicles for indoor and private outdoor areas.
- When installing and using the charging station, ensure that you comply with local regulations.
- The intended use of the equipment includes, in all cases, the environmental conditions established for the equipment.

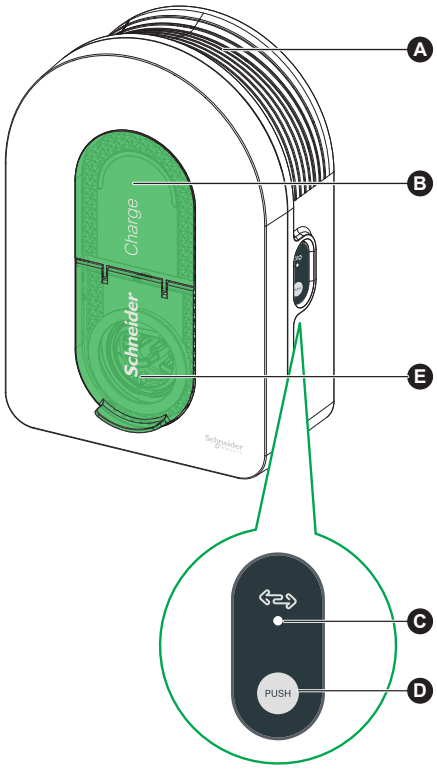

A	Cable winding trough	When not in use, wrap the charging cable around the charging station's trough to avoid tripping hazards and equipment damage.
B	Front indicator light	Indicates the status of the charging station and charging session, more details in section "Charging Station Indicators", page 26.
C	Side indicator light	Indicates status during Wi-Fi access point commissioning/anti-tripping module pairing/reset to factory*.
D	Functional button	Press to enable Wi-Fi access point/Reset PIN Code/anti-tripping module pairing/reset to factory* (power off and then back on the product to enable this button).
E	Charging socket	Plug in your T2 charging cable.

* This feature was updated from firmware version 1.11.0 (release date 2024/6/3) (more details in section "Reset to Factory"). Upgrade firmware version via the commissioning application (Wiser Home or eSetup) if needed.

3 Characteristics

3.1 General Data

- Ingress protection rating: IP55 (IEC 60529)
- Impact protection rating: IK10 (IEC 62262)
- Socket for T2 cable or T2 attached cable according to IEC 62196-1 and IEC 62196-2
- Operating temperature:
  - -30°C to +50°C for 7.4 kW (1P 32A) Schneider Charge with T2S socket (-22°F to +122°F) (up to 55°C/131°F with derating)(-30)
  - -30°C to +55°C for 11 kW (3P 16A) Schneider Charge with T2S socket (-22°F to +131°F) (-30)
  - -30°C to +45°C for 22 kW (3P 32A) Schneider Charge with T2S socket (-22°F to +113°F) (up to 55°C/131°F with derating)(-30)
- Storage temperature: -40°C to +85°C (-40°F to +185°F)
- Relative humidity: 5-95 %
- Rated voltage (depending on model):
  - For 7.4 kW: 220-240V AC +/- 10 %, 50/60 Hz
  - For 11 kW/22 kW: 380-415V AC +/- 10 %, 50/60 Hz
- Rated charging current: 32A for 7.4 kW, 16A for 11 kW and 32A for 22 kW
- Accuracy of current, voltage and power measurement: 1 %
- Diagram of the earthing system: TN-S, TN-C-S, TT, IT (only 220-240V, single-phase)
- Designed for indoor and outdoor use
- OCPP 1.6J
- Wi-Fi feature 2.4 GHz
  - Operating frequency bands: 2412 MHz-2472 MHz
  - Maximal RF output power: less than 20 dBm (18.25 dBm)
- 1 Ethernet port

3.2 Certification

- EN IEC 61851-1
- IEC 61439-7
- IEC 62955 (Product compliance starts with SN2502270891 and upper.)
- EN IEC 61851-21-2
- EN IEC 61000-6-1
- EN IEC 61000-6-2
- EN IEC 61000-6-3
- EN IEC 61000-6-4
- EN 301 489-1
- EN 301 489-17
- EN 300 328
- EN IEC 62311
- EV Ready

3.3 Environment

- Compliant with the RoHS directive
- Compliant with the REACH regulation

3.4 Accessories

- Schneider Charge anti-tripping module (peak controller), single-phase, low rating (EVA4HPC1, 16-50A) (For charging station without TIC function)
- Schneider Charge anti-tripping module (peak controller), single-phase, high rating (EVA2HPC1, 32-100A) (For charging station without TIC function)
- Schneider Charge anti-tripping module (peak controller), three-phase, low rating (EVA2HPC3, 16-50A) (For charging station without TIC function)
- Schneider Charge cable holder (EVA5GH) (For charging station with attached cable)

Notes:

- If the above accessories are purchased, please refer to the instruction sheet of them for use.
- The anti-tripping module adapt/limits the power draw of the Schneider Charge, **in some cases completely stopping the charging**, to avoid a power outage of your home electrical supply. Schneider Charge provides pairing function with anti-tripping module. Refer to the anti-tripping module's instruction sheet.
- **According to the power available for the electrical installation, especially if the home is equipped with a heat pump. Minimum recommendation: 25A 3P+N.**

4 Protection

⚠⚠ DANGER

HAZARD OF ELECTRIC SHOCK, EXPLOSION OR ARC FLASH
Do not install automatic reset systems on the residual current protection device.
Failure to follow these instructions will result in death or serious injury.

4.1 Upstream Protections

- The Electric Vehicle measures the ground resistance and will only start charging if it is lower than the threshold defined by the Electric Vehicle manufacturer. Refer to the vehicle's technical documentation.
- The choice of electrical protections and wire gauges must comply with local regulations and the information below as well as the constraints of the electrical installation. In particular, the selected protection must not only satisfy the requirements of IEC 61851-1 ed 3.0 (1) but must also limit the value of I^2t to less than 75 000 A^2s in case of a short-circuit. The minimum value of peak current Ip is 3 kA based on IEC 62955.

(1) According to section 13 of IEC 61851-1 ed 3.0, such over-current protective devices shall comply with IEC 60947-2, IEC 60947-6-2 or IEC 61009-1 or with the relevant parts of IEC 60898 series or IEC 60269 series.

Charging station rated current	32A 1-Phase	16A 3-Phase	32A 3-Phase
Charging station power rating	7.4 kW	11 kW	22 kW
Protection against overload and short circuits	40A curve B or C (2)	20A curve C	40A curve C
Differential protection	30mA type A Si or type B EV	30mA type A Si or type B EV	30mA type A Si or type B EV

(2) According to selectivity with upstream protections
Recommended protection: Acti**9** iC60 (If an alternative product is selected, please ensure that it complies with energy limiting class 3.)

- An Undervoltage release (iMNx) controlled by the charging station must be installed to enable to activate the upstream circuit-breaker tripping.
- The protections described above should only be taken as suggestions and it remains the responsibility of the installer to be compliant with the local country regulation.

Recommendations for lightning protection
One surge arrester per charging station is recommended for high keraunic levels, mandatory if required by local regulations.

4.2 Distribution System Operator (DSO)

- According to Technical Connection Rules VDE-AR-N-4100:2019-04 Cl. 10.6.4, a charging station with a total rated power of more than 12 kVA must have a remote power control interface to allow remote control by the Distribution System Operator (DSO).
  - A dry connector for DSO input to suspend the Schneider Charge.
  - Input connector for DSO cable: 0.2-1.5 mm2 (AWG 24-15.5) flex and rigid cable.
  - Schneider Charge DSO input supports only Normally Open (NO) configuration:
    - Contact open: charge allowed
    - Contact closed per the utility: charge suspended

4.3 Power Cable Requirements

- For wiring section "Wiring", page 12, please comply with local regulations.
- The maximum wire gauge should not exceed 10 mm² (AWG 7).
- Two types of wire as recommended when connecting the charging station to the power supply:
  - To use flexible cables.
  - To use rigid cable.

EVH5A22N400F installations

	Distribution board	**Undervoltage Release (iMNx)**
Diameter	5 x 10 mm² (*5 x AWG 7*) *(Type U1000R2V 5G)*/3 x 10 mm² (*3 x AWG 7) (Type U1000R2V 3G)*	2 x 0.5 mm² (*2 x AWG 20*)
Length	< 50 meters (*164 ft*)	< 30 meters (*98 ft*)

5 Electrical Diagram

220-240V 1-phase

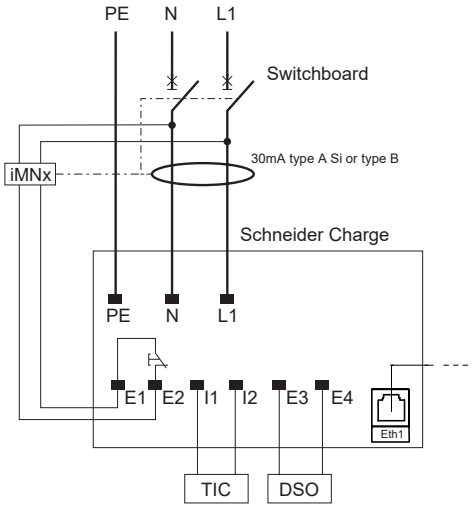

380-415V 3-phase

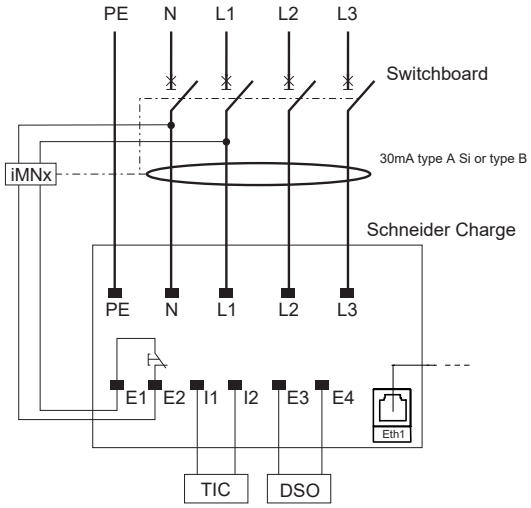

Ensure that the grounding wire is reliably connected.

220-240V 1-phase No Neutral*

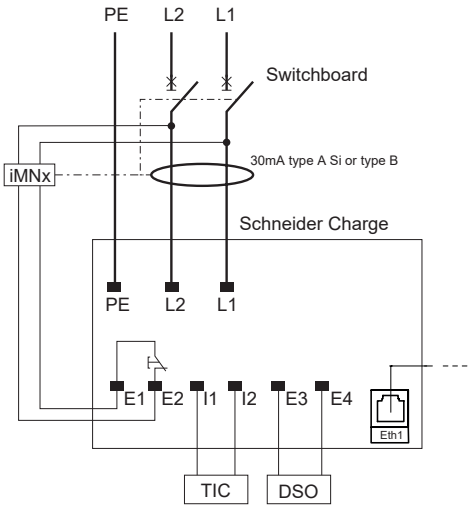

* For application in IT power grid

Ensure that the grounding wire is reliably connected.

iMNx: Undervoltage release

6 Installation

6.1 Equipment Supplied by User

M6 Dowels

4x

M6 Screws

4x

M6 Washers

4x

Ferrules

6.2 Tools Supplied by User

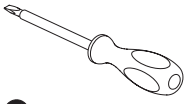

2 mm/0,8 in
4 mm/1,6 in

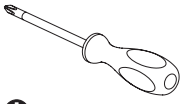

PH2

0,5 Nm - 3,5 Nm
Torque driver

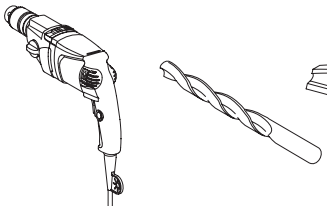

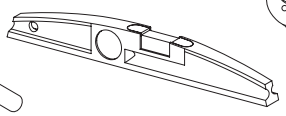

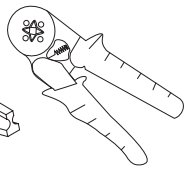

⚠⚠ DANGER

HAZARD OF ELECTRIC SHOCK, EXPLOSION OR ARC FLASH
Do not install the charging station in explosive environment.
Failure to follow these instructions will result in death or serious injury.

⚠⚠ WARNING

RISK OF DAMAGING THE CHARGING STATION
- Do not perform the installation outside in rainy weather without protection from the rain.
- Protect the charging station from dust and water while fixing the bracket.
- Attach the charging station to a flat surface.
- Use screws, washers and wall plugs suitable for the wall material.
- Screw head thickness should be less than 5.5 mm.

Failure to follow these instructions could result in death, serious injury, or equipment damage.

6.3 Wall Mounting

NOTICE

RISK OF UNSTABLE MOUNTING
- The wall must be vertical with a tolerance of no more than 5 mm.
- The fixing system (dowels) must be adapted to the wall and the weight of the product.
- Ensure there is enough space on right side of mounting position to operate side button and observe side LED.

Failure to follow these instructions could result in equipment damage.

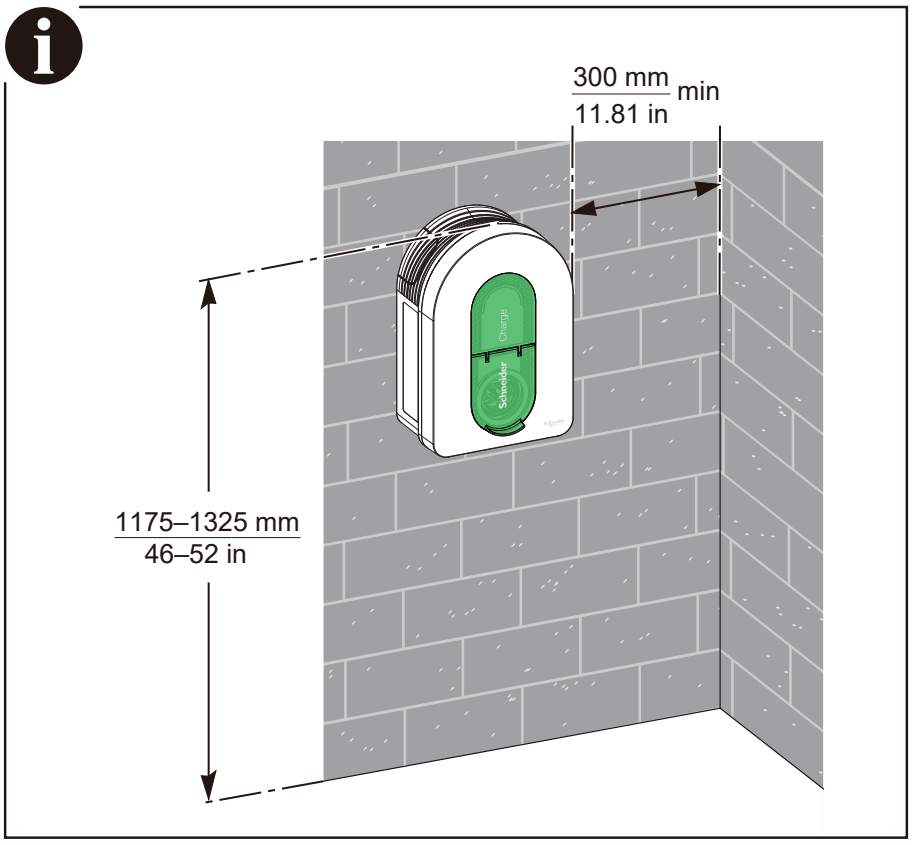

6.3 Wall Mounting

Cable entry from the bottom

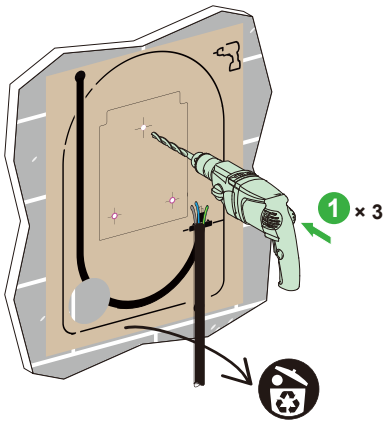

Cable entry through the wall

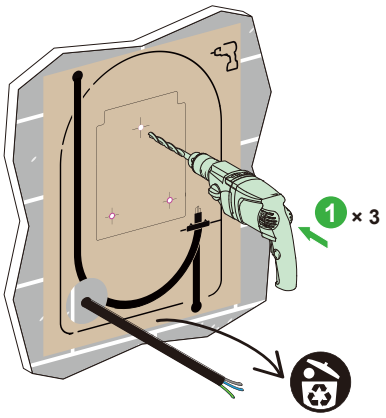

Cable entry from the top

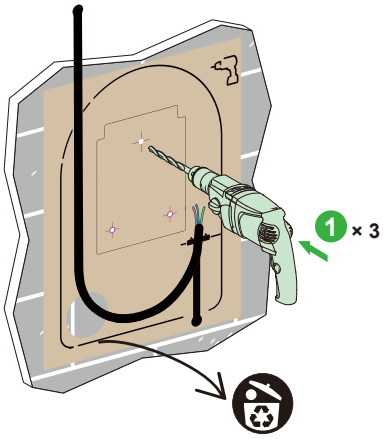

Use spacers if your wall is irregular.

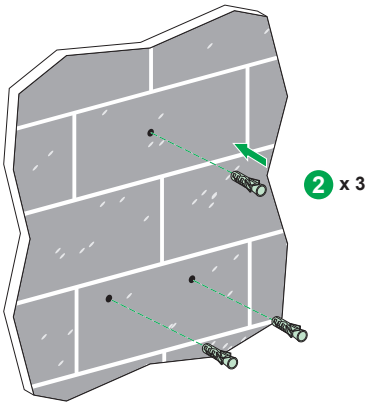

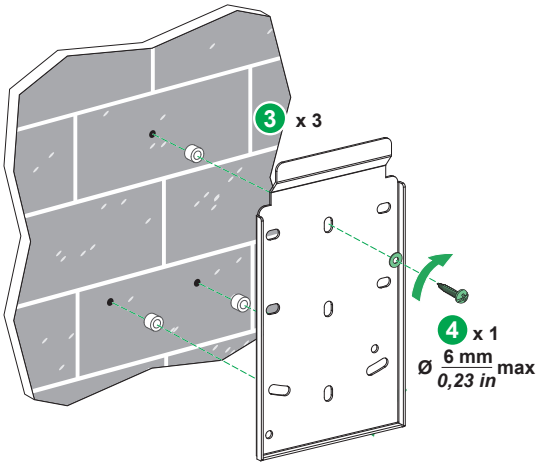

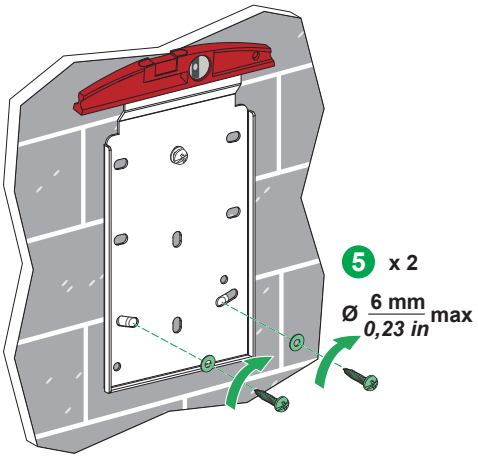

6.3 Wall Mounting

If the power cable enters from the top, please open this knock-down hole.

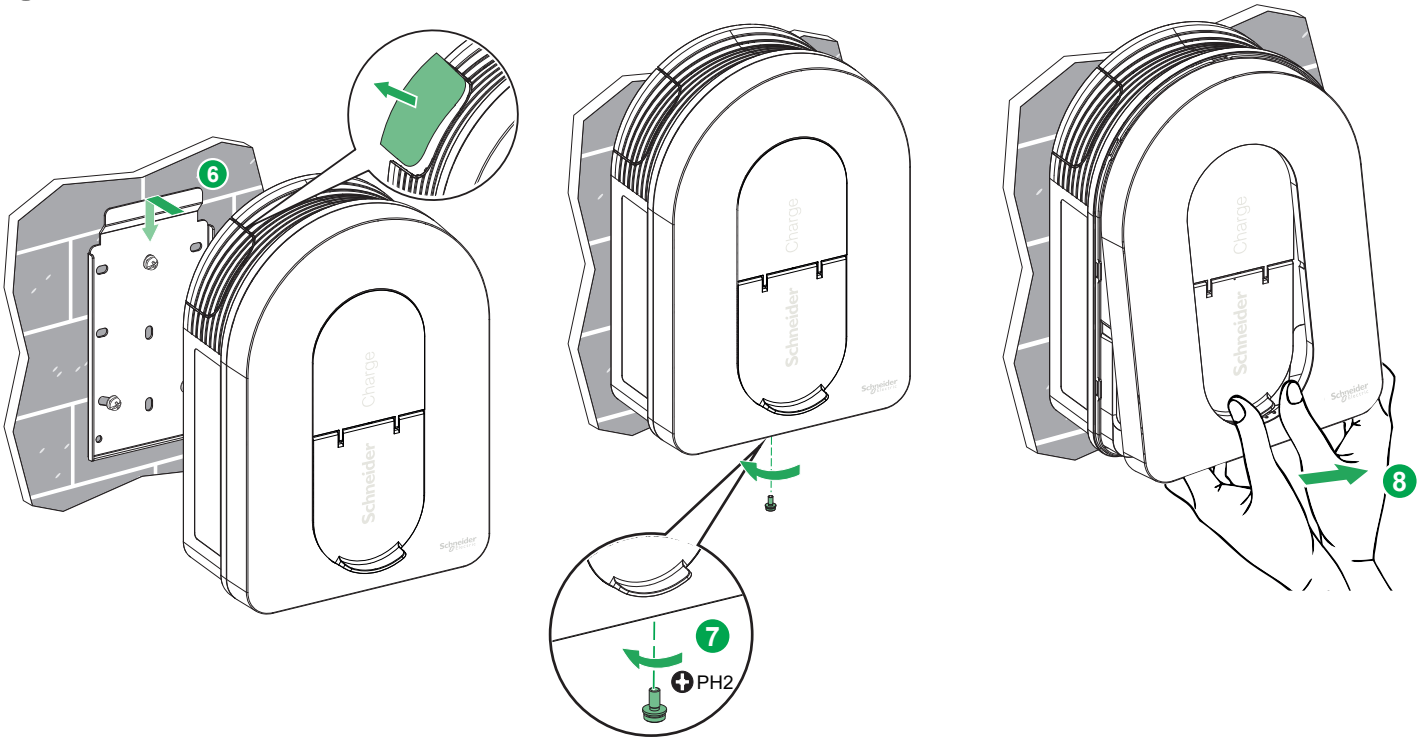

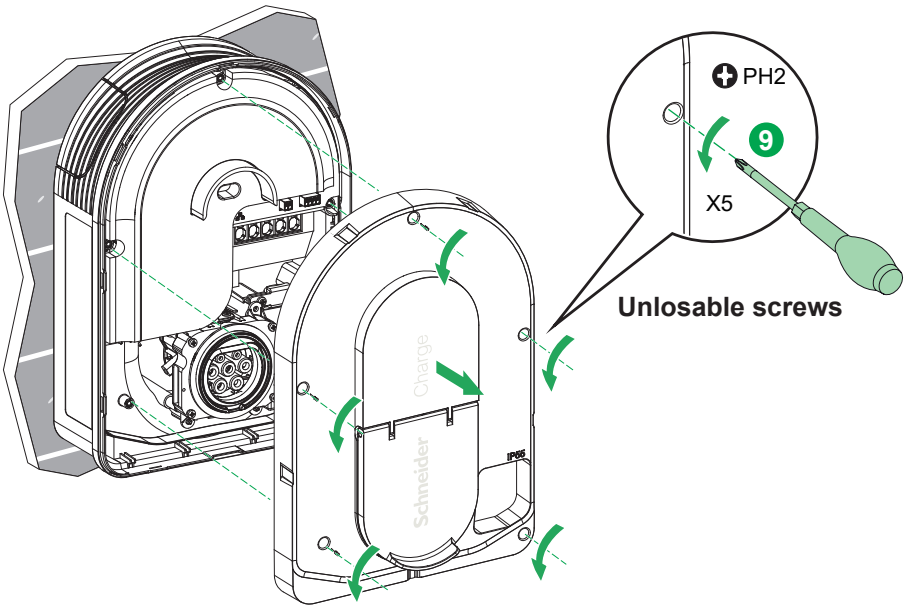

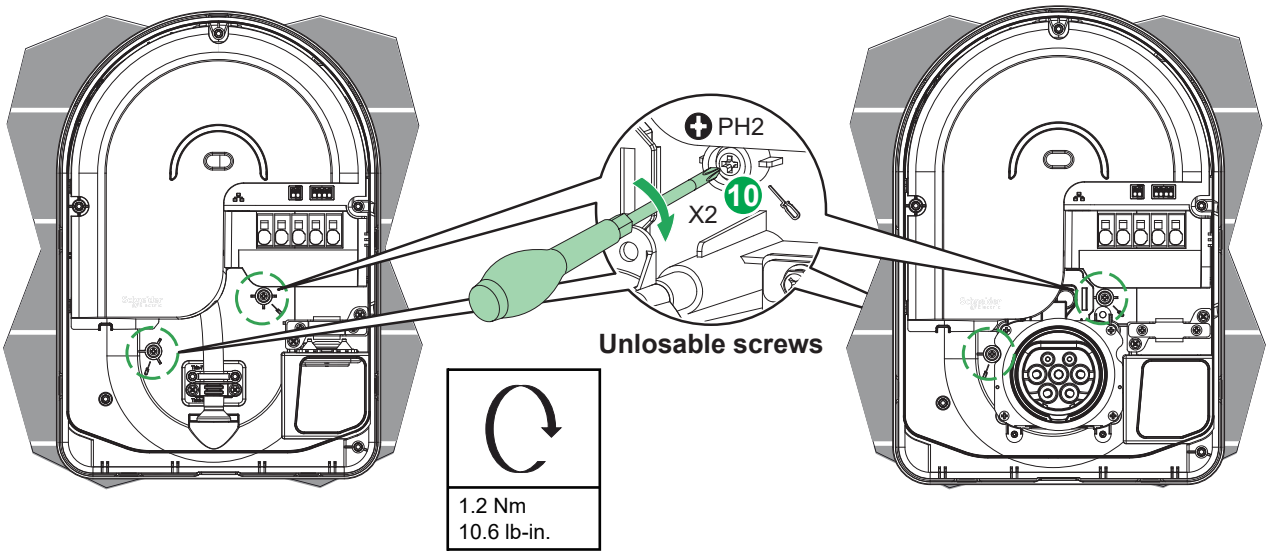

6.4 Wiring

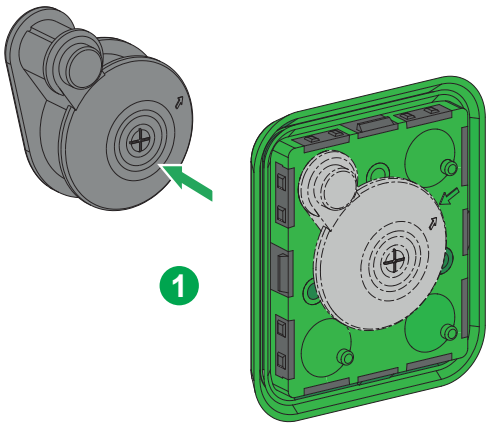

Choose 1 gasket according to power cable diameter.
If gasket-small is chosen, cut the hole size according to your cable diameter.

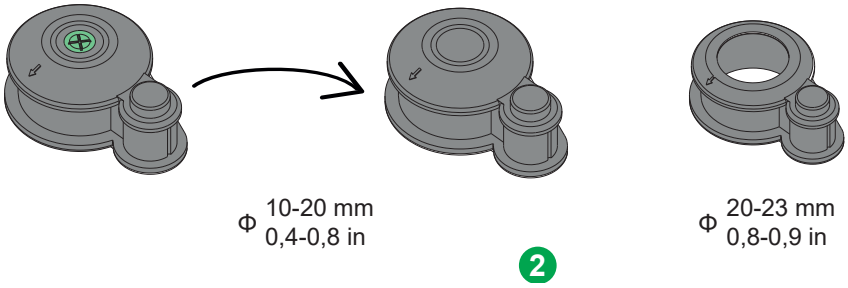

Skip step 3-7, 11 if no use of Ethernet cable.

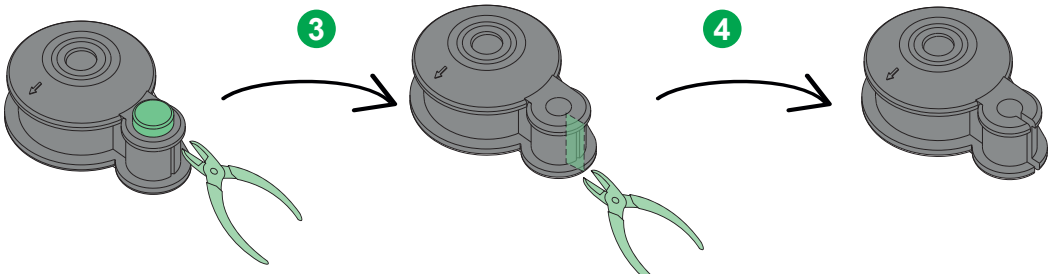

Do not reverse gasket direction.

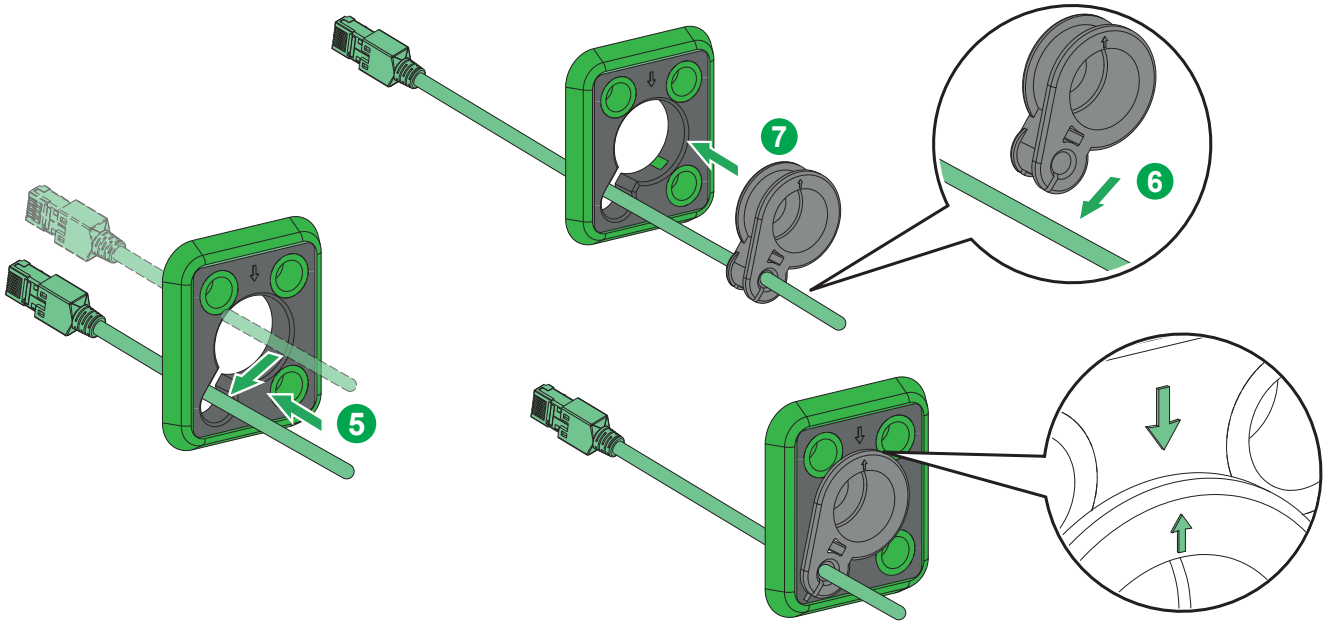

6.4 Wiring

Skip step 8 if no use of iMNx/TIC/DSO.

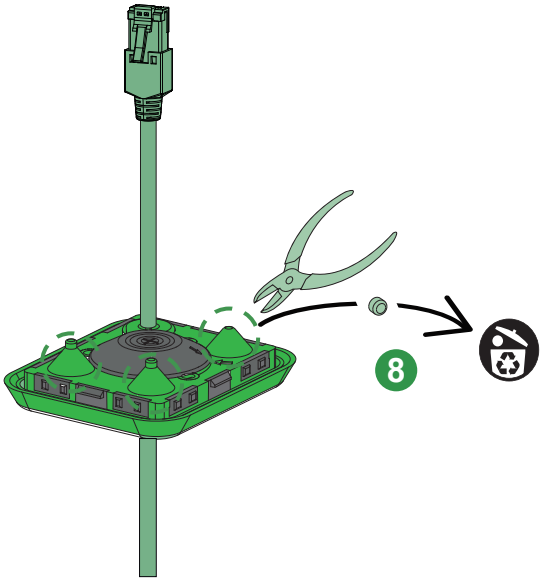

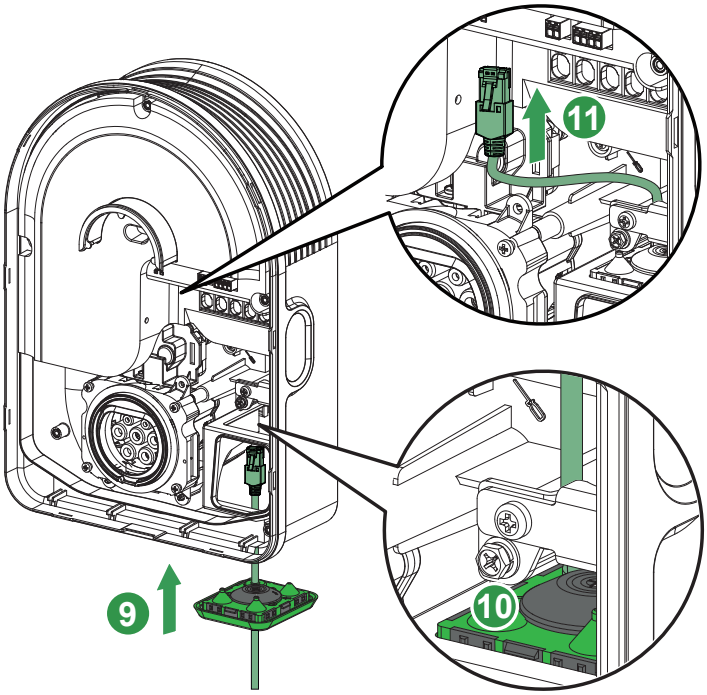

Routing of cables

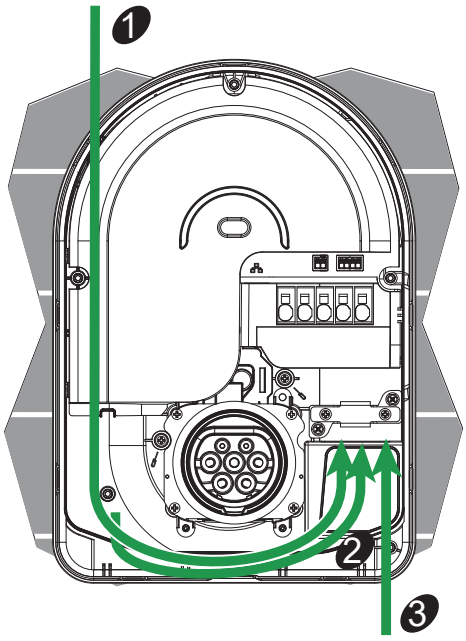

Three cabling scenarios

1. Cable entry from the top
2. Cable entry through the wall
3. Cable entry from the bottom

6.4 Wiring

In the case of scenarios ❶ and ❷, the possibility and routing are determined by the bending radius of the cable.

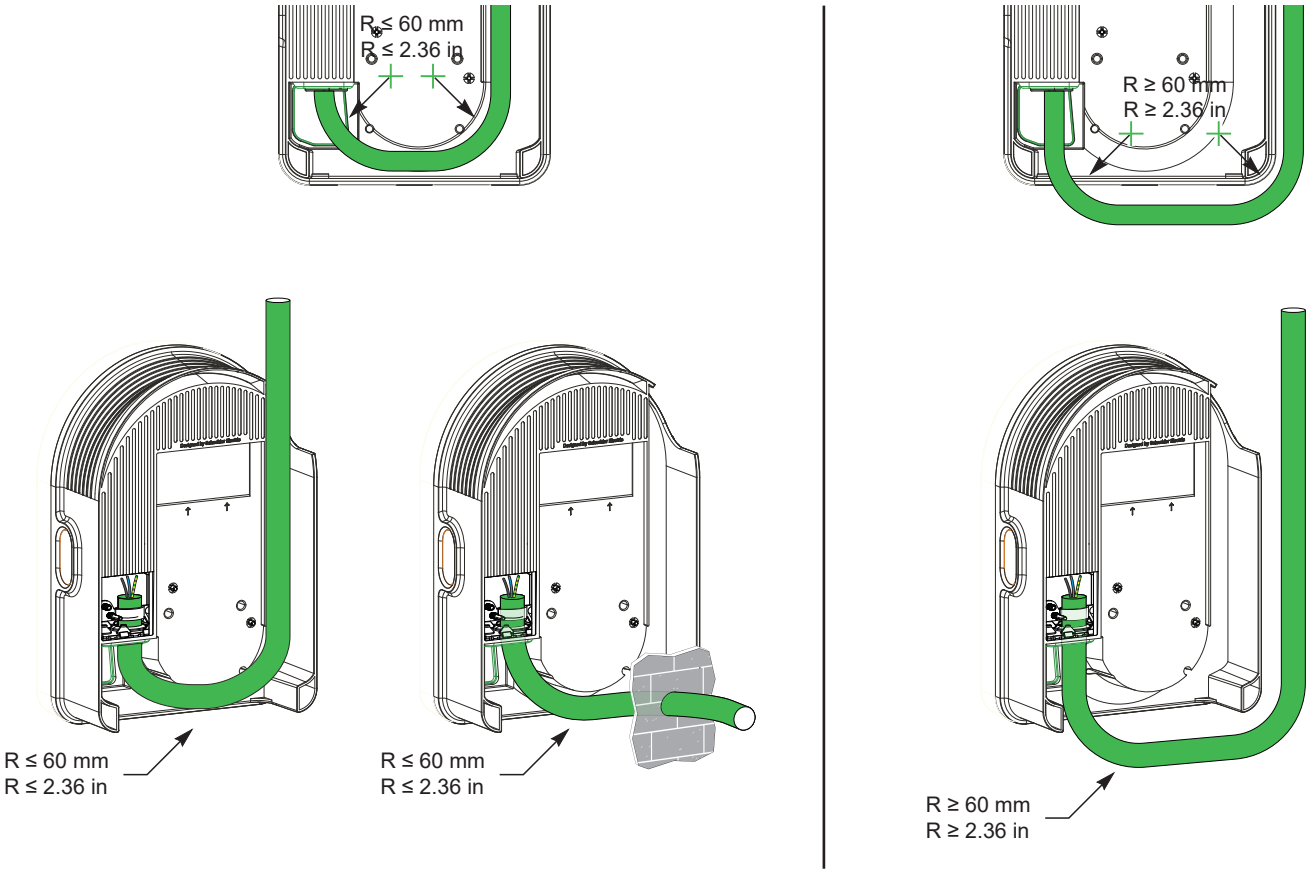

Cable diameter: 10-20mm

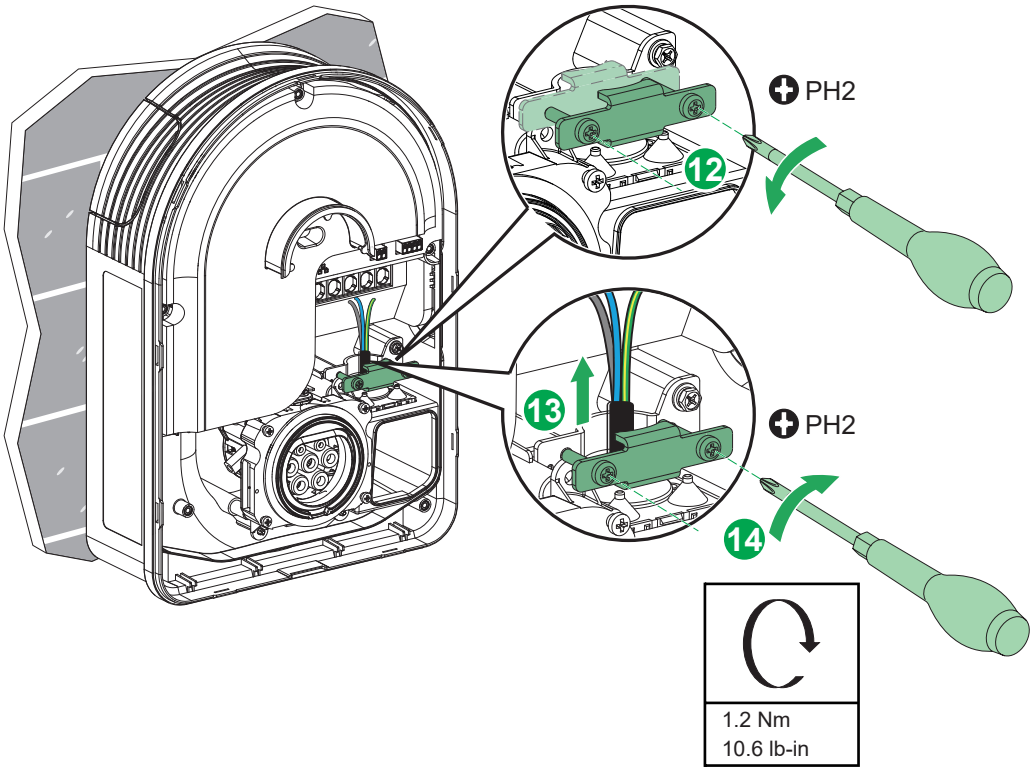

Cable diameter: 20-23mm

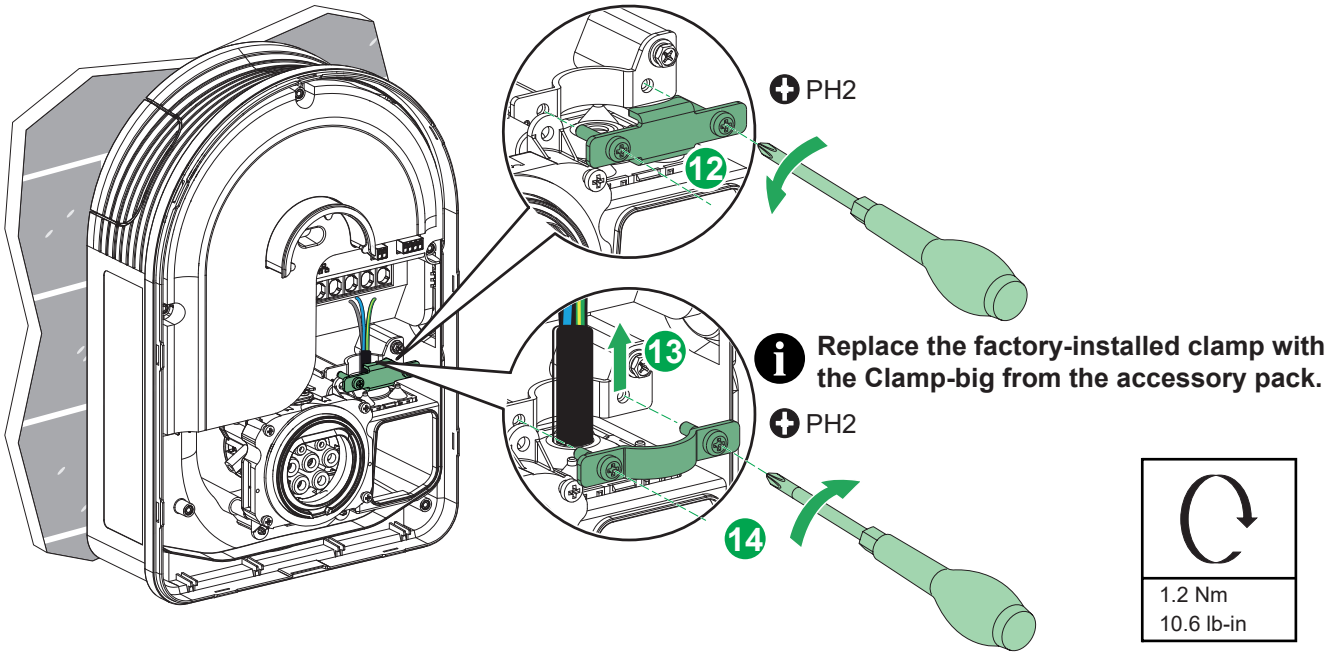

Cable connection type	Cable section	
Flexible cable	2,5-10 mm² *AWG 13,2-7*	19 mm *0,75 in*
Rigid cable	2,5-10 mm² *AWG 13,2-7*	19 mm *0,75 in*

6.4 Wiring

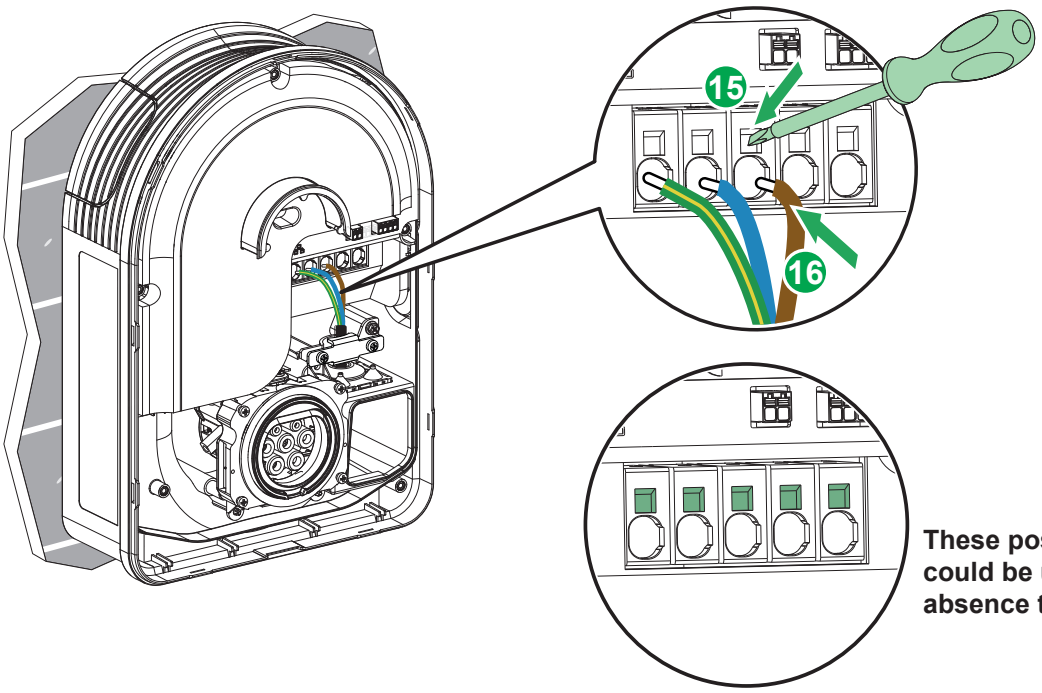

These position-windows could be used by Voltage absence tester (VAT).

iMNX/TIC/DSO wiring

NOTICE

INOPERABLE EQUIPMENT

- DSO terminals must only be connected to dry contacts without voltage.
- iMNx terminals from the charging station must only be connected to E1 E2 iMNx or MNx terminals, excluding any other tripping device.

Failure to follow these instructions could result in equipment damage.

Skip step 17-19 if no use of iMNX/TIC/DSO.

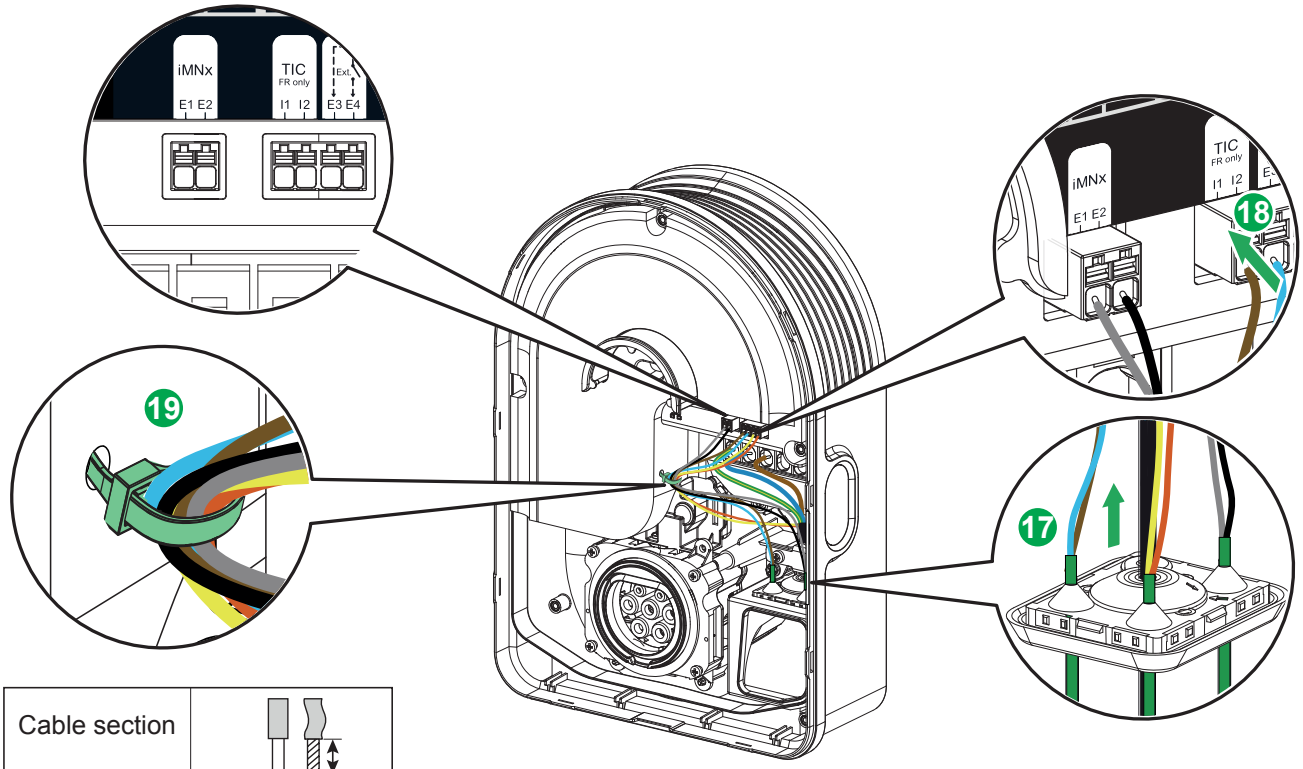

Cable section	
≤1,5 mm² *≤AWG 15*	9 mm² *0,35 in*

6.4 Wiring

Select a safety label to install according to the required language.

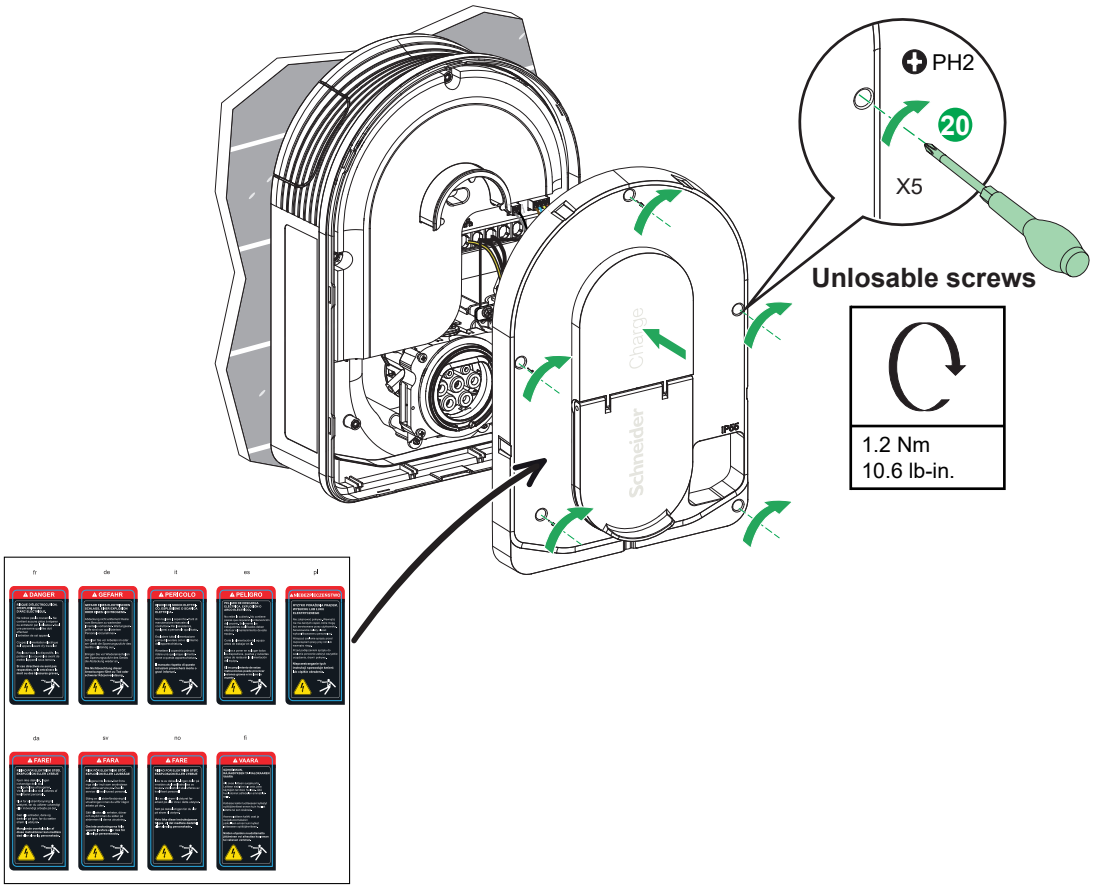

In case of loss of the screw, an another piece is delivered in the accessories box.

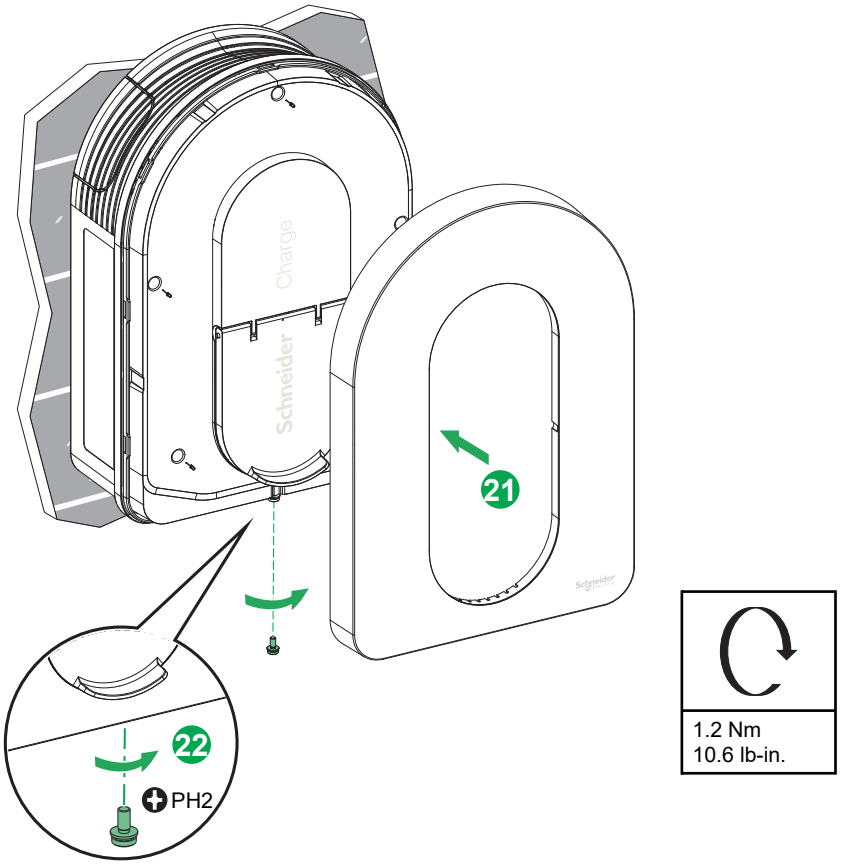

7 Connection

⚠⚠ DANGER

HAZARD OF ELECTRIC SHOCK, EXPLOSION OR ARC FLASH

- Disconnect the mains power supply before working on the charging station.
- Use a Voltage Tester of appropriate rating.
- Do not turn on the charging station if the earth resistance measured is higher than the threshold defined in the enforceable regulations.
- Connection to an Undervoltage release (iMNx). It is not supplied with the charging station.
- Do not connect to an IT earthing system if the voltage exceeds 240Vac
- Install the over-current and residual current protections upstream of charging station.
- Do not use a system which automatically resets the residual current circuit breaker.

Failure to follow these instructions will result in death or serious injury.

7.1 Wire-up Signal Line

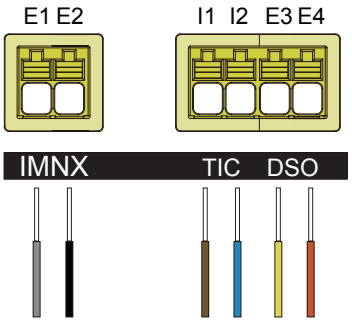

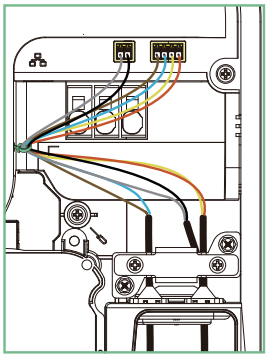

7.2 Wire-up Power Supply

220-240V AC 1-phase

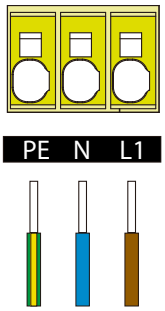

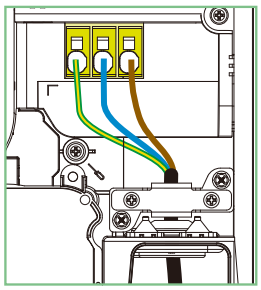

380-415V AC 3-phase

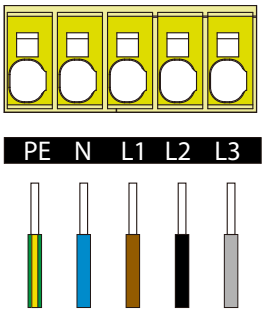

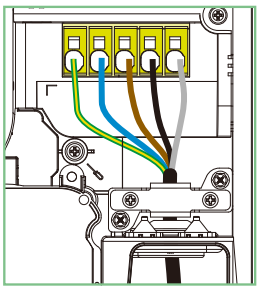

When power supply is single-phase, please follow the wiring method with 1-phase Schneider Charge.

220-240V AC 1-phase No Neutral*

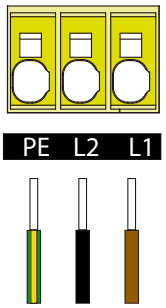

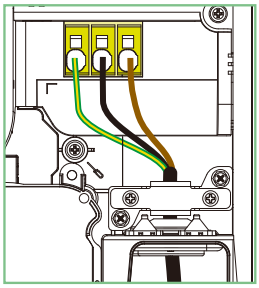

* For application in IT power grid

8 Inspection

⚠ ⚠ DANGER

HAZARD OF ELECTRIC SHOCK, EXPLOSION OR ARC FLASH
Wear suitable personal protective equipment (PPE) and follow all safety procedures.
Failure to follow these instructions will result in death or serious injury.

- Check that the inspection hatch is correctly screwed down.
- Ensure that the power cable is securely fastened by the crimping collar.
- Check that the cover of the charging station is intact and hasn't suffered any obvious mechanical damage or deformation.
- Check that the charging station is securely fastened to the wall.
- Check that nothing is impeding the connection of the charging cable to the charging station socket.

Note: If the maximum current of the charging station is reduced to less than 32A in the eSetup/Wiser application, this new current value must be visible on the charging station to comply with the NF C 15-100 standard.

9 Energy Management (For Schneider Charge with TIC Function)

- The charging station is fitted with a TIC input (Tele-Information Consumer) enabling it to be connected to French utility electronic meters (former electronic meters and new Linky meters).
- The TIC link is to be wired to the terminal block I1-I2.
- The TIC interface is intended to limit the power consumed by the car when the power requested is greater than the power available in the installation (utility meter or connection circuit-breaker) when the overall consumption of the home is close to the subscribed power. The TIC interface serves to avoid the tripping of the main circuit breaker when the overall electrical consumption of the home is close to the subscribed power. In some cases the TIC interface can completely stop the EV charging, to avoid a power outage of your home electrical supply.
- Only one charging station can be interfaced with the meter. No manual setting is needed. As per the information provided by the TIC interface - instant overall current and subscribed current value - the charging station calculates the maximum charging current value available for the electric vehicle and automatically adjusts the maximum charging current setpoint value given to the vehicle. When the value gets lower than the minimum acceptable by the vehicle the charging process is suspended and will resume as soon as possible.
- Each time the TIC output of the meter cannot be easily reached a TIC simulator can be used. Please refer to its documentation to know how to install it and operate it. The TIC simulator can also be used outside France regardless of the utility meter, in countries where there is a limited (subscribed) power at home. Please check the TIC simulator documentation to confirm the feasibility. Also, it is recommended to use anti-tripping module if TIC is not available.

10 Commissioning with Application

10.1 Commissioning with eSetup Application

Prerequisites

Material needed: Ethernet cable, Wi-Fi repeater, iOS or Android smartphone

☐ **Wire the charging station**

In case a load management option must be used, it is preferable to install it before starting the commissioning.
Refer to the anti-tripping module user manual.

☐ **Check the connection to the domestic network (internet router)**

It is recommended to use a wired Ethernet connection when the Schneider Charge is located outdoors or beyond the internet router's or Wi-Fi repeater's range.
For Wi-Fi connection, make sure that the Wi-Fi is 2.4 GHz and check the Wi-Fi signal strength.

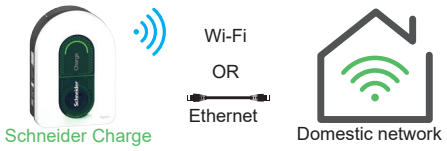

☐ **Download the eSetup for electrician application on your smartphone**

☐ **Check your smartphone permissions**

- Go to Settings > Privacy & Security > Location Services. Make sure that Location Services is on.
- Go to Location and make sure that Precise location is on.
- For iPhone, Go to Setting > Privacy & Security > Local Network and make sure that Local Network for eSetup is on.
- Enable Wi-Fi on your smartphone.

☐ **Download the latest firmware version**

The firmware of the charging station must be up to date before performing the commissioning.
Download the latest firmware version of the charging station in the Firmware Manager of the eSetup application.

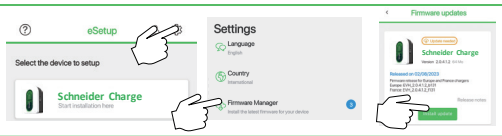

10.1.1 Connect & Update

1 Charging station initialization

Power ON the charging station.
It takes 30 seconds to be ready.
The front indicator light turns from solid white to solid green.

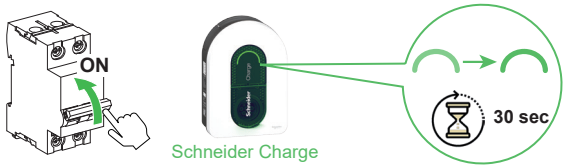

2 Charging station Wi-Fi access point activation

When the side indicator light is solid green, press the side button for 5 seconds. If the side indicator light is Off, power the charging station Off and then back On to re-activate the side button.

The side indicator light blinks green when the Wi-Fi access point of the charging station is activated for commissioning.

The front indicator light breathes green during the commissioning.

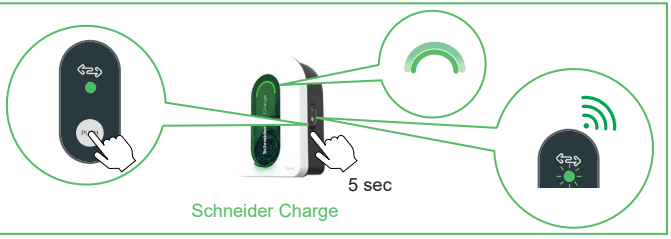

3 Commissioning application launch

Open the eSetup for electrician application and select Schneider Charge in the menu.

Accept permission requests on your smartphone (see prerequisites).

4 Connection to charging station Wi-Fi access point

Scan the QR code on the Wi-Fi access point sticker with your camera,
or
Select Schneider Charge in the Wi-Fi settings of your smartphone and enter the charging station Wi-Fi password manually.
Remove the sticker when finished and keep the Wi-Fi information in a safe place.

5 Cybersecurity of the charging station

Create and confirm your charging station PIN code.
Write it down in the user manual so that it is not lost.

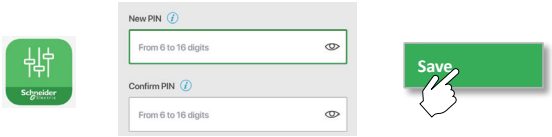

6 Firmware update

If the charging station firmware is not up to date, continue to do the upgrade.
- The front indicator light blinks green during the upgrade.
- The charging station automatically restarts and configures the new firmware.
- The front indicator light breathes green when ready to continue the commissioning.

Do not power off the charging station during the upgrade process.

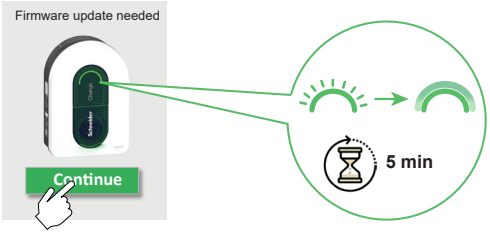

10 Commissioning with Application

10.1.2 Configure Electrical Settings

7 Connection to the charging station

The front indicator light breathes green when the charging station Wi-Fi access point is ready for commissioning. If not, go back to step 2.
Log in with the PIN code to reconnect to the charging station.
In case the PIN code is lost, a new one can be created by clicking on "Reset PIN code" and following the instructions in eSetup.

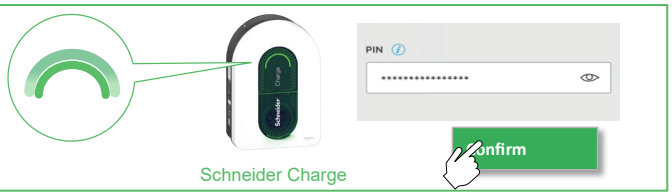

8 Electrical settings

Adjust the value to set the maximum current that will be provided to the electric vehicle during the charge.
In case a load management solution is used (anti-tripping module) then the charging station will dynamically adjust the charging power to avoid tripping the house.

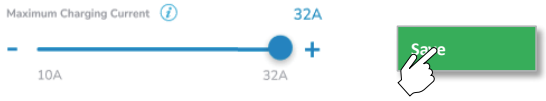

10.1.3 Pre-configure the Smart Charging Application (Optional)

9 Connection to the smart charging application

In eSetup application, tap on the toggle to enable the pre-configuration of the charging station for the connection to the smart charging application.

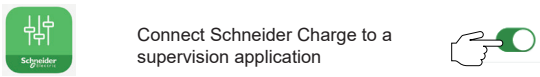

10 Connectivity to the domestic network

Select the mode of connectivity to the domestic network:
- Wi-Fi
- Ethernet

For Wi-Fi connection, make sure that the Wi-Fi of the internet router is 2.4 GHz and check the Wi-Fi signal strength. Add a Wi-Fi repeater if needed.

11 Network Settings of the domestic network (internet router)

For connection to the internet router with Wi-Fi:
- scan the internet router QR code,
- or enter the router Wi-Fi name and password manually.

Click the save button. The charging station checks the connection to the internet router. If not successful, check the internet router Wi-Fi signal strength, name and password.

12 Smart charging application settings

In eSetup application, confirm or configure the smart charging application for the user.

Please see section "Connection to a smart charging application" below for details.

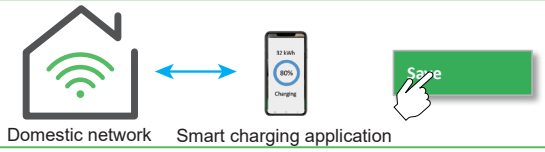

10.1.4 Finalize

13 Handover

Send the report to the client by SMS or email.
It contains information for the client to connect to the smart charging application and to reconnect to the charging station whenever needed.
The Charge Point Identification number (CPID) might be requested to the end user by the smart charging application.
The CPID number can be found in the report or on the label on the side of the charging station.

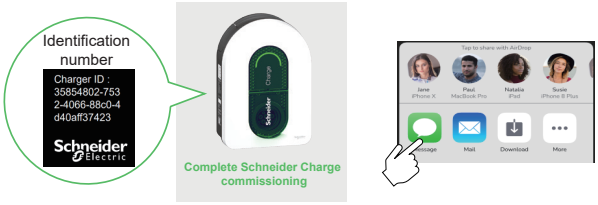

14 Restart the charging station

At the end of the commissioning, the charging station automatically restarts to validate the new settings.
When a smart charging application is selected, the front indicator light turns solid green when the charging station is connected to the internet router.
If the front indicator light is still breathing orange after 1 minute, please refer to the troubleshooting section in the user manual.

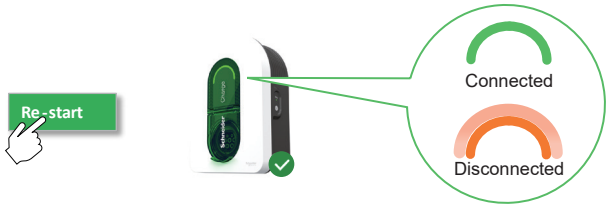

10.1.5 Ready to Operate

Ready to use!

The charging station is now ready to charge an electric vehicle!
When a smart charging application is pre-configured, the charging station can then be connected to the smart charging application account of the client.

10.2 Commissioning with Wiser Home Application

Prerequisites

Material needed: Ethernet cable, Wi-Fi repeater, iOS or Android smartphone

☐ **Wire the charging station**

In case a load management option must be used, it is preferable to install it before starting the commissioning.
Refer to the anti-tripping module user manual.

☐ **Check the connection to the domestic network (internet router)**

It is recommended to use a wired Ethernet connection when the Schneider Charge is located outdoors or beyond the internet router's or Wi-Fi repeater's range.
For Wi-Fi connection, make sure that the Wi-Fi is 2.4 GHz and check the Wi-Fi signal strength.

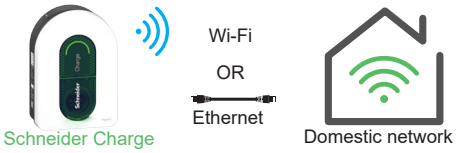

☐ **Download the Wiser Home application on your smartphone**

Wiser Home
ios/Android

10.2.1 Connect & Update

1 Get started and download the latest firmware version

Once started, select "Professional Installer", country or region, and "Schneider Charge" respectively.
Download the latest firmware version of the charging station to your mobile phone.

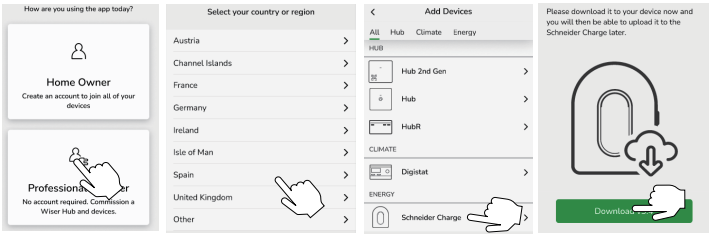

2 Connect to Wi-Fi direct

Click "Start setup" after download is successful.
Turn off the device through the circuit breaker. Wait 10 seconds, then power it ON again.
It takes 30 seconds to be ready. The front indicator light turns from solid white to solid green.

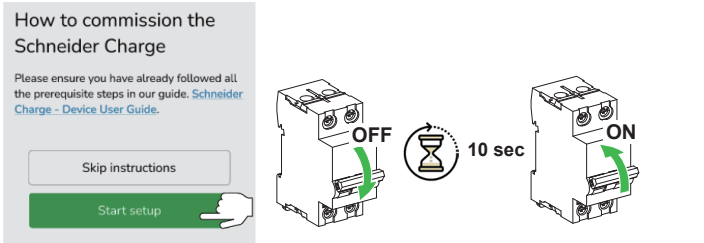

3 Charging station Wi-Fi access point activation

When the side indicator light is solid green, press the side button for 5 seconds. If the side indicator light is Off, power the charging station Off and then back On to re-activate the side button.
The side indicator light blinks green when the Wi-Fi access point of the charging station is activated for commissioning.
The front indicator light breathes green during the commissioning.

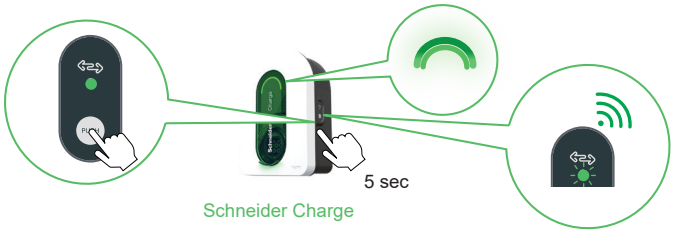

4 Connection to charging station Wi-Fi access point

Click "Open camera" and authorise "Wiser Home" to access to your camera.
Scan the QR code on the Wi-Fi access point sticker with your camera
Remove the sticker when finished and keep the Wi-Fi information in a safe place.

5 Cybersecurity of the charging station

Create and confirm your charging station PIN code. Write it down in the user manual so that it is not lost.
Log in with the PIN code to connect to the charging station.

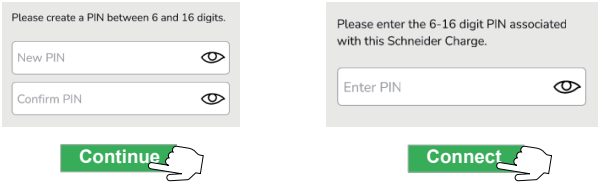

6 Firmware update

If the charging station firmware is not up to date, continue to do the upgrade.
- The front indicator light blinks green during the upgrade.
- The charging station automatically restarts and configures the new firmware.
- The front indicator light breathes green when ready to continue the commissioning.

Do not power off the charging station during the upgrade process.

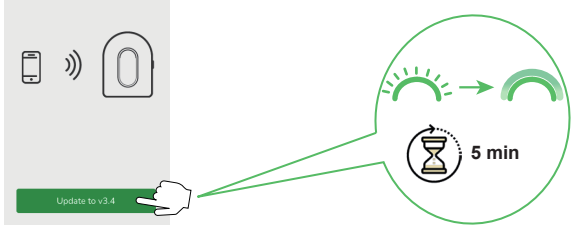

10.2.2 Configure Electrical Settings

7

Connection to the charging station

The front indicator light breathes green when the charging station Wi-Fi access point is ready for commissioning. If not, go back to step 2.
Log in with the PIN code to reconnect to the charging station.
In case the PIN code is lost, a new one can be created by clicking on "Reset PIN code" and following the instructions in Wiser Home.

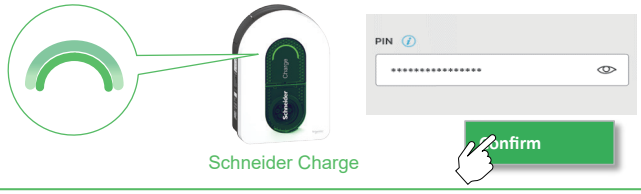

8

Electrical settings

Adjust the value to set the maximum current that will be provided to the electric vehicle during the charge.
In case a load management solution is used (anti-tripping module) then the charging station will dynamically adjust the charging power to avoid tripping the house.

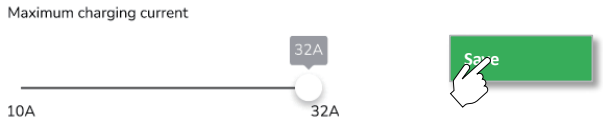

10.2.3 Configure Network Settings (Optional)

9

Connectivity to the home network

Select the mode of connectivity to the home network:
- Wi-Fi
- Ethernet

For Wi-Fi connection, make sure that the Wi-Fi of the internet router is 2.4 GHz and check the Wi-Fi signal strength. Add a Wi-Fi repeater if needed.

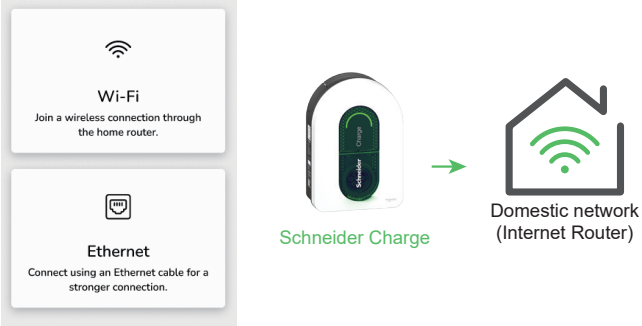

10.2.4 Finalize

10

Restart the charging station

At the end of the commissioning, the charging station automatically restarts to validate the new settings.
When a smart charging application is selected, the front indicator light turns solid green when the charging station is connected to the internet router.
If the front indicator light is still breathing orange after 1 minute, please refer to the troubleshooting section in the user manual.

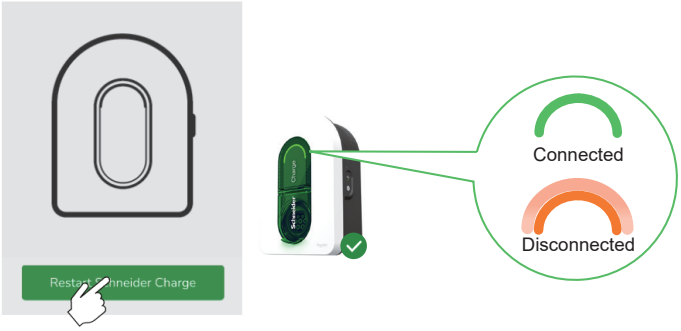

11

Handover

Send the report to the client by SMS or email.
It contains information for the client to connect to the Wiser Home application and to reconnect to the charging station whenever needed.

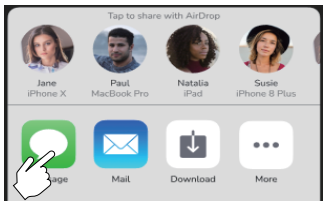

10.2.5 Ready to Operate

Ready to use!

The charging station is now ready to charge an electric vehicle!
When the Wiser Home application is pre-configured, the charging station can then be connected to the Wiser Home application account of the client.
When your Schneider Charge is connected to Wiser Home, you may enable 3rd party services to operate your EV charging station.

11 Operation

⚠ CAUTION

RISK OF INJURY
Do not use any extension cable or adaptor to connect the charging station to the electric vehicle.
Failure to follow these instructions could result in injury, or equipment damage.

11.1 Connecting the Electric Vehicle Charging Station

- Connect the charging cable's plug into the Electric Vehicle charging station's socket.
- Connect the charging cable's connector into the Electric Vehicle's inlet.
- The charge's LED indicator will change from a solid green to pulsing blue.

11.2 Disconnecting the Electric Vehicle

⚠ ⚠ WARNING

RISK OF INJURY
Do not use brute force to unplug the charging connector from the Electric Vehicle as it is mechanically locked .
Failure to follow these instructions could result in death, serious injury, or equipment damage.

- Stop the charging session via the Electric Vehicle to unlock the connector.
- Unplug the charging station's connector from the Electric Vehicle's inlet.
- Wind the charging cable around the Electric Vehicle charging station's winding trough.

11.3 Connection to a Smart Charging Application

When connected to a smart charging application, the charging station can be controlled remotely.
Scheduling and history functions help to optimize the charging cost.
The smart charging application will help to update the software of the charging station for a better charging experience.
Note: some control features might be available in the charging station but not in the smart charging application or vice-versa.

11.3.1 Prerequisites

☐ **Pre-configuration of the charging station**

Make sure that the smart charging application option has been activated during the commissioning with eSetup application (steps 9 to 12 above).
The charging station is then pre-configured with the smart charging application URL address.
If not, contact your electrician or a qualified person.

☐ **Locate the Charge Point Identification number (CPID)**

The identification number of the charging station - or Charge Point Identification number (CPID) - is mentioned in the SMS or email sent to you by the electrician at the end of the commissioning with eSetup application.
It can also be found on the label on the left side of the charging station or by scanning the QR code next to it and by clicking on "+ More details".
The identification number of the charging station will be requested to connect the charging station to the smart charging application.

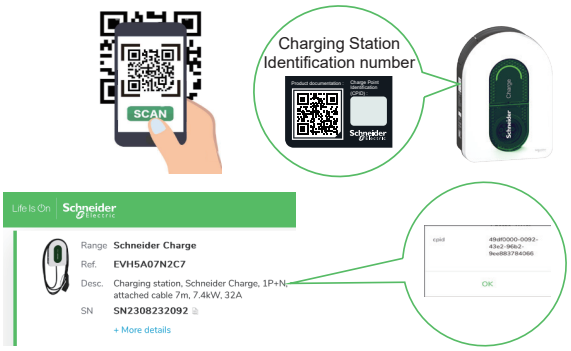

☐ **Connection to domestic network**

Make sure that the charging station is connected to domestic network.
The front indicator light should be solid green.
Refer to the troubleshooting section if needed.

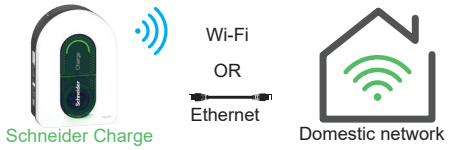

11.3 Connection to a Smart Charging Application

11.3.2 Connect

1

Download the smart charging application

Download the smart charging application on your smartphone **using the links sent to you by the electrician** by SMS or email at the end of the commissioning with eSetup application.
Wiser Home is a free application from Schneider Electric to manage energy and electric vehicle charging at Home in France, Germany, Spain, Australia, Portugal, New Zealand.
Monta is one of the smart charging application available in most countries.
The application to download should correspond to the one pre-configured by your electrician in your charging station.

2

Create a user account

Create a user account in the smart charging application.
Refer to terms of use and on the on-line help in the smart charging application.
Note: Applications other than Wiser Home are non-Schneider Electric applications.

3

Connection of your charging station

Create your charging station in your personal account and connect it using the Charge Point Identification number (CPID).
CPID example: b1820131-9750-41a5-9f87-9a7ebd2f2511
Note: Use the Charge Point Identification number (CPID) to connect with the smart charging application, not the Serial Number!
When using Wiser Home application, simply scan the QR code on the left side of the charging station.

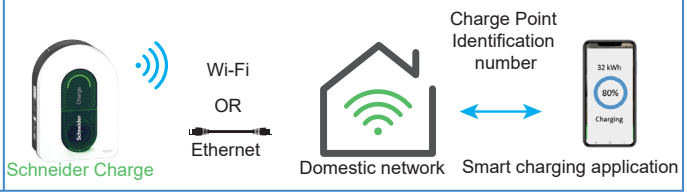

11.3.3 Ready to Operate Remotely

Ready to use!
The charging station is now ready to charge an electric vehicle and operate with its smart charging application!

Reading the full device guide online

- Scan the QR code based on your country or location and choose your language.
  - For complete information about the device, including operation, configuration and using the product with a Wiser system.

12 Reset to Factory

Resetting to factory allows you to return the charging station to its initial state.
It is divided into 2 sub-features

- Configuration reset: all databases and configurations are erased.
  - **PIN code.** Seperate PIN code reset could also been performed in case the PIN code is lost, see section 13 basic troubleshooting.
  - **Electrical settings.** Like derating of charging current, TIC setting(France offer only), etc.
  - **Connectivity mode.** After back to factory, the charging station enters a basic mode that allows plug-and-charging function.
  - **Other personal data.**
- All previously paired devices are unpaired.

1. **Restart the charging station**
   - Power on the charging station.
   - It takes 30 seconds to be ready.
   - The side indicator light turns solid green.

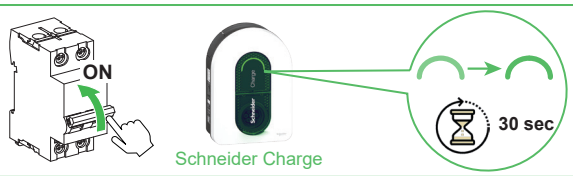

2. **Start the Reset Process**
   - Press and hold the side button for a minimum of 20 seconds.

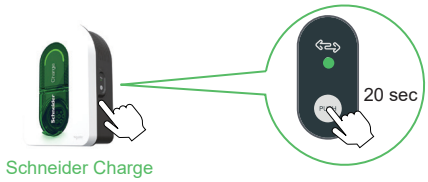

3. **Watch for side LED Indicators**
   Three steps:
   - Blinking green
   - Blinking red (reset to factory preparing)
   - Solid red (reset to factory in progress)

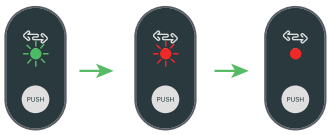

4. **Wait for Restart**
   - Charging station will automatically restart, the front indicator light turns white.
   - Once restarted, the factory reset is complete, the front indicator light turns white.

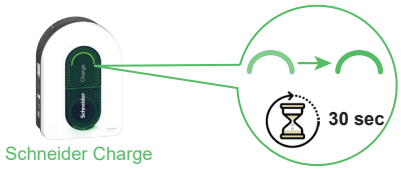

Note:

- This operation should be performed with a continuous button press for twenty seconds. If released within twenty seconds, a factory reset will not be triggered.

13 Charging Station Indicators

Front Indicator Light		Charging station status
	Solid White	Restart of the charging station - Please wait!
	Breathing Green	Wi-Fi access point activated for commissioning
	Blinking Green	Firmware upgrade on going - Please wait!
	Solid Green	Ready **Note:** when the charging station is in "standby" for more than 5 minutes, the front LED will enter low power mode (10% intensity) automatically. This feature was updated from firmware version 1.13.4 (release date 2024/7/22). Upgrade firmware version via the commissioning application (Wiser Home or eSetup) if needed.
	Breathing Blue	Charging on going
	Blinking Blue	Charge suspension by the smart charging application or lack of remaining power in the house
	Solid Blue	Charge suspension by electric vehicle or battery full or charging session preparation or DSO input
	Breathing Orange	Not connected to the smart charging application when connectivity configured
	Solid Orange	Locked
	Solid Red	Stop/Error - Refer to trouble shooting section

Side indicator light		Charging station status
	No light	PUSH button not activated - Power off and then back on the charging station to activate it
	Solid Green	Ready to activate Wi-Fi access point for commissioning/ Ready to enter in pairing mode with anti-tripping module (peak controller)
	Blinking Green	Wi-Fi access point activated for commissioning
	Blinking Blue	Pairing mode with anti-tripping module (peak controller) activated
	Blinking Red	Anti-tripping module power line conmunication lost or reset to factory preparing
	Solid Red	The factory reset in progress

14 Basic Troubleshooting

Symptom		Possible causes and solutions
	Connector plugged into electric vehicle but not charging, LED illuminated solid green	■ Verify that the connector was inserted properly by unplugging and plugging it back into the electric vehicle's socket. ■ Verify the charging sequence by following the procedure described in section "Operation".
	Connector plugged into electric vehicle but not charging, LED illuminated blinking blue	■ Verify that you do not have a schedule in progress through the smart charging application that prevents charging the car. ■ In case you have installed an anti-tripping module. The anti-tripping module limits the maximum power draw of the Schneider Charge and can completely stop the charge to avoid a power outage of your home electrical supply under all conditions. Reduce the home load to have at least 9A current available per phase to restart charging the car. Be sure you have enough power in your electricity subscription for charging the car and for the house loads. You probably need to increase the electricity subscription of your electrical installation.
	Connector plugged into electric vehicle but not charging, LED illuminated solid blue	■ Verify that you do not have a schedule in progress through your car that prevents charging the car.
	Charging station's LED breathing orange	■ Restart the Schneider Charge. ■ The Schneider Charge is not connected to the domestic network when using Wi-Fi: □ Verify that you have connected the Schneider Charge to a 2.4 GHz Wi-Fi with WPA2 password. For the last generation of internet box, in some cases, you need to create 2.4Ghz Wi-Fi network. Check or contact your internet provider for more information on how to create this network. □ Verify that the Wi-Fi name and password are correct. □ In case the Wi-Fi signal is too weak: connect the charging station with Ethernet cable, or add a Wi-Fi repeater. ■ Verify that internet router is working properly.
	Charging station's LED illuminated red	■ Switch off the power supply to the charging station, unplug the connector from the electric vehicle, reconnect the power supply, wait for the charging station to become ready (LED illuminated solid green), before reconnecting the connector to the electric vehicle. In case of recurrence, please contact Schneider Electric's Customer Care Centre.
	Charging station's LED off	■ No power supply. Verify that the cabling is correct and that circuit breaker did not trip. ■ Otherwise, switch off the power supply to the charging station, The charging station is possibly damaged. Please contact Schneider Electric's Customer Care Centre.
	Charging station's LED white light flashing and then power off	■ Power supply overvoltage seriously (Voltage more than 300V between phase line and neutral line). Switch off the power supply to the charging station, The charging station is possibly damaged. Please check power voltage.
	QR code sticker for Wi-Fi access point password is lost	■ The Wi-Fi access point password to connect commissioning application (Wiser Home or eSetup) to perform the configuration or modify the settings can be recovered inside the product by removing the front cover.
	PIN code for commissioning application (Wiser Home or eSetup) is lost	■ A new PIN Code can be created by clicking on "Reset PIN code" and follow the instructions in commissioning application (Wiser Home or eSetup).
	Main incomer circuit breaker has tripped	■ Add an anti-tripping module (All countries) or connect the TIC to the meter to allow the load shedder. ■ If the anti-tripping module is already installed, check that the setting is correct and that it is correctly pairred with the charging station: see anti-tripping module user guide. ■ For TIC version : □ Check that the TIC is correctly connected to the charging station by using commissioning application (Wiser Home or eSetup). □ If you have changed your contract from History to Standard, you must restart the charging station to allow the modification in the charging station. It will automatically detect the contract type at each restart.
	Connect the charging station to a smart charging application unsuccessfully	■ When the back-end application requests for the Serial Number, you shall enter the Charge Point Identification number (CPID) that you could find on the side of the charging station.

15 Wireless Feature Declaration

For Europe (where the CE marking is applicable):

Hereby, Schneider Electric Industries, declares that this electric vehicle charging station Schneider Charge is in compliance with the essential requirements and other relevant provisions of Radio Equipment Directives RED 2014/53/EU.
The EU declaration of conformity for Schneider Charge offer can be downloaded on: se.com/docs.

■ Wi-Fi:
- □ Operating frequency bands: 2412 MHz-2472 MHz
- □ Maximal RF output power: less than 20 dBm (18.25 dBm)

16 Recycle

The packaging materials from this equipment can be recycled.
The product and all accessories marked with this symbol are electrical and electronic components that must be disposed of separately from household waste.
Please help protect the environment by disposing waste in appropriate containers.
Thank you for helping to protect the environment.

Schneider Electric Industries SAS
35 Rue Joseph Monier
92500 RUEIL MALMAISON, FRANCE
www.se.com

© 2023-2025 Schneider Electric - All rights reserved.
QR Code is a registered trademark of DENSO WAVE INCORPORATED in Japan and other countries.