Low Voltage

Source changeover systems

Compact NSX100-630, Compact NS630b-1600,
Compact INS/INV, Masterpact

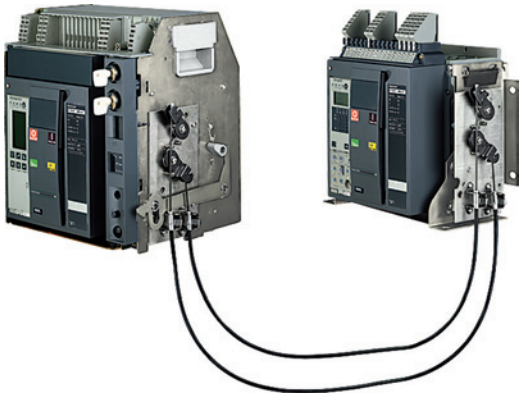

Schneider Electric

• WEB2 cat.2015

Green Premium, stamping the most eco-friendly products of the industry

Green Premium™ Product

Green Premium is the only label allowing you to develop effectively an environmental policy and to promote it, while preserving your business efficiency.

It guarantees compliance with the most up-to-date environmental regulations, but it is more than this.

With Green Premium eco-mark, Schneider Electric helps you:

- Calculate the carbon footprint of the solutions you offer
- Ensure full regulation compliance about substances and chemical components
- Deliver all appropriate information to certify eco-design of your solutions
- Easily manage products end of life, while ensuring optimized recycling.

With Green Premium, Schneider Electric commits to be transparent disclosing extensive and reliable information on environmental impacts of its products:

RoHS

Schneider Electric applies RoHS requirements to all its products and worldwide, even for the numerous ones which are not in the scope of the regulation. Compliance certificates are available for all products involved.

REACh

Schneider Electric applies REACh regulation worldwide, and releases all information about presence of Substances of Very High-Concern (SVHC) in its products.

PEP: Product Environmental Profile

For all its products, Schneider Electric publishes the most complete set of environmental data, including carbon footprint and energy consumption for each of the life cycle phases, in compliance with ISO 14025 PEPecopassport program.

EoLI: End of Life Instructions

Available at a click, these documents provide:

- Recyclability rates of the products
- Information to mitigate personnel hazards during dismantling and before recycling operations
- Parts identification either for re-use, or for selective treatment to mitigate environmental hazards, or incompatibility with usual recycling process.

Discover what we mean by green ....
and
Check a product!

A source-changeover system is indispensable:

For critical applications
in particular

For all others
in general

A source-changeover system is indispensable for applications that need a continuous supply of electric power (hospitals, airports, banks, government facilities, etc.).

But a source-changeover system is also suitable for all LV electrical installations exposed to:

> **Nominal voltage loss or dip (when there is high demand for electric power)**

> **Unpredictable power quality**

> **Frequent power cuts.**

These factors, and many others, can damage the continuity of service of your electrical installation.

For infrastructure managers, a source-changeover system gives direct economic benefits: it is possible to select your source based on power cost.
In this case, the replacement source is used as an alternative, more economical source.

Managing energy efficiently

Power Cost

Safety

Where backup supply must be reliable: now that is everywhere.

Electricity is the fuel that feeds economic activity. Very few operations can withstand the financial impact of an electrical stoppage.

For occupant comfort, business continuity, and worker/visitor safety, dependability levels which used to apply to hospitals or airports are now becoming required in shopping malls and offices.

Additionally, utility companies make their contracts more sophisticated to deal with energy concerns: for example, by including time restrictions to total accessible power.

For these reasons, backup power sources expand across all types of buildings, and require high performance connection and management.

Enabling you to meet these challenges, Schneider Electric source-changeover system comes as the natural continuation of the world leading low voltage distribution system developed by Schneider Electric.

> $1M/hr

average loss ratio for data centers without power

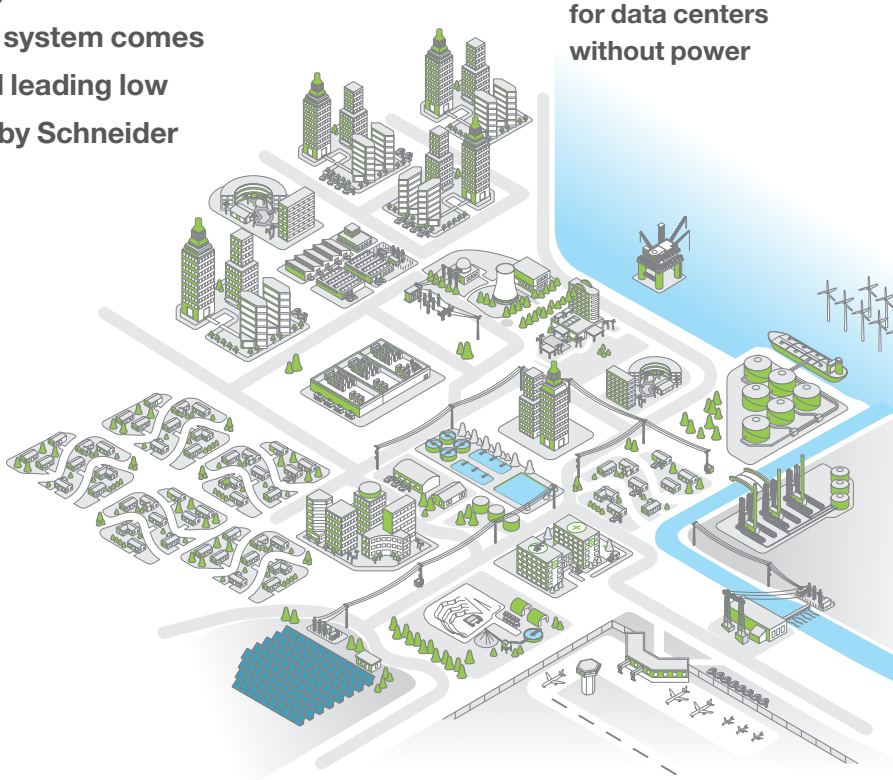

Efficient energy management and continuity of service with source-changeover system

To ensure continuity of service for critical applications, LV electrical installations need to be connected to at least **two independent power sources:**

1. **A normal source (N)**

2. **And a replacement source (R)***
   used to supply energy to the installation when the normal source unavailable, or, for instance, when its quality and/or availability is no longer guaranteed.

The source-changeover system switches the load (partly or fully) between these two sources.

A few basics on source-changeover systems

> A source-changeover system **can be automated to manage transfers according to external conditions.**

> Switching from a main power source to a replacement source **can be performed either manually or automatically.**

> A source-changeover system **comprises circuit breakers, switch-disconnectors or contactors.**

** The replacement source (R) can be: a second power source (with possibly different characteristics from the normal source) or an electrical generator*

3 ways to switch the load to meet your needs

1 Manual source-changeover system

(or MTSE: Manual Transfer Switching Equipment)

The simplest way to switch the load. It is controlled manually by an operator. The time required to switch from the 'N' source to 'R' source can vary.

System

2 or 3 mechanically interlocked manually-operated circuit breakers or 2 switch-disconnectors.

Applications

Buildings and infrastructure where the need for continuity of service is significant but not a priority: offices, small and medium-sized businesses.

2 Remote-operated source-changeover system

(or RTSE: Remote Transfer Switching Equipment)

The most commonly used system for devices with high ratings. No direct human intervention is required. Source-changeover is controlled electrically.

System

2 or 3 circuit breakers that may have different configurations, linked by an electrical interlocking system. In addition, a mechanical interlocking system protects against electrical malfunctions or incorrect manual operations.

Applications

Industry (assembly lines, engine rooms on ships, critical auxiliaries in thermal powerstations, etc.); **Infrastructure** (port and railway installations, runway lighting systems, control systems on military sites, etc.).

3 Automatic source-changeover system

(or ATSE: Automatic Transfer Switching Equipment)

An automatic controller may be added to a remote-operated source-changeover system. It is possible to automatically control source transfer according to programmed (dedicated controllers) or programmable (PLC) operating modes. **These solutions ensure optimum energy management.**

System

2 or 3 circuit breakers that may have different configurations, linked by an electrical interlocking system. A mechanical interlocking system protects against electrical malfunctions or incorrect manual operations, with an automatic control system (dedicated controllers or PLC).

Applications

Commercial and service sector (operating rooms in hospitals, safety systems for buildings, computer rooms for banks and insurance companies, lighting and emergency lighting systems in malls, etc.), **industry and infrastructure.**

Whatever the system, you benefit from our expertise!

> MTSE range

Compact INS
From 40 A to 630 A

> RTSE range

Compact NSX
From 100 A to 630 A

Masterpact NT / NW
From 630 A to 6300 A

> ATSE range

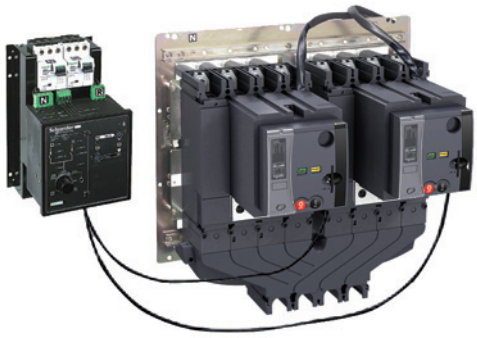

UA Controller **Compact NSX**
From 100 A to 630 A

Our expertise and support come together with the source-changeover system you choose for your LV electrical installation.

With Compact INS, Compact NSX and Masterpact NT and NW, we offer a complete range of solutions, designed around key values:

Maximum continuity of service

> Energy availability is ensured whatever the external requirements (e.g. high power demand).

> Maintenance and replacement of the sources (N or R) can be done with no interruption of service.

You can maintain a continuous level of service and customer satisfaction.

Maximum safety

For LV electrical installations where safety and continuity of service are critical for people and/or equipment such as hospitals, airports, banks, malls, etc.

Optimized energy management

> Transfer the load to a replacement source according to external requirements.

> Manage power sources according to power quality and power costs.

> Perform system regulation.

> Switch to an emergency replacement source.

You are no longer dependent on your power supply (and supplier)!

Simplicity and reliability

> **Simple installation** on LV switchboard.

> **Optimized size** of the switchboard.

> System **based on pre-tested components.**

> Compliance with **IEC 60947-6-1.**

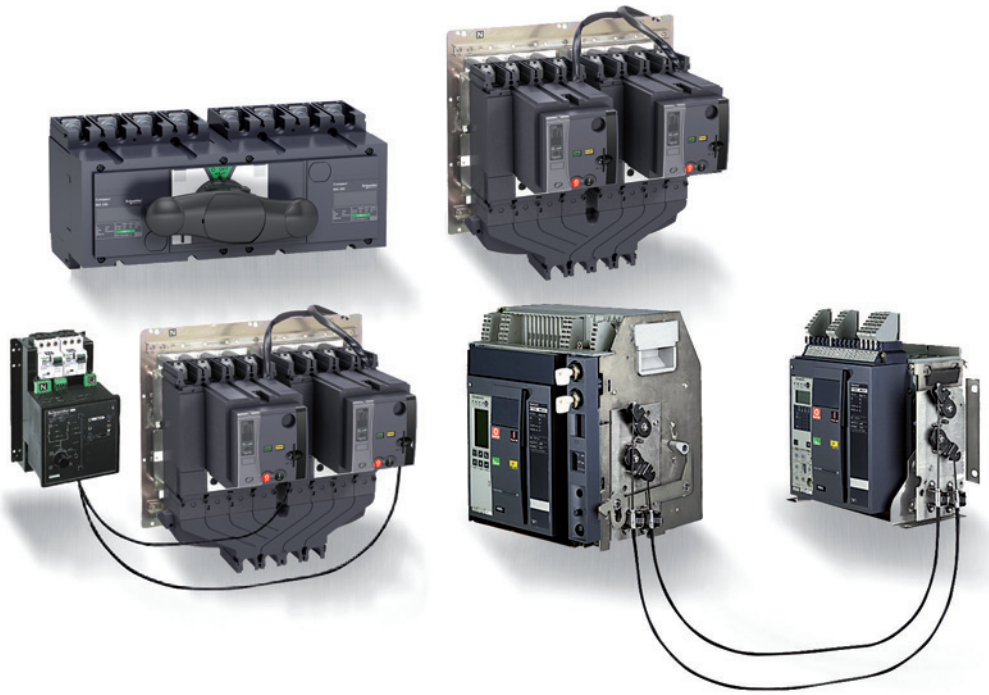

TOOLS

Ecodial

Ecodial software is dedicated to LV electrical installation calculation in accordance with the IEC60364 international standard or national standards.

This 4th generation, "Ecodial Advance Calculation 4", offers a new ergonomic and new features:

- operating mode that allows easy calculation in case of installation with different type of sources (parallel transformers, back-up generators...)
- discrimination analysis associating curves checking and discrimination tables
- direct access to protection settings including residual current protections
- easy selection of alternate solutions or manual selection of a product.

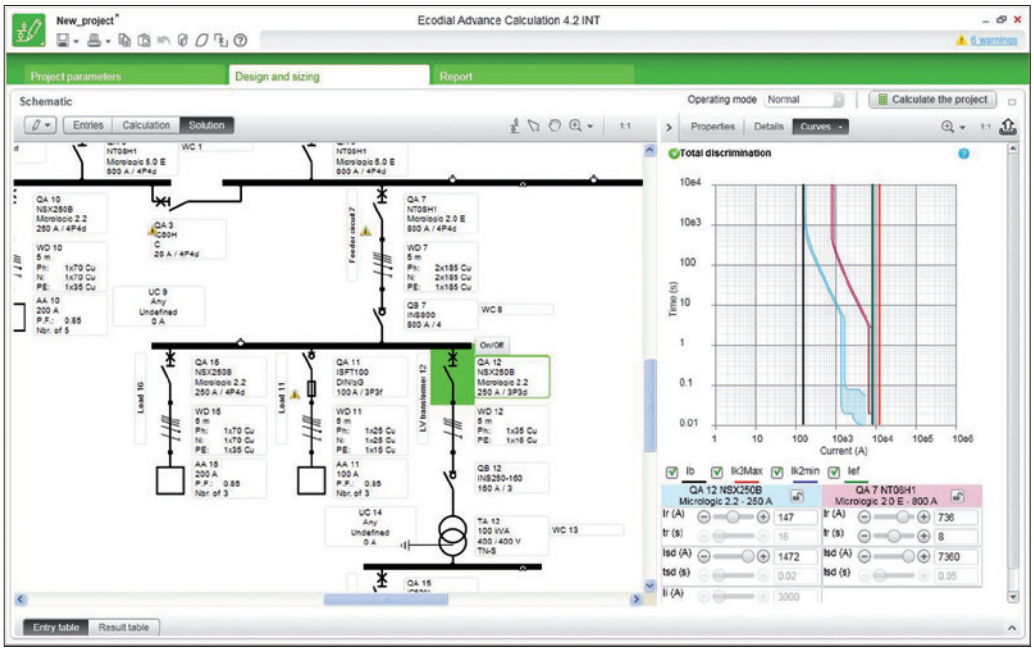

TOOLS

schneider-electric.com

This international site allows you to access all the Schneider Electric Solution and Product information via :

- comprehensive descriptions
- range data sheets
- a download area
- product selectors
- ...

You can also access the information dedicated to your business and get in touch with your Schneider Electric country support.

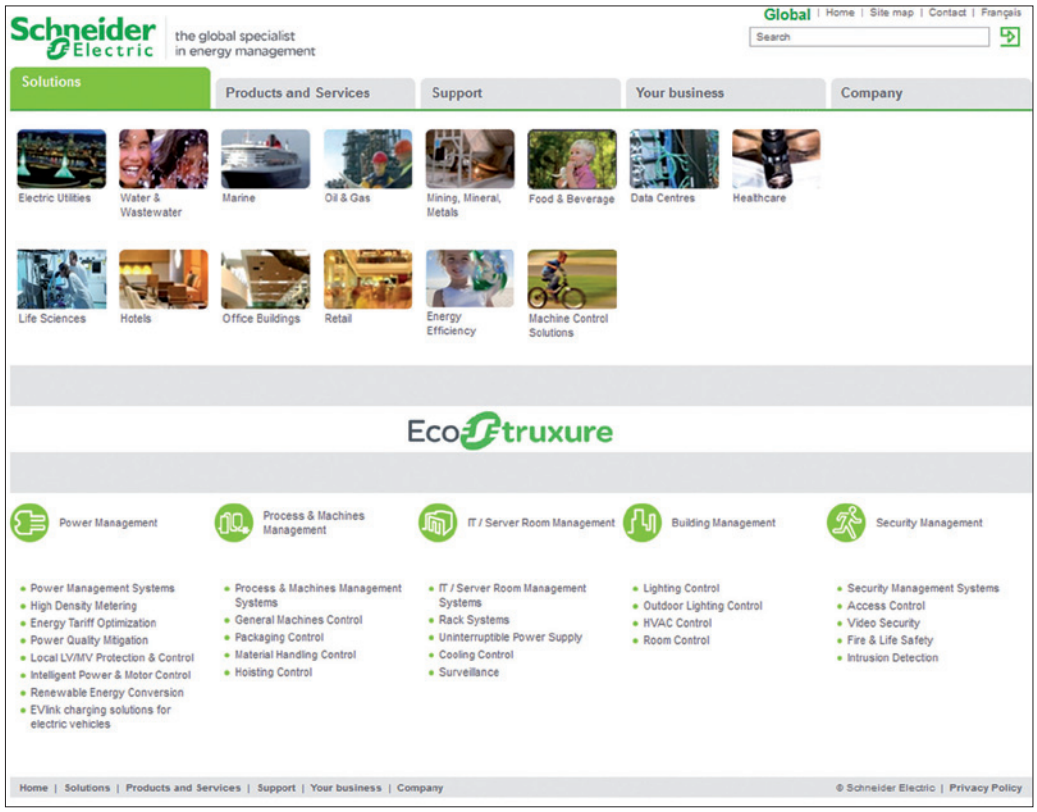

General content

Presentation 2

Functions and characteristics A-1

Dimensions and connection B-1

Electrical diagrams C-1

Catalogue numbers and order form D-1

For maximum continuity of service...

Incoming feeders and main LV switchboards

PB105109.eps

Currents
From 630 to 6300 A.

Db101543.eps

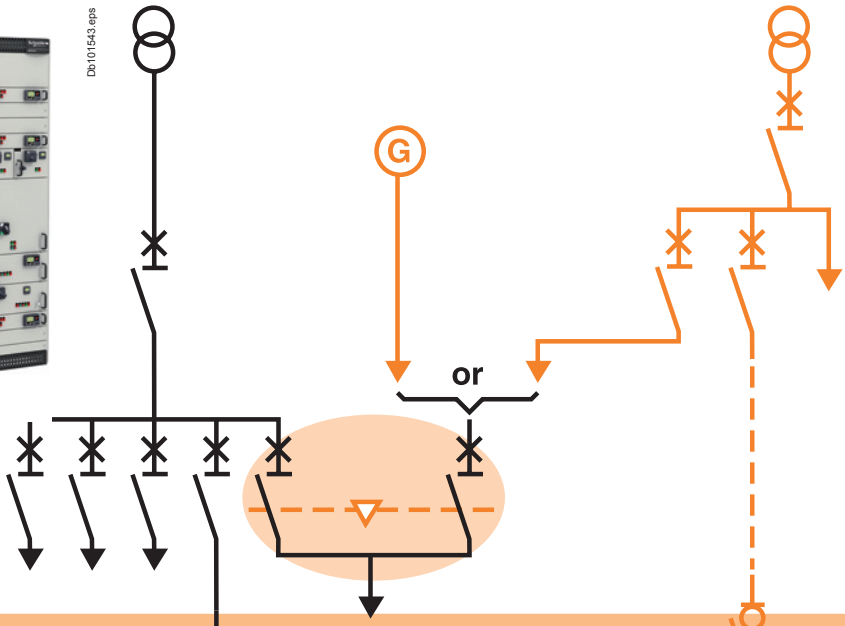

Power distribution

PD390385_SE_R_35.eps

Currents
From 250 to 3200 A.

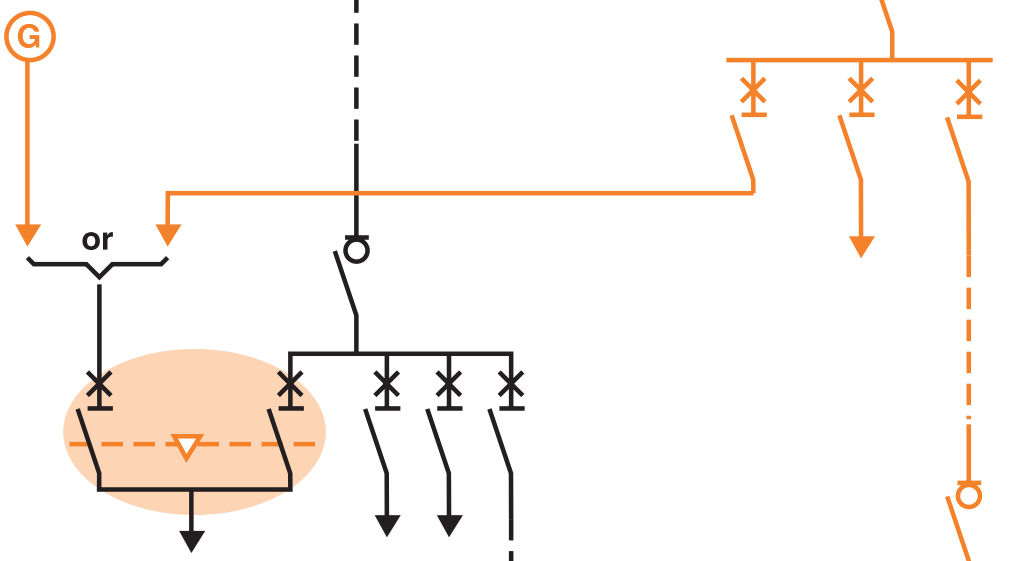

Loads

PB111556.eps

Currents
From 40 to 400 A.

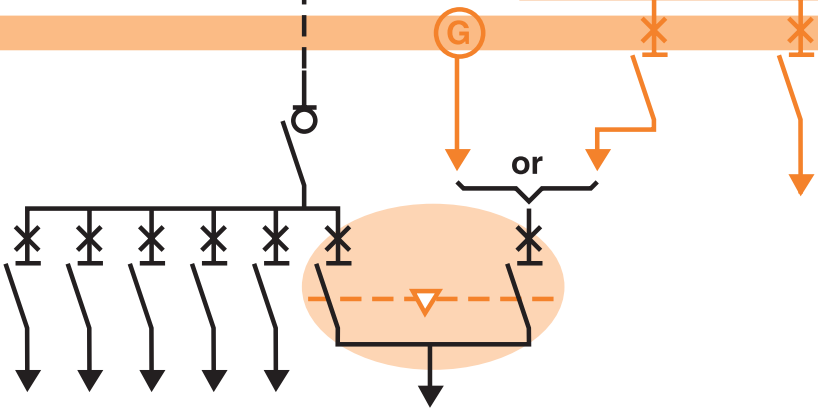

... in a wide range of applications

1 normal source
1 replacement source

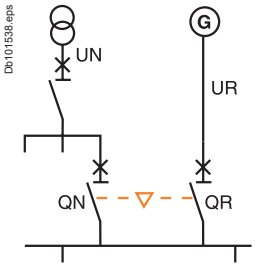

QN	QR
0	0
1	0
0	1

2 sources with coupler on busbars

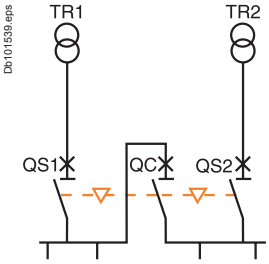

QS1	QC	QS2
0	0	0
1	0	1
1	1	0
0	1	1
1	0	0 (1)
0	0	1 (1)

(1) possible by forcing operation.

2 normal sources
1 replacement source

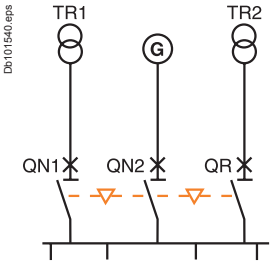

QN1	QN2	QR
0	0	0
1	1	0
0	0	1
1	0	0
0	1	0

Generator or permanent source

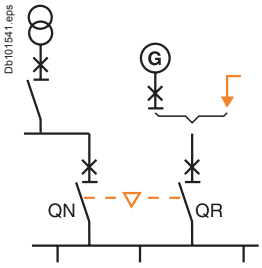

QN	QR
0	0
1	0
0	1

Typical applications:
- continuous production processes
- operating rooms
- computer rooms...

Generator or permanent source

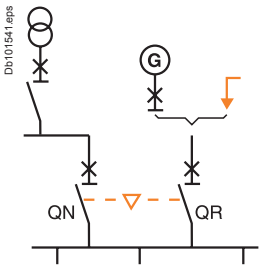

Generator or permanent source

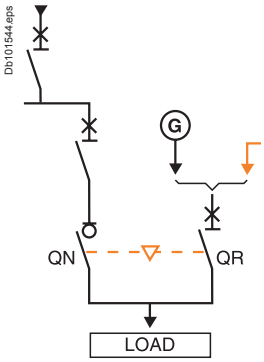

QN	QR
0	0
1	0
0	1

Typical applications:
- large electrical installations (e.g. airports)
- refrigeration units
- special electricity tariffs
- pumping stations...

TOOLS

Ecodial

Ecodial software is dedicated to LV electrical installation calculation in accordance with the IEC60364 international standard or national standards.

This 4th generation, "Ecodial Advance Calculation 4", offers a new ergonomic and new features:

- operating mode that allows easy calculation in case of installation with different type of sources (parallel transformers, back-up generators...)
- discrimination analysis associating curves checking and discrimination tables
- direct access to protection settings including residual current protections
- easy selection of alternate solutions or manual selection of a product.

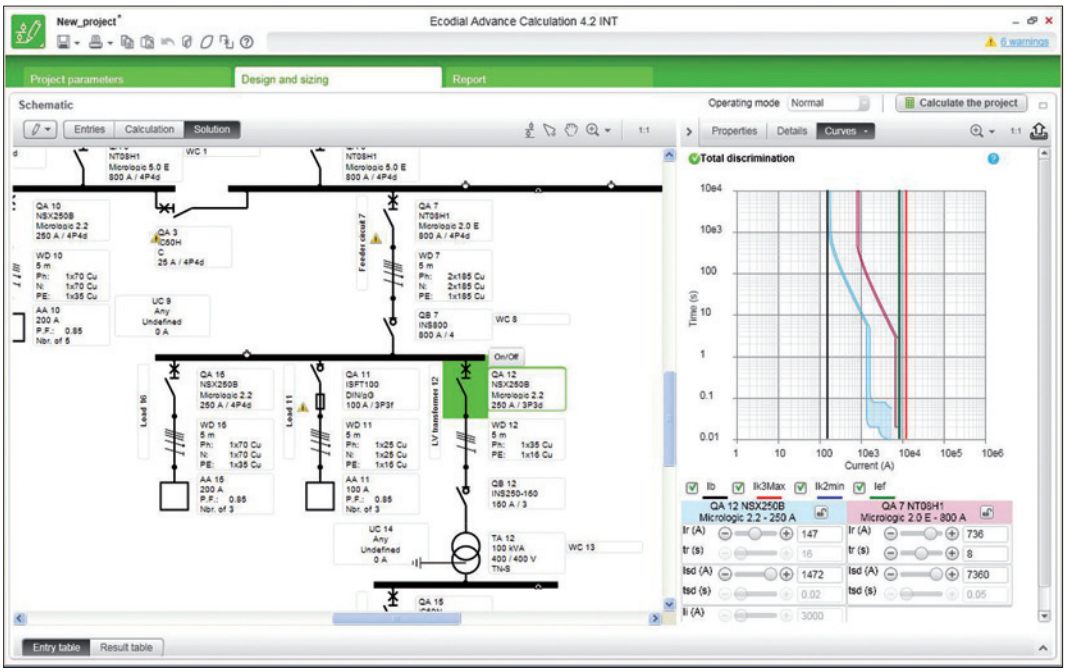

Functions and characteristics

Presentation 2

Manual and Automatic Transfer Switch **A-2**

Switching devices
Class PC A-4
Class CB A-6

Mechanical interlocking **A-10**

Electrical interlocking
IVE unit A-14

Operating sequences
IVE unit A-15

Overview of source-changeover system **A-16**

Associated controllers
Controller selection A-17
Controller installation A-18
BA controller A-19
BA controller, Operating sequences A-20
UA controller A-21
UA controller, Operating sequences, Forced operation mode A-22
UA controller, Operating sequences, Special-tariff mode A-23
UA controller, Operating sequences, Test mode and automatic operation A-24
UA/BA controller A-25

Dimensions B-1
Electrical diagrams C-1
Catalogue numbers and order forms D-1

Manual and Automatic Transfer Switch

Manuel Transfert Switch Equipment

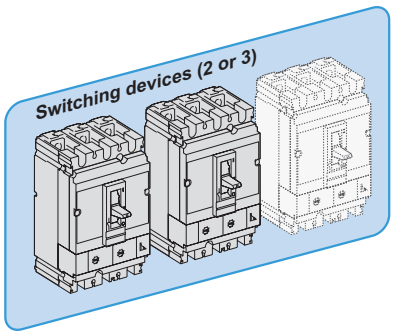

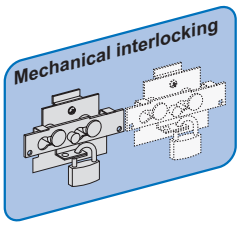

Automatic Transfert Switch Equipment

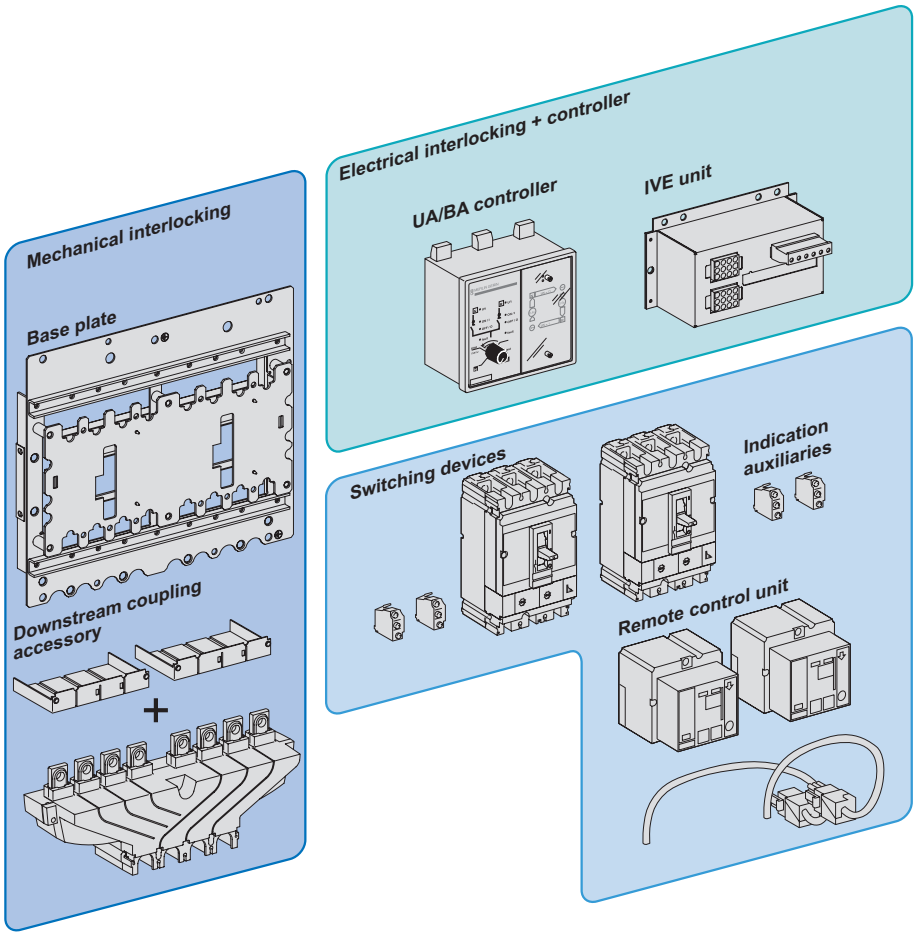

Manual and Automatic Transfer Switch

Switching devices

	Class PC	Class CB
Compact INS/INV	A-4	-
Compact NSX	A-5	A-6
Compact NS	A-5	A-7
Masterpact NT	A-5	A-7
Masterpact NW	A-5	A-7

Mechanical interlocking

Mechanical interlocks	A-10
Keylocks with captive keys	A-12
Cables or connecting rods	A-13

Electrical interlocking and Automatic controller

Electrical interlocking	
IVE unit + base plate	A-14
IVE unit, Operating sequences	A-15
With automatic controller	
Controller selection	A-17
Controller installation	A-18
BA controller	A-19
BA controller, Operating sequences	A-20
UA controller	A-21
UA controller, Operating sequences, Forced operation mode	A-22
UA controller, Operating sequences, Special-tariff mode	A-23
UA controller, Operating sequences, Test mode and automatic operation	A-24
UA/BA controller, Operating sequences	A-25

Informations

IEC60947-6-1 applies to transfer switching equipment (TSE) to be used in power systems for transferring a load supply between a normal and an alternate source (other power supply or generator).

TSE is classified according to

- the method of controlling the transfer
  - manually transfer switching equipment (MTSE)
  - automatic transfer switching equipment (ATSE)
- their short circuit capability
  - Class PC: TSE that is capable of making and withstanding, but not intended for breaking short-circuit currents.
    Switch and switch-disconnectors are the most useful products used.
  - Class CB: TSE that is capable of working, withstanding, it's intended for breaking short-circuit currents and is provided with over-current releases. Circuit breakers (air circuit breaker or moulded-case circuit breaker) are the most useful products used.

Switching devices
Class PC

Range		Compact INS	Compact INS/INV
Types of devices		INS40 to INS80 INS100 to INS160	INS250 to INS630 INV100 to INV630
Mixing possibilities		All devices, not possible with a complete assembly source-changeover	All devices, not possible with a complete assembly source-changeover
Electrical characteristics			
Current rating		40 to 160 A	100 to 630 A
Insulating voltage Ui (V AC)		750	800
Rated operational voltage			
Positive break indication		■	■
Number of poles (N and R devices must have the same number of poles)		3, 4	3, 4
Operating temperature		-25 °C and +70 °C	-25 °C and +70 °C
Additional indication and control auxiliaries			
Indication contacts		OF	OF
Voltage releases	MX shunt		
	MN undervoltage		
Voltage presence indicator		■	■
Voltage transformer			
Ammeter module		■	■
Insulation monitoring module			
Installation and connection			
Fixed front connected		■	■
Fixed rear connected		■	■
Withdrawable, plug-in or drawout			
Installation and connection accessories			
Downstream coupling accessory			■
Bare-cable connectors		■	■
Terminal extensions		■	■
Terminal shields and inter-phase barriers		■	■
Front panel escutcheons			■
Locking	by padlock	■	■
	by keylock	■	■

Range		Compact NSX		Compact NS	Masterpact	
Types of devices		NSX100 to NSX250	NSX400 to NSX630	NS630b to NS1600	NT06 to NT16	NW08 to NW63
Mixing possibilities		all devices NSX100NA to NSX250NA fixed/fixed or plug-in/plug-in	all devices NSX100NA to NSX630NA fixed/fixed or plug-in/plug-in	all devices NS630bNA to NSX1600NA fixed/fixed or plug-in/plug-in	all mixing possibilities (fixed, drawout or fixed + drawout) NA/HA/HF	all mixing possibilities (fixed, drawout or fixed + drawout) NA/HA/HF
Electrical characteristics						
Current rating		15 to 250 A	15 to 630 A	250 to 1600 A	600 to 1600 A	800 to 6300 A
Insulating voltage Ui (V AC)		750	750	750	1000	1000
Rated operational voltage						
Positive break indication		■	■		■	■
Number of poles (N and R devices must have the same number of poles)		3, 4	3, 4	3, 4	3, 4	3, 4
Operating temperature		-25 °C to +70 °C (50 °C for 440 V - 60 Hz)		-25 °C to +70 °C (50 °C for 440 V - 60 Hz)	-25 °C to +70 °C (50 °C for 440 V - 60 Hz)	
Control characteristics						
Control voltage	AC	48 V - 50 Hz 110/130, 220/240, 380/440 V - 50/60 Hz	48 V - 50 Hz 110/130, 220/240, 380/440 V - 50/60 Hz		48 to 415 V - 50/60 Hz 440 V - 60 Hz	
	DC	24-250 V	24-250 V	24-250 V	24-250 V	24-250 V
Maximum consumption	AC	500 VA	500 VA	180 VA	180 VA	180 VA
	DC	500 W	500 W	180 W	180 W	180 W
Minimum switching time		800 ms	800 ms	800 ms	800 ms	800 ms
Protection and measurement						
Earth-leakage protection	by Vigi module	■	■			
	by control unit			■	■	■
	by add-on Vigirex relay	■	■	■	■	■
Current measurements				■	■	■
Voltage, frequency, power measurements, etc.					■	■
Additional indication and control auxiliaries						
Indication contacts		OF + SD (+ SDV)	3 OF + SD (+ SDV)	2 OF + SD	2 OF + SD	2 OF + SD
Voltage releases	MX shunt	■	■	■	■	■
	MN undervoltage	■	■	■	■	■
Voltage presence indicator		■	■		■	■
Voltage transformer		■	■		■	■
Ammeter module		■	■		■	■
Insulation monitoring module		■	■		■	■
Installation and connection						
Fixed front connected					■	■
Fixed rear connected		■ (long rear connections)	■ (long rear connections)	■ (vertical or horizontal)	■ (vertical or horizontal)	■ (vertical or horizontal)
Withdrawable, plug-in or drawout		■ (plug-in on base)	■ (plug-in on base)	■ (drawout)	■ (drawout)	■ (drawout)
Installation and connection accessories						
Downstream coupling accessory		■	■			
Bare-cable connectors		■	■	■		
Terminal extensions		■	■			
Terminal shields and inter-phase barriers			■	■		
Front panel escutcheons		■	■	■	■	■
Locking	by padlock	■	■	■	■	■
	by keylock	■	■	■	■	■

Switching devices
Class CB

Range		Compact NSX	
Types of devices		NSX100 to NSX250	NSX400 to NSX630
Mixing possibilities		all devices NSX100 to NSX250 N/H/L fixed/fixed or plug-in/plug-in	all devices NSX100 to NSX630 N/H/L fixed/fixed or plug-in/plug-in
Electrical characteristics			
Current rating		15 to 250 A	15 to 630 A
Insulating voltage Ui (V AC)		750	750
Rated operational voltage			
Positive break indication		■	■
Number of poles (N and R devices must have the same number of poles)		3, 4	3, 4
Operating temperature		-25 °C to +70 °C (50 °C for 440 V - 60 Hz)	
Motor mechanism			
Control voltage	AC	48 V - 50 Hz 110/130, 220/240, 380/440 V - 50/60 Hz	48 V - 50 Hz 110/130, 220/240, 380/440 V - 50/60 Hz
	DC	24-250 V	24-250 V
Maximum consumption	AC	500 VA	500 VA
	DC	500 W	500 W
Minimum switching time		800 ms	800 ms
Protection and measurement			
Earth-leakage protection	by Vigi module	■	■
	by control unit		
	by add-on Vigirex relay	■	■
Current measurements Voltage, frequency, power measurements, etc.			
Additional indication and control auxiliaries			
Indication contacts		OF + SD (+ SDV)	3 OF + SD (+ SDV)
Voltage releases	MX shunt	■	■
	MN undervoltage	■	■
Voltage presence indicator		■	■
Voltage transformer		■	■
Ammeter module		■	■
Insulation monitoring module		■	■
Installation and connection			
Fixed front connected			
Fixed rear connected		■ (long rear connections)	■ (long rear connections)
Withdrawable, plug-in or drawout		■ (plug-in on base)	■ (plug-in on base)
Installation and connection accessories			
Downstream coupling accessory		■	■
Bare-cable connectors		■	■
Terminal extensions		■	■
Terminal shields and inter-phase barriers			■
Front panel escutcheons		■	■
Locking	by padlock	■	■
	by keylock	■	■

Compact NSX	NSX100-250	NSX400 to NSX630
Rated current In (A)	100 to 250	400 to 630
Mechanical durability (O_N-C_R-O_R-C_N cycles) (1)	20000 - 40000 - 50000	15000
Electrical durability at In (O_N-C_R-O_R-C_N cycles) (1) for ≤ 440 V and 480 V NEMA (2)	10000 - 20000 - 30000	4000 - 6000
Electrical durability at In (O_N-C_R-O_R-C_N cycles) (1) for U = 500 V to 690 V (2)	5000 - 7500 - 10000	2000 - 3000

(1) Mechanical and electrical durability not applicable to Masterpact H3 and L versions.
(2) Electrical durability tests carried out with a power factor of 0.8 as per IEC 947-2.

Note:
O_N: opening of N source
C_R: closing of R source
O_R: opening of R source
C_N: closing of N source

	Compact NS	Masterpact NT	Masterpact NW
	NS630b to NS1600	NT06 to NT16	NW08 to NW63
	all devices NS630b to 1600 N/H/L fixed/fixed or plug-in/plug-in	all mixing possibilities (fixed, drawout or fixed + drawout) N1/H1/H2/H3/L1	all mixing possibilities (fixed, drawout or fixed + drawout) N1/H1/H2/H3/L1
	250 to 1600 A	600 to 1600 A	800 to 6300 A
	750	1000	1000
		■	■
	3, 4	3, 4	3, 4
		-25 °C to +70 °C (50 °C for 440 V - 60 Hz)	
		48 to 415 V - 50/60 Hz 440 V - 60 Hz	
	24-250 V	24-250 V	24-250 V
	180 VA	180 VA	180 VA
	180 W	180 W	180 W
	800 ms	800 ms	800 ms
	■	■	■
	■	■	■
	■	■ ■	■ ■
	2 OF + SD	2 OF + SD	2 OF + SD
	■	■	■
	■	■	■
		■	■
		■	■
		■	■
		■	■
		■	■
	■ (vertical or horizontal)	■ (vertical or horizontal)	■ (vertical or horizontal)
	■ (drawout)	■ (drawout)	■ (drawout)
	■		
	■		
	■	■	■
	■	■	■
	■	■	■

	Compact NS	Masterpact NT/NW					
	NS630b to NS1600	**NT06-NT10**	**NT12-NT16**	**NW08-NW16**	**NW20**	**NW25-NW40**	**NW50-NW63**
	630 to 1600	630 to 1600	1250 to 1600	800 to 1600	2000	2500 to 4000	5000 to 6300
	8000	8000	8000	10000	10000	10000	5000
	2000	6000	6000	10000	8000	5000	1500
	1500	3000	2000	10000	6000	2500	1500

Switching devices

PB111489_43.eps

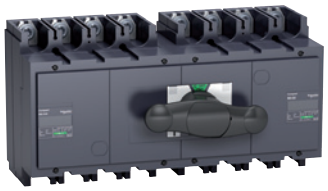

Compact INS			INS250-100		INS250-160		INS250-200		INS250	
Number of poles			3, 4		3, 4		3, 4		3, 4	
Conventional thermal current (A)	**Ith**	at 60 °C	100		160		200		250	
Rated operational current (A)	**Ie**	**Electrical AC, 50/60 Hz**	**AC22A**	**AC23A**	**AC22A**	**AC23A**	**AC22A**	**AC23A**	**AC22A**	**AC23A**
		440-480 V	100	100	160	160	200	200	250	250
		660-690 V	100	100	160	160	200	200	250	250
Durability (category A) (O_N-C_R-O_R-C_N cycles)		Mechanical	15000		15000		15000		15000	
		Electrical AC, 50/60 Hz	**AC22A**	**AC23A**	**AC22A**	**AC23A**	**AC22A**	**AC23A**	**AC22A**	**AC23A**
		440-480 V	1500	1500	1500	1500	1500	1500	1500	1500
		660-690 V	1500	1500	1500	1500	1500	1500	1500	1500

Compact INS			INS320		INS400		INS500		INS630	
Number of poles			3, 4		3, 4		3, 4		3, 4	
Conventional thermal current (A)	**Ith**	at 60 °C	320		400		500		630	
Rated operational current (A)	**Ie**	**Electrical AC, 50/60 Hz**	**AC22A**	**AC23A**	**AC22A**	**AC23A**	**AC22A**	**AC23A**	**AC22A**	**AC23A**
		440-480 V	320	320	400	400	500	500	630	630
		660-690 V	320	320	400	400	500	500	630	630
Durability (category A) (O_N-C_R-O_R-C_N cycles)		Mechanical	10000		10000		10000		10000	
		Electrical AC, 50/60 Hz	**AC22A**	**AC23A**	**AC22A**	**AC23A**	**AC22A**	**AC23A**	**AC22A**	**AC23A**
		440-480 V	1500	1500	1500	1500	1500	1500	1500	1500
		660-690 V	1500	1500	1500	1500	1500	1500	1500	1500

Note:
O_N: opening of N source
C_R: closing of R source
O_R: opening of R source
C_N: closing of N source

PB105106_61.eps

PB100842_68_SE.eps

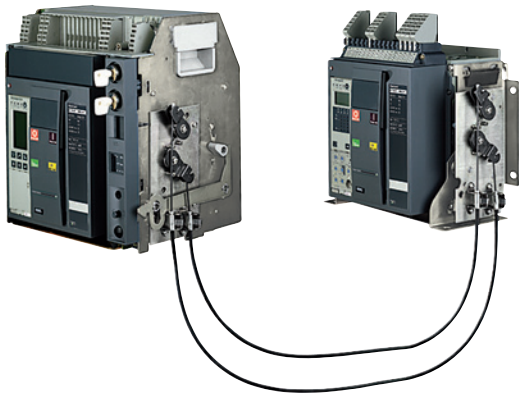

Compact NSX and Compact NS class PC and CB	NSX100 to 250	NSX400 to NSX630	NS630b to NS1600
Number of poles	3, 4	3, 4	3, 4
Rated current In (A)	100 to 250	400 to 630	630 to 1600
Mechanical durability (O_N-C_R-O_R-C_N cycles)	20000 - 40000 - 50000	15000	8000
Electrical durability at In (O_N-C_R-O_R-C_N cycles) for ≤ 440 V and 480 V NEMA (2)	10000 - 20000 - 30000	4000 - 6000	2000
Electrical durability at In (O_N-C_R-O_R-C_N cycles) for U = 500 V to 690 V (2)	5000 - 7500 - 10000	2000 - 3000	1500

Masterpact class PC and CB	NT06-NT10	NT12-NT16	NW08-NW16	NW20	NW25-NW40	NW50-NW63
Number of poles	3, 4	3, 4	3, 4	3, 4	3, 4	3, 4
Rated current In (A)	630 to 1600	1250 to 1600	800 to 1600	2000	2500 to 4000	5000 to 6300
Mechanical durability (1) (O_N-C_R-O_R-C_N cycles)	8000	8000	10000	10000	10000	5000
Electrical durability at In (O_N-C_R-O_R-C_N cycles) (1) for ≤ 440 V and 480 V NEMA (2)	6000	6000 NT16: 3000	10000	8000	5000	1500
Electrical durability at In (O_N-C_R-O_R-C_N cycles) (1) for U = 500 V to 690 V (2)	3000	2000 NT16: 1000	10000	6000	2500	1500

(1) Mechanical and electrical durability not applicable to Masterpact H3 and L versions.
(2) Electrical durability tests carried out with a power factor of 0.8 as per IEC 947-2.

Note:
O_N: opening of N source
C_R: closing of R source
O_R: opening of R source
C_N: closing of N source

Mechanical interlocking

Range	Compact		Compact
Models	INS40 to INS80 INS100 to INS160	INS250 to INS630 INV250 to INV630	NSX100 to NSX250 NSX400 to NSX630
Current rating (A)	40 to 160	100 to 630	100 to 630
Type of device	PC type	PC type	PC and CB type
Interlocking by toggles			
TSE M			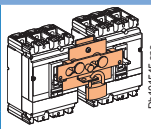 Db101546.eps 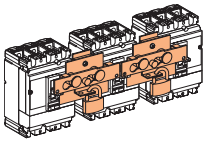 Db101545b.eps
Interlocking by rotary handles			
TSE M	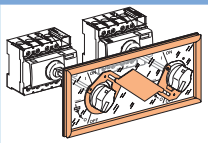 Db101546.eps	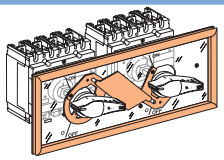 Db101547.eps	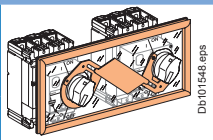 Db101548.eps
Interlocking by keylocks with captive keys			
TSE M		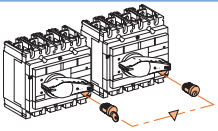 DB418047.eps	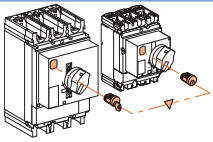 Db101550.eps
Interlocking by a base plate			
TRE A			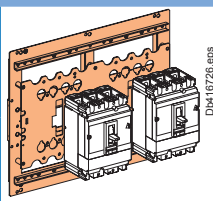 Db416726.eps
Source-changeover			
TSE M		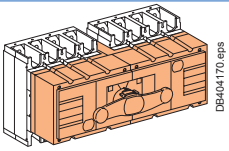 DB404170.eps	

Mechanical interlocking

Range	Compact	Masterpact	
Models	NS630b to NS1600	NT06 to NT16	NW08 to NW63
Current rating (A)	630b to 1600	630 to 1600	800 to 6300
Type of device	PC and CB type	PC and CB type	PC and CB type
Interlocking by extended rotary handles			
M	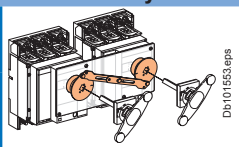 Db101553.eps		
Interlocking via device keylocks by captive keys			
M	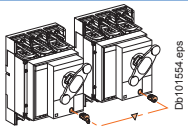 Db101554.eps	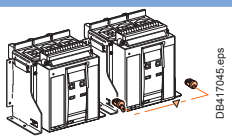 DB417045.eps	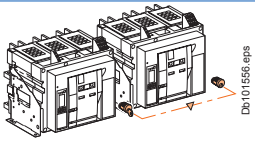 Db101556.eps
Mechanical interlocking using connecting rods			
MA	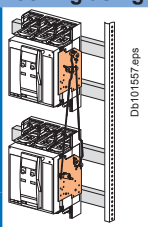 Db101557.eps (1)	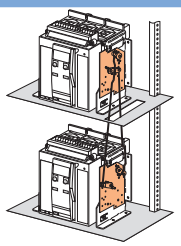 Db101558.eps	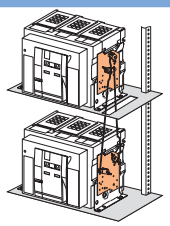 Db101559.eps
Mechanical interlocking by cables			
MA	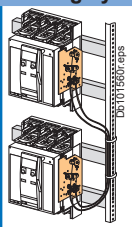 Db101560r.eps (1) (2)	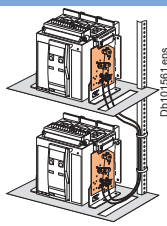 Db101561.eps	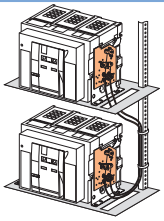 Db101562.eps 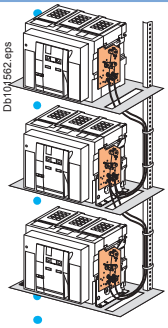 Db101562r.eps (3)
Mechanical interlocking by cables			
MA	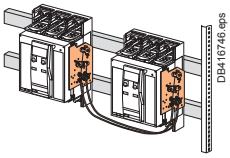 DB416746.eps	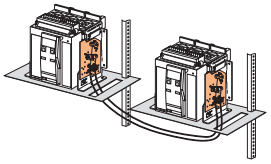 DB416840.eps	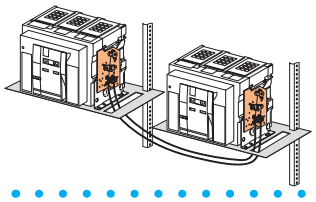 DB416748.eps 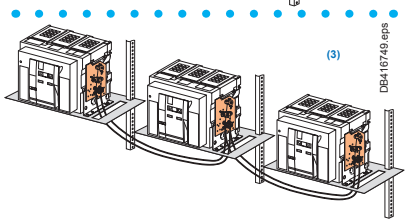 (3) DB416749.eps

(1) Implemented with NS630b to NS1600 electrically-operated devices only.
(2) For source-changeover systems using cables, always respect the installation conditions specified on.
(3) Not compatible with automatic controller for NW40b to NW63.

***Note:** for other cases, please consult us.*

Mechanical interlocking

PB113435.eps

Interlocking of two or three toggle-controlled devices.

Interlocking of two or three toggle-controlled devices

Interlocking system

Two devices can be interlocked using this system. Two identical interlocking systems can be used to interlock three devices installed side by side.

Authorised positions:

- one device closed (ON), the others open (OFF)
- all devices open (OFF).

The system is locked using one or two padlocks (shackle diameter 5 to 8 mm).

This system can be expanded to more than three devices.

There are two interlocking-system models:

- one for Compact INS/INV
- one for Compact NSX100 to NSX250
- one for Compact NSX400 to NSX630.

Combinations of Normal and Replacement devices

All toggle-controlled fixed or plug-in Compact NSX100 to NSX630 circuit breakers and switch-disconnectors of the same frame size can be interlocked. The devices must be either all fixed or all plug-in versions.

PB113418.eps

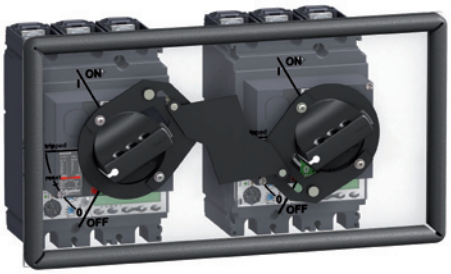

Interlocking of two devices by rotary handles.

Interlocking of two devices by rotary handles

Interlocking system

Interlocking involves padlocking the rotary handles on two devices which may be either circuit breakers or switch-disconnectors.

Authorised positions:

- one device closed (ON), the other open (OFF)
- both devices open (OFF).

The system is locked using up to three padlocks (shackle diameter 5 to 8 mm).

There are two interlocking-system models:

- one for Compact INS/INV
- one for Compact NSX100 to NSX250
- one for Compact NSX400 to NSX630.

Combinations of Normal and Replacement devices

All rotary-handle fixed or plug-in Compact NSX100 to NSX630 circuit breakers and switch-disconnectors of the same frame size can be interlocked. The devices must be either all fixed or all plug-in versions.

PB113829.eps

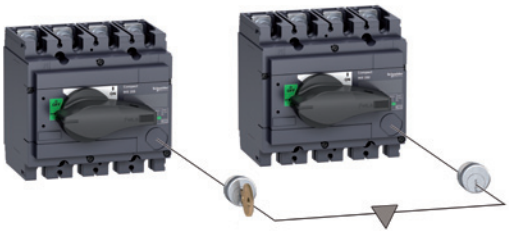

Interlocking with keylocks.

Interlocking of devices by keylocks (captive keys)

Interlocking using keylocks is very simple and makes it possible to interlock two or more devices that are physically distant or that have very different characteristics, for example medium-voltage and low-voltage devices or a Compact NSX100 to NSX630 switch-disconnector.

Interlocking system

Each device is equipped with an identical keylock and the key is captive on the closed (ON) device. A single key is available for all devices. It is necessary to first open (OFF position) the device with the key before the key can be withdrawwn and used to close another device.

A system of wall-mounted captive key boxes makes a large number of combinations possible between many devices.

Combinations of Normal and Replacement devices

All rotary-handle Compact NSX100 to NSX630 circuit breakers and switch-disconnectors can be interlocked between each other or with any other device equipped with the same type of keylock.

PB111489_43.eps

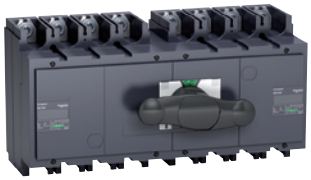

Source-changeover.

Source-changeover

These assemblies provide an easy way to implement source changeover functions with:

- a single 3-position rotary handle that controls the two switch-disconnectors (Normal source ON, OFF, Replacement source ON)
- a smaller size, taking up less room in the switchboard.

A complete source changeover assembly can be ordered with a single catalogue number.

Mechanical interlocking

PB113431.eps

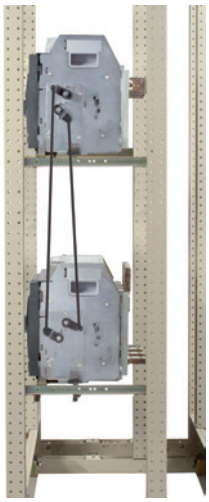

Interlocking of two Masterpact NT or NW circuit breakers using connecting rods.

Interlocking of two devices using connecting rods

The two devices must be mounted one above the other (either 2 fixed or 2 withdrawable/drawout devices).
Combinations are possible between Compact NS630b to NS1600 devices, between Masterpact NT and between Masterpact NW devices.
With connecting rods, it is also possible to associate two different types of breakers or switch-disconnectors:

- compact NS with masterpact NT
- compact NS with masterpact NW
- Masterpact NT with Masterpact NW.

Installation

This function requires:

- an adaptation fixture on the right side of each switch-disconnector
- a set of connecting rods with no-slip adjustments
- the use of a mechanical operation counter is mandatory.

The adaptation fixtures, connecting rods, circuit breakers and switch-disconnectors are supplied separately, ready for assembly by the customer.
The maximum vertical distance between the fixing planes is 900 mm.

PB100842_68_SE.eps

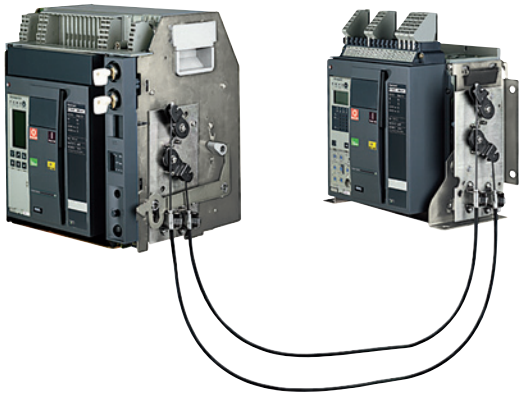

Interlocking of two Masterpact circuit breakers using cable.

Interlocking of two or three devices using cables

For cable interlocking, the circuit breakers may be mounted one above the other or side-by-side.
The interlocked devices may be fixed or drawout, three-pole or four-pole, and may have different ratings and sizes.
The following associations are possible:

- 2 compact NS630b to NS1600
- 2 Masterpact NT
- 2 Masterpact NW
- 3 Masterpact NW
- combinations Compact NS with Masterpact NT or Masterpact NW
- combinations Masterpact NT with NW.

Interlocking between two Masterpact NT or NW

This function requires:

- an adaptation fixture on the right side of each device
- a set of cables without slip adjustments
- the use of a mechanical operation counter CDM is mandatory.

The maximum distance between the fixing planes (vertical or horizontal) is 2000 mm.

Interlocking between three Masterpact NW

This function requires:

- a specific adaptation fixture installed on the right side of each device
- two sets of cables without slip adjustments
- the use of a mechanical operation counter CDM is mandatory.

The maximum distance between the fixing planes (vertical or horizontal) is 1000 mm.

Installation

The adaptation fixtures, sets of cables and circuit breakers or switch-disconnectors are supplied separately, ready for assembly by the customer.

Installation conditions for cable interlocking systems:

- cable length: 2.5 m
- radius of curvature: 100 mm
- maximum number of curves: 3.

Only Masterpact NW may be used for three-device combinations.

Interlocking between two devices (Compact NS630b to 1600 or Masterpact NT, NW

This function requires:

- an adaptation fixture on the right side of each device
- a set of cables with no-slip adjustments.

The maximum distance between the fixing planes (vertical or horizontal) is 2000 mm.

PB113432.eps

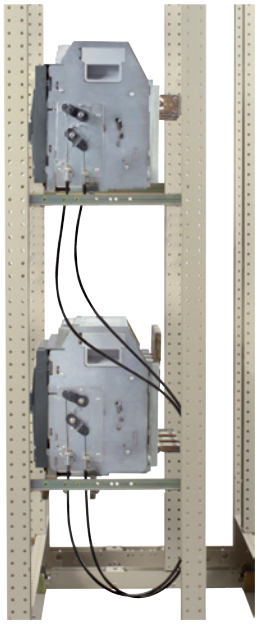

Interlocking of two Masterpact circuit breakers using cables.

Electrical interlocking
IVE unit

Electrical interlocking is used with a mechanical interlocking system.

Morover, the relays controlling the closing order to the "N" and "R" circuit breakers must be mechanically and/or electrically interlocked to prevent them from giving simultaneous closing commands.

IVE unit.

Electrical interlocking is carried out by an electrical control device.
For Compact NSX up to 630 A, electrical interlocking is implemented by the IVE unit integrating control circuits and an external terminal block in accordance with the page C-4 of the chapter "Electric diagrams" of this catalogue.
The integrated control circuits implement the time delays required for correct source transfer.
For Compact NS630b to NS1600 and Masterpact, this function can be implemented in one of two ways:
■ using the IVE unit
■ by an electrician based on the diagrams in accordance with the pages C-8 to C-13 of the chapter "Electric diagrams" of this catalogue.

Characteristics of the IVE unit

■ External connection terminal block:
□ inputs: circuit breaker control signals
□ outputs: status of the SDE contacts on the "N" and "R" source circuit breakers.
■ 2 connectors for the two "N" and "R" source circuit breakers:
□ inputs:
- status of the OF contacts on each circuit breaker (ON or OFF)
- status of the SDE contacts on the "N" and "R" source circuit breakers
□ outputs: power supply for operating mechanisms.
■ Control voltage:
□ 24 to 250 V DC
□ 48 to 415 V 50/60 Hz - 440 V 60 Hz.
The IVE unit control voltage must be same as that of the circuit breaker operating mechanisms.

Necessary equipment

For Compact NSX100 to NSX630, each circuit breaker must be equipped with:
■ a motor mechanism
■ an OF contact
■ an SDE contact.
The components are supplied ready for assembly and the circuit breakers prewired. The prewiring must not be modified.

For Compact NS630b to NS1600, each circuit breaker must be equipped with:
■ a motor mechanism
■ an available OF contact
■ a CE connected-position contact (carriage switch) on withdrawable circuit breakers
■ an SDE contact.

For Masterpact NT and NW, each circuit breaker must be equipped with:
■ a remote-operation system made up of:
□ MCH gear motor
□ MX or MN opening release
□ XF closing release
□ PF "ready to close" contact
■ an available OF contact
■ one to three CE connected-position contacts (carriage switches) on drawout circuit breakers (depending on the installation).

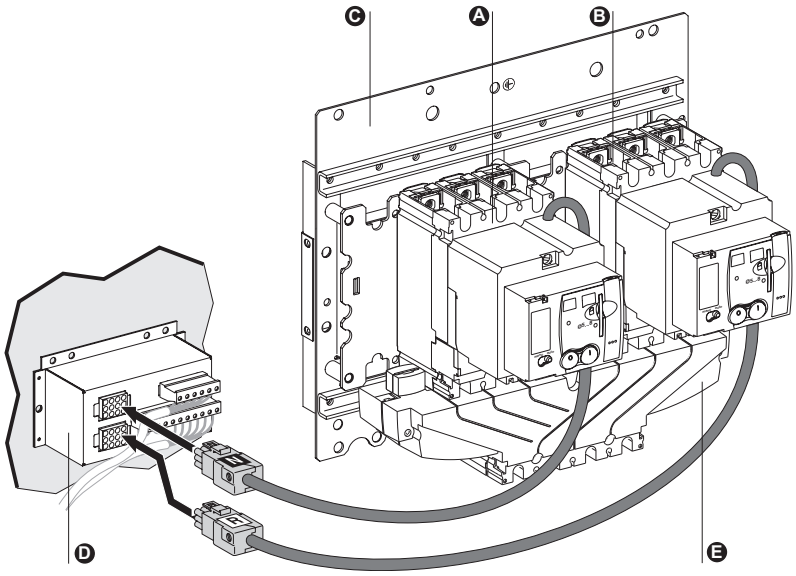

A *Circuit breaker QS1 equipped with a motor mechanism and auxiliary contacts, connected to the N source*
B *Circuit breaker QS2 equipped with a motor mechanism and auxiliary contacts, connected to the R source*
C *Base plate with mechanical interlocking*
D *Electrical interlocking unit IVE*
E *Coupling accessory (downstream connection)*

IVE unit

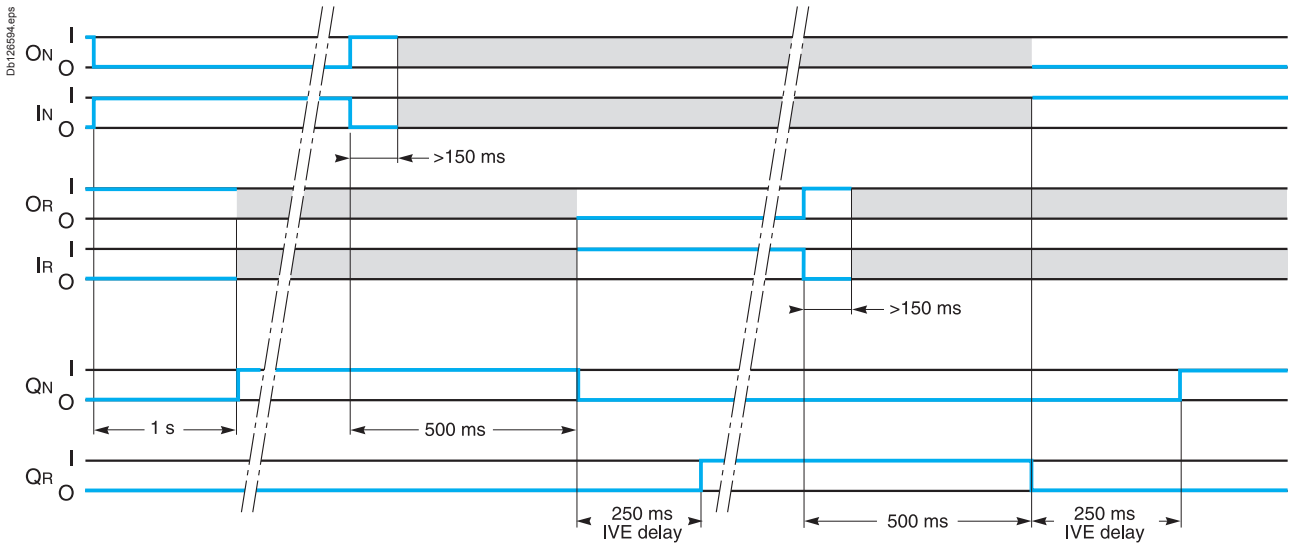

Symbols

QN : "Normal" Compact circuit breaker equipped for remote operation (motor mechanism)
QR : "Replacement" Compact circuit breaker equipped for remote operation (motor mechanism)
ON : Circuit breaker QN opening order
OR : Circuit breaker QR opening order
IN : Circuit breaker QN closing order
IR : Circuit breaker QR closing order
L1 : Faulty "Normal" indication LED
L2 : Faulty "Replacement" indication LED

Dimensions

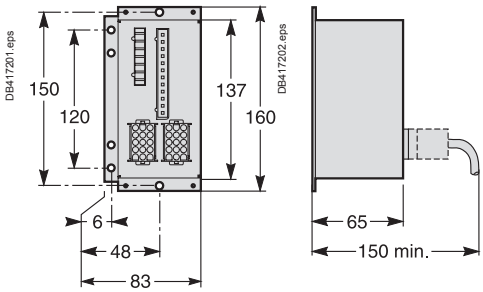

Key
O: OFF (circuit open)
I: ON (circuit closed)
: either ON or OFF.

Note: *following all trips (overload, short-circuit, earth-leakage fault, voluntary trip), a manual reset on the front of the motor mechanism is required.*

Overview of source-changeover system

PB113417.eps

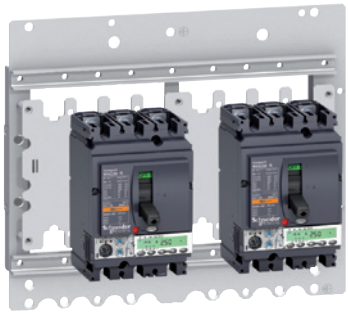

Interlocking on a base plate.

DB417333.eps

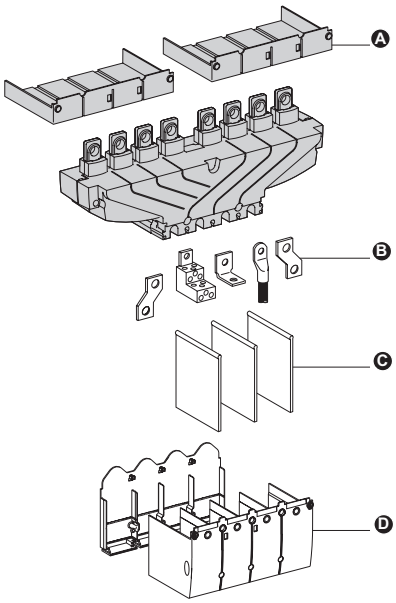

A *Short terminal shields*
B *Terminals*
C *Interphase barriers*
D *Long terminal shields*

Interlocking of two devices by base plate

Interlocking system
A base plate designed for two Compact NSX devices can be installed horizontally or vertically on a mounting rail. Interlocking is carried out on the base plate by a mechanism located behind the devices. In this way, access to the device controls and trip units is not blocked.

Combinations of Normal and Replacement devices
All rotary-handle and toggle-controlled Compact NSX100 to NSX630 circuit breakers and switch-disconnectors can be interlocked. Devices must be either all fixed or all plug-in versions, with or without earth-leakage protection or measurement modules.
An adaptation kit is required to interlock:
- two plug-in devices
- a Compact NSX100 to NSX250 with an NSX400 to NSX630.

Connection to the downstream installation can be made easier using a coupling accessory.

Downstream coupling accessory
This accessory simplifies connection to bars and cables with lugs.
It may be used to couple two switch-disconnectors of the same size.
Pitch between outgoing terminals:
- Compact INS250 and INV100 to 250: 35 mm
- Compact INS/INV320 to INS/INV630: 45 mm
- Compact NSX100 to NSX250: 35 mm
- Compact NSX400 to NSX630: 45 mm.

For Compact NSX circuit breakers, the downstream coupling accessory can be used only with **fixed versions**.

Connection and insulation accessories

The coupling accessory can be fitted with the same connection and insulation accessories as the circuit breakers and switch-disconnectors.

Possible uses	Downstream coupling	
	Possible mounting	Outgoing pitch (mm)
Manual source-changeover systems		
INS250 (100 to 250 A) with rotary handle	■	35
NSX100 to NSX250 with rotary handle	■	35
NSX100 to NSX250 on base plate with toggle control	■	35
INS400 to INS630 (320 to 630 A) with rotary handle	■	45
NSX400 to NSX630 with rotary handle	■	45
NSX400 to NSX630 on base plate with toggle control	■	45
Complete source-changeover assembly		
INS250 (100 to 250 A)	■	35
INS400 to INS630 (320 to 630 A)	■	45

By combining a remote-operated source-changeover system with an integrated BA or UA automatic controller, it is possible to automatically control source transfer according to user-selected sequences.
These controllers can be used on source-changeover systems comprising 2 circuit breakers.
For source-changeover systems comprising 3 circuit breakers, the automatic control diagram must be prepared by the installer as a complement to to diagrams provided in the "electrical diagrams" section of this catalogue.

DB403809.eps

BA controller.

DB403810.eps

UA controller.

Controller		BA	UA
Compatible circuit breakers		All Compact NS, Compact NSX and Masterpact circuit breakers	
4-position switch			
Automatic operation		■	■
Forced operation on "Normal" source		■	■
Forced operation on "Replacement" source		■	■
Stop (both "Normal" and "Replacement" sources off)		■	■
Automatic operation			
Monitoring of the "Normal" source and automatic transfer		■	■
Generator set startup control			■
Delayed shutdown (adjustable) of generator set			■
Load shedding and reconnection of non-priority circuits			■
Transfer to the "Replacement" source if one of the phases of the "Normal" phase is absent			■
Test			
By opening the P25M circuit breaker supplying the controller		■	
By pressing the test button on the front of the controller			■
Indications			
Circuit breaker status indication on the front of the controller: on, off, fault trip		■	■
Automatic mode indicating contact		■	■
Other functions			
Selection of type of "Normal" source (single-phase or three-phase) (1)			■
Voluntary transfer to "Replacement" source (e.g. energy management commands)		■	■
During peak-tariff periods (energy management commands) forced operation on "Normal" sourceif "Replacement" source not operational			■
Additional contact (not part of controller). Transfer to "Replacement" source only if contact is closed (e.g. used to test the frequency of UR).		■	■
Setting of maximum startup time for the replacement source			■
Options			
Communication option			
Power supply			
Control voltages (2)	110 V	■	■
	220 to 240 V 50/60 Hz	■	■
	380 to 415 V 50/60 Hz and 440 V 60 Hz	■	■
Operating thresholds			
Undervoltage	0.35 Un ⩽ voltage ⩽ 0.7 Un	■	■
Phase failure	0.5 Un ⩽ voltage ⩽ 0.7 Un		■
Voltage presence	voltage ⩾ 0.85 Un	■	■
IP degree of protection (EN 60529) and IK degree of protection against external mechanical impacts (EN 50102)			
Front	IP40	■	■
Side	IP30	■	■
Connectors	IP20	■	■
Front	IK07	■	■
Characteristics of output contacts (dry, volt-free contacts)			
Rated thermal current (A)	8		
Minimum load	10 mA at 12 V		
Output contacts:			
Position of the Auto/Stop switch		■	■
Load shedding and reconnection order			■
Generator set start order.			■

		AC				DC	
Utilisation category (IEC 947-5-1)		AC12	AC13	AC14	AC15	DC12	DC13
Operational current (A)	24 V	8	7	5	5	8	2
	48 V	8	7	5	5	2	-
	110 V	8	6	4	4	0.6	-
	220/240 V	8	6	4	3	-	-
	250 V	-	-	-	-	0.4	-
	380/415 V	5	-	-	-	-	-
	440 V	4	-	-	-	-	-
	660/690 V	-	-	-	-	-	-

(1) For example, 220 V single-phase or 220 V three-phase.
(2) The controller is powered by the ACP control plate. The same voltage must be used for the ACP plate, the IVE unit and the circuit breaker operating mechanisms. If this voltage is the same as the source voltage, then the "Normal" and "Replacement" sources can be used directly for the power supply. If not, an isolation transformer must be used.

Associated controllers
Controller installation

PB100857_SE.eps

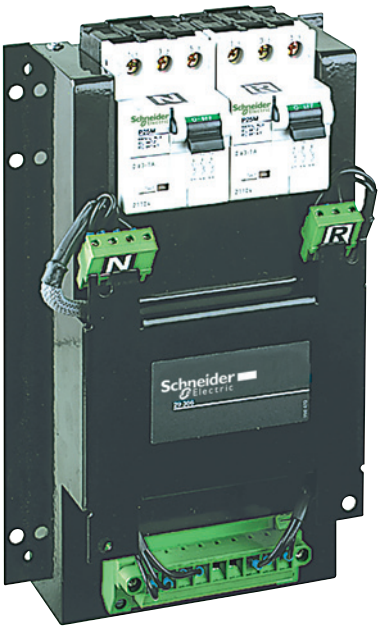

ACP control plate.

ACP control plate

The control plate provides in a single unit:
- protection for the BA or UA controller with two highly limiting P25M circuit breakers (infinite breaking capacity) for power drawn from the AC source
- control of circuit-breaker ON and OFF functions via two relay contactors
- connection of the circuit breakers to the BA or UA controller via a built-in terminal block.

Control voltages
- 110 V 50/60 Hz.
- 220 to 240 V 50/60 Hz.
- 380 to 415 V 50/60 Hz and 440 V 60 Hz.

The same voltage must be used for the ACP control plate, the controller and the circuit breaker operating mechanisms.

Installation

Connection between the ACP control plate and the IVE unit may use:
- wiring done by the installer
- prefabricated wiring (optional).

Installation of the BA and UA controllers

The BA and UA controllers may be installed in one of two manners:
- directly mounted on the ACP control plate
- mounted on the front panel of the switchboard
- if the length of the connection between the controller and the control plate (ACP) is less than or equal to 1 m, the connecting cable **ref. 29368** can be ordered as an optional extra. Cables longer than 1 m, but not longer than 2 m will be the responsibility of the installer.

DB126269.eps

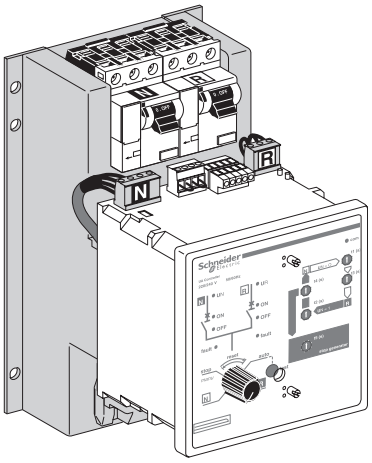

Mounting on the ACP control plate.

DB126270.eps

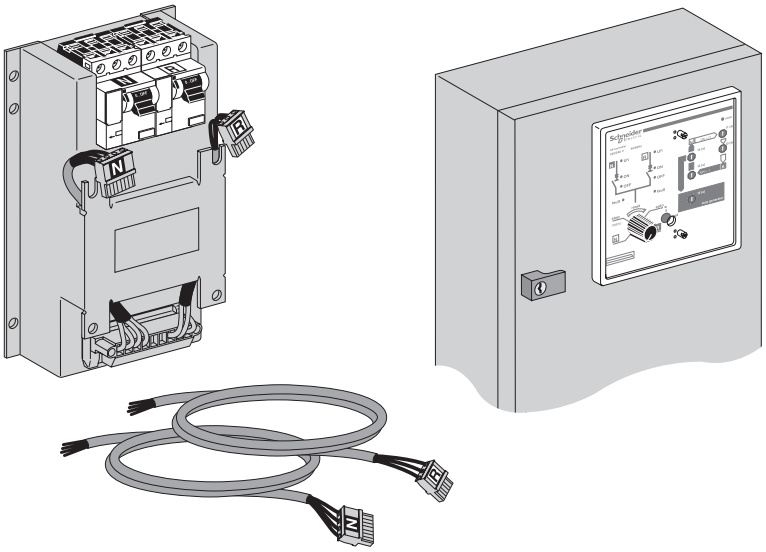

Mounting on the front panel of the switchboard.

BA controller

The BA controller is used to create simple source-changeover systems that switch from one source to another depending on the presence of voltage U_N on the “Normal” source.
It is generally used to manage two permanent sources and can control Compact NS, Compact NSX and Masterpact NT/NW circuit breakers and switch-disconnectors.

DB403841.eps

DB403838.eps

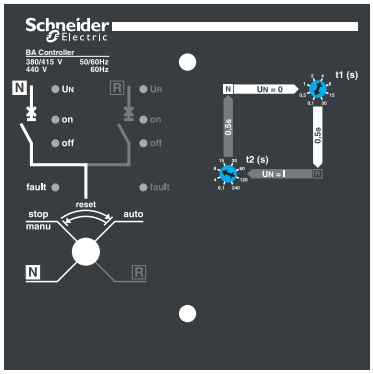

Front of the BA controller.

Operating modes

A four-position switch may be used to select:
- automatic operation
- forced operation on the “Normal” source
- forced operation on the “Replacement” source
- stop (both “Normal” and “Replacement” sources off).

Setting the time delays

Time delays are set on the front of the controller.
t1. delay between detection that the “Normal” source has failed and the transmission of the order to open the “Normal” source circuit breaker (adjustable from 0.1 to 30 seconds).
t2. delay between detection that the “Normal” source has returned and the transmission of the order to open the “Replacement” source circuit breaker (adjustable from 0.1 to 240 seconds).

Circuit breaker commands and status indications

The status of the circuit breakers is indicated on the front of the controller.
- ON, OFF, fault.

A built-in terminal block may be used to connect the following input/output signals:
- inputs:
  - voluntary order to transfer to source R (e.g. for special tariffs, etc.)
  - additional control contact (not part of the controller). Transfer to the “Replacement” source takes place only if the contact is closed (e.g. used to test the frequency of UR, etc.)
- outputs:
  - indication of operation in automatic or stop mode via changeover contacts.

Test

It is possible to test the operation of the BA controller by turning OFF (opening) the P25M circuit breaker for the “Normal” source and thus simulating a failure of voltage U_N.

Associated controllers

BA controller
Operating sequences

Switch set to Auto (automatic operation and special-tariff mode)

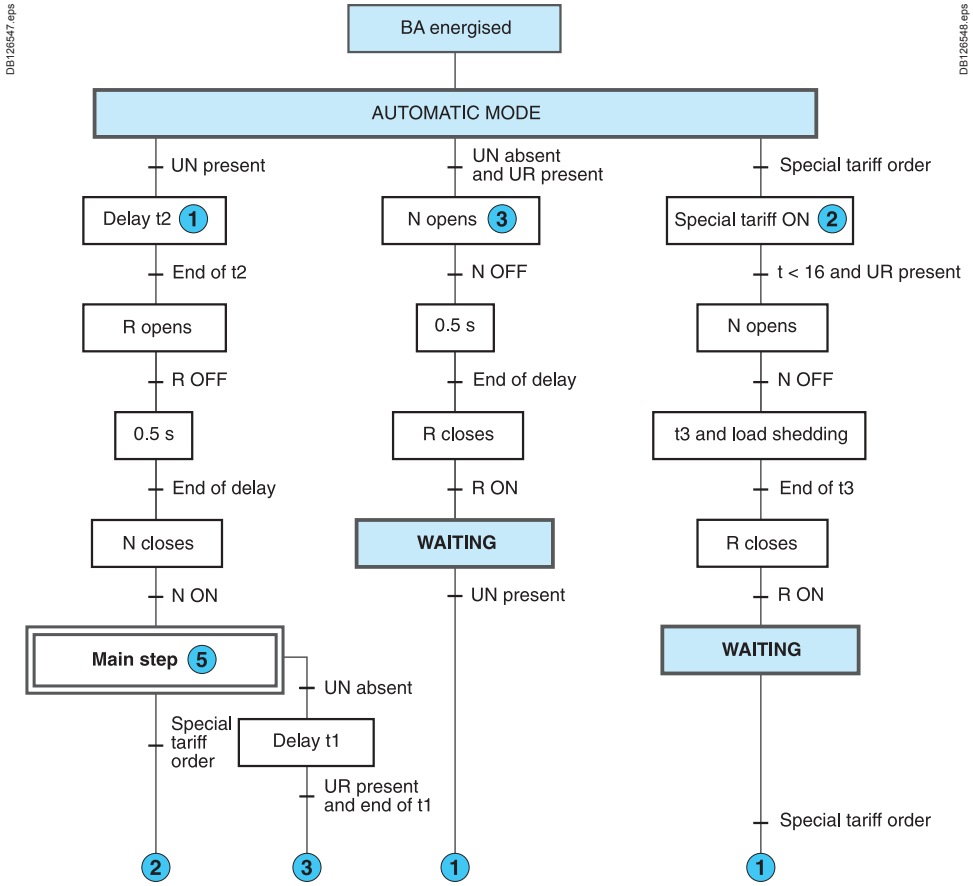

Switch set to the "N" position (forced operation on the "Normal" source)

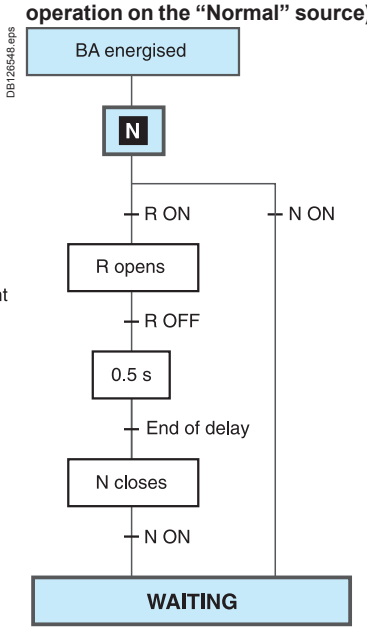

Switch set to the "R" position (forced operation on the "Replacement" source)

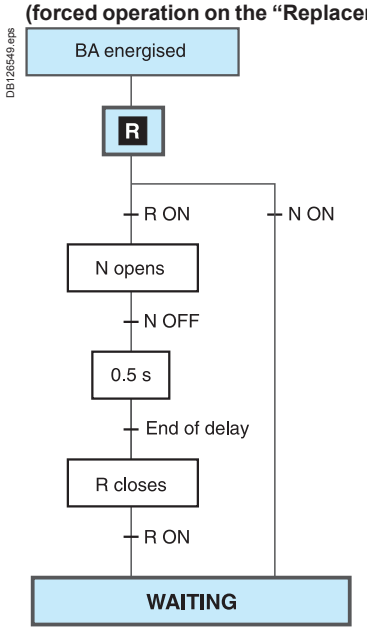

Switch set to the "Stop" position

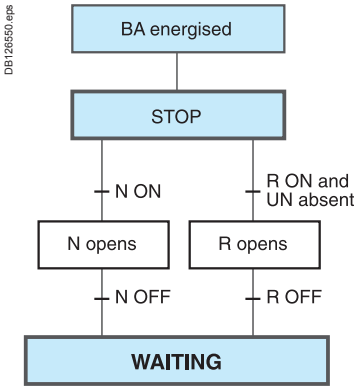

Key
UN : "Normal" source voltage
UR : "Replacement" source voltage
N : "Normal" source circuit breaker
R : "Replacement" source circuit breaker

1 *The number sends to the indicated step when the condition is true.*

WAITING The system exits this mode when the operating mode is modified or when an external event occurs (e.g. failure or return of UN).

UA controller

The UA controller is used to create a source-changeover system integrating the following automatic functions:
■ transfer from one source to another depending on the presence of voltage UN on the “Normal” source
■ startup of an engine generator set
■ shedding and reconnection of non-priority circuits
■ transfer to the “Replacement” source if one of the phases on the “Normal” source fails.
The UA controller can control Compact NS, Compact NSX and Masterpact NT/NW devices.

DB403842.eps

DB403837.eps

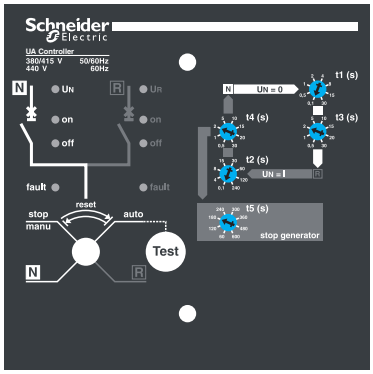

Front of the UA controller.

Operating modes

A four-position switch may be used to select:
■ automatic operation
■ forced operation on the “Normal” source
■ forced operation on the “Replacement” source
■ stop (both “Normal” and “Replacement” sources off, then manual operation).

Setting the time delays

Time delays are set on the front of the controller.
t1. delay between detection that the “Normal” source has failed and the transmission of the order to open the “Normal” source circuit breaker (adjustable from 0.1 to 30 seconds).
t2. delay between detection that the “Normal” source has returned and the transmission of the order to open the “Replacement” source circuit breaker (adjustable from 0.1 to 240 seconds).
t3. delay following opening of QN with load shedding and before closing of QR (adjustable from 0.5 to 30 seconds).
t4. delay following opening of QR with load reconnection and before closing of QN (adjustable from 0.5 to 30 seconds).
t5. delay for confirmation that UN is present before shutting down the engine generator set (adjustable from 60 to 600 seconds).
t6. delay before startup of the engine generator set (120 or 180 seconds).

Commands and indications

Circuit breaker status indications on the front of the controller:
■ ON, OFF, fault.
A built-in terminal block may be used to connect the following input/output signals:
■ inputs:
□ voluntary order to transfer to source R (e.g. for special tariffs, etc.)
□ additional control contact (not part of the controller). Transfer to the “Replacement” source takes place only if the contact is closed (e.g. used to test the frequency of UR, etc.)
■ outputs:
□ control of an engine generator set (ON / OFF)
□ shedding of non-priority circuits
□ indication of operation in automatic mode via changeover contacts.

Distribution-system settings

Three switches are used to:
■ select the type of “Normal” source, whether single-phase or three-phase (e.g. 240 V single-phase or 240 V three-phase)
■ select whether to remain (or not) on the “Normal” source if the “Replacement” source is not operational during operation on special tariffs
■ select the maximum permissible startup time for the engine generator set during operation on special tariffs (120 or 180 seconds).

Test

A pushbutton on the front of the controller may be used to test transfer from the “Normal” source to the “Replacement” source, then the return to the “Normal” source. The test lasts approximately three minutes.

COM communications option

Using the internal bus protocol, this option may be used to remote the following information:
■ circuit breaker status (ON, OFF, fault trip)
■ presence of the “Normal” and “Replacement” voltages
■ presence of an order for forced operation (e.g. special tariffs)
■ settings and configuration information
■ status of non-priority circuits (loads shed or not)
■ position of the switch (stop, auto, forced operation on the “Normal” source, forced operation on the “Replacement” source).

Associated controllers

UA controller
Operating sequences
Forced operation mode

Switch set to the "R" position (forced operation on the "Replacement" source)

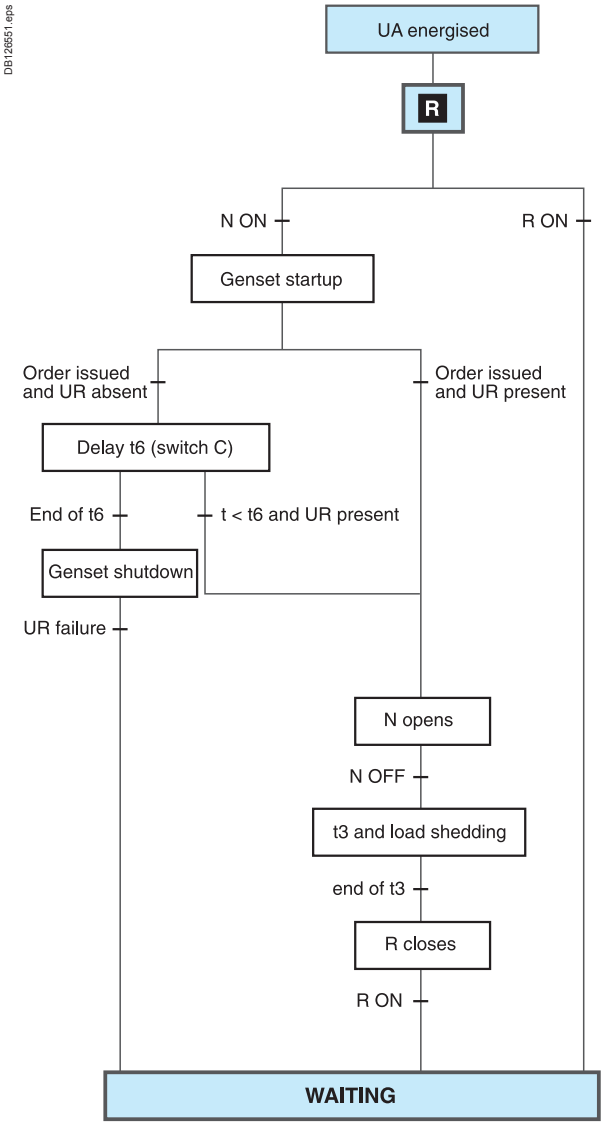

Switch set to the "N" position (forced operation on the "Normal" source)

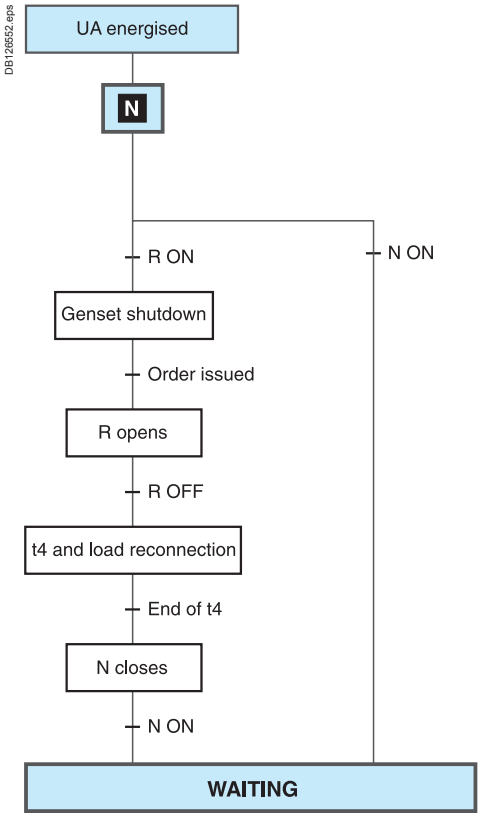

Switch set to the "Stop" position

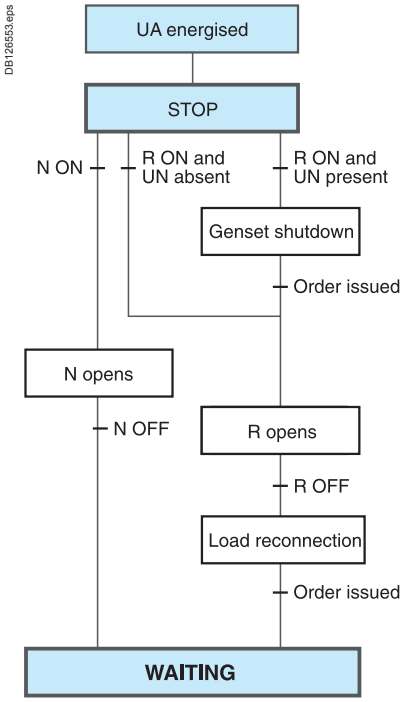

WAITING The system exits this mode when the operating mode is modified or when an external event occurs (e.g. failure or return of UN).

When the UA controller is not energised, the output for generator set startup is activated).

Key
UN : "Normal" source voltage
UR : "Replacement" source voltage
N : "Normal" source circuit breaker
R : "Replacement" source circuit breaker

Switch set to the "Auto" position (special-tariff mode)

DB126554.eps

WAITING The system exits this mode when the operating mode is modified or when an external event occurs (e.g. failure or return of UN).

When the UA controller is not energised, the output for generator set startup is activated).

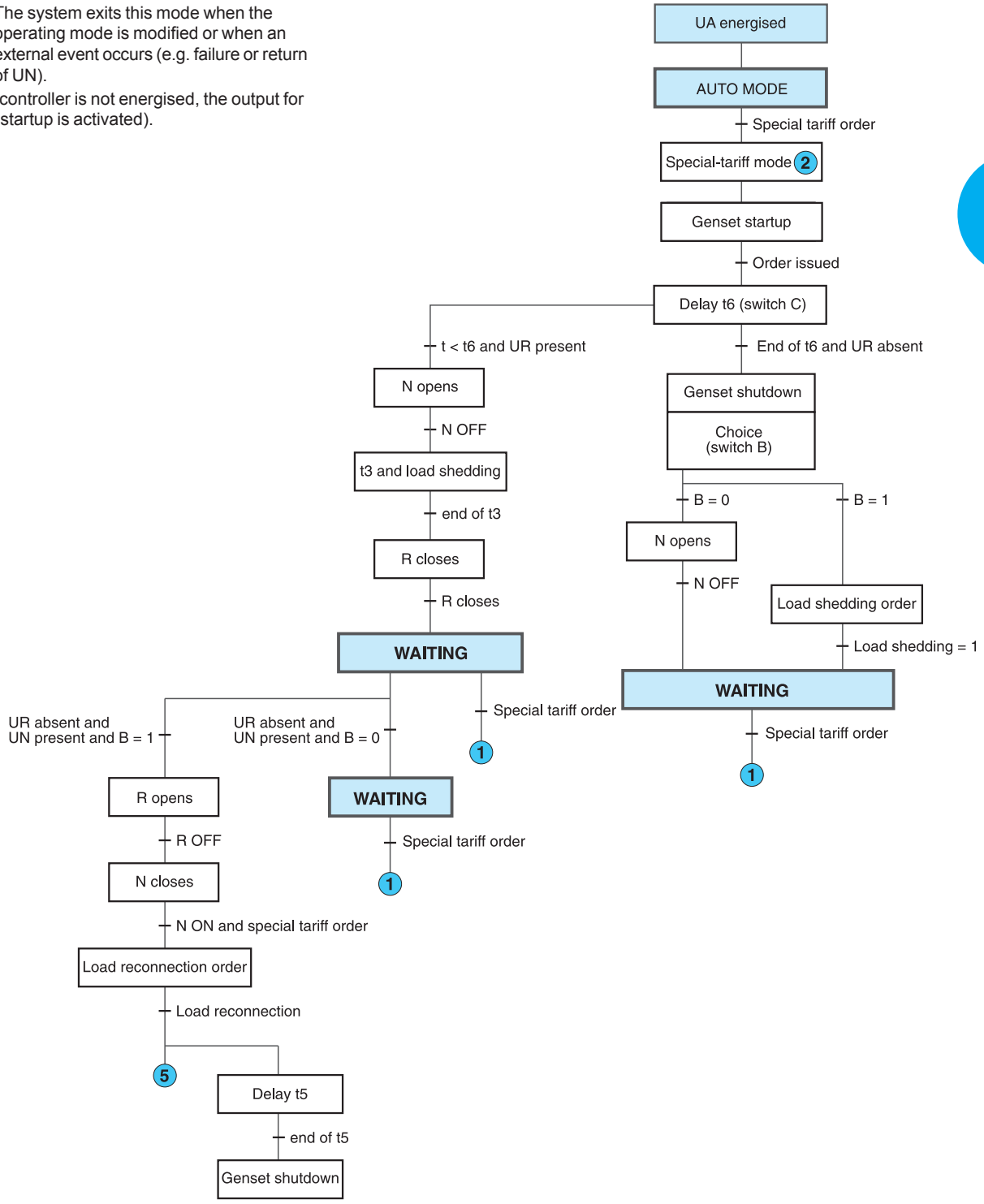

Key
UN : "Normal" source voltage
UR : "Replacement" source voltage
N : "Normal" source circuit breaker
R : "Replacement" source circuit breaker
B : Penalties accepted (N ON), i.e. B = 1

1 *The number sends to the indicated step when the condition is true.*

Associated controllers

UA controller
Operating sequences
Test mode and automatic operation

Switch set to the "Auto" position (automatic operation and test mode).

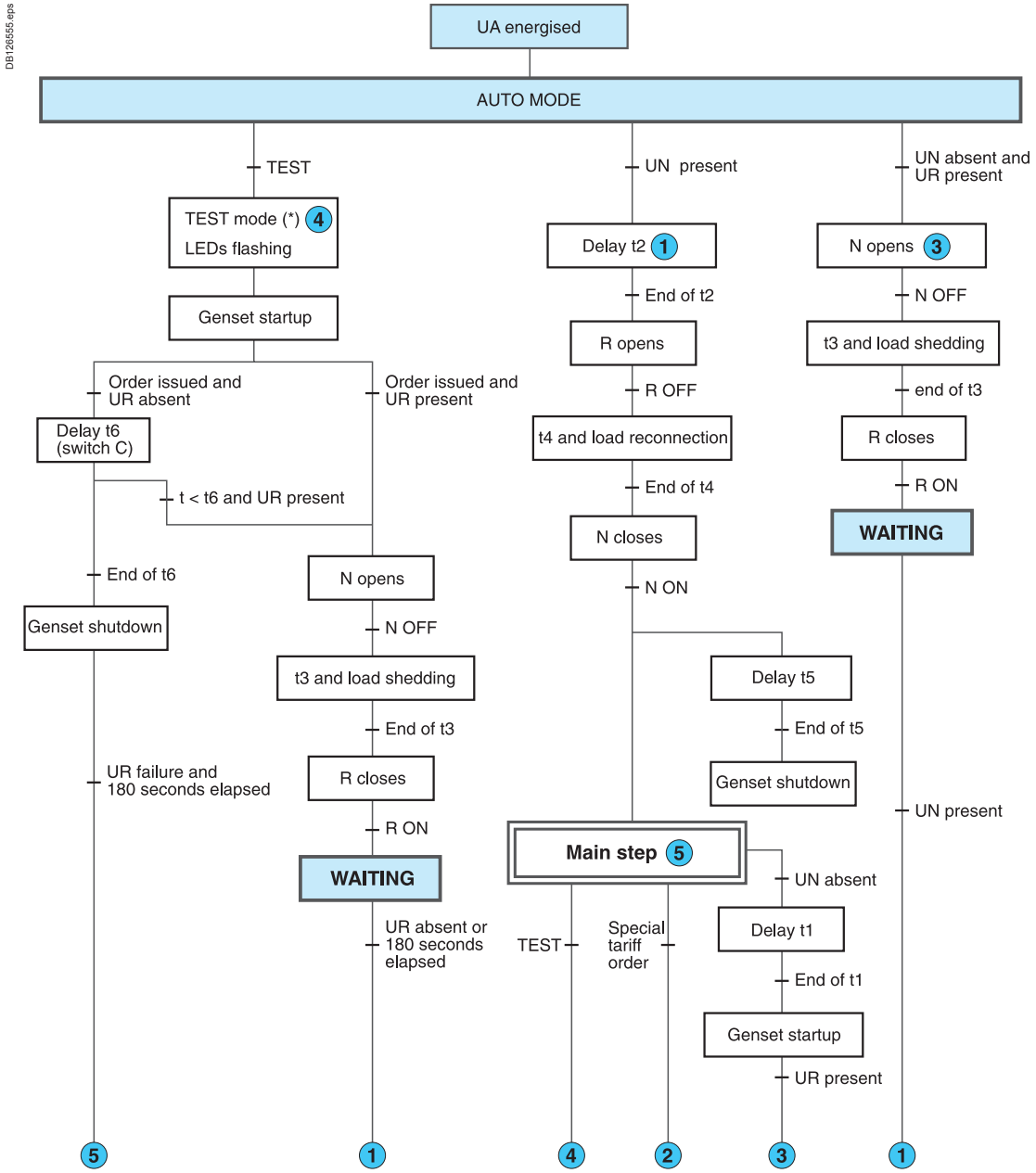

WAITING The system exits this mode when the operating mode is modified or when an external event occurs (e.g. failure or return of UN).

When the UA controller is not energised, the output for generator set startup is activated).

Key
UN : "Normal" source voltage
UR : "Replacement" source voltage
N : "Normal" source circuit breaker
R : "Replacement" source circuit breaker
B : Penalties accepted (N ON), i.e. B = 1
(*) The test lasts 180 seconds.

1 *The number sends to the indicated step when the condition is true.*

BA controller

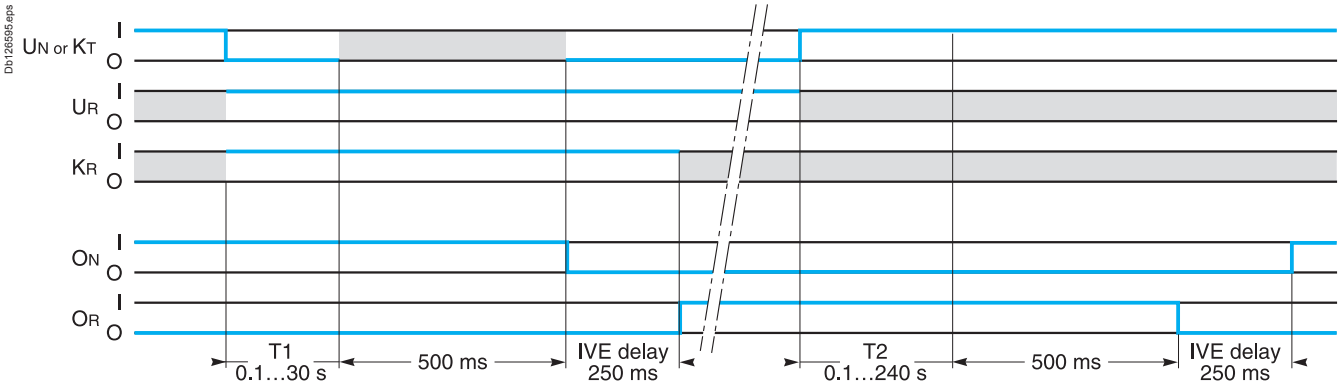

Inputs
UN : "Normal" source voltage
UR : "Replacement" source voltage
KT : order for forced-operation on R
KR : additional check before transfer

Outputs
QN : "Normal" source circuit breaker
QR : "Replacement" source circuit breaker

UA controller

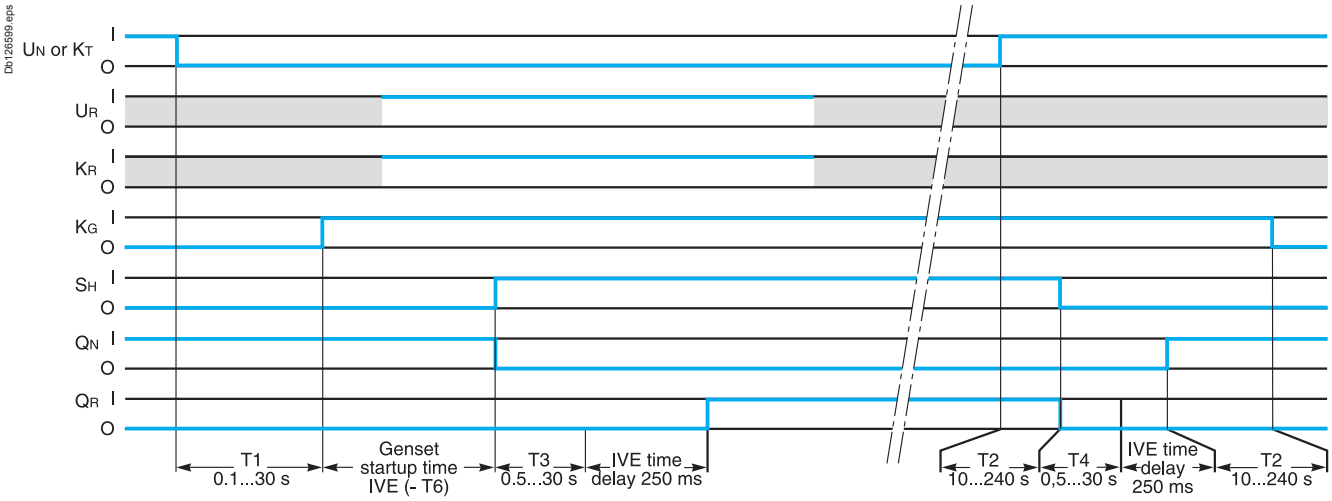

Inputs
UN : "Normal" source voltage
UR : "Replacement" source voltage
KT : order for forced-operation on R
KR : additional check before transfer

Outputs
KG : order to the genset
SH : load-shedding order
QN : "Normal" source circuit breaker
QR : "Replacement" source circuit breaker

Key
O: OFF (circuit open)
I: ON (circuit closed
: either ON or OFF.

Important
If UR is not ON when the transfer order is issued (KT or UN), the sequence is not carried out.
If KR status is not ON when the transfer order is issued (KT or UN), the transfer sequence is carried out later when KR status becomes I.

TOOLS

schneider-electric.com

This international site allows you to access all the Schneider Electric Solution and Product information via :

- comprehensive descriptions
- range data sheets
- a download area
- product selectors
- ...

You can also access the information dedicated to your business and get in touch with your Schneider Electric country support.

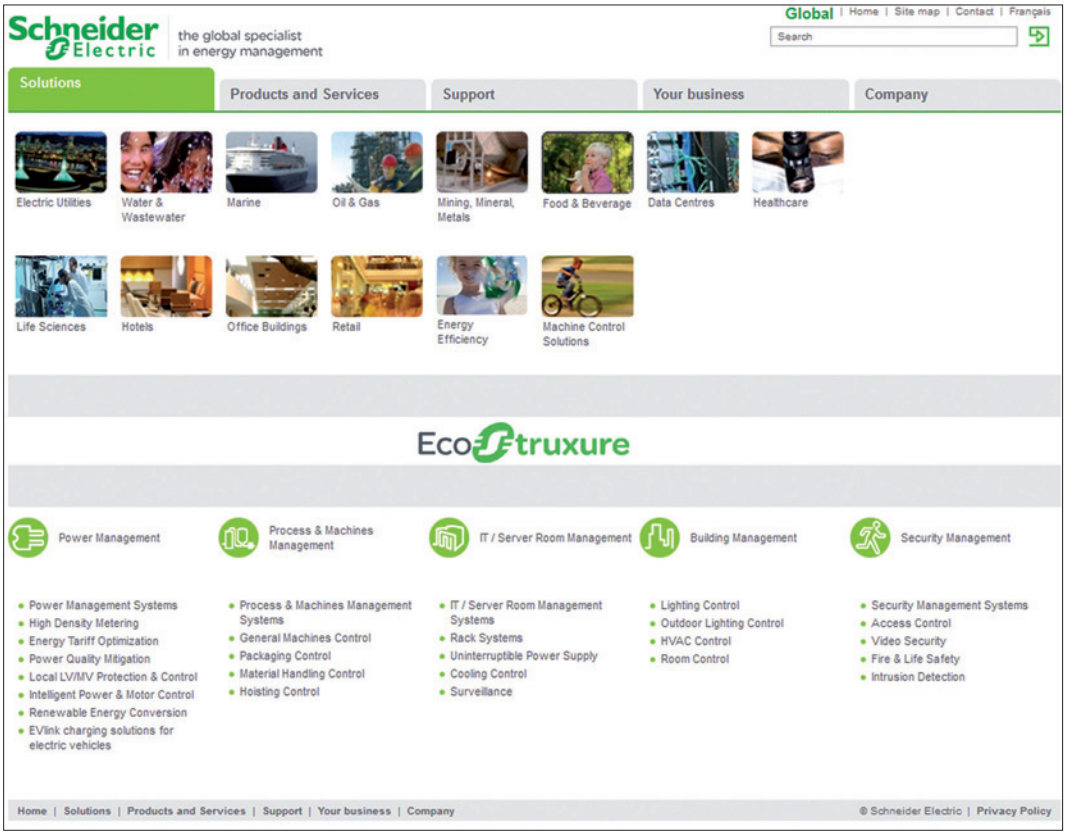

Dimensions

Presentation 2
Functions and characteristics A-1

Compact INS/INV source-changeover systems **B-2**

Compact NSX source-changeover systems **B-4**

Downstream coupling accessory for Compact INS/INV, Compact NSX source-changeover systems **B-6**

Compact NS source-changeover systems **B-7**

Masterpact NT/NW source-changeover systems
Interlocking using connecting rods B-8

Compact NSX source-changeover systems
Interlocking on a base plate B-9

Compact NS and Masterpact NT source-changeover systems
Interlocking using connecting rods B-13

Masterpact NW source-changeover systems
Interlocking using connecting rods B-14

Compact NS and Masterpact NT/NW source-changeover systems
Interlocking using cables B-15

Compact NS and Masterpact NT source-changeover systems
Interlocking using cables B-16

Masterpact NT/NW source-changeover systems
Interlocking using cables B-17

Masterpact NW source-changeover systems
Interlocking using cables B-18
IVE unit, UA/BA automatic controllers B-20

Electrical diagrams C-1
Catalogue numbers and order forms D-1

Compact INS/INV source-changeover systems

Class PC

Interlocking of direct rotary handles

Compact INS/INV250 - 100 to 250 A / Compact INS/INV320/400/500/630

Dimensions

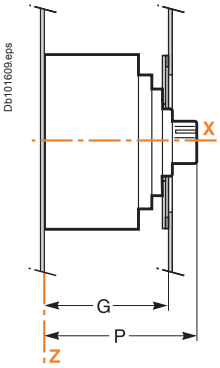

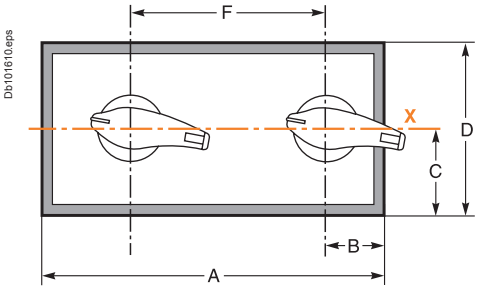

Front-panel cutout

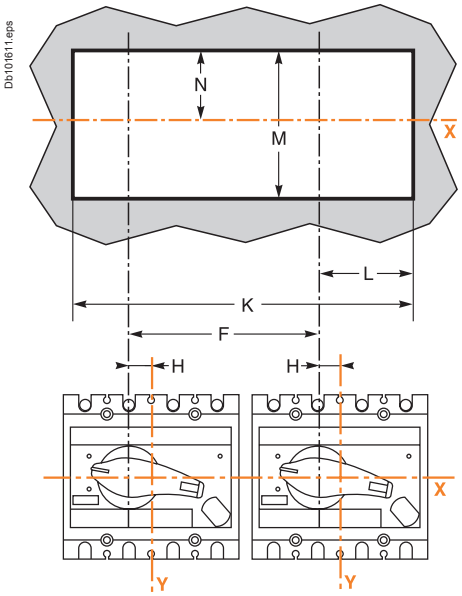

Dimensions (mm)

Type	A	B	C	D	F	G	H	K	L	M	N	P
INS/INV250 - 100 to 250 A	325	90	87.5	175	156	106	17.5	295	75.5	150	75	131
INS/INV320/400/500/630	416	115	100	200	210	130	22.5	386	100	175	74.5	160.4

Note: X and Y are the symmetry planes for a 3-pole device.

Interlocking of extended rotary handles

Compact INS40/63/80/100/125/160 / Compact INS/INV250 - 100 to 250 A / Compact INS/INV320/400/500/630

Dimensions

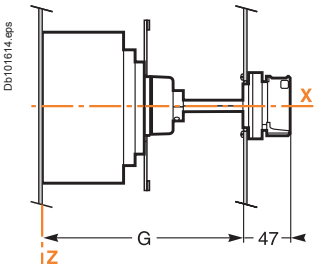

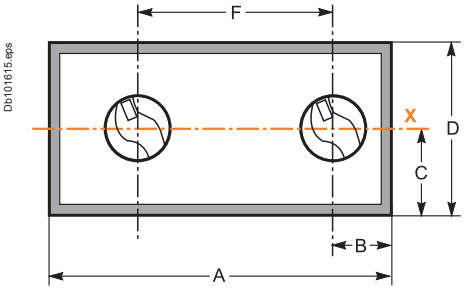

Front-panel cutout

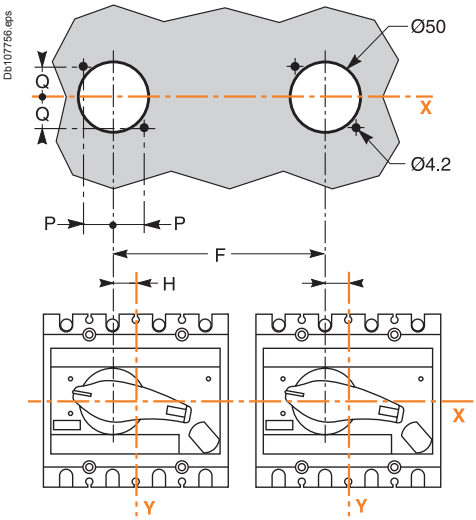

Dimensions (mm)

Type	A	B	C	D	F	G min	G max	H	P	Q
INS40/63/80	325	90	87.5	175	156	155	396	0	25.5	25.5
INS100/125/160	325	90	87.5	175	156	200	441	0	25.5	25.5
INS/INV250 - 100 to 250 A	325	90	87.5	175	156	185	600	17.5	25.5	25.5
INS320/400/500/630	416	115	100	200	210	204	600	22.5	30.8	30.8

Class PC

Complete source-changeover assembly

Assembly for INS250 - 100 to 250 A / Assembly for INS320/400/500/630

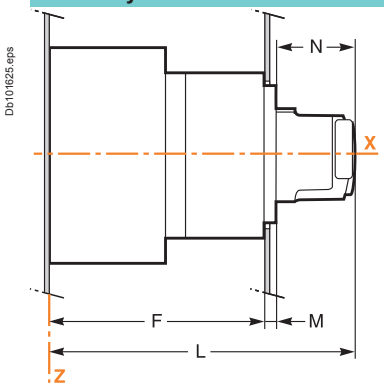

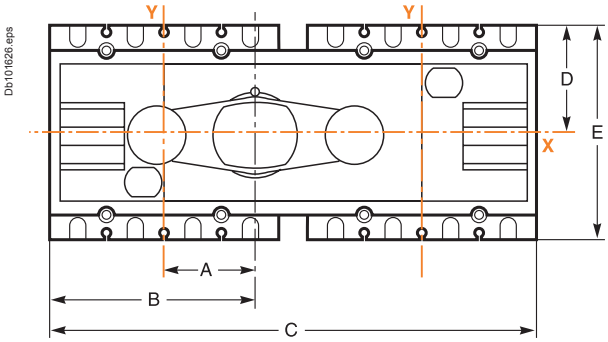

Front-panel cutout

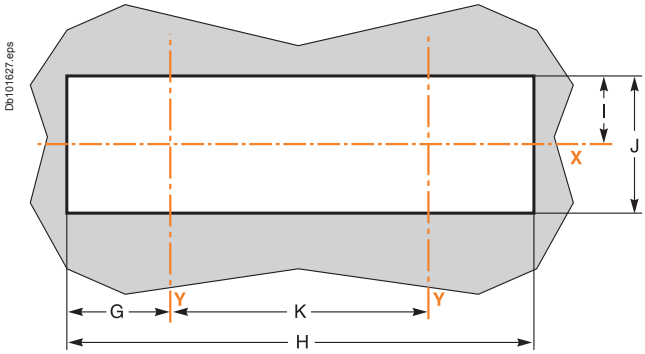

Dimensions (mm)

Type	A	B	C	D	E	F	G	H	I	J	K	L	M	N
INS250 - 100 to 250 A	60.4	130.4	296	68	136	131	61.8	279.3	42	84	156	186.5	5.5	50
INS320/400/500/630	82.5	175	395	102.5	205	155	87	383.7	64	128	210	213	8	50

Dimensions of the complete source-changeover assembly with an extended handle

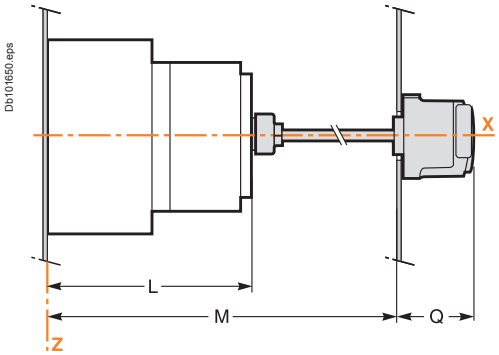

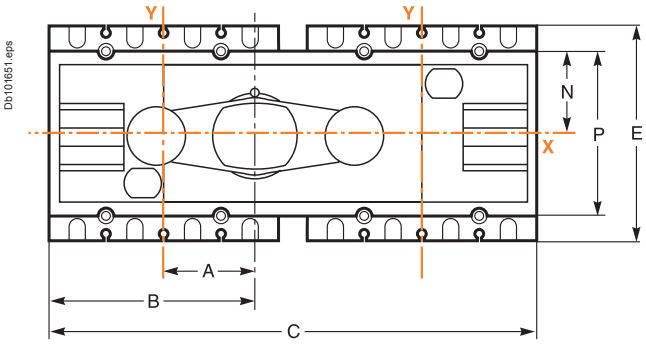

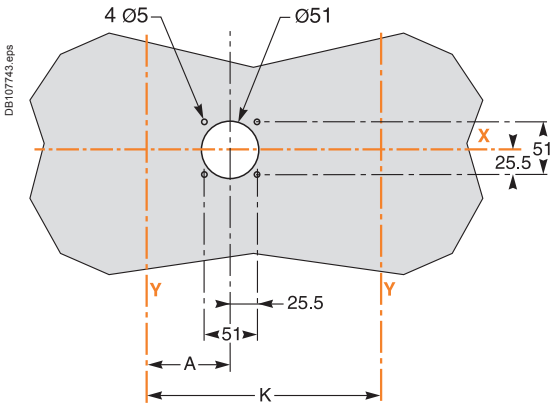

Dimensions (mm)

Type	A	B	C	E	K	L	M	N
INS250 - 100 to 250 A	60.4	130.4	295	136	156	138.5	631	50
INS320/400/500/630	82.5	175	395	205	210	162.5	658	75

Dimensions (mm)

Type	P	Mmax	Mmin	Q
INS250 - 100 to 250 A	100	567.5	195	64
INS320/400/500/630	150	593	220.5	64

Note: lines X and Y indicate the axes of symmetry of the switch-disconnector.
Reference plane Z corresponds to the back of the switch-disconnector.

Compact NSX source-changeover systems

Class PC

Interlocking of direct rotary handles

Compact NSX100 NA to NSX630 NA

Dimensions

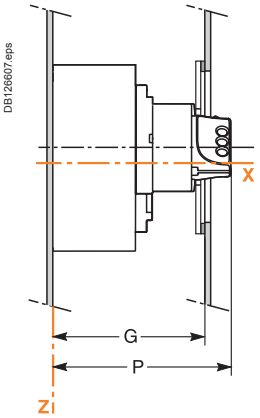

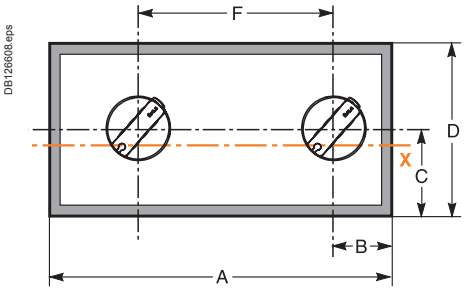

Front-panel cutout

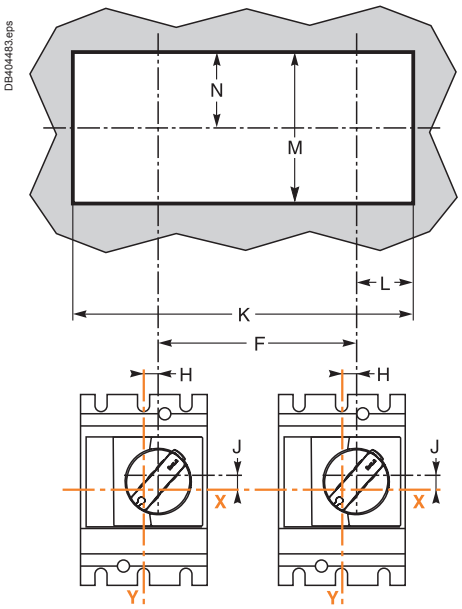

Dimensions (mm)

	A	B	C	D	F	G	H	J	K	L	M	N	P
NSX100/160/250 NA	325	90	87.5	175	156	133	9.25	9	295	75.5	150	75	155
NSX400/630 NA	416	115	100	200	210	157	5	24.6	386	100	175	74.5	179

Interlocking of extended rotary handles

Compact NSX100 NA to NSX630 NA

Dimensions

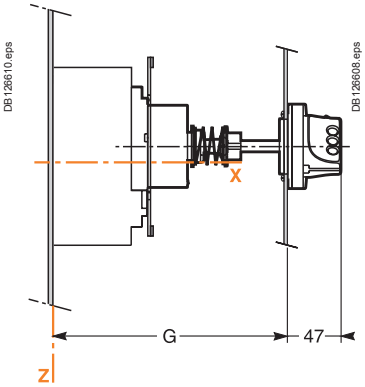

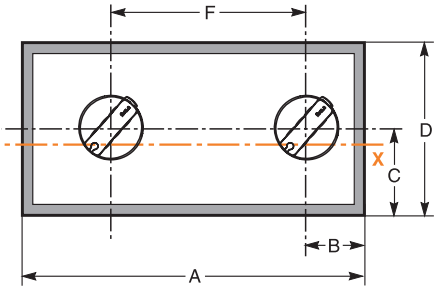

Front-panel cutout

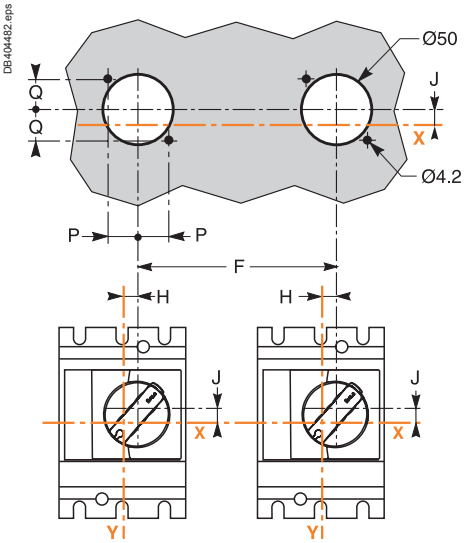

Dimensions (mm)

Type	A	B	C	D	F	G min	G max	H	J	P	Q
NSX100/160/250 NA	325	90	87.5	175	156	171	600	9.25	9	25.5	25.5
NSX400/630 NA	416	115	100	200	210	195	600	5	24.6	30.8	30.8

Class PC

Interlocking of toggles

Compact NSX100 NA to NSX630 NA

Dimensions

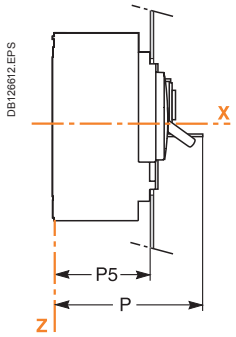

3 poles

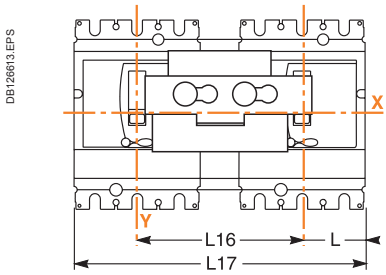

4 poles

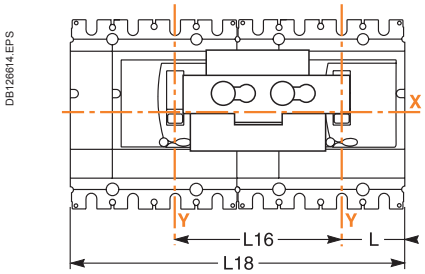

Front-panel cutout

3 poles on left

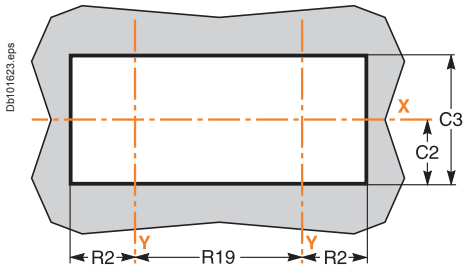

4 poles on left

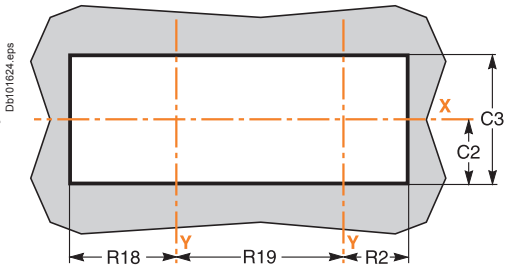

Dimensions (mm)

Type	C2	C3	L	L16	L17	L18	R2	R18	R19	P5	P
NSX100/160/250 NA	54	108	52.5	140	245	280	54	89	140	83	120
NSX400/630 NA	92.5	182	70	185	325	370	71.5	116.5	185	107	150

Downstream coupling accessory for Compact INS/INV, Compact NSX source-changeover systems

Class PC

Downstream coupling accessory

Compact NSX100 NA to NSX630 NA (only for Compact NSX fixed devices)

Dimensions for Compact NSX

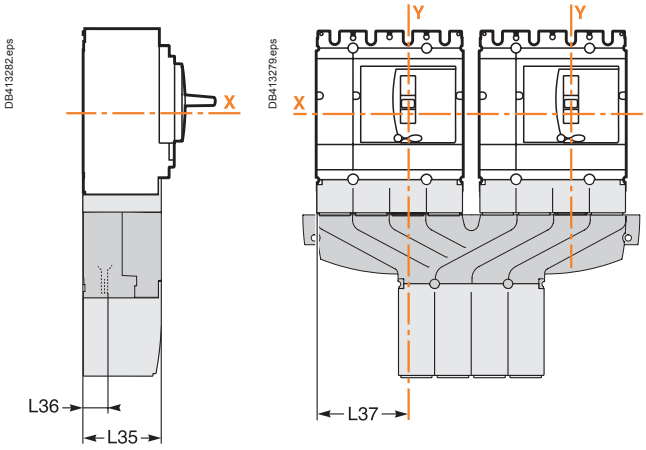

Dimensions for Compact INS/INV

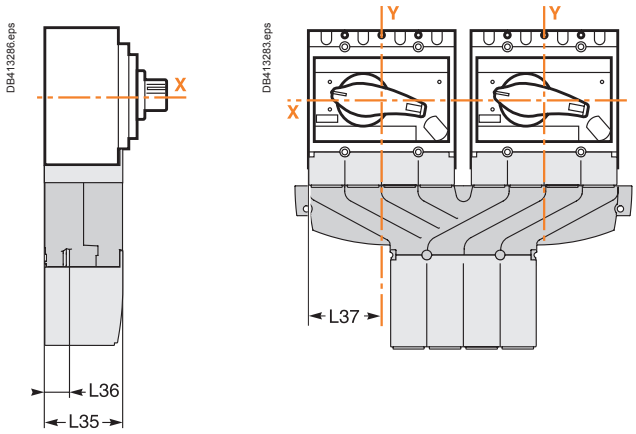

Dimensions

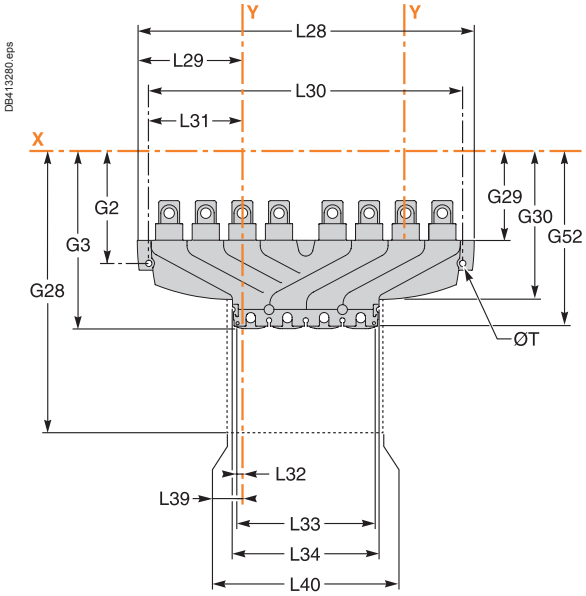

Connection

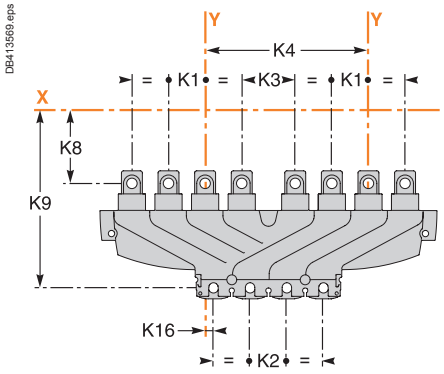

Dimensions (mm)

Type	G2	G3	G28	G29	G30	G52	K1	K2	K3	K4	K8	K9	K16
NSX100/160/250 NA	118	181.5	244.5	96	152.5	178	35	35	51	156	70	170	8
NSX400/630 NA	165.9	264.7	337.5	143.5	220.5	264.7	45	45	75	210	113.5	250.7	15
INS250 - 100 to 250 A	105.5	169	232	83.5	140	165.5	35	35	51	156	57.5	157.5	25.5
INS320/400/500/630	141	240.7	313	119	195.6	240	45	45	75	210	88.5	225.7	37.5

Dimensions (mm)

Type	L28	L29	L30	L31	L32	L33	L34	L35	L36	L37	L39	L40	ØT
NSX100/160/250 NA	320	99.5	300	89.5	4.73	130.5	139.5	74.5	19.5	87.5	9.5	140	6
NSX400/630 NA	425	130	400	117.5	5.15	175.3	184.7	98.5	26	115	9.85	184.7	6
INS250 - 100 to 250 A	320	83	300	72	12.8	130.5	139.5	74.5	21.5	70	8.5	140	6
INS320/400/500/630	425	107.5	400	95	17.35	175.3	184.7	98.5	26	92.5	12.65	184.7	6

Note: *coupling accessory: only for changeover systems using fixed versions of Compact NSX circuit breakers.*

Class PC

Interlocking of extended rotary handles

Compact NS630b NA to NS1600 NA

Dimensions

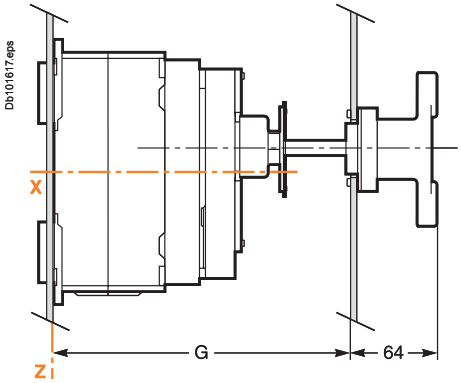

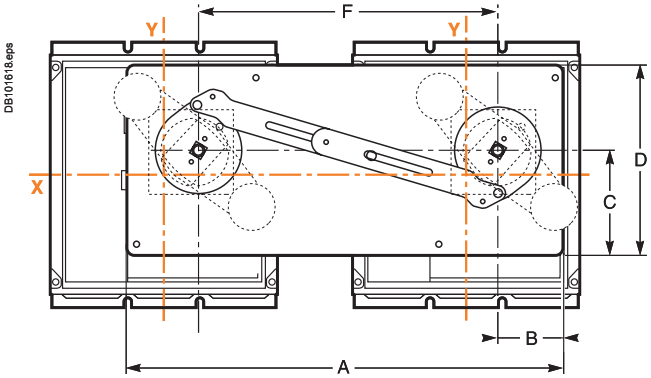

Front-panel cutout

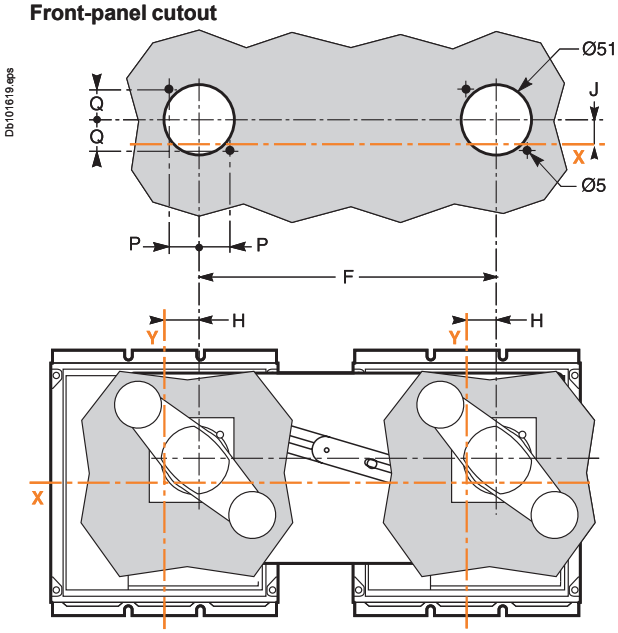

Dimensions (mm)

Type	A	B	C	D	F	G min	G max	H	J	P	Q	R
NS630b/800/1000/1200/1600 NA	411	63.5	98	175	280	218	605	25	24	25.5	25.5	64

Masterpact NT/NW source-changeover systems

Interlocking using connecting rods

Class PC

Interlocking using connecting rods

Two Masterpact NT devices one above the other (NA/HA/HF)

Fixed devices

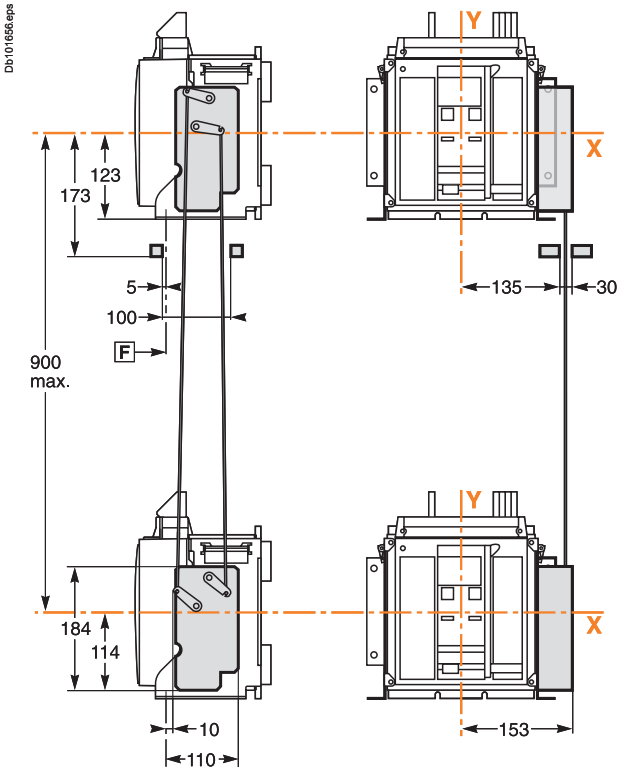

Withdrawable devices

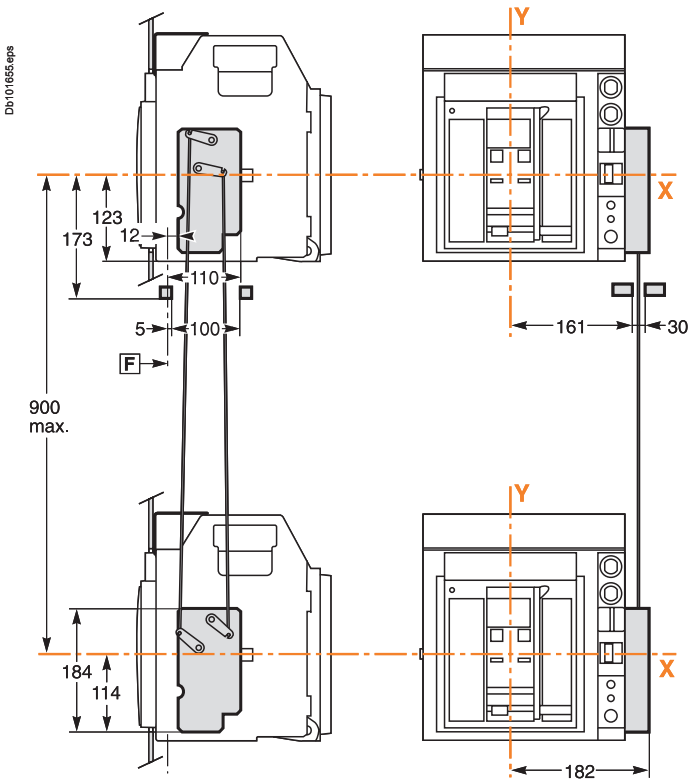

Two Masterpact NW devices one above the other (NA/HA/HF)

Fixed devices

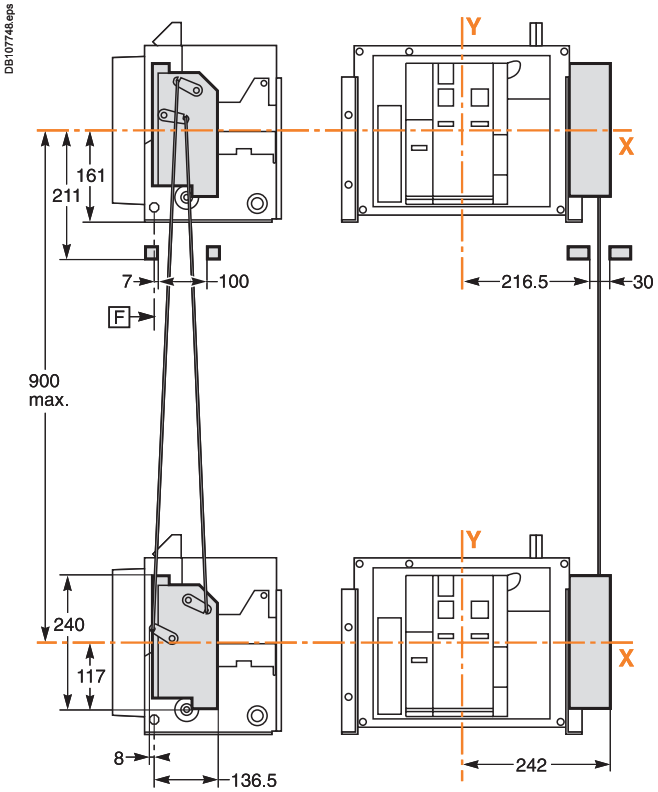

Withdrawable devices

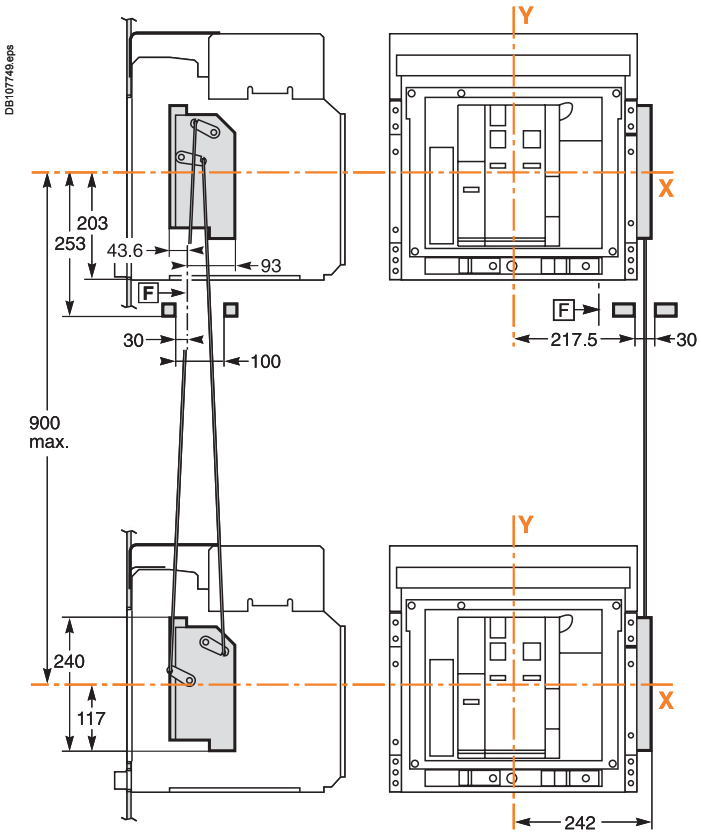

Compact NSX100 to NSX250 and Compact NSX100 NA to NSX250 NA

Dimensions, 3 or 4 poles

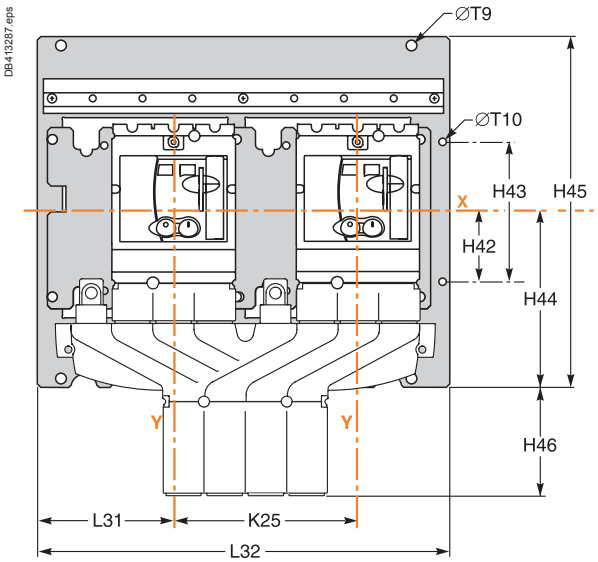

Fixed device

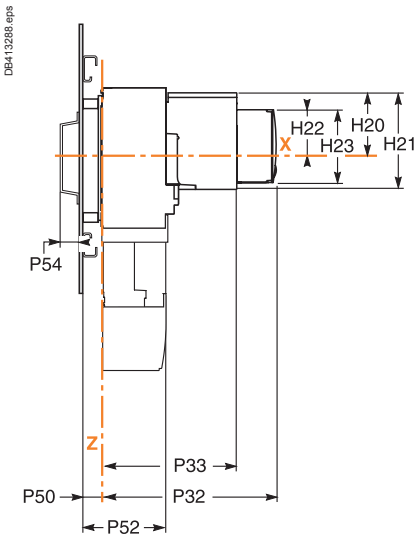

Withdrawable device

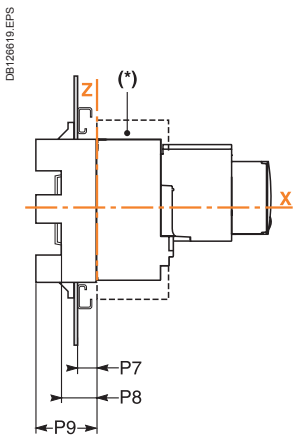

(*) Short terminal shields are mandatory.

Vertical mounting

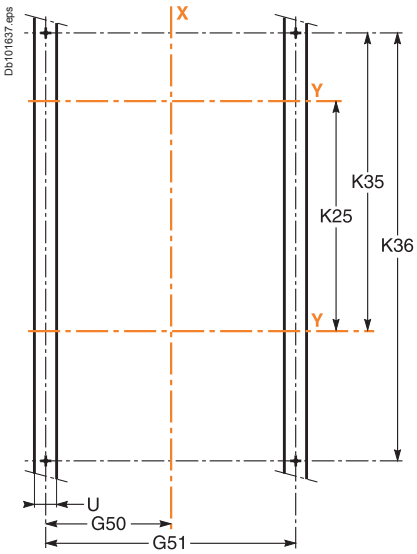

Horizontal mounting

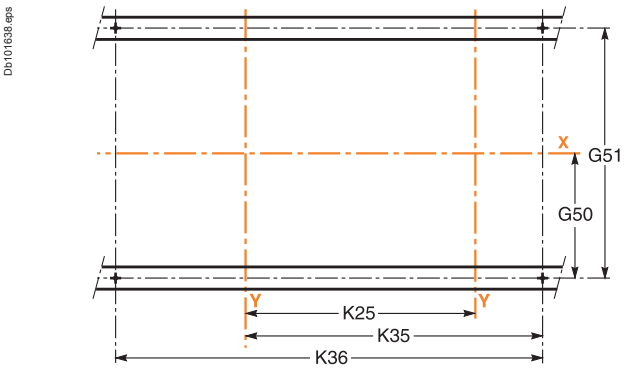

Dimensions (mm)

Type	G50	G51	H20	H21	H22	H23	H42	H43	H44	H45	H46	K25	K35	K36
NSX100/160/250	137.5	285	62.5	97	45.5	73	60	120	144.5	300	37	156	210.5	300
NSX400/630	180	360	100	152	83	123	60	120	189	378	77	210	282.5	400

Dimensions (mm)

Type	L31	L32	P7	P8	P9	P32	P33	P50	P52	P54	ØT9	ØT10	U
NSX100/160/250	110.5	354	25	45	75	182	143	25	99.5	21	9	6	≤ 32
NSX400/630	150.5	466	25	45	100	256	215	25	123	21	9	6	≤ 32

Note: coupling accessory: only for changeover systems using fixed versions of Compact NSX circuit breakers.

Compact NSX source-changeover systems

Interlocking on a base plate

Class PC and CB

Compact NSX400 to NSX630 and Compact NSX400 NA to NSX630 NA

Dimensions, 3 or 4 poles

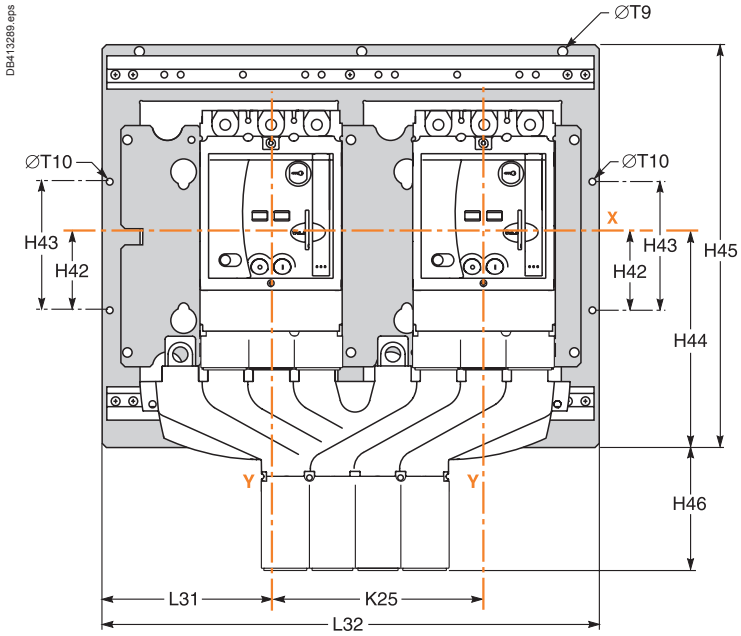

Fixed device

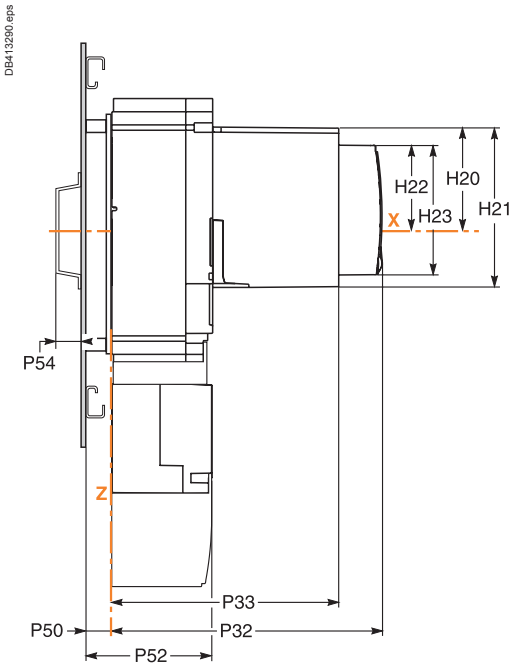

Withdrawable device

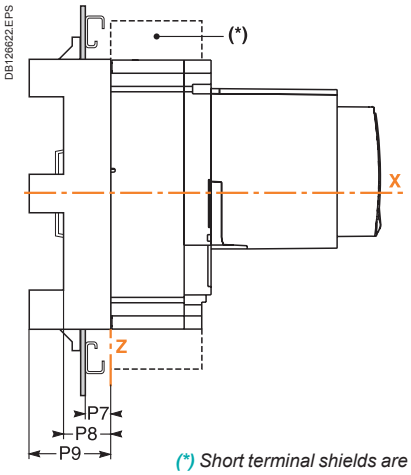

Note: coupling accessory: only for changeover systems using fixed versions of Compact NSX circuit breakers.

(*) Short terminal shields are mandatory.

Dimensions

Vertical mounting

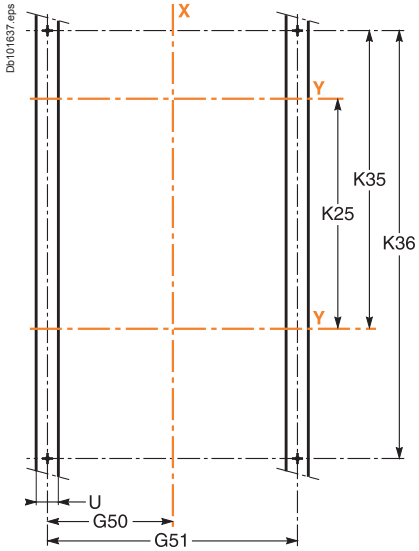

Horizontal mounting

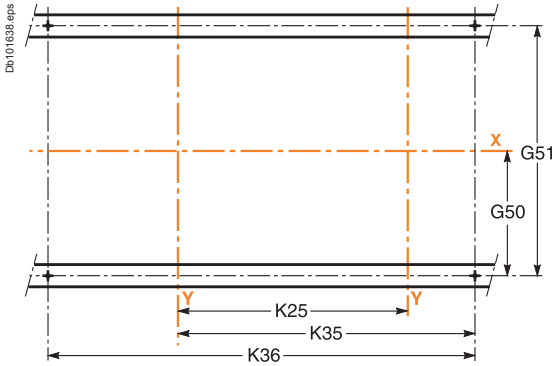

Note: dimensions see page B-9.

"Normal" and "Replacement" source devices: NSX100 to NSX250

Dimensions

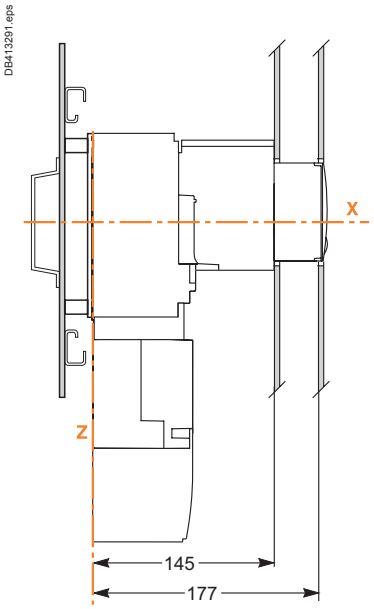

Front-panel cutout

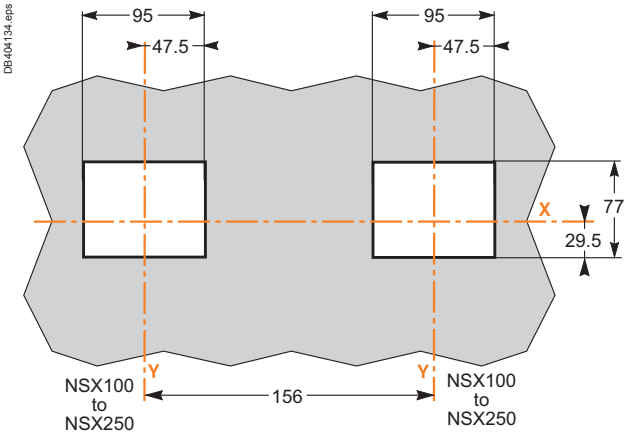

"Normal" and "Replacement" source devices: NSX400 to NSX630

Dimensions

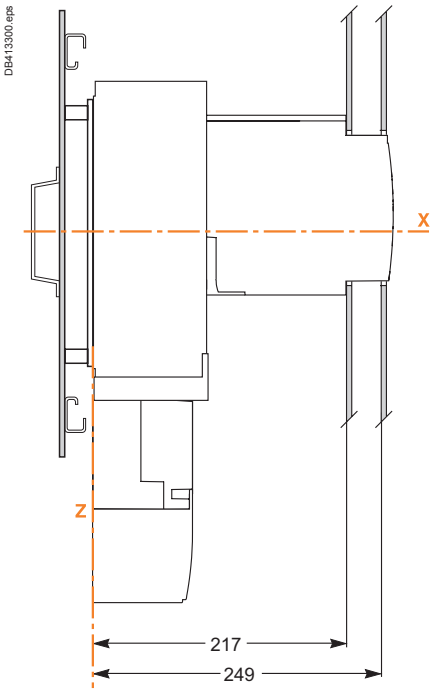

Front-panel cutout

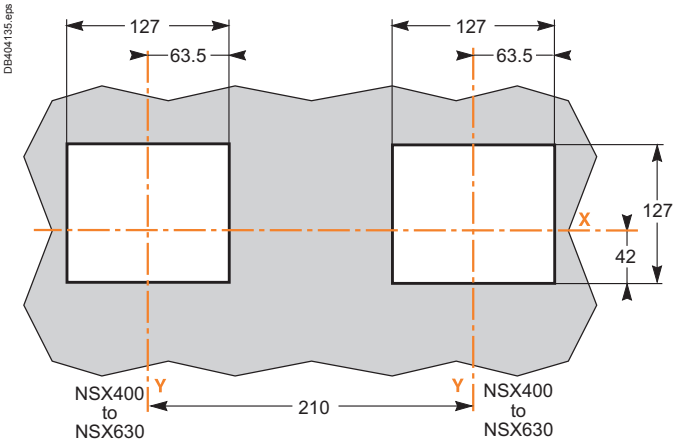

Note for Compact NSX:
For dimensions with the accessories (IP40 escutcheons and Vigi escutcheon protection collars), see Catalogue Compact.

Compact NSX source-changeover systems

Interlocking on a base plate

Class PC and CB

NSX400 to NSX630 as the “Normal” device, NSX100 to NSX250 as the “Replacement” device

Dimensions

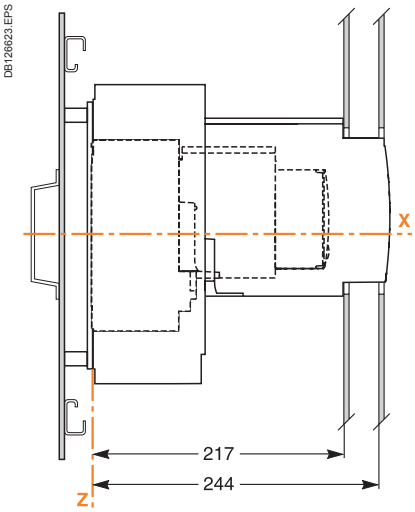

Front-panel cutout

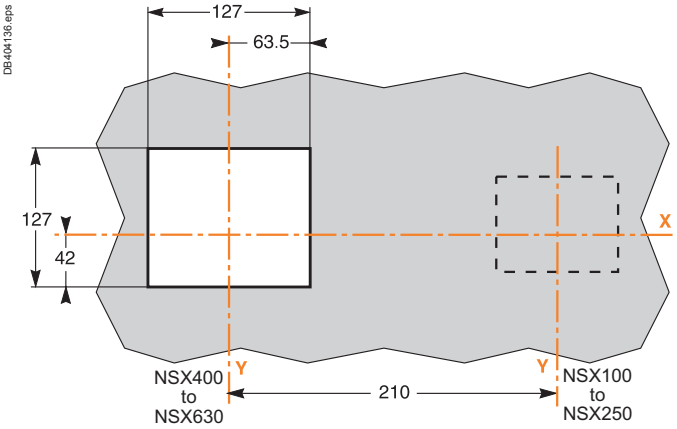

Class CB

Two Compact NS630b to NS1600 devices one above the other

Fixed devices

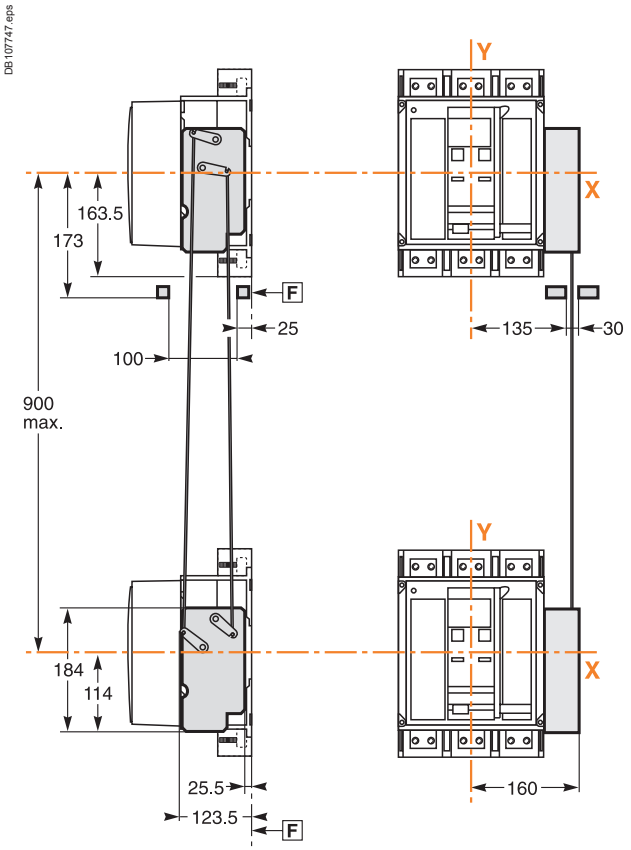

Withdrawable devices

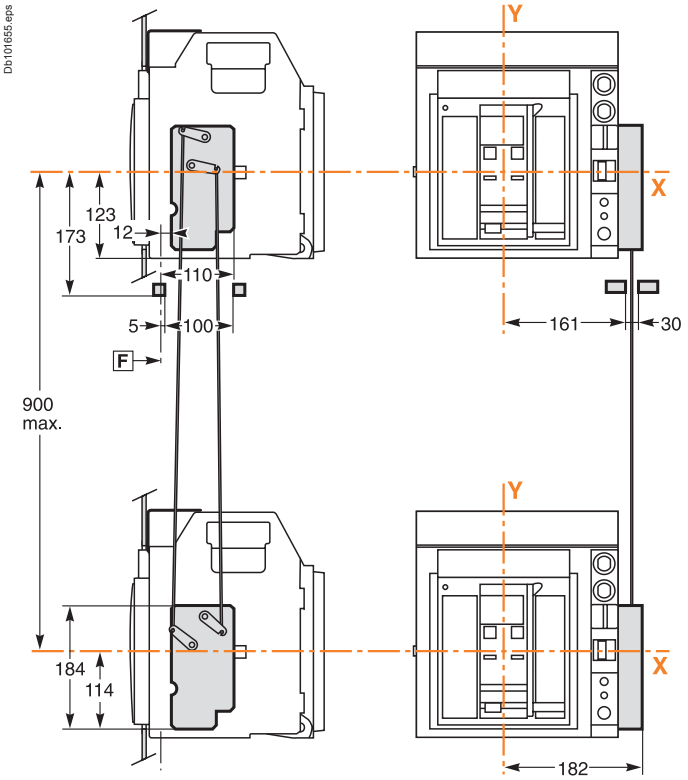

Two Masterpact NT devices one above the other

Fixed devices

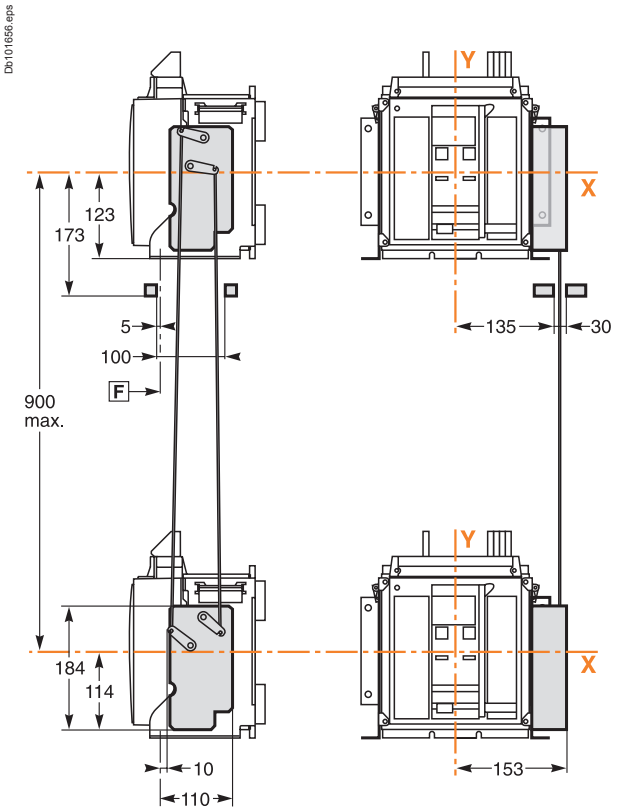

Withdrawable devices

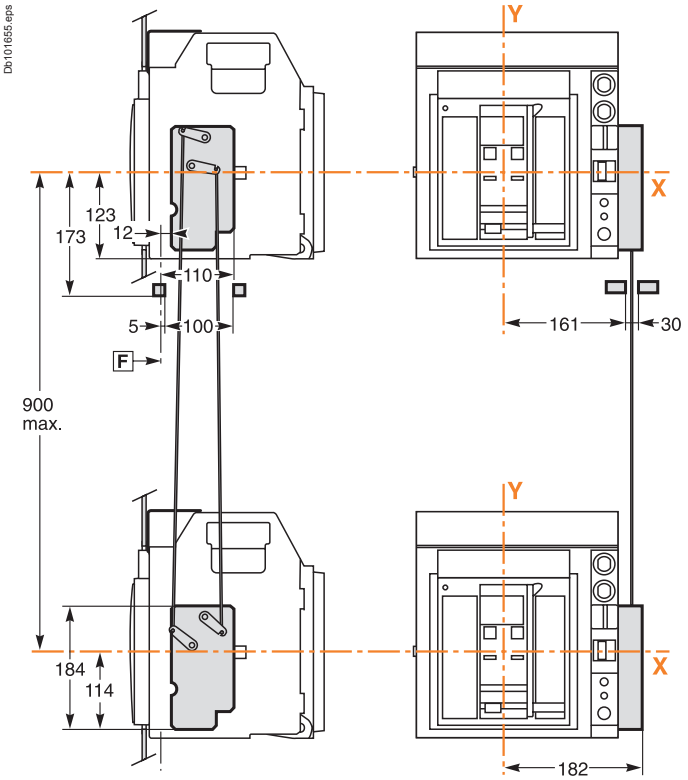

Masterpact NW source-changeover systems

Interlocking using connecting rods

Class CB

Two Masterpact NW devices one above the other

Fixed devices

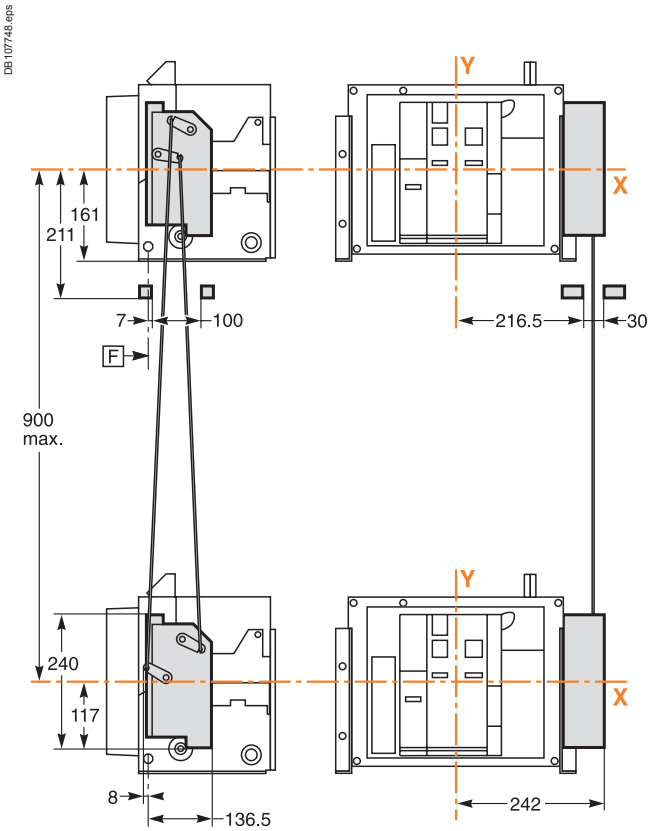

Withdrawable devices

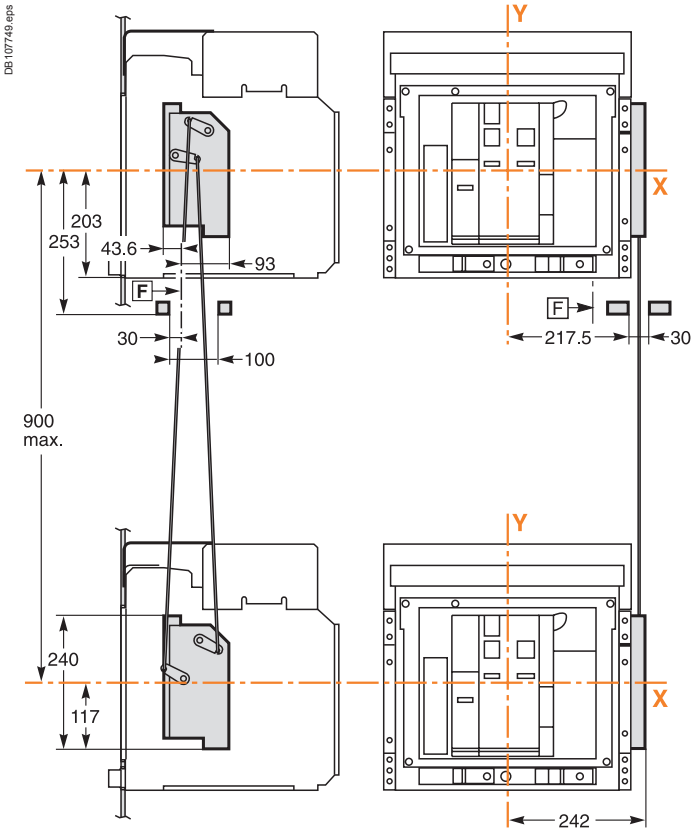

Compact NS and Masterpact NT/NW source-changeover systems

Interlocking using cables

Two Compact NS630b to NS1600 devices side-by-side

Fixed devices

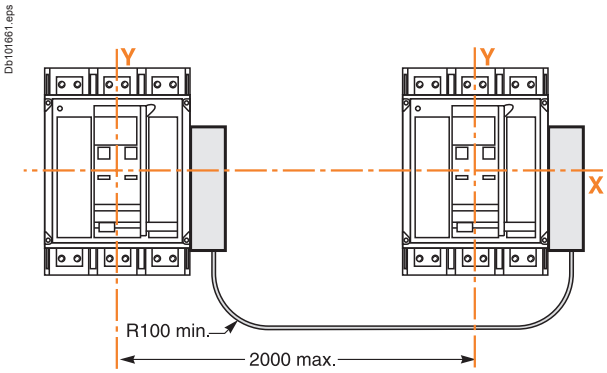

Withdrawable devices

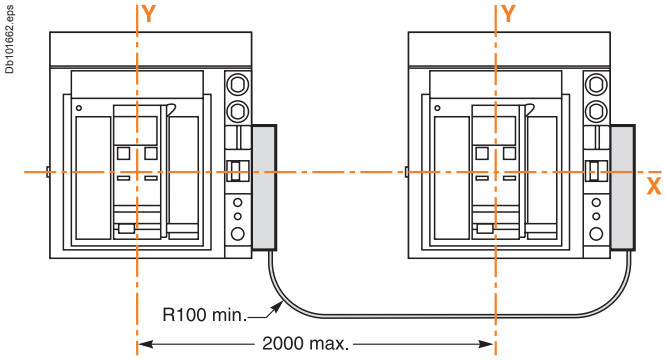

Two Masterpact NT devices side-by-side

Fixed devices

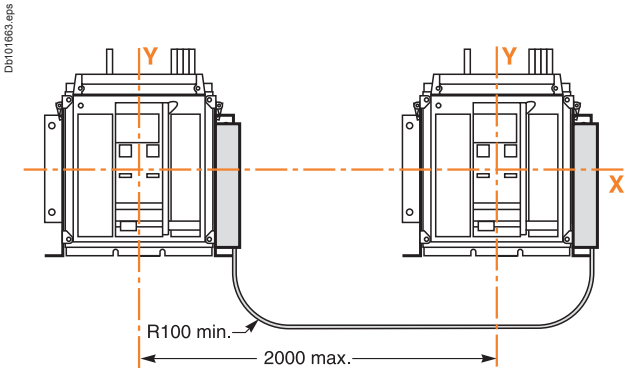

Drawout devices

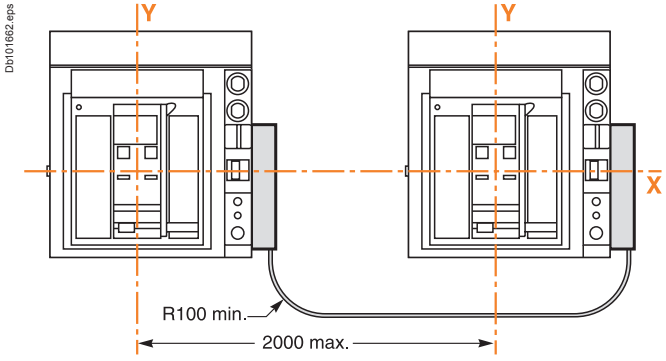

Combination of two Masterpact NT and NW devices side-by-side

Fixed devices

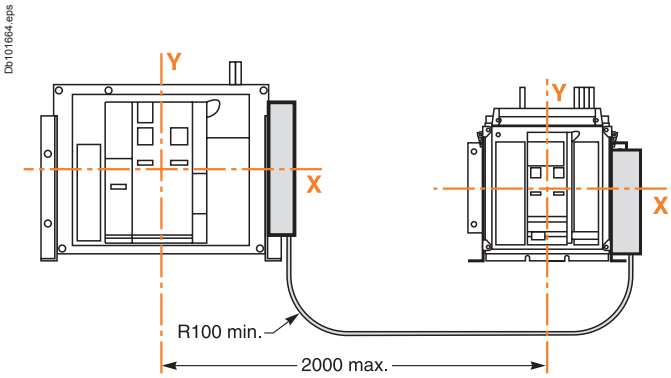

Drawout devices

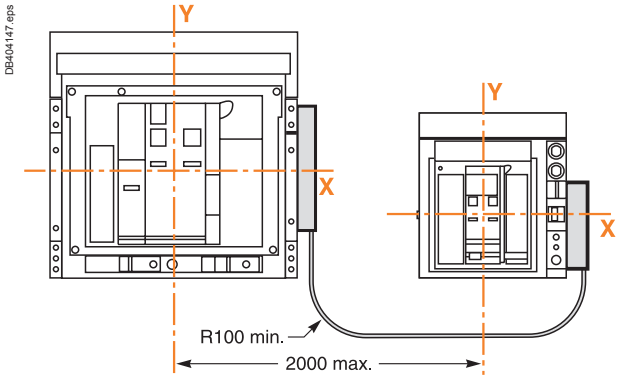

Compact NS and Masterpact NT source-changeover systems

Interlocking using cables

Class CB

Two Compact NS630b to NS1600 devices one above the other

Fixed devices

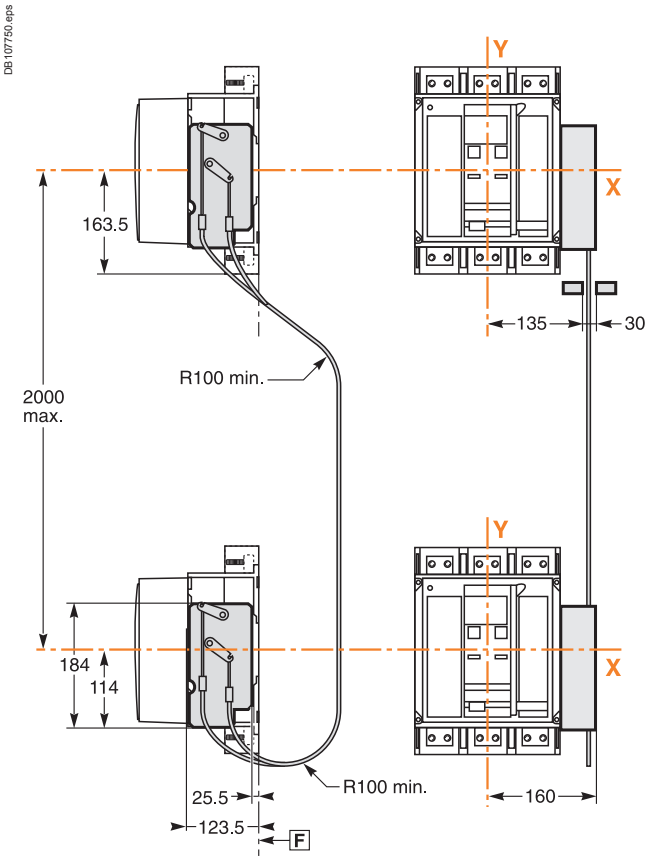

Withdrawable devices

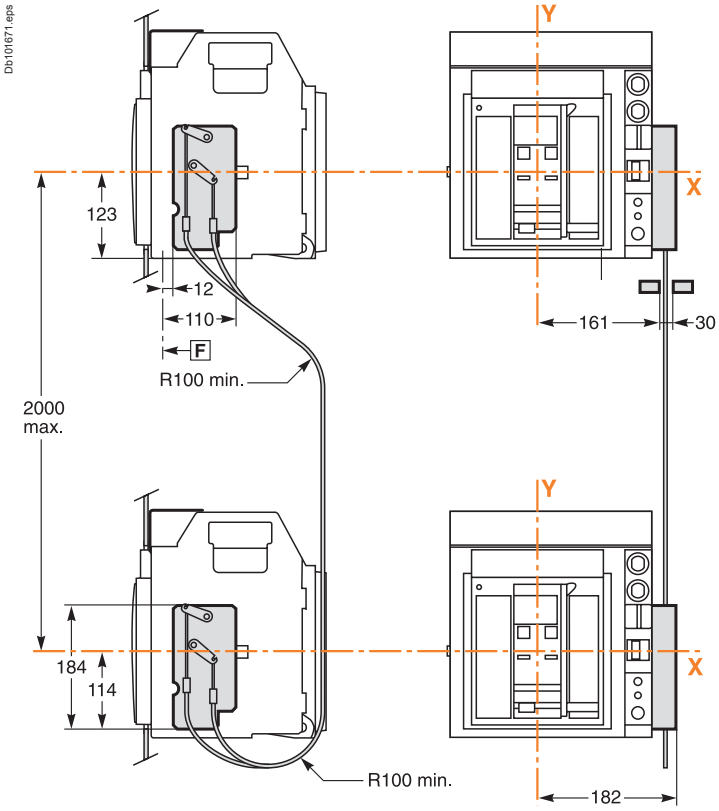

Two Masterpact NT devices one above the other

Fixed devices

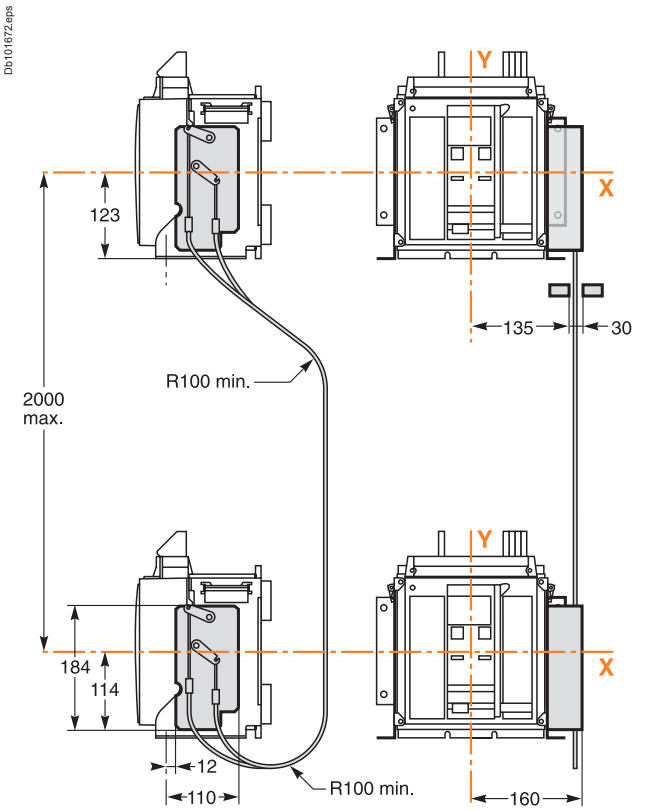

Drawout devices

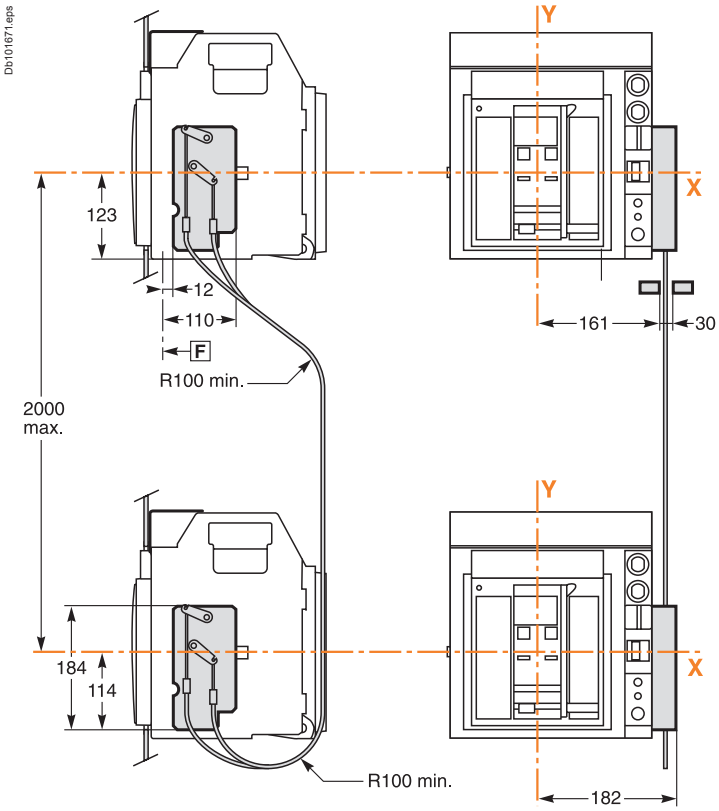

Two Masterpact NW devices one above the other

Fixed devices

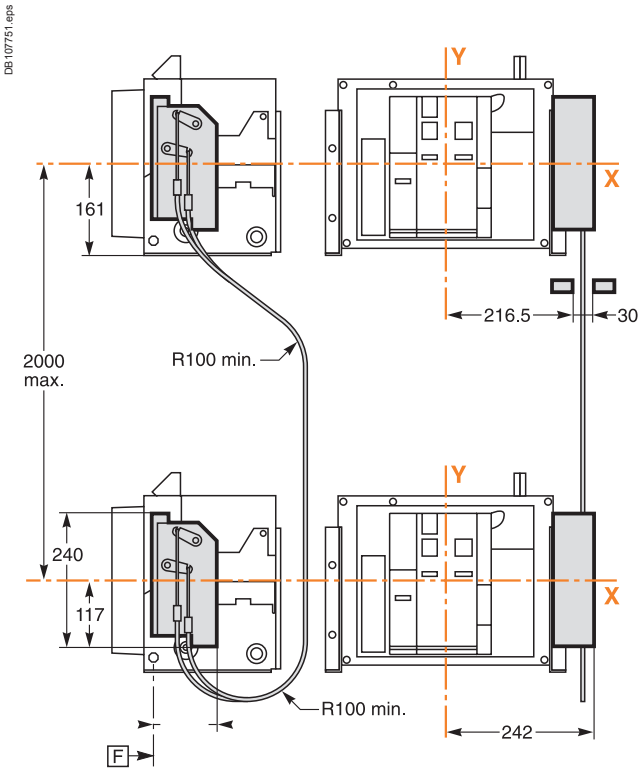

Drawout devices

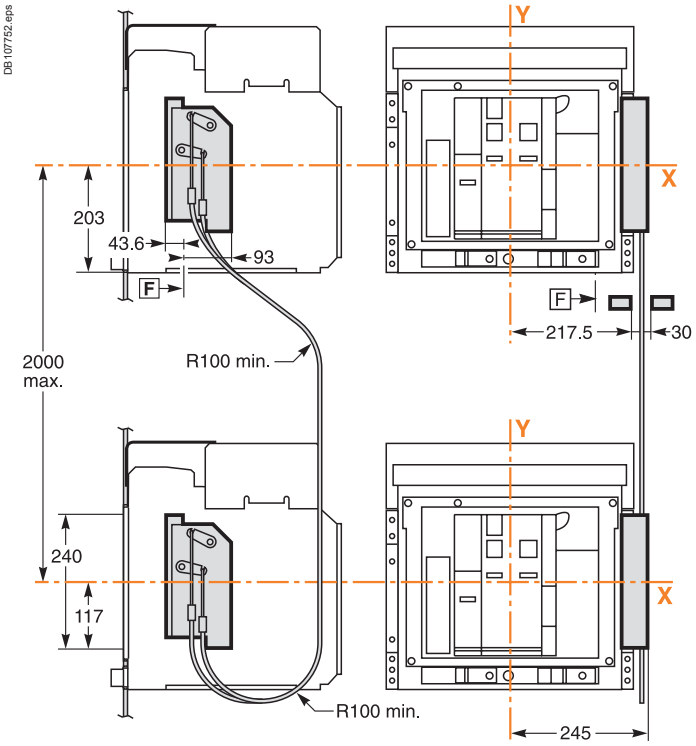

Two Masterpact NT and NW devices one above the other

Fixed devices

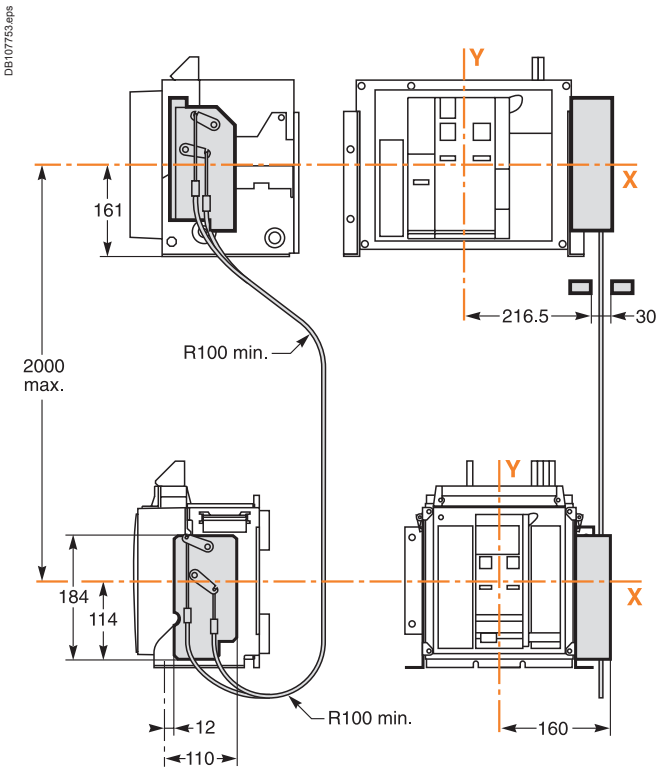

Drawout devices

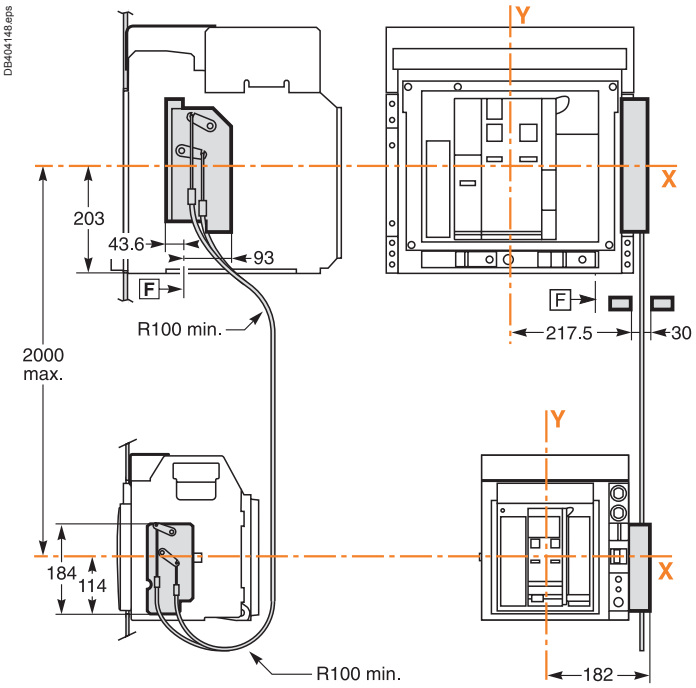

Masterpact NW source-changeover systems

Interlocking using cables

Class CB

Two Masterpact NW devices side-by-side

Fixed devices

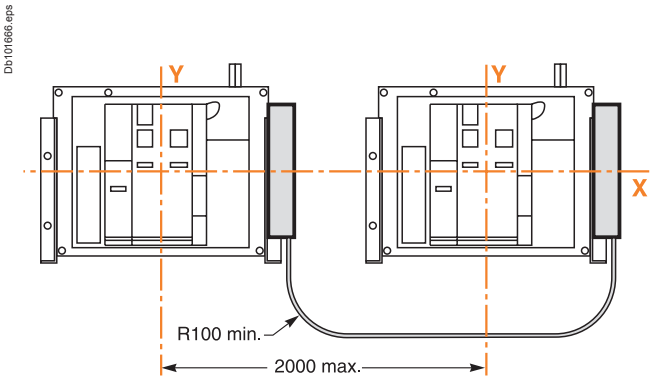

Drawout devices

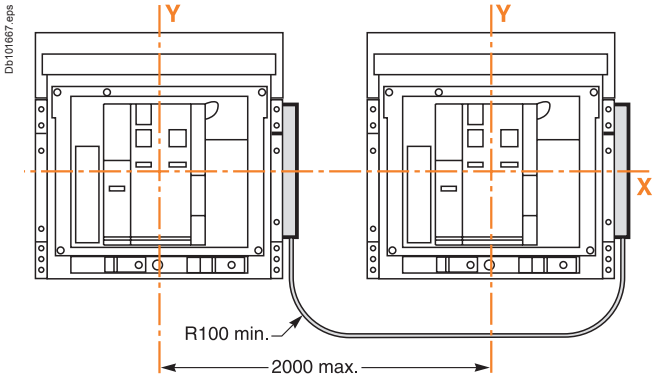

Three Masterpact NW devices side-by-side

Fixed devices

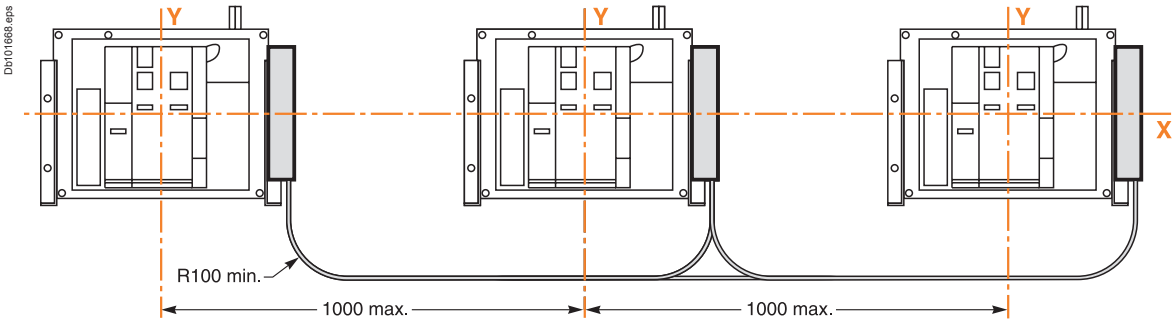

Drawout devices

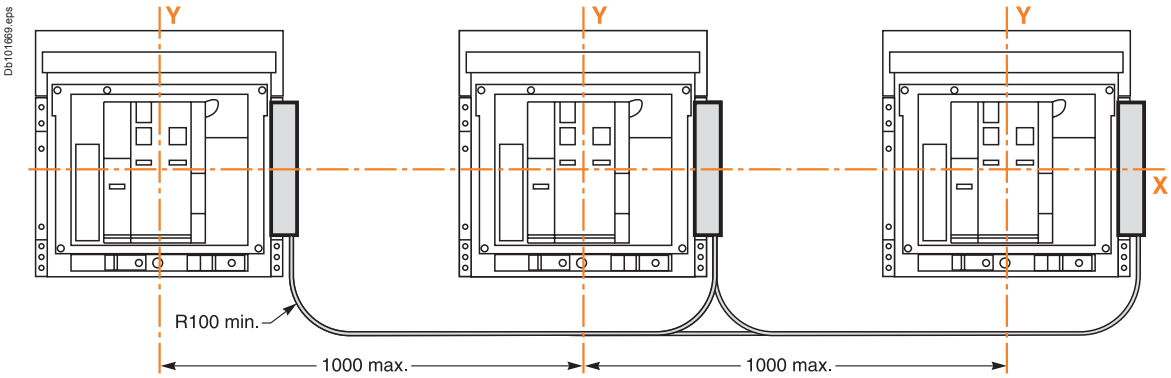

Class CB

Three Masterpact NW devices one above the other

Fixed devices

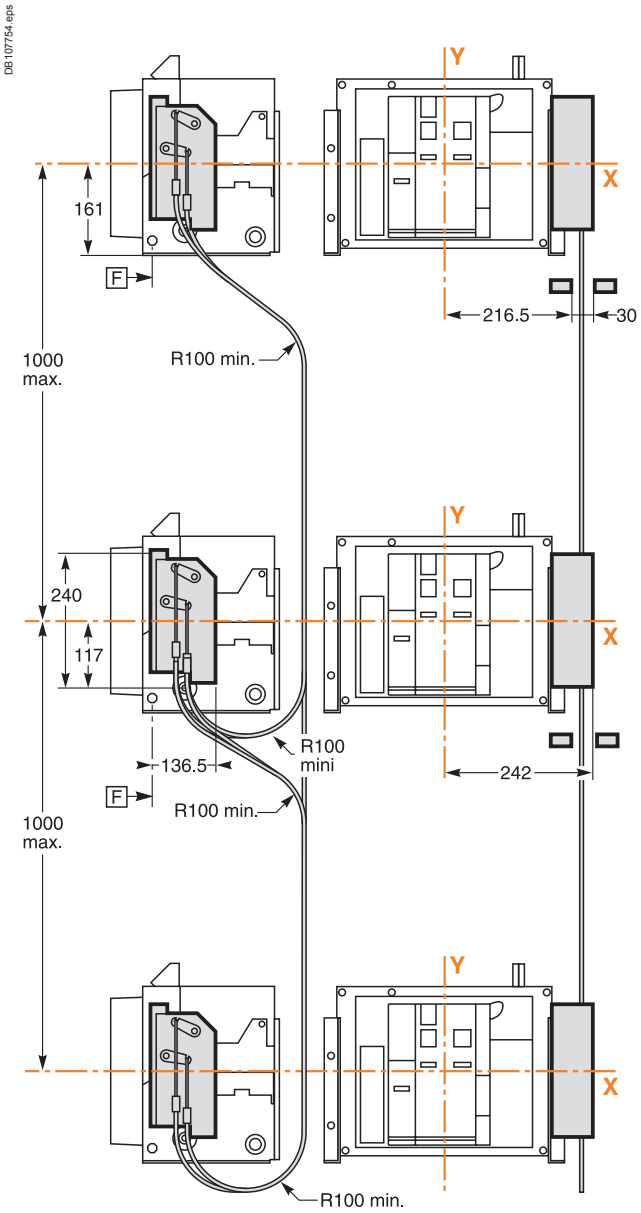

Drawout devices

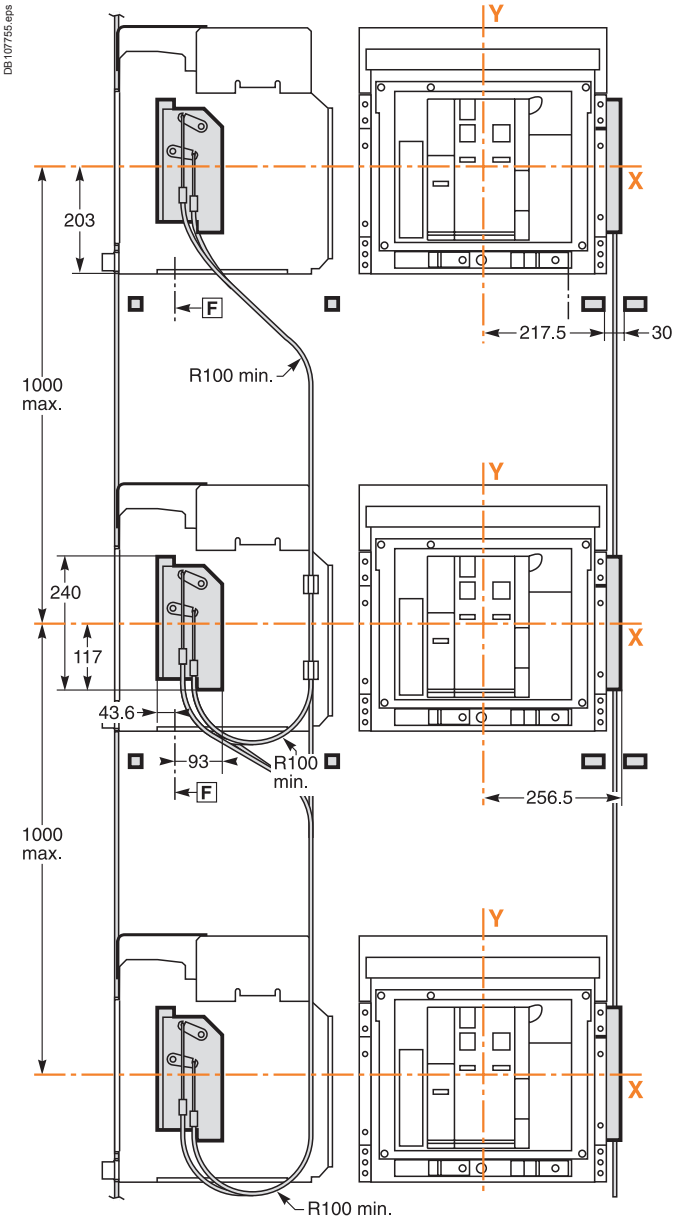

Source-changeover systems
IVE unit, UA/BA automatic controllers

IVE unit

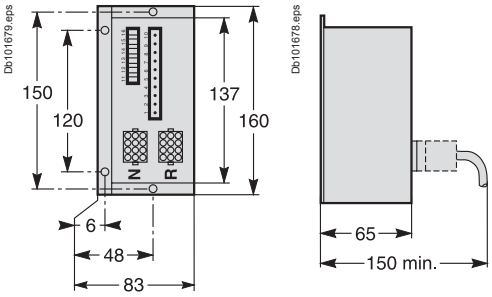

UA/BA automatic controllers

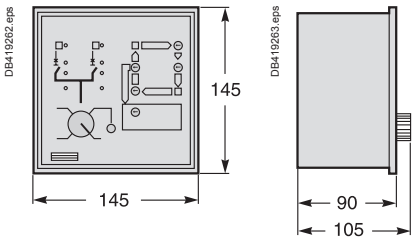

ACP control plate and UA/BA controllers

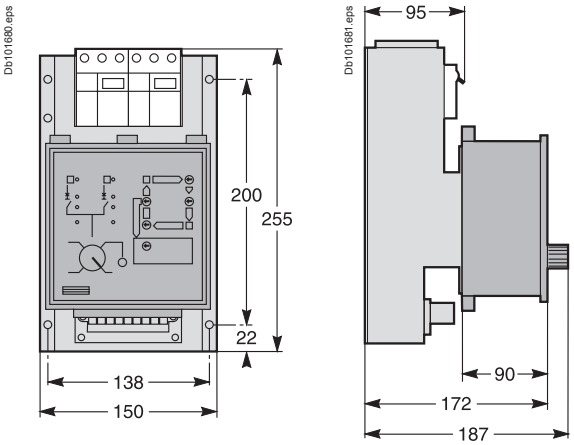

Door cutout for UA/BA controllers

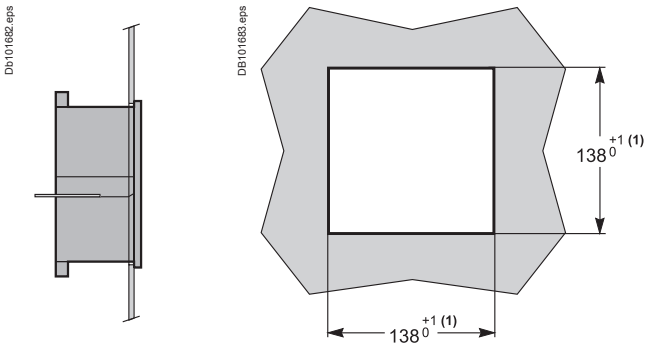

(1) Cutout according DIN 43700 standard.

Electrical diagrams

Presentation 2
Functions and characteristics A-1
Dimensions B-1

Standard configurations **C-2**

Remote-operated source-changeover systems
2 Compact NSX100/630, NS630b/1600 or Masterpact NT/NW devices C-4
2 Compact NSX100/630 devices C-5
2 Compact NS630b/1600 devices C-8
2 Masterpact NT or NW devices C-11

Source-changeover systems with automatic controllers UA
2 Compact NSX100/630, NS630b/1600 or Masterpact NT/NW devices C-16
Controller settings C-17

Source-changeover systems with automatic controllers BA
2 Compact NSX100/630, NS630b/1600 or Masterpact NT/NW devices C-18

Remote-operated source-changeover systems
3 Masterpact NW devices C-19

Catalogue numbers and order forms D-1

Standard configurations

Compact NS, Masterpact NT and NW

Types of mechanical interlocking	Possible combinations	Typical electrical diagrams	Diagram no.	Page
2 devices				
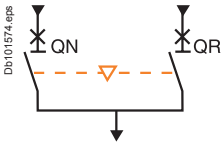	**QN** **QR** 0 0 1 0 0 1	**Compact NSX100 to 630:**		
		■ electrical interlocking without emergency power off (EPO) auxiliaries:	**51201177**	C-5
		□ with EPO by MN	**51201178**	C-6
		□ with EPO by MX	**51201179**	C-7
		Compact NS630b to 1600:		
		■ electrical interlocking with lockout after fault:		
		□ permanent replacement source (with IVE)	**51201183**	C-8
		□ with EPO by MX (with IVE)	**51201184**	C-9
		□ with EPO by MN (with IVE)	**51201185**	C-10
		Masterpact NT and NW:		
		■ electrical interlocking with lockout after fault:		
		□ permanent replacement source (with IVE)	**51201142**	C-11
		□ with EPO by MX (with IVE)	**51201143**	C-12
		□ with EPO by MN (with IVE)	**51201144**	C-13
		■ automatic control with lockout after fault:		
		□ permanent replacement source (with IVE)	**51156904**	C-14
		□ engine generator set (with IVE)	**51156905**	C-15

Masterpact NW only

Types of mechanical interlocking	Possible combinations	Typical electrical diagrams	Diagram no.	Page
3 devices: 2 "Normal" sources and 1 "Replacement" source				
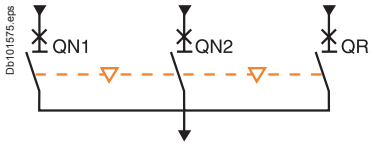	**QN1 QN2 QR** 0 0 0 1 1 0 0 0 1	■ electrical interlocking: □ without lockout after fault □ with lockout after fault	 **51156906** **51156907**	 C-19 C-20
3 devices: 2 "Normal" sources and 1 "Replacement" source with source selection				
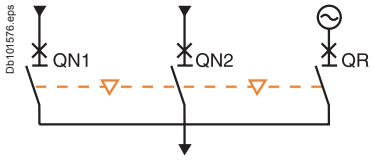	**QN1 QN2 QR** 0 0 0 1 0 0 0 0 1 1 1 0 0 1 0	■ automatic control with engine generator set: □ without lockout after fault (with MN) □ with lockout after fault (with MN)	 **51156908** **51156909**	 C-21 C-22
3 devices: 3 sources, only one device				
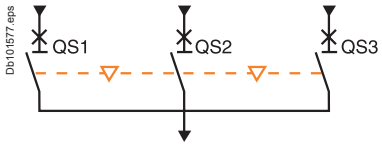	**QS1 QS2 QS3** 0 0 0 1 0 0 0 1 0 0 0 1	■ electrical interlocking: □ without lockout after fault □ with lockout after fault	 **51156910** **51156911**	 C-23 C-24
3 devices: 2 sources + 1 coupling				
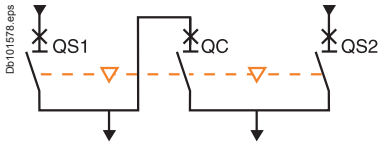	**QS1 QC QS2** 0 0 0 1 0 1 1 1 0 0 1 1 1 0 0 (1) 0 0 1 (1) *(1) possible by forcing operation*	■ electrical interlocking: □ without lockout after fault □ with lockout after fault ■ automatic control with lockout after fault	 **51156912** **51156913** **51156914**	 C-25 C-26 C-27

"Lockout after fault" option. This option makes it necessary to manually reset the device following fault tripping.

Remote-operated source-changeover systems

2 Compact NSX100/630, NS630b/1600 or Masterpact NT/NW devices

Electrical interlocking by the IVE unit

Independent order to Normal/Replacement source

DB415112.eps

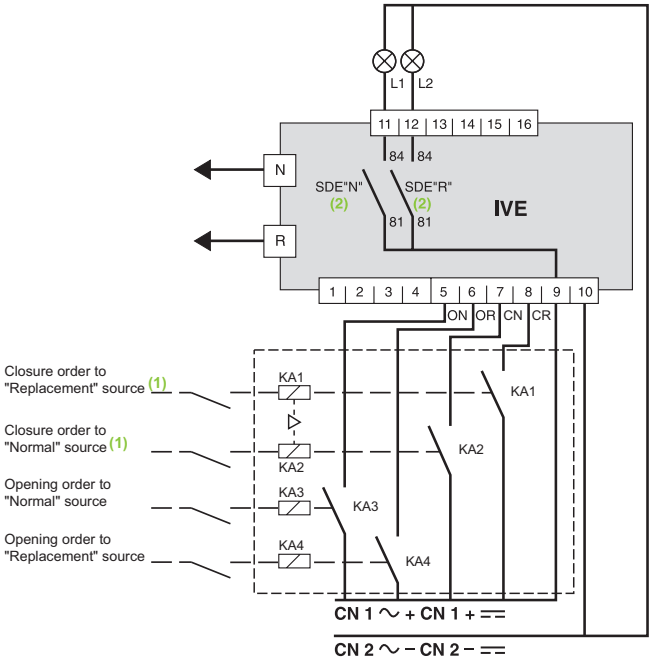

Controlling each circuit breaker independently.

Simultaneous order to Normal/Replacement source

DB415113.eps

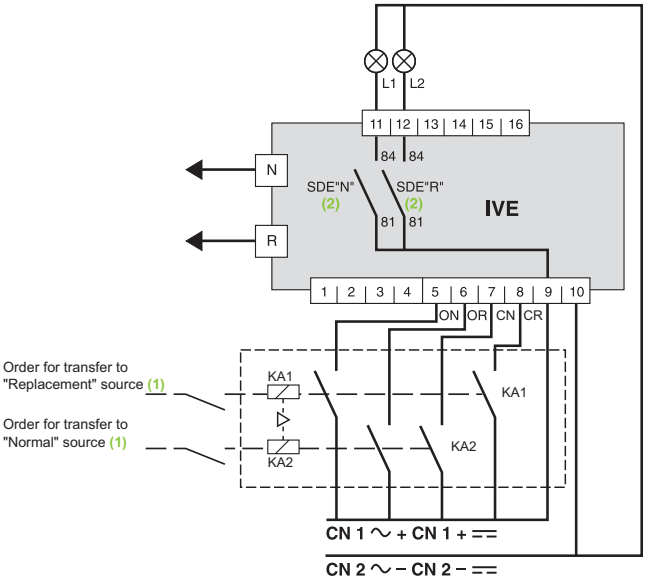

Control of two circuit breakers by "common" transfer order.

(1) See section "IMPORTANT" here after.
(2) Operating diagram: the SDE "fault-trip" signals are transmitted to the IVE unit. The SDE auxiliary contacts are mounted in the circuit breakers.

IMPORTANT

The relays controlling the closing order to the "Normal" and "Replacement" circuit breakers must be mechanically and/or electrically interlocked to prevent them from giving simultaneous closing commands.

It is recommended to use Tesys K relays from Schneider Electric reference LC2-K06010●●. These relays are mechanically and electrically interlocked.

Legends

ON *"Normal" source opening order*
OR *"Replacement" source opening order*
CN *"Normal" source closing order*
CR *"Replacement" source closing order*
KA1 *auxiliary relay*
KA2 *auxiliary relay*
KA3 *auxiliary relay*
KA4 *auxiliary relay*
L1 *"Normal" source "fault-trip" signal*
L2 *"Replacement" source "fault-trip" signal*
N *"Normal" source auxiliary wiring connector*
R *"Replacement" source auxiliary wiring connector*

Note: diagram shown with circuits de-energised, circuit breakers open and relays in normal position.

Remote-operated source-changeover systems

2 Compact NSX100/630 devices

Diagram no. 51201177

Source-changeover system without automatic-control system

Without auxiliaries for emergency off

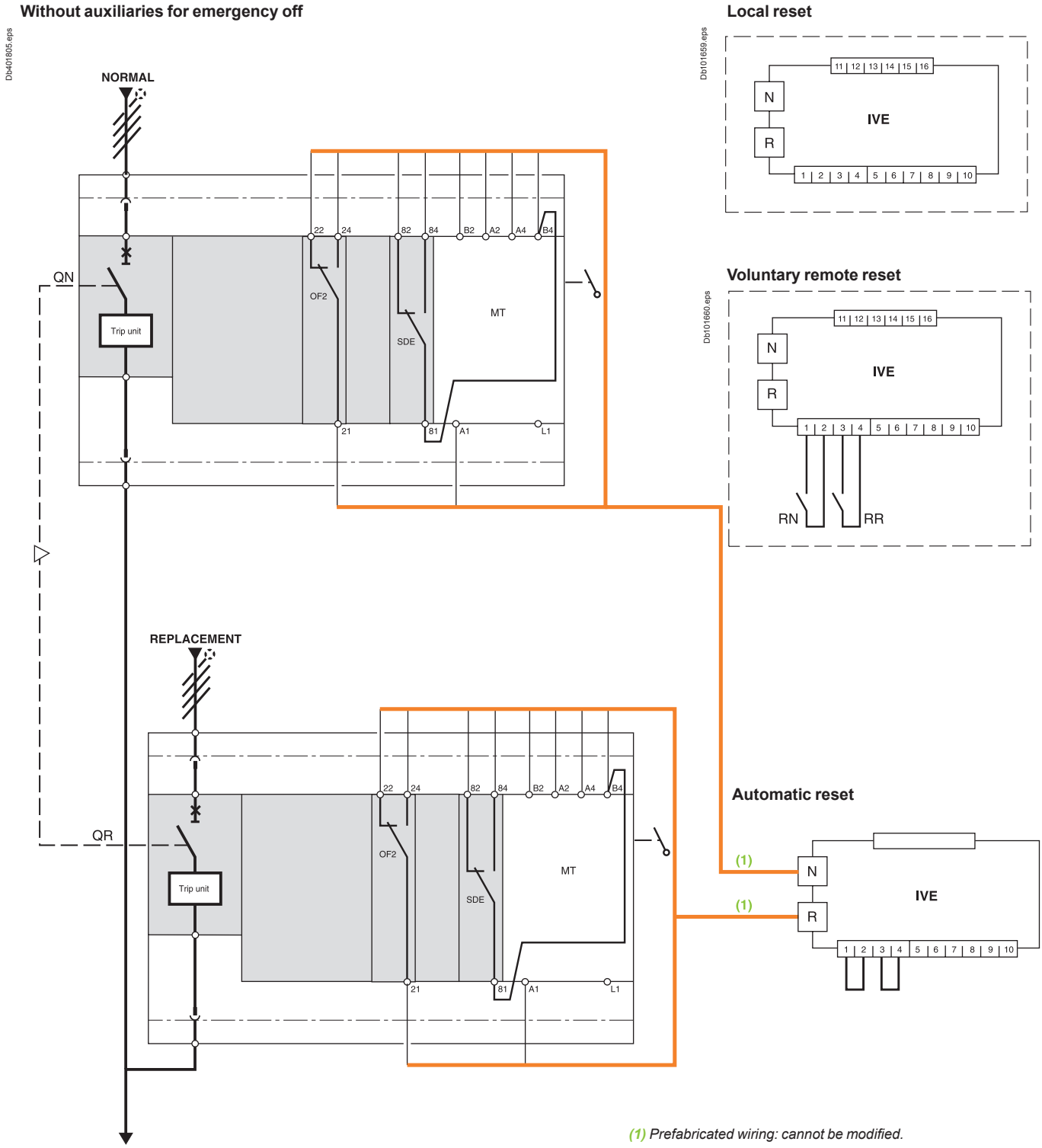

(1) Prefabricated wiring: cannot be modified.

Legends

QN *"Normal" source Compact NSX equipped with motor mechanism*
QR *"Replacement" source Compact NSX equipped with motor mechanism*
SDE *"fault-trip" indication contact*
IVE *electrical interlocking and terminal block unit*
MT *motor mechanism*
OF2 *breaker ON/OFF indication contact*
RN *reset order for breaker QN*
RR *reset order for breaker QR*

States permitted by mechanical interlocking system

Normal	Replacement
0	0
1	0
0	1

Note: diagram shown with circuits de-energised, circuit breakers open and relays in normal position.

Remote-operated source-changeover systems

2 Compact NSX100/630 devices

Diagram no. 51201178

Source-changeover system without automatic-control system

With emergency off by MN release and automatic reset

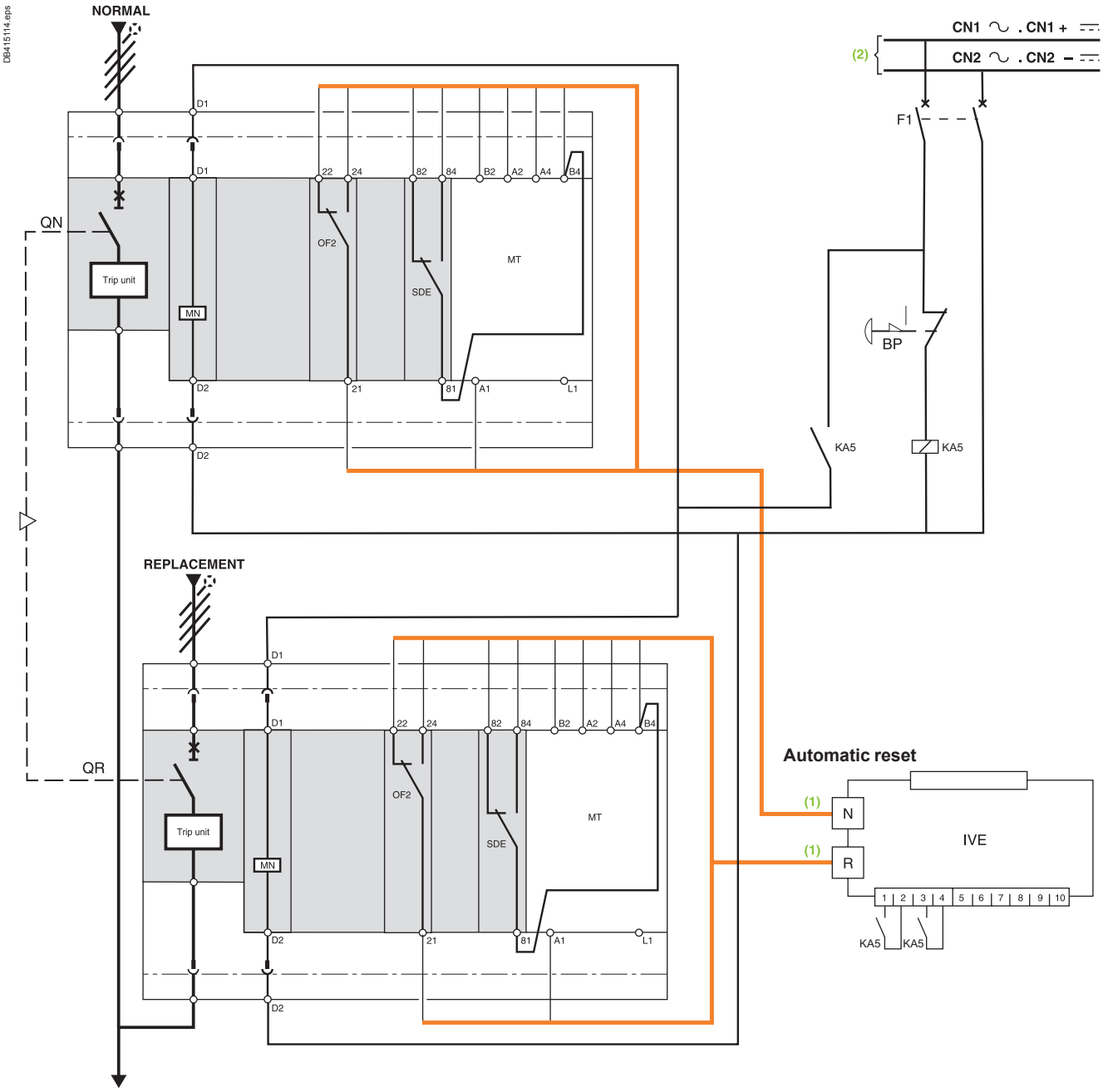

(1) Prefabricated wiring supplied.
(2) Independent auxiliary source.

Legends

- ***QN*** *"Normal" source Compact NSX equipped with motormechanism*
- ***QR*** *"Replacement" source Compact NSX equipped with motor mechanism*
- ***MN*** *undervoltage release*
- ***OF2*** *breaker ON/OFF indication contact*
- ***SDE*** *"fault-trip" indication contact*
- ***MT*** *motor mechanism*
- ***IVE*** *electrical interlocking and terminal block unit*
- ***BP*** *emergency off button with latching*
- ***KA5*** *auxiliary relay*
- ***F1*** *auxiliary power supply circuit breaker*

States permitted by mechanical interlocking system

Normal	Replacement
0	0
1	0
0	1

Note: after a fault trip, the breaker must be reset manually by pressing its reset button.
Diagram shown with circuits de-energised, circuit breakers open and relays in normal position.

Schneider Electric

Remote-operated source-changeover systems

2 Compact NSX100/630 devices

Diagram no. 51201179

Source-changeover system without automatic-control system

With emergency off by MX release and automatic reset

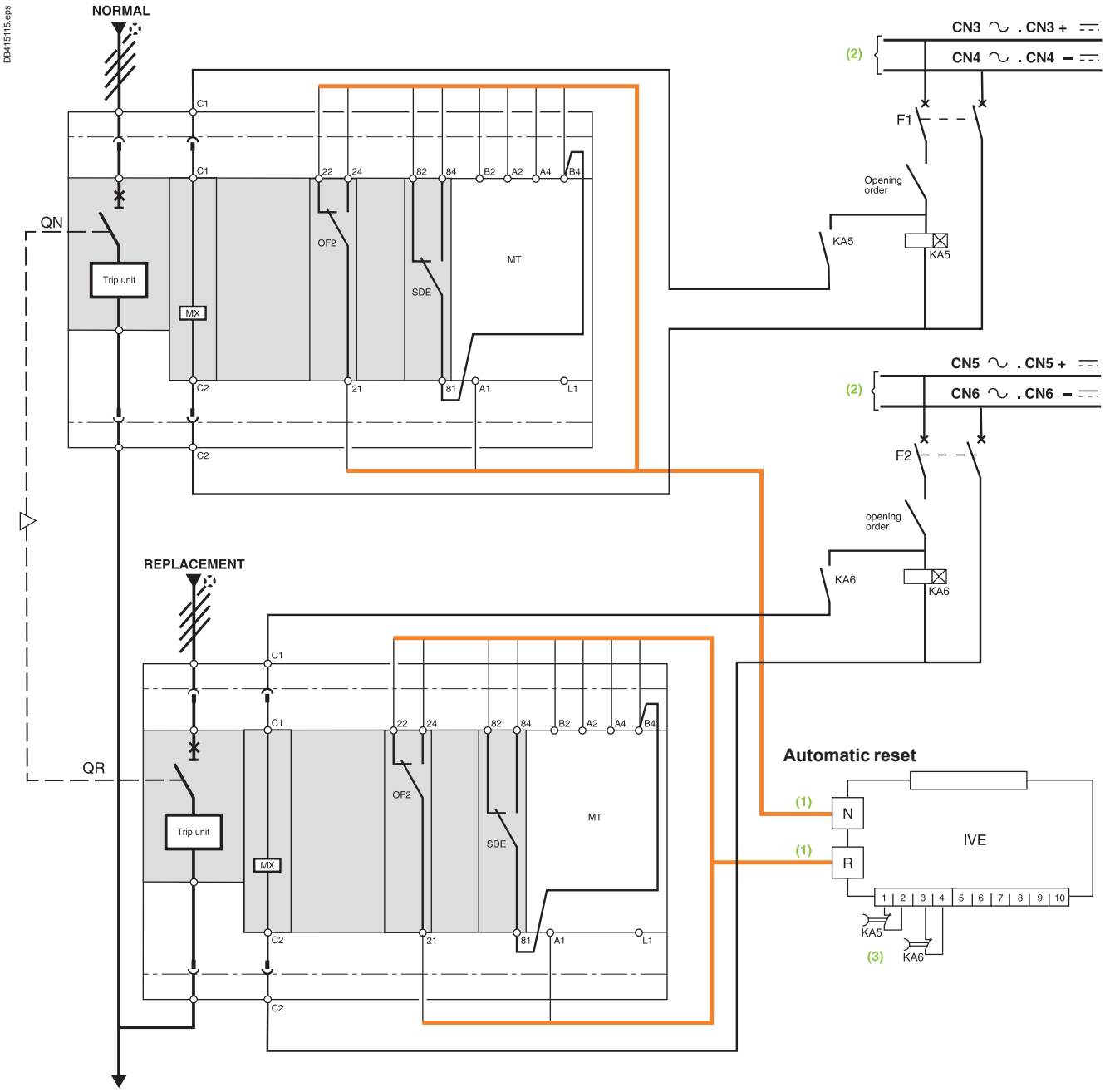

(1) Prefabricated wiring supplied
(2) This source can be:
- *the source present in the case of voltage monitoring*
- *an independent source.*
  In this case, the MX release must be protected.

(3) The reset orders must be delayed by 0.3 seconds.

Legends

QN	*"Normal" source Compact NSX equipped with motor mechanism*
QR	*"Replacement" source Compact NSX equipped with motor mechanism*
SDE	*"fault-trip" indication contact*
OF2	*breaker ON/OFF indication contact*
MX	*shunt release*
MT	*motor mechanism*
IVE	*electrical interlocking and terminal block unit*
KA5	*time-delayed auxiliary relays*
KA6	*time-delayed auxiliary relays*
F1	*auxiliary power supply circuit breaker*
F2	*auxiliary power supply circuit breaker*

States permitted by mechanical interlocking system

Normal	Replacement
0	0
1	0
0	1

Note: after a fault trip, the breaker must be reset manually by pressing its reset button.
Diagram shown with circuits de-energised, circuit breakers open and relays in normal position.

Remote-operated source-changeover systems

2 Compact NS630b/1600 devices

Diagram no. 51201183

Electrical interlocking by IVE unit

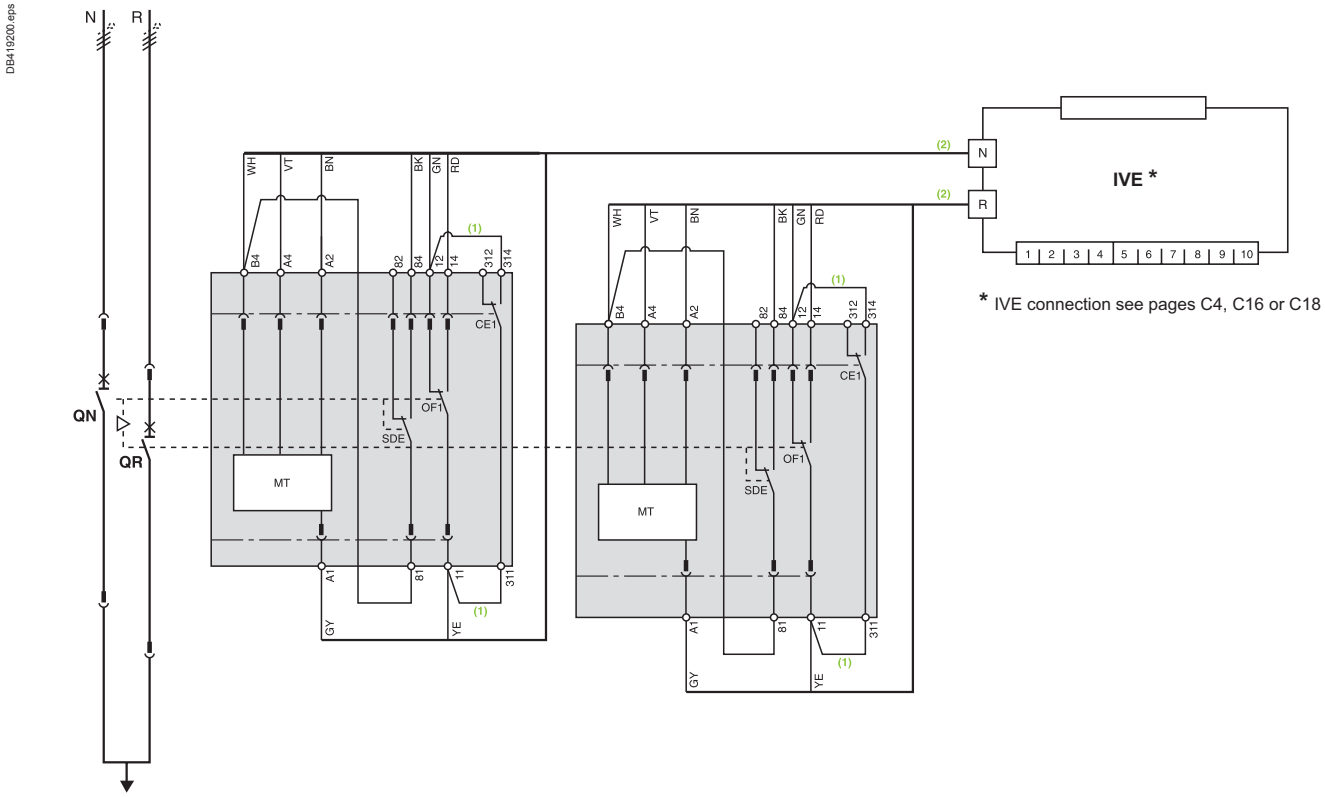

* IVE connection see pages C4, C16 or C18

ATTENTION

The diagram shows the electrical wiring for circuit breakers. When wiring the SDE with **switch-disconnectors, connect wire BK to terminal 82.**

(1) Not to be wired on fixed version.
(2) Prefabricated wiring supplied.

Legends

QN	*"Normal" source Compact NS630b to 1600*
QR	*"Replacement" source Compact NS630b to 1600*
OF...	*breaker ON/OFF indication contact*
SDE	*"fault-trip" indication contact*
CE1	*"connected-position" indication contact (carriage switch)*
F1	*auxiliary power supply circuit breaker*
IVE	*electrical interlocking and terminal block unit*
ON	*"Normal" source opening order*
OR	*"Replacement" source opening order*
CN	*"Normal" source closing order (0.25 second delay)*
CR	*"Replacement" source closing order (0.25 second delay)*
MT	*Motor Mechanism*

Wiring colour codes

RD	GN	BK	VT	YE	GY	WH	BN
red	green	black	violet	yellow	grey	white	brown

States permitted by mechanical interlocking system

Normal	Replacement
0	0
1	0
0	1

Note: after a fault trip, the breaker must be reset manually by pressing its reset button.
Diagram shown with circuit breakers in connected position, open, charged, and ready to close.
Auxiliary power supply = supply voltage of auxiliary relays (KA...) = supply voltage of electrical auxiliaries (electrical operation, MT...).

Schneider Electric

Remote-operated source-changeover systems

2 Compact NS630b/1600 devices

Diagram no. 51201184

Electrical interlocking by IVE unit with emergency off by shunt release

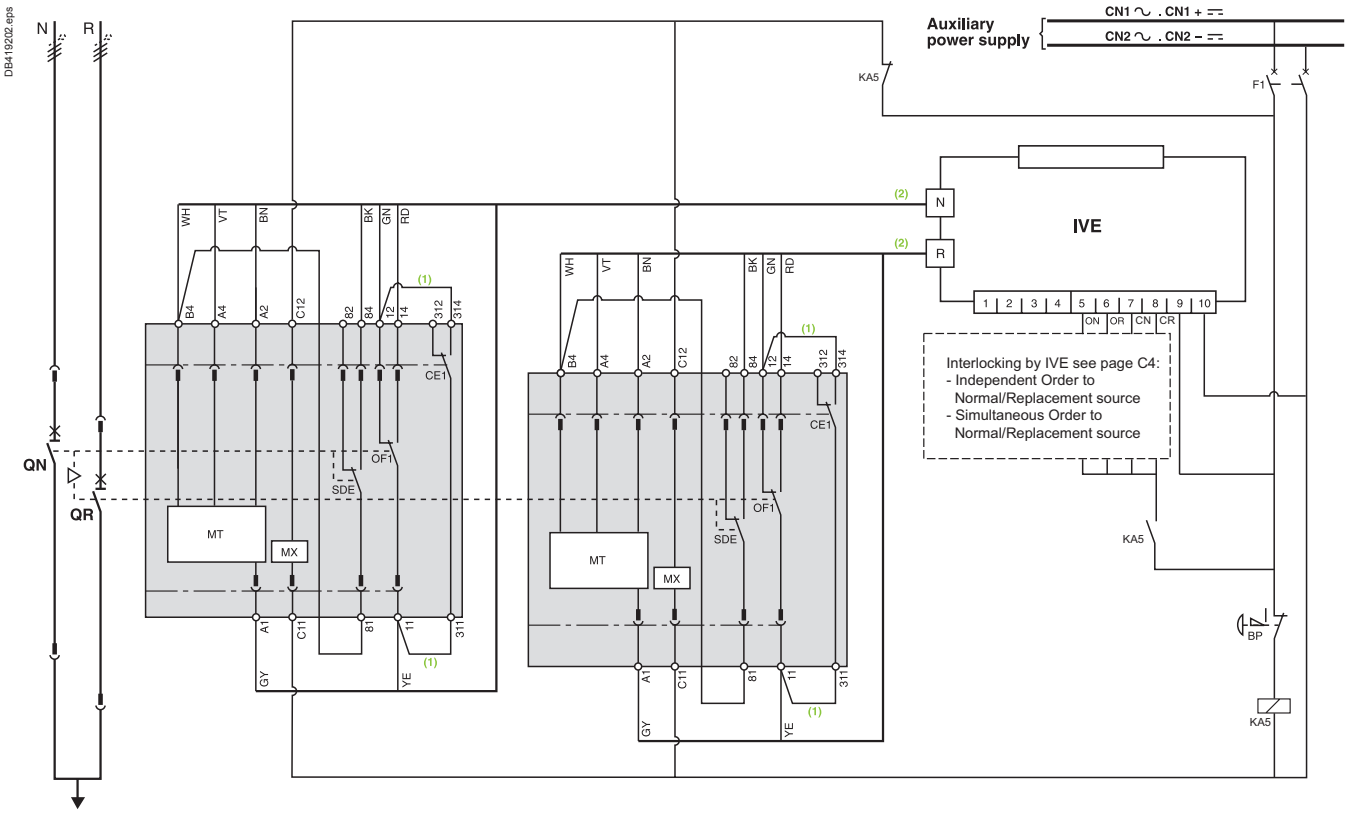

ATTENTION
The diagram shows the electrical wiring for circuit breakers. When wiring the SDE with **switch-disconnectors, connect wire BK to terminal 82.**

(1) Not to be wired on fixed version.
(2) Prefabricated wiring supplied.

Legends

QN	*"Normal" source Compact NS630b to 1600*
QR	*"Replacement" source Compact NS630b to 1600*
OF...	*breaker ON/OFF indication contact*
SDE	*"fault-trip" indication contact*
CE1	*"connected-position" indication contact (carriage switch)*
F1	*auxiliary power supply circuit breaker*
IVE	*electrical interlocking and terminal block unit*
MX	*shunt release*
BP	*emergency off button with latching*
KA5	*auxiliary relay*
ON	*"Normal" source opening order*
OR	*"Replacement" source opening order*
CN	*"Normal" source closing order (0.25 second delay)*
CR	*"Replacement" source closing order (0.25 second delay)*
MT	*Motor Mechanism*

Wiring colour codes

RD	GN	BK	VT	YE	GY	WH	BN
red	green	black	violet	yellow	grey	white	brown

States permitted by mechanical interlocking system

Normal	Replacement
0	0
1	0
0	1

Note: after a fault trip, the breaker must be reset manually by pressing its reset button.
Diagram shown with circuit breakers in connected position, open, charged, and ready to close.
Auxiliary power supply = supply voltage of auxiliary relays (KA...) = supply voltage of electrical auxiliaries (electrical operation, MX, MT...).

Remote-operated source-changeover systems

2 Compact NS630b/1600 devices

Diagram no. 51201185

Electrical interlocking by IVE unit with emergency off by undervoltage release

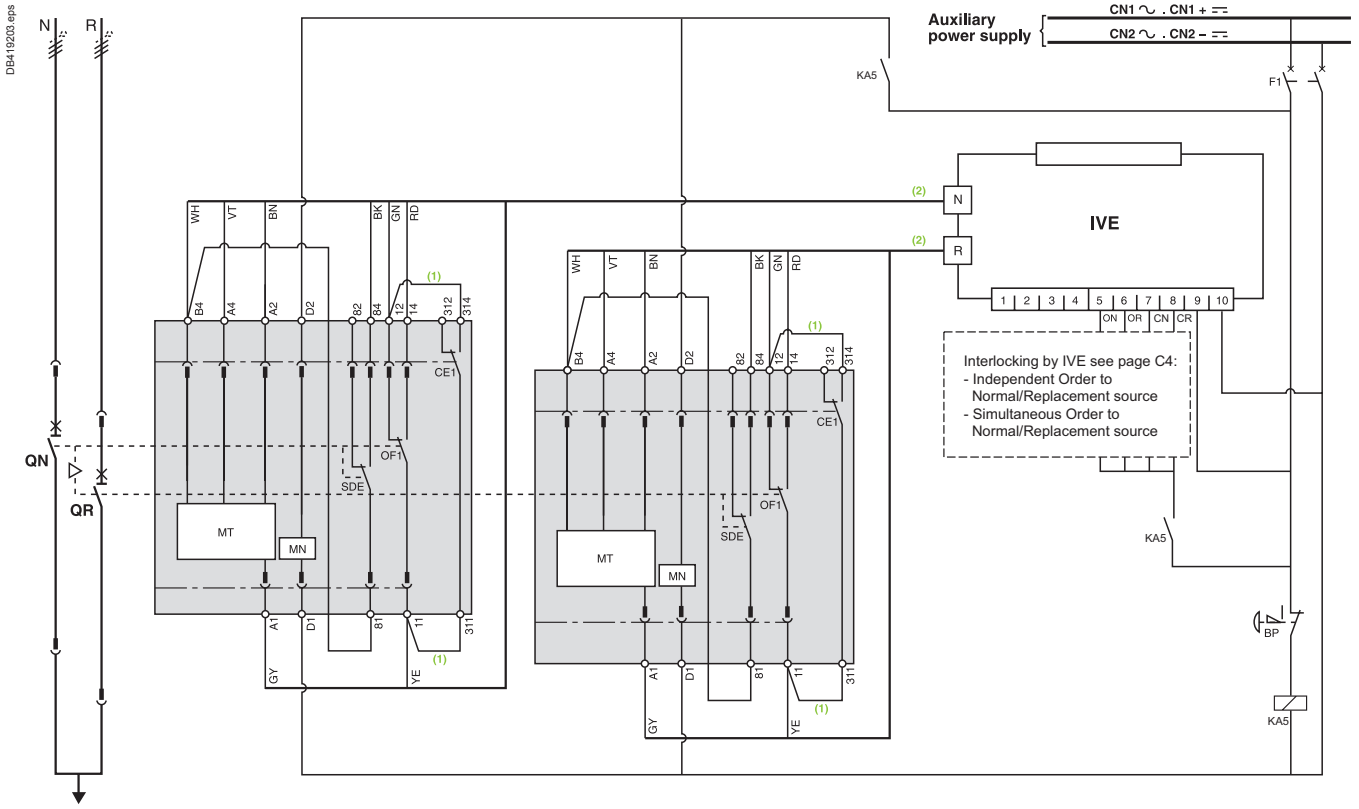

ATTENTION

The diagram shows the electrical wiring for circuit breakers. When wiring the SDE with **switch-disconnectors, connect wire BK to terminal 82.**

(1) Not to be wired on fixed version.
(2) Prefabricated wiring supplied.

Legends

QN	*"Normal" source Compact NS630b to 1600*
QR	*"Replacement" source Compact NS630b to 1600*
OF...	*breaker ON/OFF indication contact*
SDE	*"fault-trip" indication contact*
CE1	*"connected-position" indication contact (carriage switch)*
F1	*auxiliary power supply circuit breaker*
IVE	*electrical interlocking and terminal block unit*
MN	*undervoltage release*
BP	*emergency off button with latching*
KA5	*auxiliary relay*
ON	*"Normal" source opening order*
OR	*"Replacement" source opening order*
CN	*"Normal" source closing order (0.25 second delay)*
CR	*"Replacement" source closing order (0.25 second delay)*
MT	*Motor Mechanism*

Wiring colour codes

RD	GN	BK	VT	YE	GY	WH	BN
red	green	black	violet	yellow	grey	white	brown

States permitted by mechanical interlocking system

Normal	Replacement
0	0
1	0
0	1

Note: after a fault trip, the breaker must be reset manually by pressing its reset button.
Diagram shown with circuit breakers in connected position, open, charged, and ready to close.
Auxiliary power supply = supply voltage of auxiliary relays (KA...) = supply voltage of electrical auxiliaries (electrical operation, MN, MT...).

Remote-operated source-changeover systems

2 Masterpact NT or NW devices

Diagram no. 51201142

Electrical interlocking by IVE unit with lockout after a fault

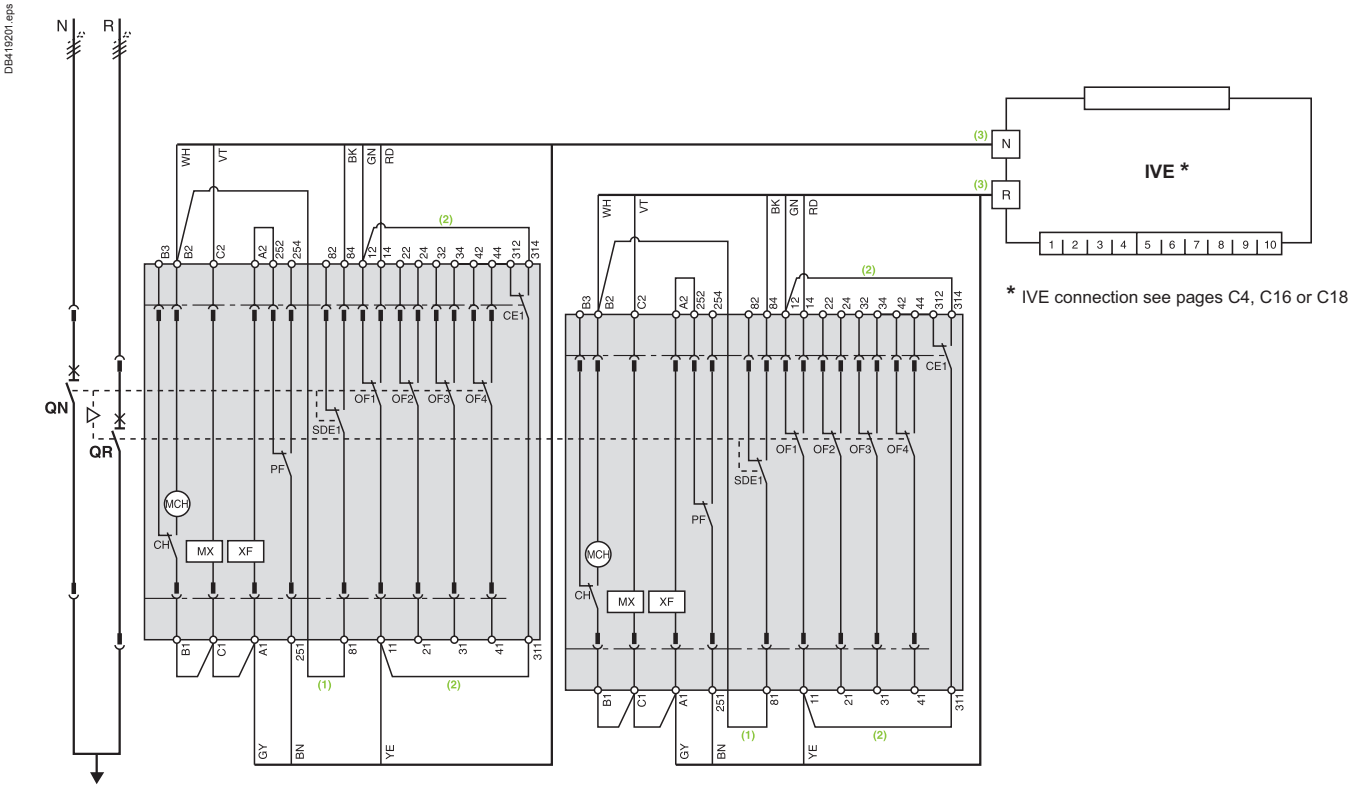

ATTENTION
The diagram shows the electrical wiring for circuit breakers. When wiring the SDE with **switch-disconnectors, connect wire BK to terminal 82.**

(1) Not to be wired for the "without lockout after a fault" solution.
(2) Not to be wired on fixed version.
(3) Prefabricated wiring supplied.

Legends

QN	*"Normal" source Masterpact NT or NW*
QR	*"Replacement" source Masterpact NT or NW*
MCH	*spring-charging motor*
MX	*standard opening voltage release*
XF	*standard closing voltage release*
OF...	*breaker ON/OFF indication contact*
SDE1	*"fault-trip" indication contact*
PF	*"ready-to-close" contact*
CE1	*"connected-position" indication contact (carriage switch)*
CH	*"springs charged" indication contact*
IVE	*electrical interlocking and terminal block unit*
F1	*auxiliary power supply circuit breaker*
ON	*"Normal" source opening order*
OR	*"Replacement" source opening order*
CN	*"Normal" source closing order (0.25 second delay)*
CR	*"Replacement" source closing order (0.25 second delay)*

Wiring colour codes

RD	GN	BK	VT	YE	GY	WH	BN
red	green	black	violet	yellow	grey	white	brown

States permitted by mechanical interlocking system

Normal	Replacement
0	0
1	0
0	1

Note: *diagram shown with circuit breakers in connected position, open, charged, and ready to close.*
Auxiliary power supply = supply voltage of auxiliary relays (KA...) = supply voltage of electrical auxiliaries (electrical operation, MCH, MX, XF...).

Remote-operated source-changeover systems

2 Masterpact NT or NW devices

Diagram no. 51201143

Electrical interlocking by IVE unit with lockout after a fault and emergency off by shunt release

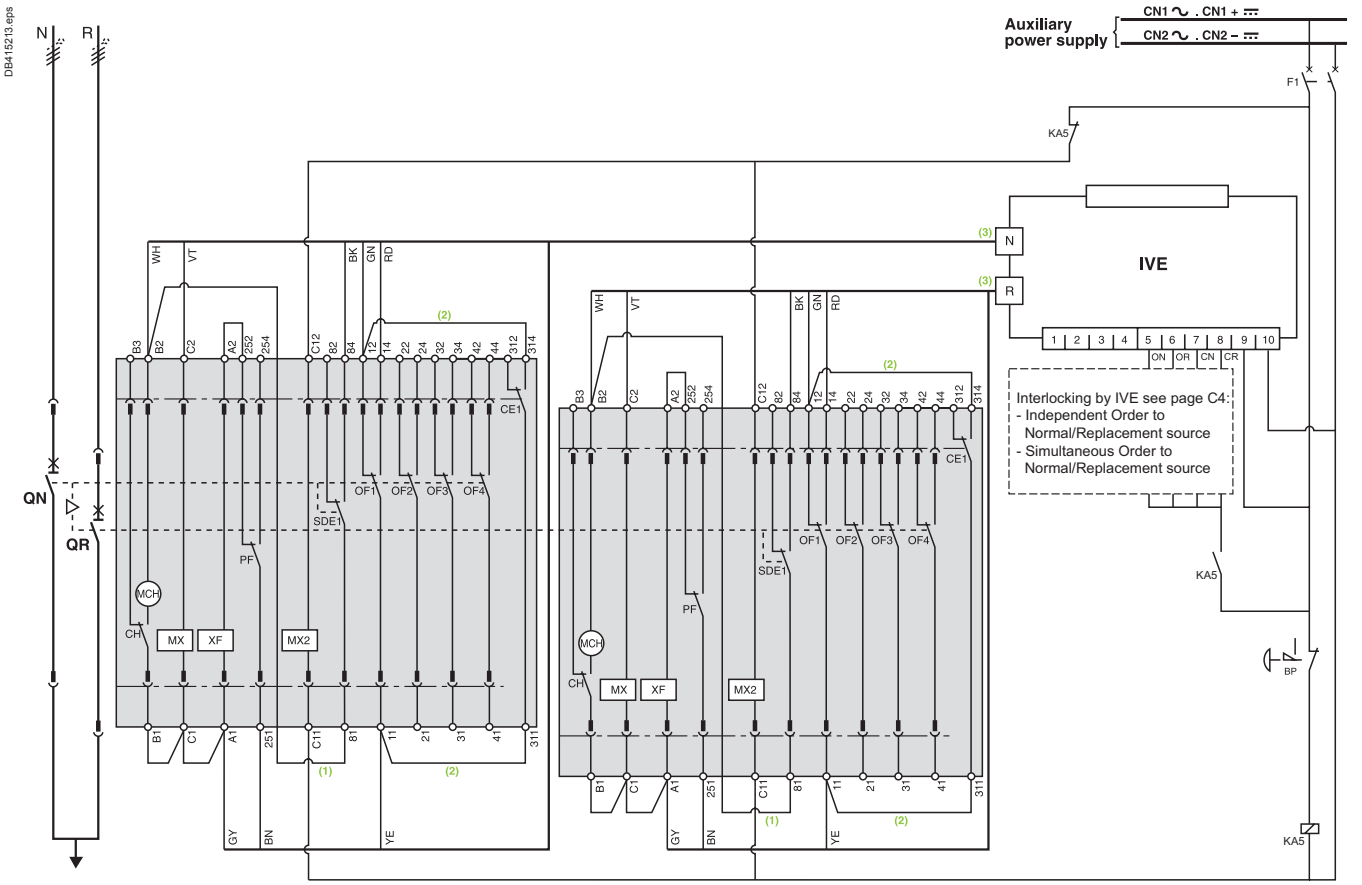

ATTENTION

The diagram shows the electrical wiring for circuit breakers. When wiring the SDE with **switch-disconnectors, connect wire BK to terminal 82.**

(1) Not to be wired for the "without lockout after a fault" solution.
(2) Not to be wired on fixed version.
(3) Prefabricated wiring supplied.

Legends

QN	*"Normal" source Masterpact NT or NW*
QR	*"Replacement" source Masterpact NT or NW*
MCH	*spring-charging motor*
MX	*standard opening voltage release*
XF	*standard closing voltage release*
OF...	*breaker ON/OFF indication contact*
SDE1	*"fault-trip" indication contact*
PF	*"ready-to-close" contact*
CE1	*"connected-position" indication contact (carriage switch)*
CH	*"springs charged" indication contact*
IVE	*electrical interlocking and terminal block unit*
KA5	*auxiliary relay*
F1	*auxiliary power supply circuit breaker*
BP	*emergency off button with latching*
ON	*"Normal" source opening order*
OR	*"Replacement" source opening order*
CN	*"Normal" source closing order (0.25 second delay)*
CR	*"Replacement" source closing order (0.25 second delay)*

Wiring colour codes

RD	GN	BK	VT	YE	GY	WH	BN
red	green	black	violet	yellow	grey	white	brown

States permitted by mechanical interlocking system

Normal	Replacement
0	0
1	0
0	1

Note: diagram shown with circuit breakers in connected position, open, charged, and ready to close.
Auxiliary power supply = supply voltage of auxiliary relays (KA...) = supply voltage of electrical auxiliaries (electrical operation, MCH, MX, XF...).

Remote-operated source-changeover systems

2 Masterpact NT or NW devices

Diagram no. 51201144

Electrical interlocking by IVE unit with lockout after a fault and emergency off by undervoltage release

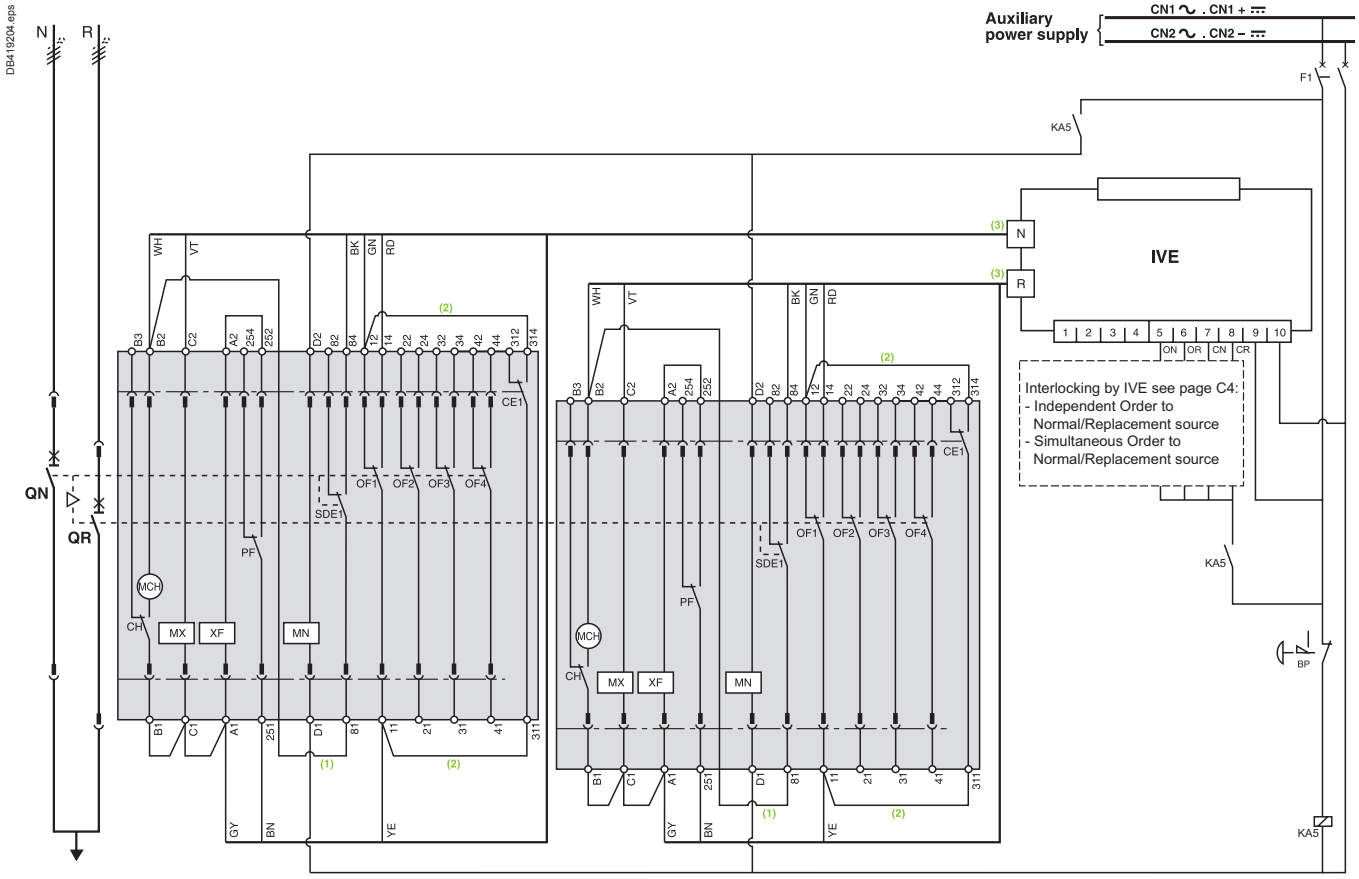

ATTENTION

The diagram shows the electrical wiring for circuit breakers. When wiring the SDE with **switch-disconnectors, connect wire BK to terminal 82.**

(1) Not to be wired for the "without lockout after a fault" solution.
(2) Not to be wired on fixed version.
(3) Prefabricated wiring supplied.

Legends

QN	*"Normal" source Masterpact NT or NW*
QR	*"Replacement" source Masterpact NT or NW*
MCH	*spring-charging motor*
MX	*standard opening voltage release*
XF	*standard closing voltage release*
MN	*undervoltage release*
OF...	*breaker ON/OFF indication contact*
SDE1	*"fault-trip" indication contact*
PF	*"ready-to-close" contact*
CE1	*"connected-position" indication contact (carriage switch)*
CH	*"springs charged" indication contact*
IVE	*electrical interlocking and terminal block unit*
KA5	*auxiliary relay*
F1	*auxiliary power supply circuit breaker*
BP	*emergency off button with latching*
ON	*"Normal" source opening order*
OR	*"Replacement" source opening order*
CN	*"Normal" source closing order (0.25 second delay)*
CR	*"Replacement" source closing order (0.25 second delay)*

Wiring colour codes

RD	GN	BK	VT	YE	GY	WH	BN
red	green	black	violet	yellow	grey	white	brown

States permitted by mechanical interlocking system

Normal	Replacement
0	0
1	0
0	1

Note: diagram shown with circuit breakers in connected position, open, charged, and ready to close.
Auxiliary power supply = supply voltage of auxiliary relays (KA...) = supply voltage of electrical auxiliaries (electrical operation, MCH, MX, MN, XF...).

Remote-operated source-changeover systems

2 Masterpact NT or NW devices

Diagram no. 51156904

Automatic-control system for permanent replacement source with lockout after a fault (with MN)

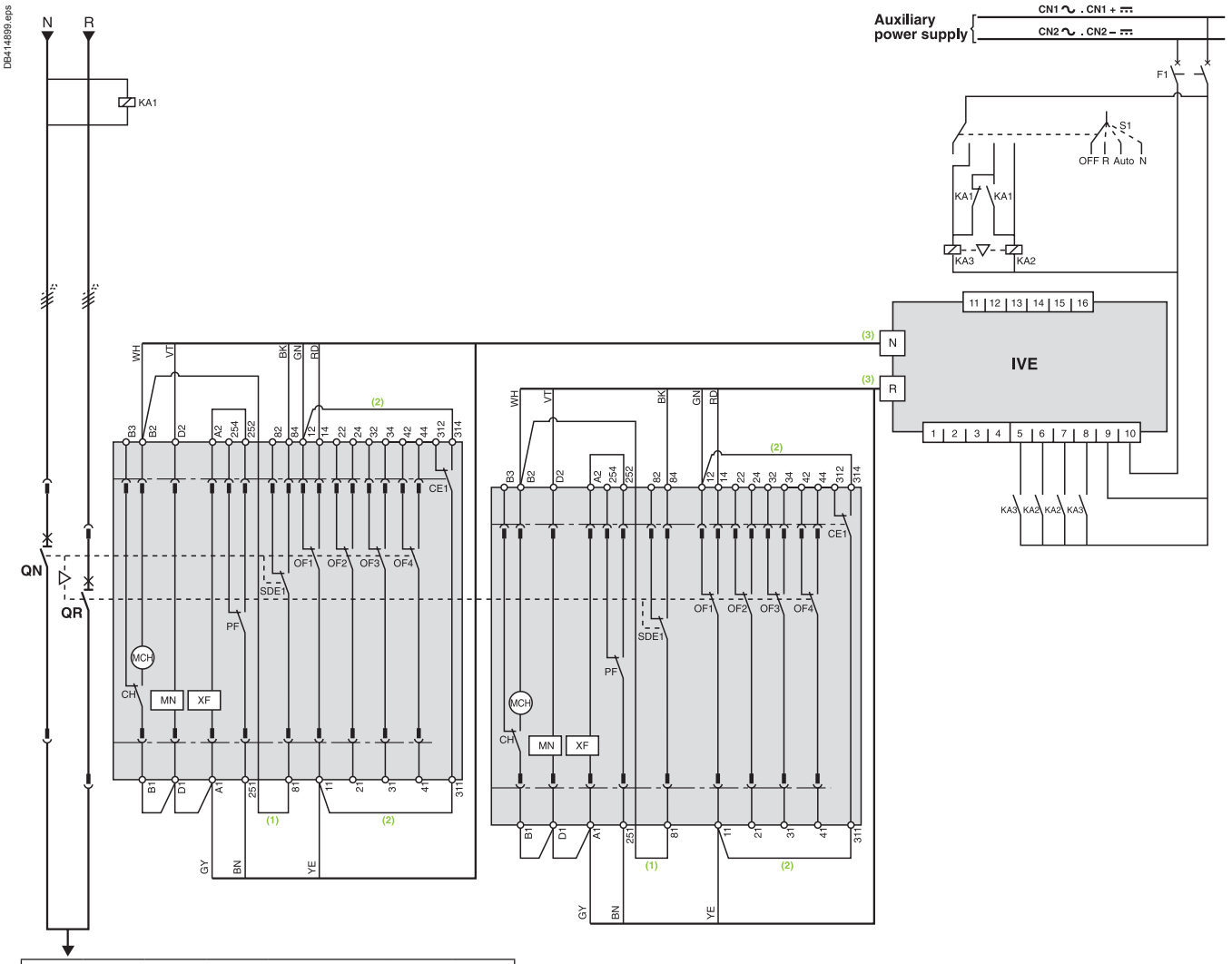

ATTENTION

The diagram shows the electrical wiring for circuit breakers. When wiring the SDE with **switch-disconnectors, connect wire BK to terminal 82.**

(1) Not to be wired for the "without lockout after a fault" solution.
(2) Not to be wired on fixed version.
(3) Prefabricated wiring supplied.

IMPORTANT

The relays controlling the closing order to the "Normal" and "Replacement" circuit breakers must be mechanically and/or electrically interlocked to prevent them from giving simultaneous closing commands.

It is recommended to use Tesys K relays from Schneider Electric reference LC2-K06010●●. These relays are mechanically and electrically interlocked.

Legends

QN	*"Normal" source Masterpact NT or NW*
QR	*"Replacement" source Masterpact NT or NW*
MCH	*spring-charging motor*
XF	*standard closing voltage release*
MN	*undervoltage release*
OF...	*breaker ON/OFF indication contact*
SDE1	*"fault-trip" indication contact*
PF	*"ready-to-close" contact*
CE1	*"connected-position" indication contact (carriage switch)*
CH	*"springs charged" indication contact*
IVE	*electrical interlocking and terminal block unit*
F1	*auxiliary power supply circuit breaker*
F2	*circuit breaker (high breaking capacity)*
S1	*control switches*
KA1	*auxiliary relays*
KA2	*auxiliary relays*
KA3	*auxiliary relays*

Wiring colour codes

RD	GN	BK	VT	YE	GY	WH	BN
red	green	black	violet	yellow	grey	white	brown

States permitted by mechanical interlocking system

Normal	Replacement
0	0
1	0
0	1

Note: diagram shown with circuit breakers in connected position, open, charged, and ready to close.
Auxiliary power supply = supply voltage of auxiliary relays (KA...) = supply voltage of electrical auxiliaries (electrical operation, MCH, MN, XF...).

Schneider Electric

Remote-operated source-changeover systems

2 Masterpact NT or NW devices

Diagram no. 51156905

Automatic-control system for replacement source generator set with lockout after a fault (with MN)

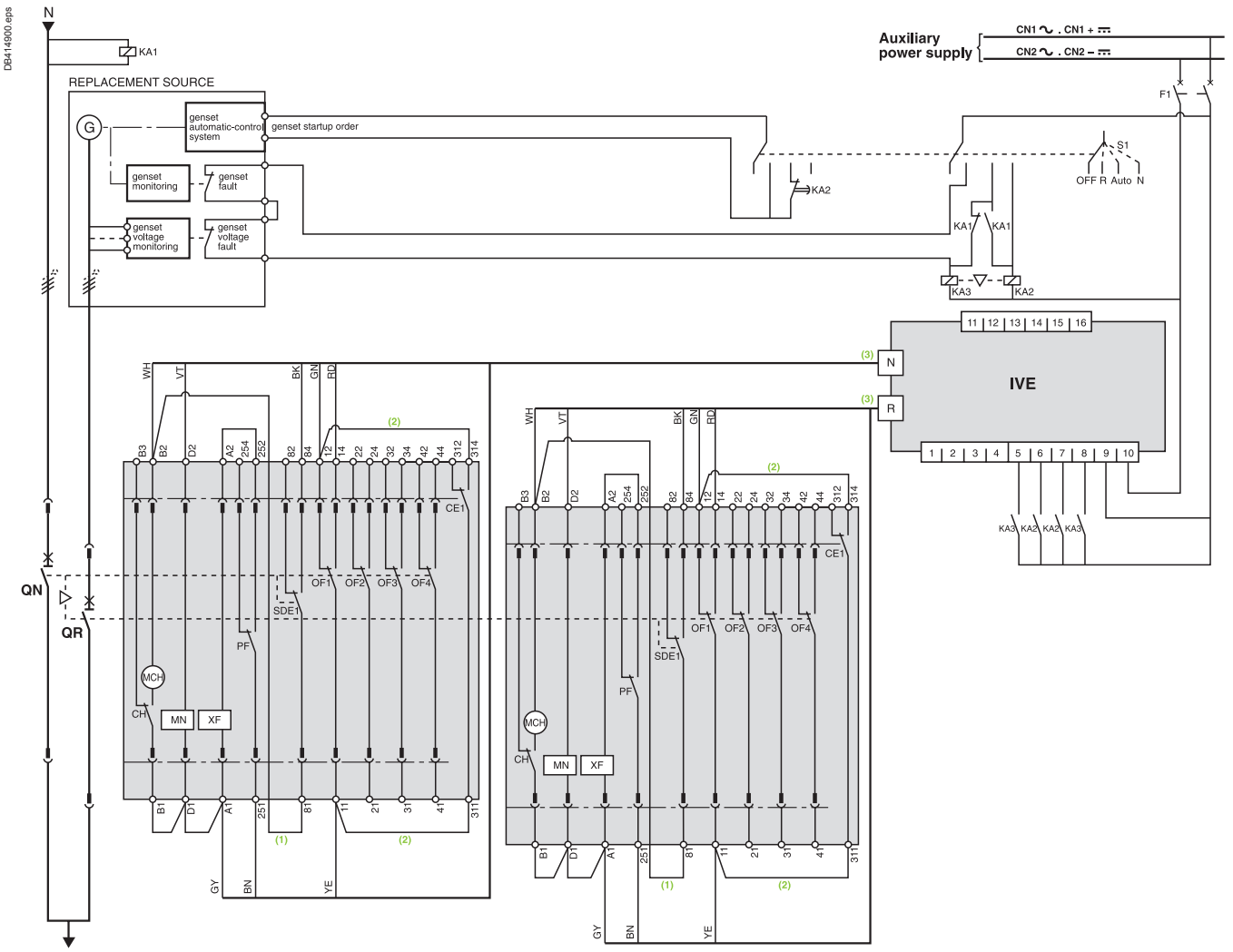

ATTENTION

The diagram shows the electrical wiring for circuit breakers. When wiring the SDE with **switch-disconnectors, connect wire BK to terminal 82.**

(1) Not to be wired for the "without lockout after a fault" solution.
(2) Not to be wired on fixed version.
(3) Prefabricated wiring supplied.

IMPORTANT

The relays controlling the closing order to the "Normal" and "Replacement" circuit breakers must be mechanically and/or electrically interlocked to prevent them from giving simultaneous closing commands.

It is recommended to use Tesys K relays from Schneider Electric reference LC2-K06010●●. These relays are mechanically and electrically interlocked.

Legends

QN	*"Normal" source Masterpact NT or NW*
QR	*"Replacement" source Masterpact NT or NW*
MCH	*spring-charging motor*
XF	*standard closing voltage release*
MN	*undervoltage release*
OF..	*breaker ON/OFF indication contact*
SDE1	*"fault-trip" indication contact*
PF	*"ready-to-close" contact*
CE1	*"connected-position" indication contact (carriage switch)*
CH	*"springs charged" indication contact*
IVE	*electrical interlocking and terminal block unit*
F1	*auxiliary power supply circuit breaker*
F2	*circuit breaker (high breaking capacity)*
S1	*control switches*
KA1	*auxiliary relay*
KA2	*time delay for genset startup order to avoid starting the genset for transient UN disturbances*
KA3	*auxiliary relay*

Wiring colour codes

RD	GN	BK	VT	YE	GY	WH	BN
red	green	black	violet	yellow	grey	white	brown

States permitted by mechanical interlocking system

Normal	Replacement
0	0
1	0
0	1

Note: diagram shown with circuit breakers in connected position, open, charged, and ready to close.
Auxiliary power supply = supply voltage of auxiliary relays (KA...) = supply voltage of electrical auxiliaries (electrical operation, MCH, MN, XF...).

Source-changeover systems with automatic controllers UA

2 Compact NSX100/630, NS630b/1600 or Masterpact NT/NW devices

Source-changeover system with UA controller

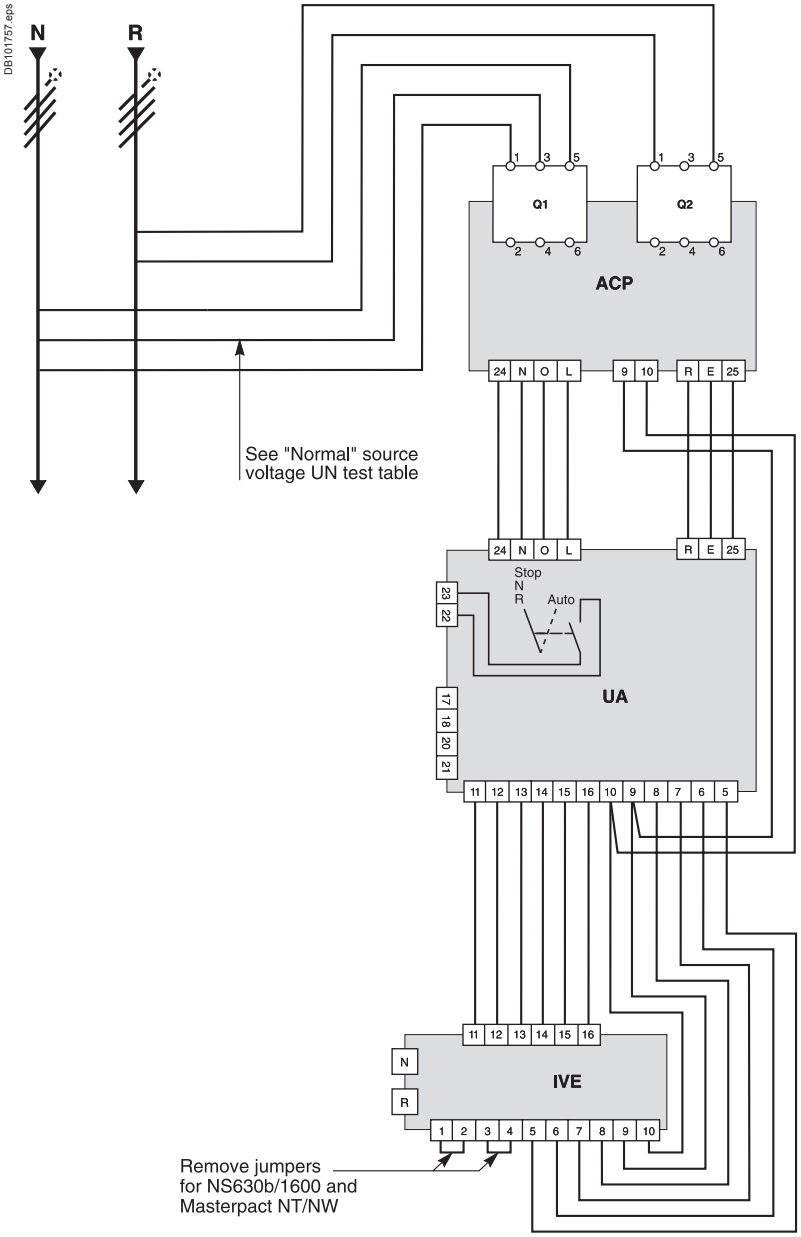

Load shedding and genset management

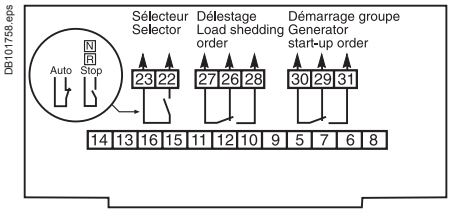

Transfer conditions

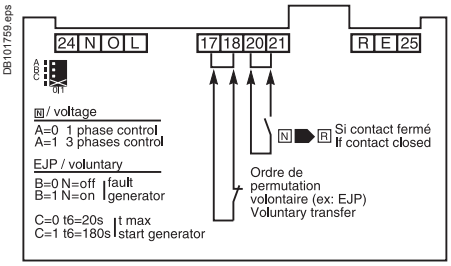

Terminals 20 and 21:
additional control contact (not part of controller).

Tests on "Normal" and "Replacement" source voltages

"Normal" source voltage UN test

DB101761.eps

Ref. UA UA150	29472 29474	29472 29474	29473 29475
Supply voltage / Switch position	N / φ 220/240VAC 50/60Hz	φ / φ 220/240VAC 50/60Hz	φ / φ 380/415VAC 50/60Hz 440V - 60Hz
A = 0	N φ 1L1 3L2 5L3 Q1	φ φ 1L1 3L2 5L3 Q1	φ φ 1L1 3L2 5L3 Q1
A = 1		φ φ φ 1L1 3L2 5L3 Q1	φ φ φ 1L1 3L2 5L3 Q1

"Replacement" source voltage UR test
The single-phase check for UR is implemented across terminals 1 and 5 of circuit breaker Q2.

Legends

Q1 *circuit breaker supplying and protecting the automatic-control circuits for the "Normal" source*
Q2 *circuit breaker supplying and protecting the automatic-control circuits for the "Replacement" source*
ACP *control plate*
UA *automatic controller*
IVE *electrical interlocking and terminal block unit*

Note: *diagram shown with circuits de-energised, circuit breakers open and relays in normal position.*

Source changeover system with UA controller

Controller settings

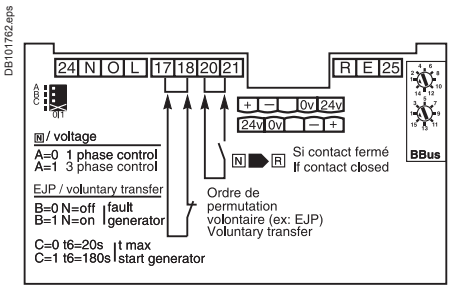

Using communication functions

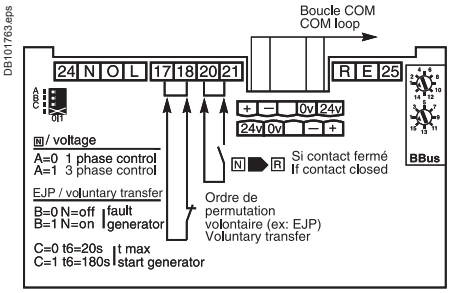

Tests on "Normal" source voltage

A = 0 single-phase test,
A = 1 three-phase test.

Voluntary transfert (e.g. for energy management)

- action in the event of genset failure

B = 0 circuit breaker N opens,
B = 1 circuit breaker N remains closed.

- maximum permissible genset startup time (T6)

C = 0 T = 120 s,
C = 1 T = 180 s.

After this time has elapsed, the genset is considered to have failed.

The address of the UA 150 controller is set using the two BBus dials.

Source-changeover systems with automatic controllers BA

2 Compact NSX100/630, NS630b/1600 or Masterpact NT/NW devices

Source-changeover system with BA controller

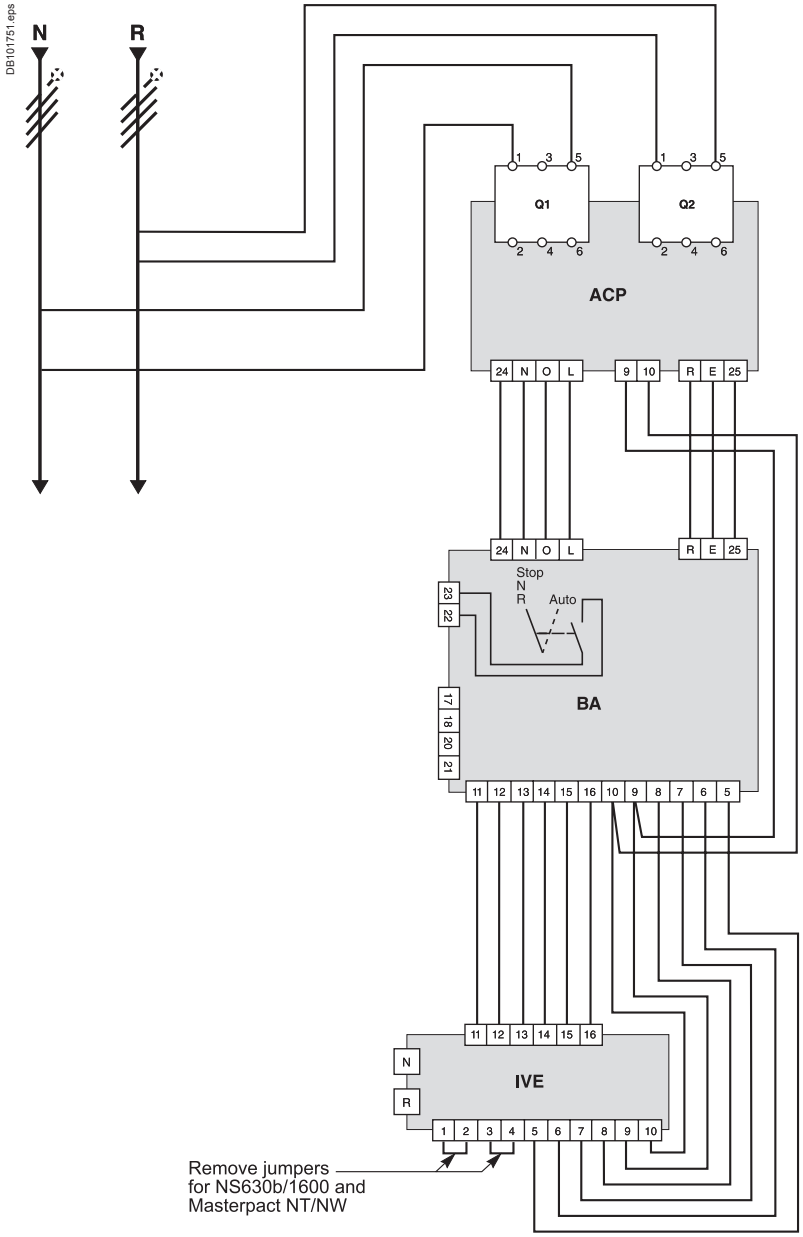

Coupling

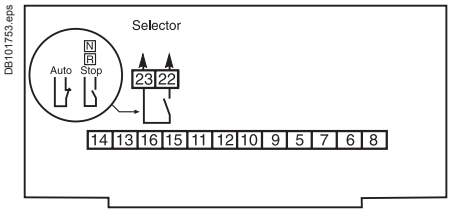

Transfer conditions

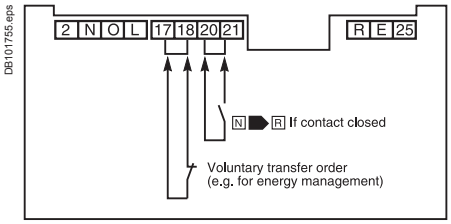

Terminals 20 and 21:
additional control contact (not part of controller).

Tests on "Normal" and "Replacement" source voltages
The single-phase check for UN and UR is implemented across terminals 1 and 5 of circuit breakers Q1 and Q2.

Legends

Q1	*circuit breaker supplying and protecting the automatic-control circuits for the "Normal" source*
Q2	*circuit breaker supplying and protecting the automatic-control circuits for the "Replacement" source*
ACP	*control plate*
BA	*automatic controller*
IVE	*electrical interlocking and terminal block unit*

Note: *diagram shown with circuits de-energised, circuit breakers open and relays in normal position.*

Remote-operated source-changeover systems

3 Masterpact NW devices

Diagram no. 51156906

2 normal sources and 1 replacement source: electrical interlocking without lockout after a fault

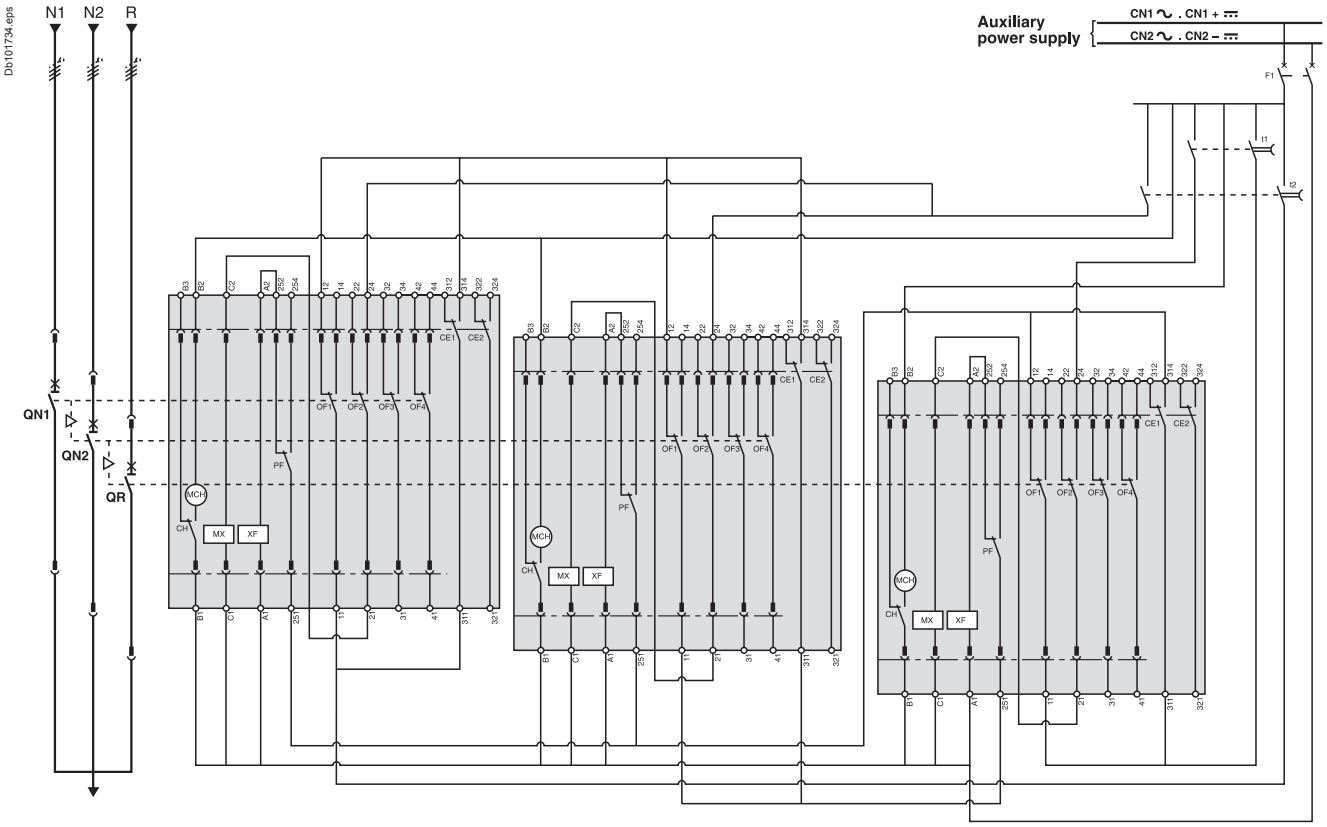

Legends

QN...	*"Normal" source Masterpact NW*
QR	*"Replacement" source Masterpact NW*
MCH	*spring-charging motor*
MX	*standard opening voltage release*
XF	*standard closing voltage release*
OF..	*breaker ON/OFF indication contact*
PF	*"ready-to-close" contact*
CE	*"connected-position" indication contact (carriage switch)*
CH	*"springs charged" indication contact*
F1	*auxiliary power supply circuit breaker*
t1	*order for transfer from "R" to "N1 + N2" (QN1 and QN2 closing time delay = 0.25 sec. minimum)*
t2	*order for transfer from "N1 + N2" to "R" (QR closing time delay = 0.25 sec. minimum)*

States permitted by mechanical interlocking system

Normal 1	Normal 2	Replacement
0	0	0
1	1	0
0	0	1
1	0	0
0	1	0

Note: *diagram shown with circuit breakers in connected position, open, charged, and ready to close.*
Auxiliary power supply = supply voltage of auxiliary relays (KA...) = supply voltage of electrical auxiliaries (electrical operation, MCH, MX, XF...).

Remote-operated source-changeover systems

3 Masterpact NW devices

Diagram no. 51156907

2 normal sources and 1 replacement source: electrical interlocking with lockout after a fault

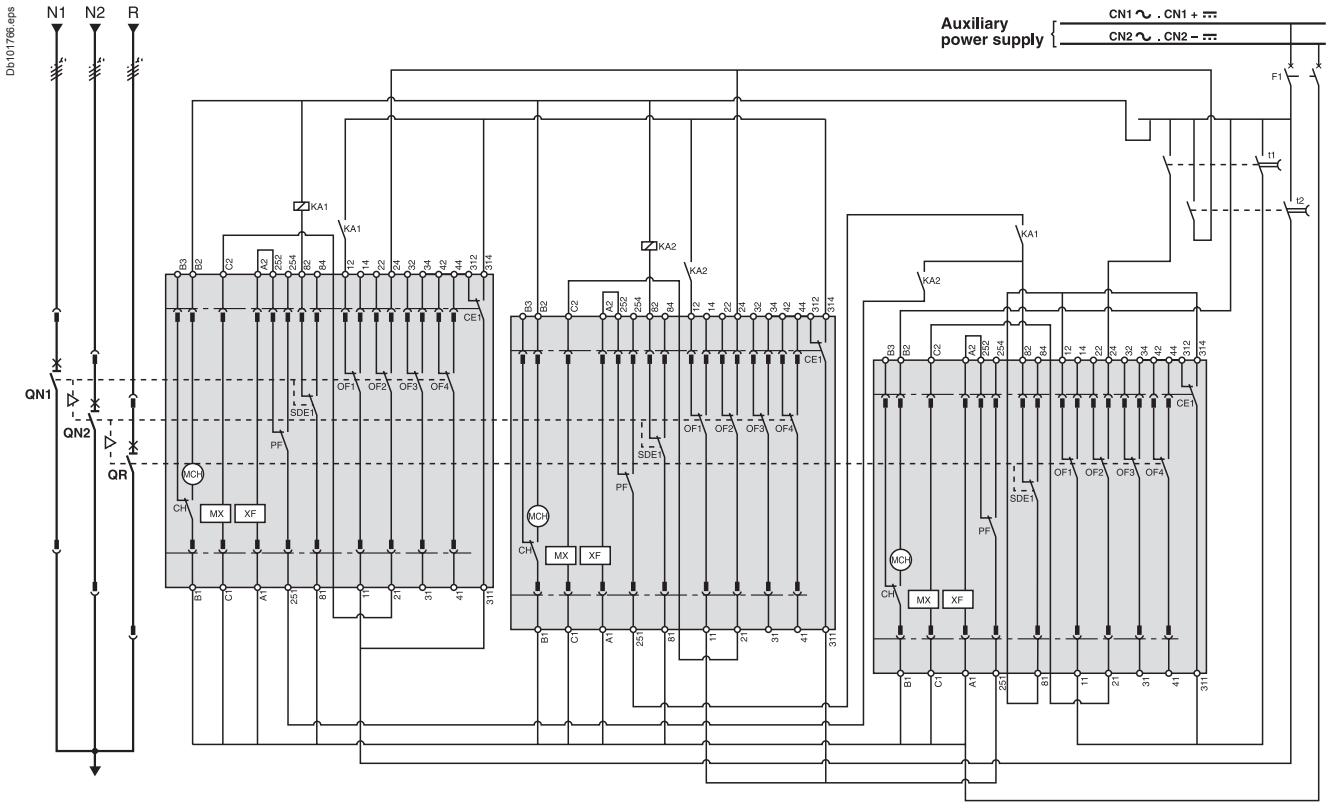

ATTENTION

The diagram shows the electrical wiring for circuit breakers. When wiring the SDE with **switch-disconnectors, connect the SDE to terminals 81 and 84.**

Legends

QN...	*"Normal" source Masterpact NW*
QR	*"Replacement" source Masterpact NW*
MCH	*spring-charging motor*
MX	*standard opening voltage release*
XF	*standard closing voltage release*
OF...	*breaker ON/OFF indication contact*
SDE1	*"fault-trip" indication contact*
PF	*"ready-to-close" contact*
CE1	*"connected-position" indication contact (carriage switch)*
CH	*"springs charged" indication contact*
F1	*auxiliary power supply circuit breaker*
S1	*control switches*
S2	*source selection switches*
KA1	*auxiliary relay*
KA2	*auxiliary relays with 10 to 180 sec. time delay*
t1	*order for transfer from "R" to "N1 + N2" (QN1 and QN2 closing time delay = 0.25 sec. minimum)*
t2	*order for transfer from "N1 + N2" to "R" (QR closing time delay = 0.25 sec. minimumm)*

States permitted by mechanical interlocking system

Normal 1	Normal 2	Replacement
0	0	0
1	1	0
0	0	1
1	0	0
0	1	0

Note: diagram shown with circuit breakers in connected position, open, charged, and ready to close.
Auxiliary power supply = supply voltage of auxiliary relays (KA...) = supply voltage of electrical auxiliaries (electrical operation, MCH, MX, XF...).

Schneider Electric

Remote-operated source-changeover systems

3 Masterpact NW devices

Diagram no. 51156908

2 normal sources and 1 replacement source: automatic-control system for generator set without lockout after a fault (with MN)

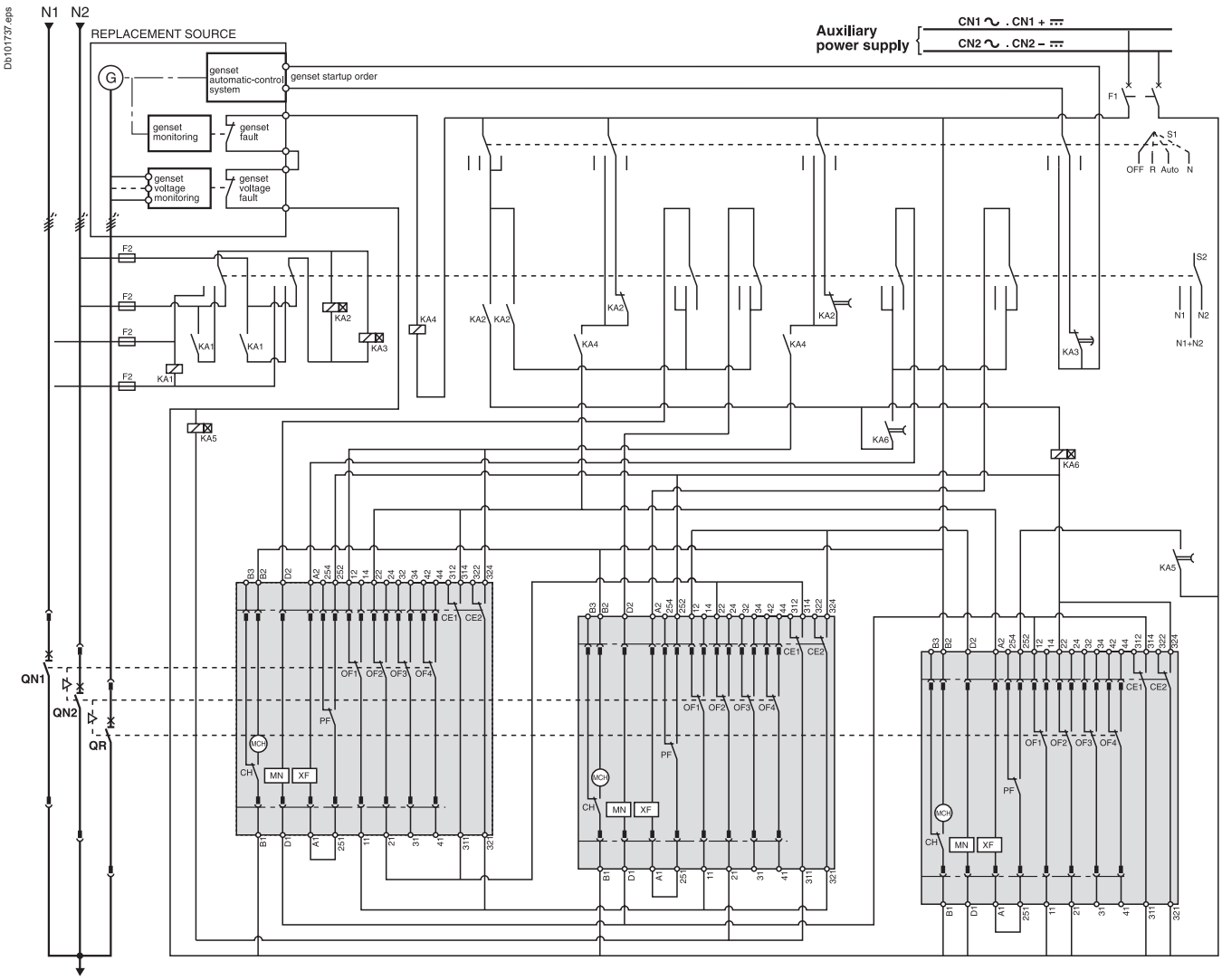

Legends

QN...	*"Normal" source Masterpact NW*
QR	*"Replacement" source Masterpact NW*
MCH	*spring-charging motor*
XF	*standard closing voltage release*
MN	*undervoltage release*
OF...	*breaker ON/OFF indication contact*
PF	*"ready-to-close" contact*
CE...	*"connected-position" indication contact (carriage switch)*
CH	*"springs charged" indication contact*
F1	*auxiliary power supply circuit breaker*
F2/F3	*circuit breaker (high breaking capacity)*
S1	*control switches*
S2	*source selection switches*
KA1	*auxiliary relay*
KA2	*auxiliary relays with 10 to 180 sec. time delay*
KA3	*auxiliary relays with 0.1 to 30 sec. time delay*
KA4	*auxiliary relay*
KA5	*auxiliary relays with 0.25 sec. time delay*
KA6	*auxiliary relays with 0.25 sec. time delay*

States permitted by mechanical interlocking system and with associated automatism

Normal 1	Normal 2	Replacement
0	0	0
1	1	0
0	0	1
1	0	0
0	1	0

Note: *diagram shown with circuit breakers in connected position, open, charged, and ready to close.*
Auxiliary power supply = supply voltage of auxiliary relays (KA...) = supply voltage of electrical auxiliaries (electrical operation, MCH, MN, XF...).

Remote-operated source-changeover systems

3 Masterpact NW devices

Diagram no. 51156909

2 normal sources and 1 replacement source: automatic-control system for generator set with lockout after a fault (with MN)

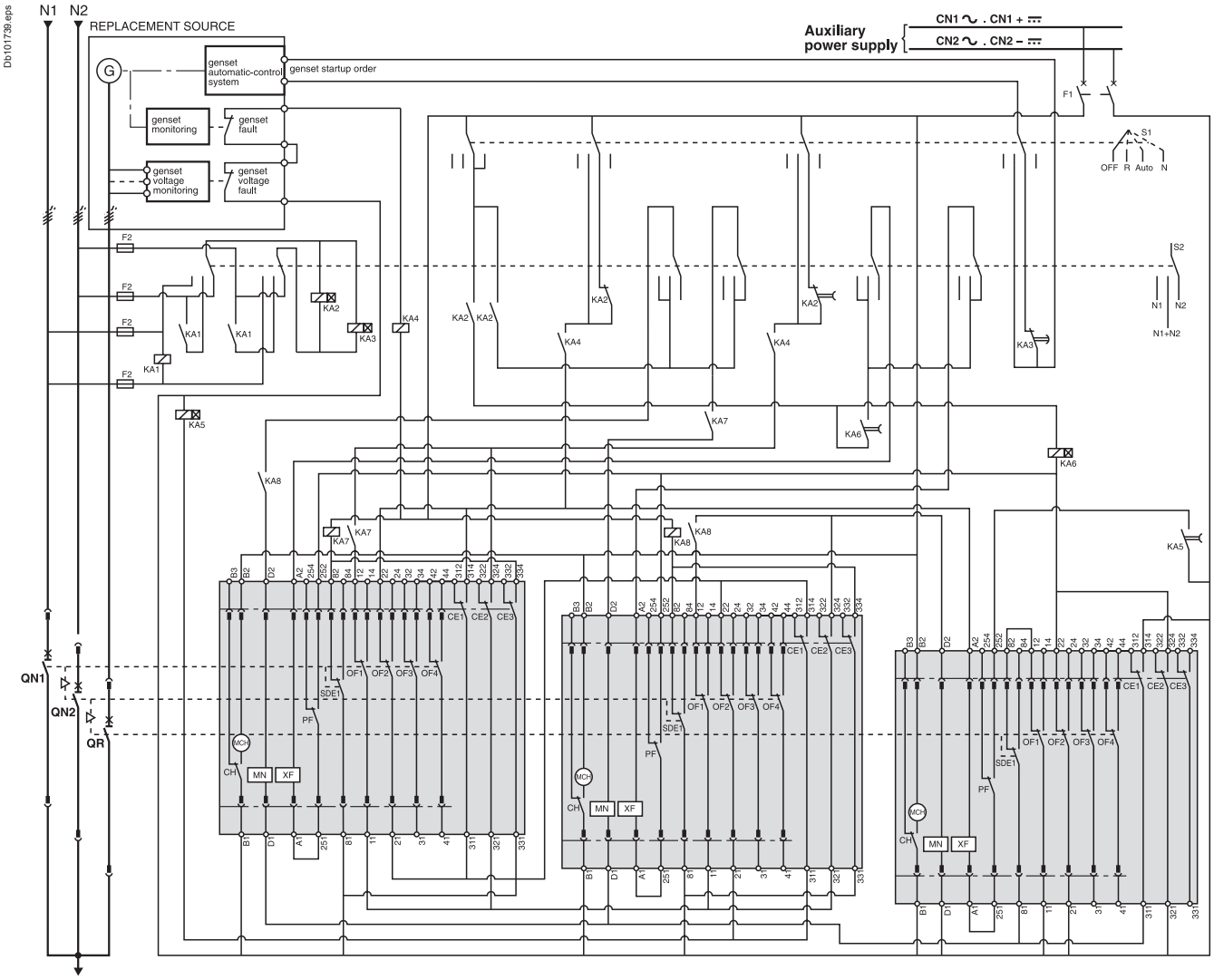

ATTENTION

The diagram shows the electrical wiring for circuit breakers. When wiring the SDE with **switch-disconnectors, connect the SDE to terminals 81 and 84.**

Legends

QN...	*"Normal" source Masterpact NW*
QR	*"Replacement" source Masterpact NW*
MCH	*spring-charging motor*
XF	*standard closing voltage release*
MN	*undervoltage release*
OF...	*breaker ON/OFF indication contact*
SDE1	*"fault-trip" indication contact*
PF	*"ready-to-close" contact*
CE...	*"connected-position" indication contact (carriage switch)*
CH	*"springs charged" indication contact*
F1	*auxiliary power supply circuit breaker*
F2/F3	*circuit breaker (high breaking capacity)*
S1	*control switches*
S2	*source selection switches*
KA1	*auxiliary relay*
KA2	*auxiliary relays with 10 to 180 sec. time delay*
KA3	*auxiliary relays with 0.1 to 30 sec. time delay*
KA4	*auxiliary relay*
KA5	*auxiliary relays with 0.25 sec. time delay*
KA6	*auxiliary relays with 0.25 sec. time delay*
KA7	*auxiliary relay*
KA8	*auxiliary relay*

States permitted by mechanical interlocking system and with associated automatism

Normal 1	Normal 2	Replacement
0	0	0
1	1	0
0	0	1
1	0	0
0	1	0

Note: *diagram shown with circuit breakers in connected position, open, charged, and ready to close.*
Auxiliary power supply = supply voltage of auxiliary relays (KA...) = supply voltage of electrical auxiliaries (electrical operation, MCH, MN, XF...).

Remote-operated source-changeover systems

3 Masterpact NW devices

Diagram no. 51156910

3 sources with only 1 device closed: electrical interlocking without lockout after a fault

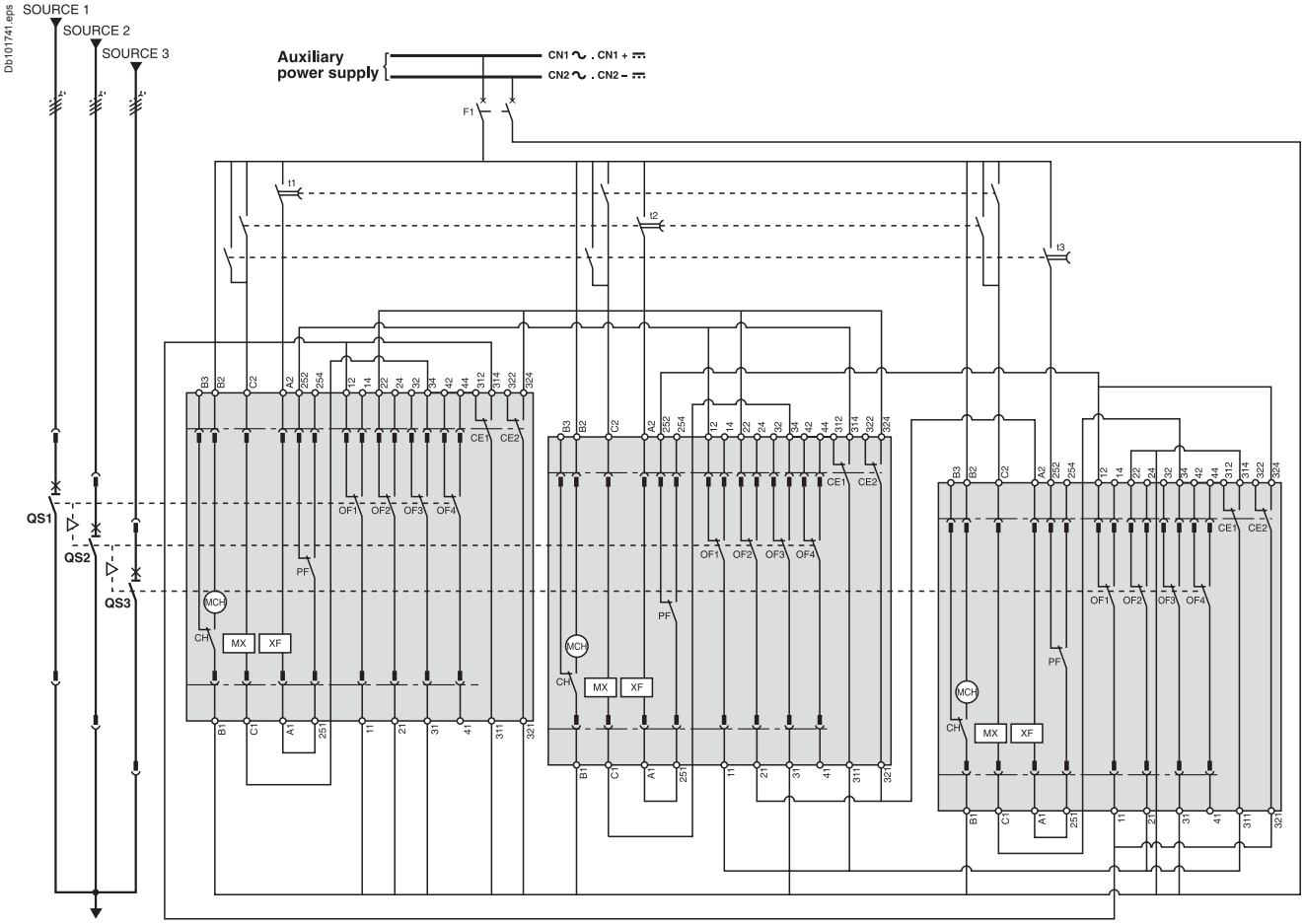

Legends

QS...	*"Source" Masterpact NW*
MCH	*spring-charging motor*
MX	*standard opening voltage release*
XF	*standard closing voltage release*
OF...	*breaker ON/OFF indication contact*
PF	*"ready-to-close" contact*
CE...	*"connected-position" indication contact (carriage switch)*
CH	*"springs charged" indication contact*
F1	*auxiliary power supply circuit breaker*
t1	*order for transfer to "Source 1" (QS1 closing time delay = 0.25 sec. minimum)*
t2	*order for transfer to "Source 2" (QS2 closing time delay = 0.25 sec. minimum)*
t3	*order for transfer to "Source 3" (QS3 closing time delay = 0.25 sec. minimum)*

States permitted by mechanical interlocking system

Source 1	Source 2	Source 3
0	0	0
1	0	0
0	1	0
0	0	1

Note: *diagram shown with circuit breakers in connected position, open, charged, and ready to close.*
Auxiliary power supply = supply voltage of auxiliary relays (KA...) = supply voltage of electrical auxiliaries (electrical operation, MCH, MX, XF...).

Remote-operated source-changeover systems

3 Masterpact NW devices

Diagram no. 51156911

3 sources with only 1 device closed: electrical interlocking with lockout after a fault

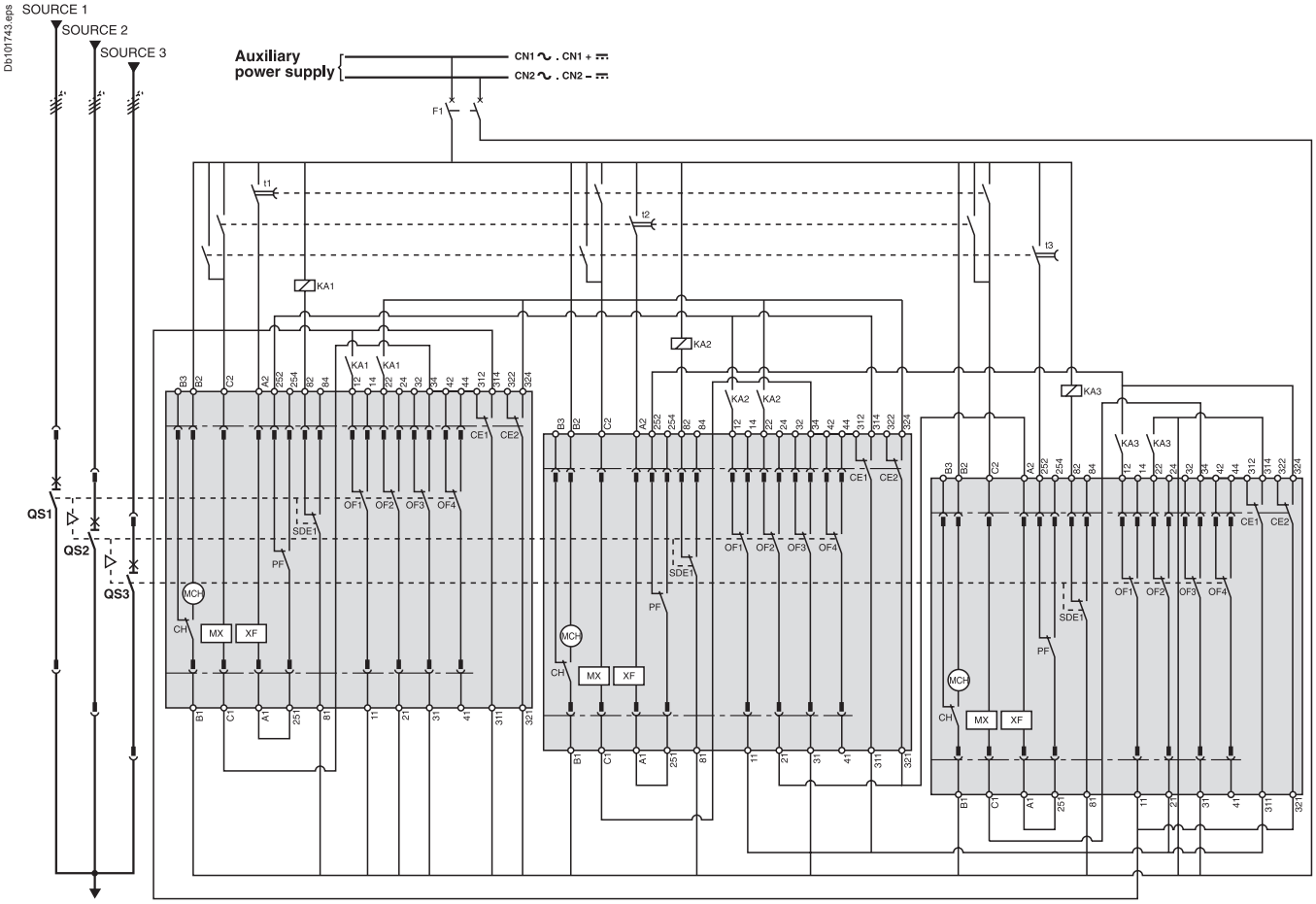

ATTENTION

The diagram shows the electrical wiring for circuit breakers. When wiring the SDE with **switch-disconnectors, connect the SDE to terminals 81 and 84.**

Legends

QS...	*"Source" Masterpact NW*
MCH	*spring-charging motor*
MX	*standard opening voltage release*
XF	*standard closing voltage release*
OF...	*breaker ON/OFF indication contact*
SDE1	*"fault-trip" indication contact*
PF	*"ready-to-close" contact*
CE...	*"connected-position" indication contact (carriage switch)*
CH	*"springs charged" indication contact*
F1	*auxiliary power supply circuit breaker*
t1	*order for transfer to "Source 1" (QS1 closing time delay = 0.25 sec. minimum)*
t2	*order for transfer to "Source 2" (QS2 closing time delay = 0.25 sec. minimum)*
t3	*order for transfer to "Source 3" (QS3 closing time delay = 0.25 sec. minimum)*
KA1	*auxiliary relays*
KA2	*auxiliary relays*
KA3	*auxiliary relays*

States permitted by mechanical interlocking system

Source 1	Source 2	Source 3
0	0	0
1	0	0
0	1	0
0	0	1

Note: *diagram shown with circuit breakers in connected position, open, charged, and ready to close.*
Auxiliary power supply = supply voltage of auxiliary relays (KA...) = supply voltage of electrical auxiliaries (electrical operation, MCH, MX, XF...).

Schneider Electric

Remote-operated source-changeover systems

3 Masterpact NW devices

Diagram no. 51156912

2 sources and 1 coupling: electrical interlocking without lockout after a fault

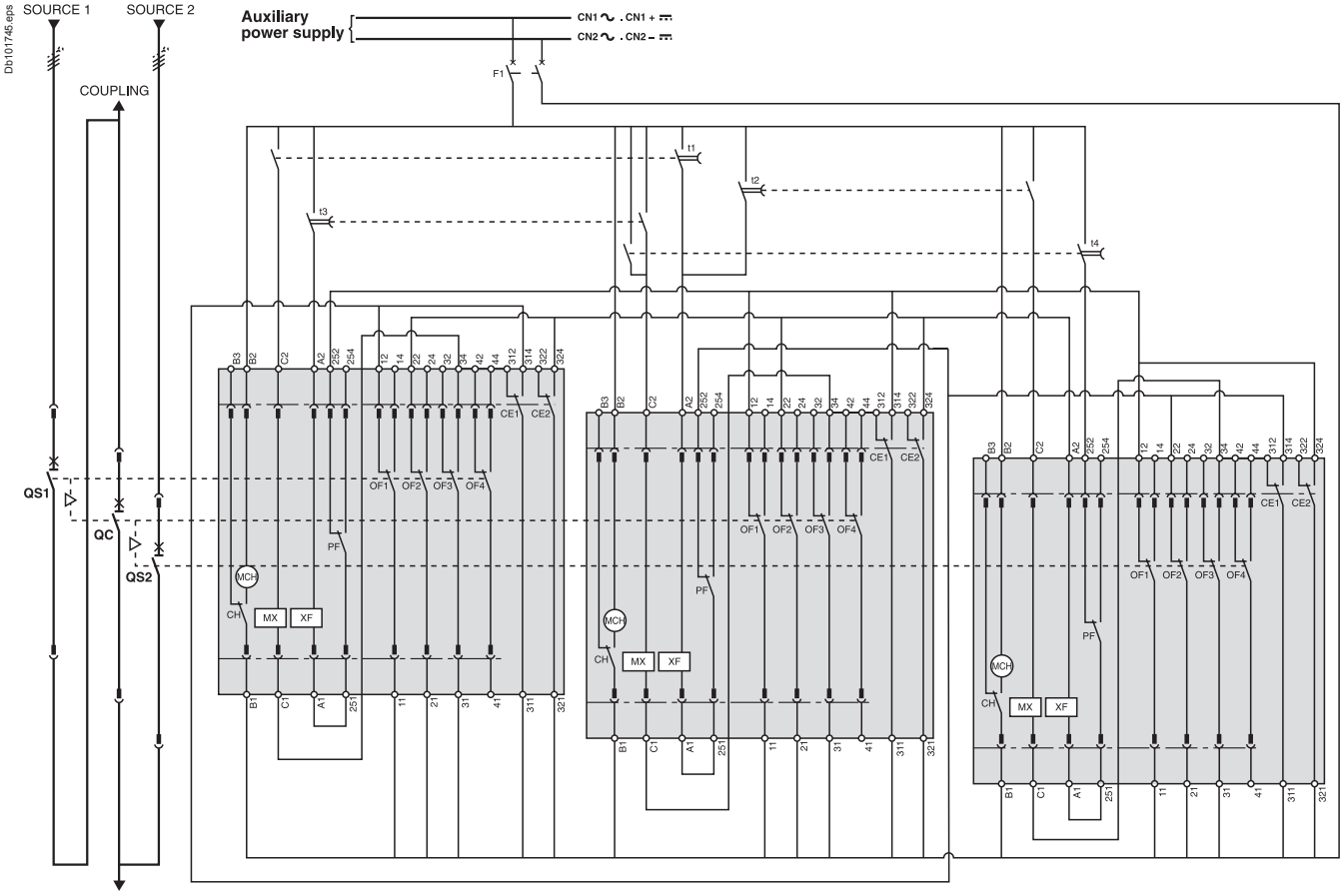

Legends

QS...	*"Source" Masterpact NW*
QC	*"Coupling" Masterpact NW*
MCH	*spring-charging motor*
MX	*standard opening voltage release*
XF	*standard closing voltage release*
OF...	*breaker ON/OFF indication contact*
PF	*"ready-to-close" contact*
CE...	*"connected-position" indication contact (carriage switch)*
CH	*"springs charged" indication contact*
F1	*auxiliary power supply circuit breaker*
t1	*coupling order for "Source 1 failure" (QC closing time delay = 0.25 sec. minimum)*
t2	*coupling order for "Source 2 failure" (QC closing time delay = 0.25 sec. minimum)*
t3	*coupling order for "Source 1 restored" (QS1 closing time delay = 0.25 sec. minimum)*
t4	*coupling order for "Source 2 restored " (QS2 closing time delay = 0.25 sec. minimum)*

States permitted by mechanical interlocking system

Source 1	Source 2	Coupling
0	0	0
1	1	0
1	0	1
0	1	1
1	0	0
0	1	0
0	0	1

Note: *diagram shown with circuit breakers in connected position, open, charged, and ready to close.*
Auxiliary power supply = supply voltage of auxiliary relays (KA...) = supply voltage of electrical auxiliaries (electrical operation, MCH, MX, XF...).

Remote-operated source-changeover systems

3 Masterpact NW devices

Diagram no. 51156913

2 sources and 1 coupling: electrical interlocking with lockout after a fault

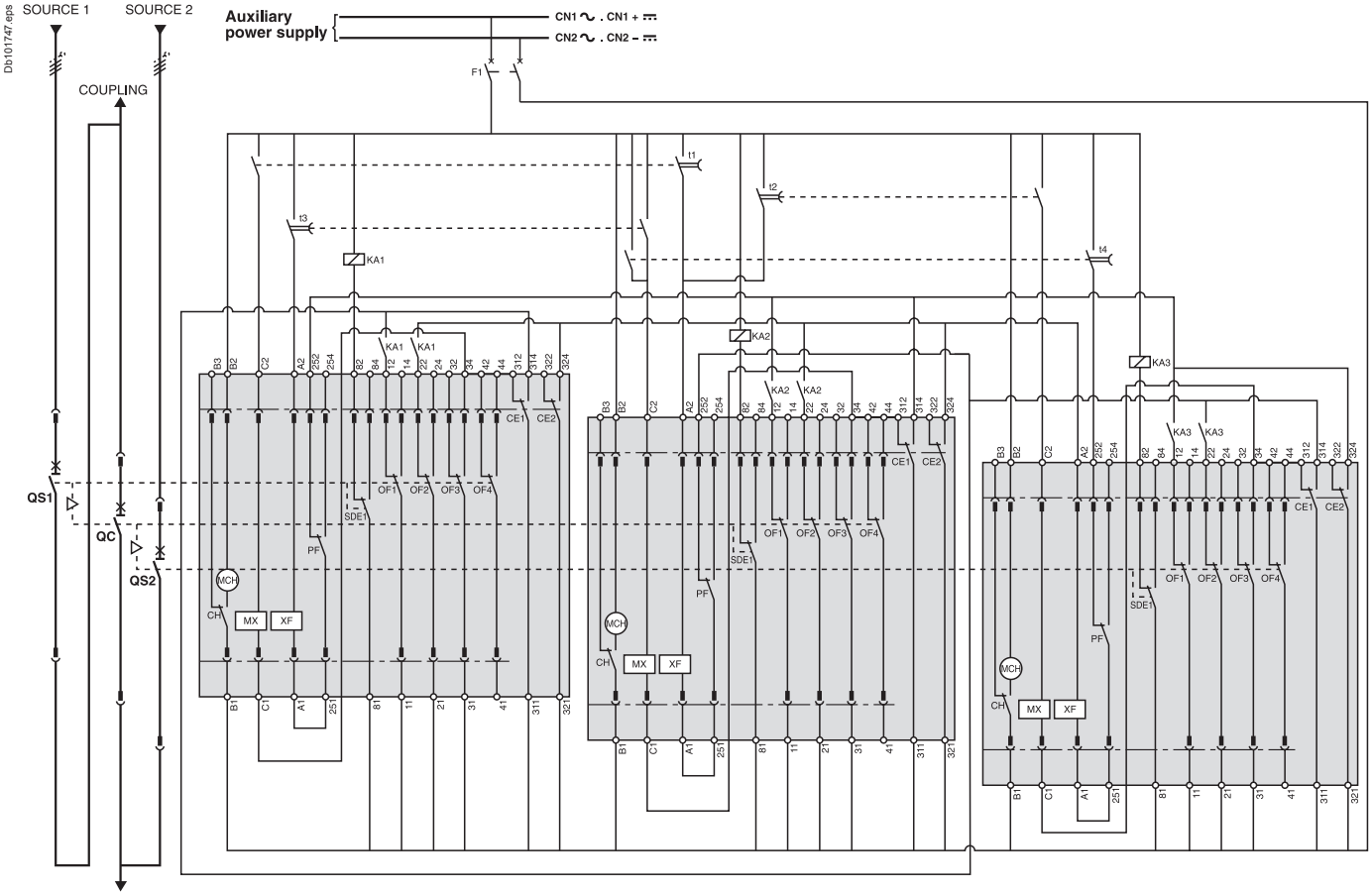

ATTENTION

The diagram shows the electrical wiring for circuit breakers. When wiring the SDE with **switch-disconnectors, connect the SDE to terminals 81 and 84.**

Legends

QS...	*"Source" Masterpact NW*
QC	*"Coupling" Masterpact NW*
MCH	*spring-charging motor*
MX	*standard opening voltage release*
XF	*standard closing voltage release*
OF...	*breaker ON/OFF indication contact*
SDE1	*"fault-trip" indication contact*
PF	*"ready-to-close" contact*
CE...	*"connected-position" indication contact (carriage switch)*
CH	*"springs charged" indication contact*
F1	*auxiliary power supply circuit breaker*
t1	*coupling order for "Source 1 failure" (QC closing time delay = 0.25 sec. minimum)*
t2	*coupling order for "Source 2 failure" (QC closing time delay = 0.25 sec. minimum)*
t3	*coupling order for "Source 1 restored" (QS1 closing time delay = 0.25 sec. minimum)*
t4	*coupling order for "Source 2 restored " (QS2 closing time delay = 0.25 sec. minimum)*
KA1	*auxiliary relays*
KA2	*auxiliary relays*
KA3	*auxiliary relays*

States permitted by mechanical interlocking system

Source 1	Source 2	Coupling
0	0	0
1	1	0
1	0	1
0	1	1
1	0	0
0	1	0
0	0	1

Note: *diagram shown with circuit breakers in connected position, open, charged, and ready to close.*
Auxiliary power supply = supply voltage of auxiliary relays (KA...) = supply voltage of electrical auxiliaries (electrical operation, MCH, MX, XF...).

Schneider Electric

Remote-operated source-changeover systems

3 Masterpact NW devices

Diagram no. 51156914

2 sources and 1 coupling: automatic-control system with lockout after a fault

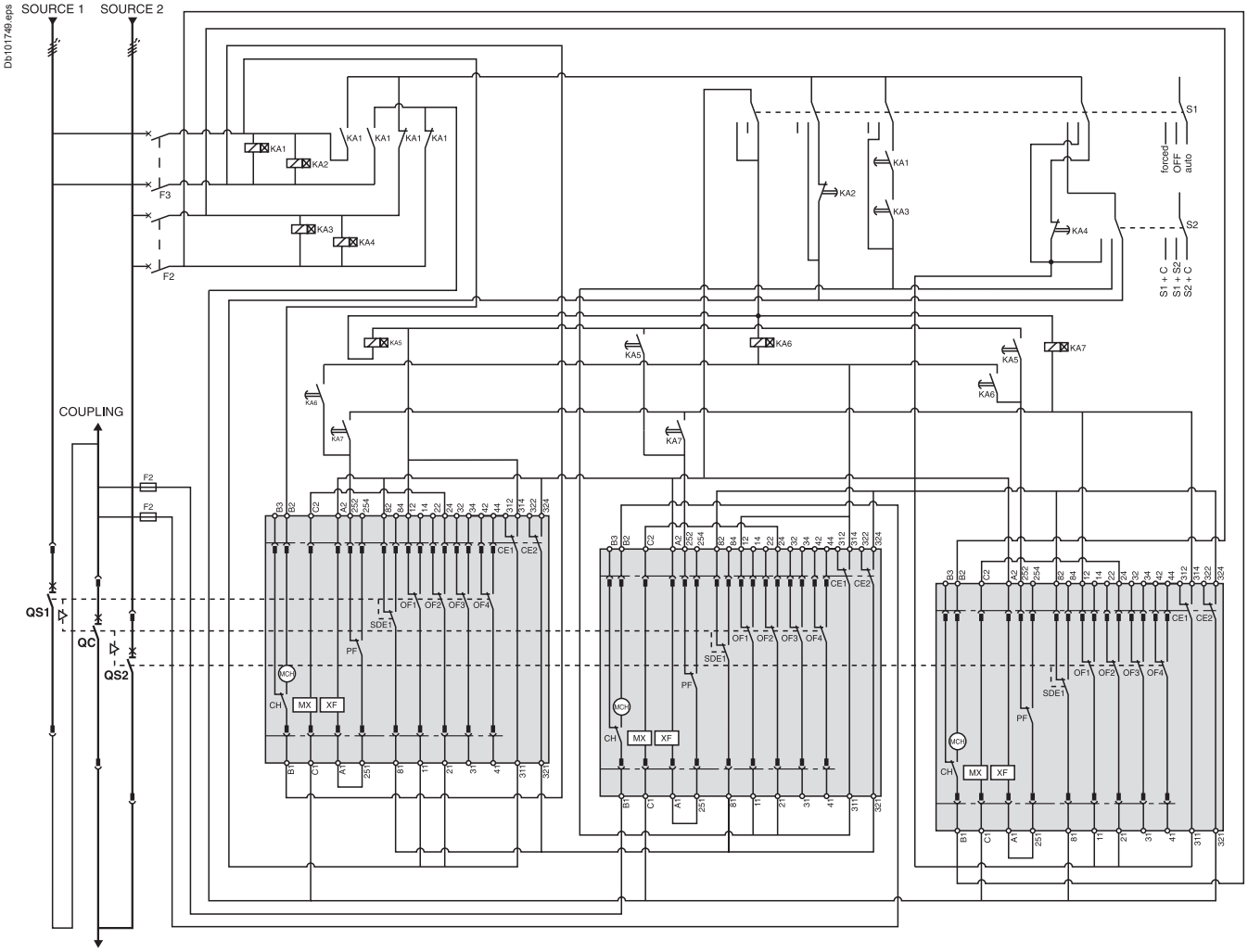

ATTENTION

The diagram shows the electrical wiring for circuit breakers. When wiring the SDE with **switch-disconnectors, connect the SDE to terminals 81 and 84.**

Legends

QS...	*"Source" Masterpact NW*
QC	*"Coupling" Masterpact NW*
MCH	*spring-charging motor*
MX	*standard opening voltage release*
XF	*standard closing voltage release*
OF...	*breaker ON/OFF indication contact*
SDE1	*"fault trip" indication contact*
PF	*"ready-to-close" contact*
CE...	*"connected-position" indication contact (carriage switch)*
CH	*"springs charged" indication contact*
F1	*auxiliary power supply circuit breaker*
F2/F3	*circuit breaker (high breaking capacity)*
S1	*control switches*
S2	*source selection switches*
KA1	*auxiliary relays with 10 to 180 sec. time delay*
KA2	*auxiliary relays with 0.1 to 30 sec. time delay*
KA3	*auxiliary relays with 10 to 180 sec. time delay*
KA4	*auxiliary relays with 0.1 to 30 sec. time delay*
KA5	*auxiliary relays with 0.25 sec. time delay*
KA6	*auxiliary relays with 0.25 sec. time delay*
KA7	*auxiliary relays with 0.25 sec. time delay*

States permitted by mechanical interlocking system and with associated automatism

Source 1	Source 2	Coupling
0	0	0
1	1	0
1	0	1
0	1	1
1	0	0
0	1	0
0	0	1

Note: diagram shown with circuit breakers in connected position, open, charged, and ready to close.
Auxiliary power supply = supply voltage of auxiliary relays (KA...) = supply voltage of electrical auxiliaries (electrical operation, MCH, MX, XF...).

TOOLS

Ecodial

Ecodial software is dedicated to LV electrical installation calculation in accordance with the IEC60364 international standard or national standards.

This 4th generation, "Ecodial Advance Calculation 4", offers a new ergonomic and new features:

- operating mode that allows easy calculation in case of installation with different type of sources (parallel transformers, back-up generators...)
- discrimination analysis associating curves checking and discrimination tables
- direct access to protection settings including residual current protections
- easy selection of alternate solutions or manual selection of a product.

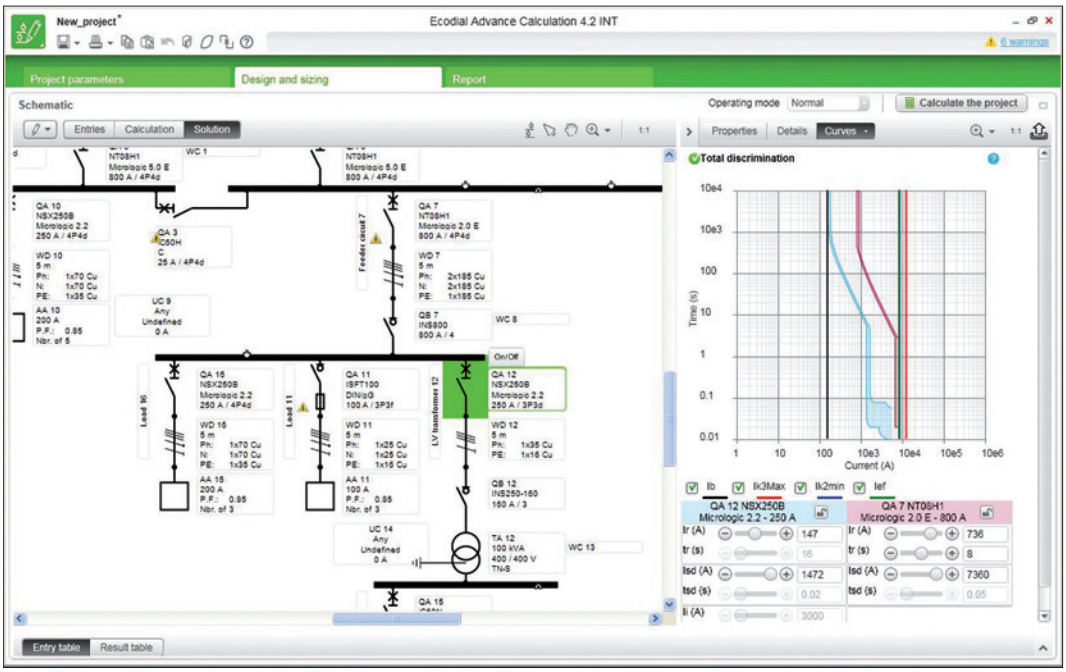

Catalogue numbers and order forms

Presentation 2
Functions and characteristics A-1
Dimensions B-1
Electrical diagrams C-1

Catalogue numbers

Source-changeover systems for 2 devices
Compact INS40 to INS2500 and INV100 to INV2500 D-2
Compact NSX100 to NSX630 D-3
Compact NS630b to NS1600 circuit breakers and switch-disconnectors D-5
Masterpact NT circuit breakers and switch-disconnectors D-7

Source-changeover systems for 2 or 3 devices
Masterpact NW circuit breakers and switch-disconnectors D-8

Order forms

Source-changeover systems for 2 devices
Compact INS40 to INS630 switch-disconnectors D-10
Compact NSX100 to NSX630 / Circuit breakers and switch-disconnectors D-12
Compact NS630b to NS1600 / Circuit breakers and switch-disconnectors D-14
Masterpact NT or NW / Circuit breakers and switch-disconnectors D-16

Source-changeover systems for 3 devices
Masterpact NW / Circuit breakers and switch-disconnectors D-18

Source-changeover systems for 2 devices

Compact INS40 to INS2500 and INV100 to INV2500

Manual source-changeover systems Compact INS40 to INS630 and INV100 to INV630

Interlocking for rotary handle

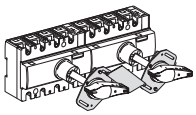
DB107710.eps

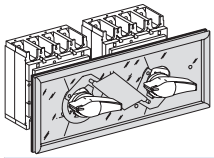
DB404077.eps

	3/4P
Mechanical device for INS40 to INS160 equipped with an extended rotary handle	28953
Mechanical device for INS250-100 to INS250/INV100 to INV250 equipped with a direct or extended rotary handle	31073
Mechanical device for INS/INV320 to INS/INV630 equipped with a direct or extended rotary handle	31074

Complete assembly source-changeover systems Compact INS250 to INS630

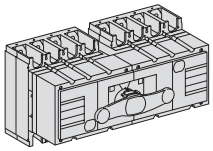
DB404170.eps

	3P	4P
With Compact INS250-100A	31140	31141
With Compact INS250-160A	31144	31145
With Compact INS250-200A	31142	31143
With Compact INS250	31146	31147
With Compact INS320	31148	31149
With Compact INS400	31150	31151
With Compact INS500	31152	31153
With Compact INS630	31154	31155

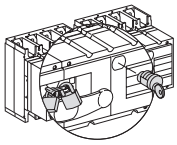
DB107711.eps

Locking for INS complete source changeover assembly

Handle locking by 1 to 3 padlocks (in OFF position)		Built in
By keylock	Keylocking device	31097
	+ Ronis 1351B.500 keylock	41940
	or + Profalux KS5 B24 D4Z keylock	42888

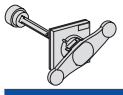
DB404079.eps

Rotary handle

Extended front control for complete source changeover assembly	31055

Manual source-changeover systems Compact INS250 to INS2500 and INV250 to INV2500 by keylock

Interlocking

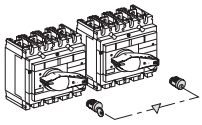
Db101549.eps

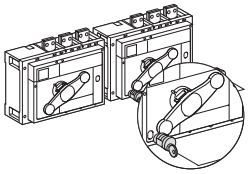
DB404080.eps

		3/4P
Locking device for Ronis/Profalux keylocks on INS250-100 to INS250/INV100 to INV250	2x	31087
Locking device for Ronis/Profalux keylocks on INS/INV320 to INS/INV630	2x	31088
Locking device for Ronis/Profalux keylocks on INS/INV630b to INS/INV2500	2x	31291
+ Ronis 1351B.500 keylock (2 keylocks / 1 key)		41950
or + Profalux KS5 B24 D4Z keylock (2 keylocks / 1 key)		42878

Connection accessories

Downstream coupling accessories

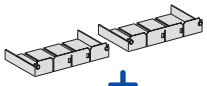
DB101062.eps

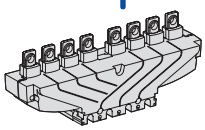
DB413292.eps

Short terminal shields (1 pair) + “normal” source/“replacement” source

	3/4P
INS250/INS250	LV429359
INS320 to INS630/INS320 to INS630	LV432620

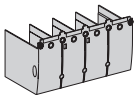
Db403921.eps

Long terminal shields (1 piece)

INS250 long terminal shield	LV429518
INS320 to INS630	
Long terminal shield, 45 mm (1 piece)	LV432594
Long terminal shield for spreaders, 52.5 mm (1 piece)	LV432596

Terminal extensions

DB115652.eps

Spreaders	52.5 mm	4P	LV432491

Source-changeover systems for 2 devices

Compact NSX100 to NSX630

Manual source changeover

Mechanical interlocking

DB404083.eps

For toggle controlled circuit breakers	NSX100...250	**LV429354**
	NSX400...630	**LV432614**

DB404084.eps

For rotary handled circuit breakers	NSX100...250	**LV429369**
	NSX400...630	**LV432621**

Key lock interlocking

DB404085.eps

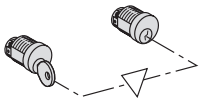

For rotary handled or remote controlled circuit breakers		
2 locks, 1 key	Ronis 1351B.500	**41950**
	Profalux KS5 B24 D4Z	**42878**

Remote controlled source changeover

Plate + IVE unit

DB404086.eps

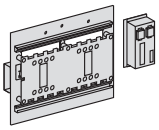

Source "normal"/source "replacement" (identical voltages)		**24 to 250 V DC**	**48 to 415 V AC 50/60 Hz 440 V 60 Hz**
NSX100...250/NSX100...250			
Plate + IVE unit [1]		**29351**	**29350**
Plate		**29349**	**29349**
IVE unit		**29356**	**29352**
Auxiliary switches 2 OF + 2 SDE	4 x	**29450**	4 x **29450**
Spare wiring system (device/IVE unit)		**29365**	**29365**
Back sockets option add:	Only long RC	[2]	[2]
Plug in base option add:	Plug in kit	[2]	[2]
NSX400...630/NSX100...630			
Plate + IVE unit [1]		**32611**	**32610**
Plate		**32609**	**32609**
IVE unit		**29356**	**29352**
Auxiliary switches 2 OF + 2 SDE	4 x	**29450**	4 x **29450**
Spare wiring system (device/IVE unit)		**29365**	**29365**
Back sockets option add:	Only long RC	[2]	[2]
Plug in base option add:	Plug in kit	[2]	[2]
	Adaptator kit for NSX100...250 1 x	**32618**	1 x **32618**

Control unit option

DB404087.eps

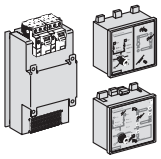

	110/127 V AC 50/60 Hz	**220/240 V AC 50/60 Hz**	**380/415 V AC 50/60 Hz 440 V 60 Hz**
ACP + controller BA [1]		**29470**	**29471**
Plate ACP		**29363**	**29364**
Controller BA		**29376**	**29377**
ACP + controller UA [1]	**29448**	**29472**	**29473**
Plate ACP	**29447**	**29363**	**29364**
Controller UA	**29446**	**29378**	**29380**
ACP + controller UA150 [1] (communication option)		**29474**	**29475**
Plate ACP		**29363**	**29364**
Controller UA150		**29379**	**29381**

Wiring cable between UA/BA and ACP/IVE

Wiring cable (1.5 meter)	**29368**	**29368**

(1) The supply voltages UA/BA controller, ACP plate, IVE unit and the remote control must be identical whatever the source changeover type.
(2) See products pages.

Source-changeover systems for 2 devices

Compact NSX100 to NSX630 (cont.)

Connection accessories

Downstream coupling accessories

DB101062.eps

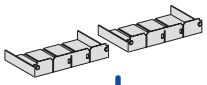

DB413273.eps

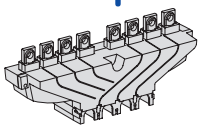

Short terminal shields (1 pair) + "normal" source/"replacement" source

	3P	4P
NSX100...250/NSX100...250 / 250 A	**LV429358**	**LV429359**
NSX400...630/NSX400...630 / 630 A	**LV432619**	**LV432620**

Db403921.eps

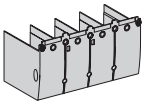

Long terminal shields (1 piece)

	3/4P
NSX100...250 long terminal shield	**LV429518**
NSX400...630 Long terminal shield, 45 mm (1 piece)	**LV432594**
Long terminal shield for spreaders, 52.5 mm (1 piece)	**LV432596**

Terminal extensions

DB115652.eps

Spreaders	52.5 mm	4P	**LV432491**

Typical composition of remote controlled source changeover

Remote controlled source changeover

DB413426.eps

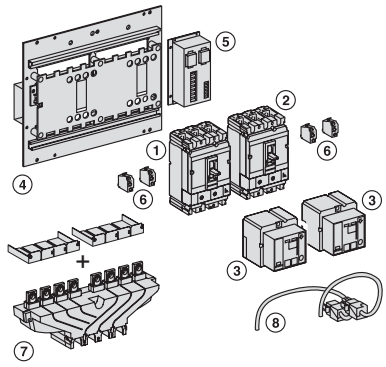

1 normal device N (1)
+ 1 replacement device R (2)
+ 2 remote controls (3)
+ 1 plate with interlocking (4) with IVE (5) and its wiring (8)
+ 2 plug-in kits (if plug-in version)
+ 1 adaptor kit for NSX100...250 plug-in (if NSX400...630 with NSX100...250)
+ auxilary switches (6)
2 x (1 OF + 1 SDE) for Compact NSX100...630
+ 1 downstream coupling accessory (7) for Compact NSX100...630 (option)
+ long RC (if back connection)

IVE voltages and remote controls are identical.

Associated control unit

DB403059.eps

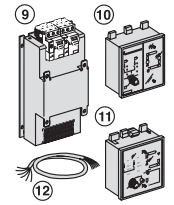

1 source changeover without associated control unit
+ 1 ACP (9) with BA control unit (10)
Or + 1 ACP (9) with UA control unit (11)
Or + 1 ACP (9) with UA150 control unit (11)
+ extension (12) for remote UA/BA connection on front of switchboard

IVE voltages + remote control + ACP + BA or UA are identical.

Source-changeover systems for 2 devices

Compact NS630b to NS1600 circuit breakers and switch-disconnectors

Interlocking for source-changeover systems

Mechanical interlocking

DB404090.eps

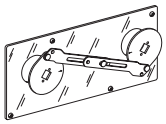

For 2 devices with extended rotary handles	**33890**

Interlocking using connecting rods for Compact electrically-operated devices

DB404091.eps

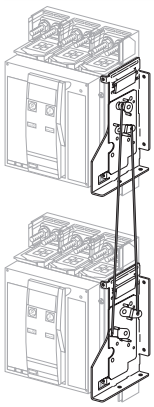

Complete assembly with 2 adaptation fixtures + rods	
2 Compact fixed devices	**33910**
2 Compact withdrawable devices	**33913**

Interlocking using cables for Compact electrically-operated devices

DB404092.eps

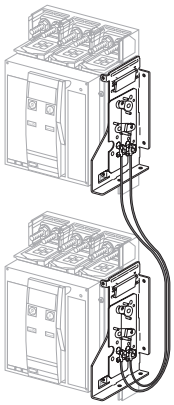

Complete assembly with 2 adaptation fixtures + cables	
2 Compact fixed devices	**33911**
2 Compact withdrawable devices	**33914**
1 Compact fixed + 1 Compact withdrawable device	**33915**

Source-changeover systems for 2 devices

Compact NS630b to NS1600 circuit breakers and switch-disconnectors (cont.)

Associated controller

The automatic-control option includes:
- an IVE electrical-interlocking unit
- an ACP control plate
- a BA or UA controller, depending on the required functions
- a UA/BA adapter kit.

Note: *the circuit breaker auxiliaries (MCH, MX, XF) and the automatic-control components (IVE, ACP, UA or BA) must have the same voltages.*

DB404093.eps

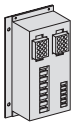

IVE electrical-interlocking unit	24 to 250 V DC	48/415 V AC 50/60 Hz 440 V 60 Hz
For 2 devices	**29356**	**29352**
Wiring kit for connection of 2 fixed/withdrawable devices to the IVE unit		**54655**

DB404087.eps

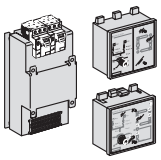

Control unit option		110/127 V AC 50/60 Hz	220/240 V AC 50/60 Hz	380/415 V AC 50/60 Hz 440 V 60 Hz
ACP + controller BA [(1)]			**29470**	**29471**
	Plate ACP		**29363**	**29364**
	Controller BA		**29376**	**29377**
ACP + controller UA [(1)]		**29448**	**29472**	**29473**
	Plate ACP	**29447**	**29363**	**29364**
	Controller UA	**29446**	**29378**	**29380**
ACP + controller UA150 [(1)] (communication option)			**29474**	**29475**
	Plate ACP		**29363**	**29364**
	Controller UA150		**29379**	**29381**

(1) *The supply voltages of the UA/BA controller, ACP plate, IVE unit and circuit breaker operating mechanism must be identical whatever the type of source-changeover system.*

Source-changeover systems for 2 devices

Masterpact NT circuit breakers and switch-disconnectors

Interlocking for source-changeover systems

Interlocking using connecting rods

DB404094.eps

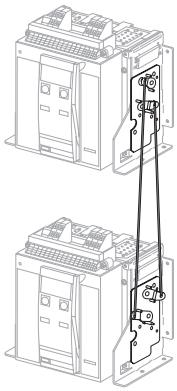

Complete assembly with 2 adaptation fixtures + rods	
2 Masterpact NT fixed devices	**33912**
2 Masterpact NT drawout devices	**33913**

Interlocking using cables (*)

Choose 2 adaptation fixtures (1 for each breaker + 1 set of cables)	
1 adaptation fixture for Masterpact NT fixed devices	**33200**
1 adaptation fixture for Masterpact NT drawout devices	**33201**
1 set of 2 cables	**33209**

(*) Can be used with any combination of NT or NW, fixed or drawout devices.

Associated controller

The automatic-control option includes:
- an IVE electrical-interlocking unit
- an ACP control plate
- a BA or UA controller, depending on the required functions
- a UA/BA adapter kit.

***Note:** the circuit breaker auxiliaries (MCH, MX, XF) and the automatic-control components (IVE, ACP, UA or BA) must have the same voltages.*

DB404093.eps

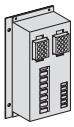

IVE electrical-interlocking unit	24 to 250 V DC	48/415 V AC 50/60 Hz 440 V 60 Hz
For 2 devices	**29356**	**29352**
Wiring kit for connection of 2 fixed/drawout devices to the IVE unit		**54655**

DB404087.eps

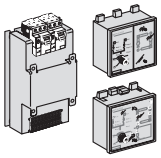

Control unit option		110/127 V AC 50/60 Hz	220/240 V AC 50/60 Hz	380/415 V AC 50/60 Hz 440 V 60 Hz
ACP + controller BA (1)			**29470**	**29471**
	Plate ACP		**29363**	**29364**
	Controller BA		**29376**	**29377**
ACP + controller UA (1)		**29448**	**29472**	**29473**
	Plate ACP	**29447**	**29363**	**29364**
	Controller UA	**29446**	**29378**	**29380**
ACP + controller UA150 (1) (communication option)			**29474**	**29475**
	Plate ACP		**29363**	**29364**
	Controller UA150		**29379**	**29381**

(1) The supply voltages of the UA/BA controller, ACP plate, IVE unit and circuit breaker operating mechanism must be identical whatever the type of source-changeover system.

Source-changeover systems for 2 or 3 devices

Masterpact NW circuit breakers and switch-disconnectors

Interlocking for source-changeover systems for 2 devices

Interlocking of 2 devices using connecting rods

DB404095.eps

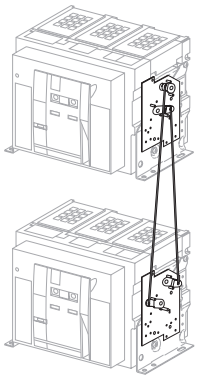

Complete assembly with 2 adaptation fixtures + rods	
2 Masterpact NW fixed devices	**48612**
2 Masterpact NW drawout devices	**48612**

Can be used with 1 NW fixed + 1 NW drawout.

Interlocking of 2 devices using cables (*)

Choose 2 adaptation fixtures (1 for each breaker + 1 set of cables)	
1 adaptation fixture for Masterpact NW fixed devices	**47926**
1 adaptation fixture for Masterpact NW drawout devices	**47926**
1 set of 2 cables	**33209**

(*) Can be used with any combination of NT or NW, fixed or drawout devices.

Associated controller for 2 devices

The automatic-control option includes:
- an IVE electrical-interlocking unit
- an ACP control plate
- a BA or UA controller, depending on the required functions
- a UA/BA adapter kit.

***Note:** the circuit breaker auxiliaries (MCH, MX, XF) and the automatic-control components (IVE, ACP, UA or BA) must have the same voltages.*

DB404093.eps

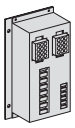

IVE electrical-interlocking unit	24 to 250 V DC	48/415 V AC 50/60 Hz 440 V 60 Hz
For 2 devices	**29356**	**29352**
Wiring kit for connection of 2 fixed/drawout devices to the IVE unit		**54655**

DB404087.eps

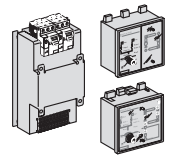

Control unit option	110/127 V AC 50/60 Hz	220/240 V AC 50/60 Hz	380/415 V AC 50/60 Hz 440 V 60 Hz
ACP + controller BA (1)		**29470**	**29471**
Plate ACP		**29363**	**29364**
Controller BA		**29376**	**29377**
ACP + controller UA (1)	**29448**	**29472**	**29473**
Plate ACP	**29447**	**29363**	**29364**
Controller UA	**29446**	**29378**	**29380**
ACP + controller UA150 (1) (communication option)		**29474**	**29475**
Plate ACP		**29363**	**29364**
Controller UA150		**29379**	**29381**

(1) The supply voltages of the UA/BA controller, ACP plate, IVE unit and circuit breaker operating mechanism must be identical whatever the type of source-changeover system.

Source-changeover systems for 2 or 3 devices

Masterpact NW circuit breakers and switch-disconnectors

Interlocking for source-changeover systems for 3 devices

Interlocking of 3 devices using cables

Choose 3 adaptation fixtures (1 complete set with 3 adaptation fixtures + cables)	
3 sources, only 1 device closed, fixed or drawout devices	**48610**
2 sources, 1 coupling, fixed or drawout devices	**48609**
2 normal, 1 replacement source, fixed or drawout devices	**48608**

Source-changeover systems for 2 devices

Compact INS40 to INS630 Switch-disconnectors

To indicate your choices, check the applicable square boxes ☐ and enter the appropriate information in the rectangles ☐.

Mechanical interlocking of two INS40 to INS630 devices				
Devices with front rotary handles, mounted side by side				
	Two devices with direct rotary handles			
	INS250	☐	INS320/400/500/630	☐
	Two devices with extended rotary handles			
	INS40/63/80	☐	INS100/125/160	☐
	INS250	☐	INS320/400/500/630	☐
Downstream coupling accessory	INS250	☐	INS320/400/500/630	☐
Long terminal shields	INS250	☐	INS320/400/500/630	☐
Complete source-changeover assembly				
	INS250-100 A	☐	INS250-160 A	☐
	INS250-200 A	☐	INS250-250 A	☐
	INS320	☐	INS400	☐
	INS500	☐	INS630	☐

Source-changeover systems for 2 devices

Compact INS40 to INS630 Switch-disconnectors

To indicate your choices, check the applicable square boxes ☐ and enter the appropriate information in the rectangles ☐.
(one sheet per device, make copies if necessary)

Device identification:

Q 1 - NORMAL SOURCE ☐

Q 2 - REPLACEMENT SOURCE ☐

Switch-disconnector

Compact type	**INS40/63/80**	☐
	INS100/125/160	☐
	INS250	☐
	INS320/400/500/630	☐
Rating	**A**	☐
Number of poles	**3 or 4**	☐

Connections

Front connection	Standard		
Rear connection	2 short ☐	2 long	☐
INS40/80 connectors	Distribution 3x16□ rigid/10□ flexible		☐
INS100/160 connectors	Snap-on ≤ 95□		☐
	Distribution 4x25□ rigid/16□ flexible		☐
INS250 connectors	Snap-on 1.5□ to 95□ (< 160 A)		☐
	Snap-on 10□ to 185□ (< 250 A)		☐
	Voltage tap connector for 185□ connector		☐
	Clips for connectors	Set of 10	☐
	Distribution 6x1.5□ to 35□ rigid with interphase barriers		☐
INS320/630 connectors	1 cable 35□ to 300□		☐
	2 cables 35□ to 240□		☐
	Voltage tap connector for 185□ connector		☐
Distribution blocks	Linergy DX		
	4P 125 A ☐	160 A ☐	
	1P	160 A ☐	
	Linergy BS (multi stage)	160 A ☐	250 A ☐
	Linergy DP		250 A ☐
Rt-angle extension	Set of 3 or 4	250 A ☐	630 A ☐
Straight extension	INS250		☐
Edgewise ext.	INS630		☐
Spreader	INS250 (45 mm)		☐
	Front alignment base		☐
	INS320/630	52.5 mm ☐	70 mm ☐
	One-piece	INS250 ☐	INS630 ☐
Cu cable lugs supplied with 2 or 3 inter-phase barriers	INS100/160	For 95□ cable	☐
	INS250	For 120□ cable	☐
		For 150□ cable	☐
		For 185□ cable	☐
	INS320/630	For 240□ cable	☐
		For 300□ cable	☐
Al cable lugs supplied with 2 or 3 inter-phase barriers	INS250	For 150□ cable	☐
		For 185□ cable	☐
	INS320/630	For 240□ cable	☐
		For 300□ cable	☐
Terminal shrouds	INS40/63/80 ☐	INS100/125/160	☐
Terminal shields	INS40/63/80 ☐	INS100/125/160	☐
	INS250	Long	☐
	INS320/630	Long	☐
	Long for 52.5 mm spreaders		☐
Interphase barriers	INS100/160	Set of 6	☐
	INS250	Set of 6	☐
	INS320/630	Set of 6	☐

Indication and measurements

4P ammeter module	For INS250	Rating	100 A	☐
			150 A	☐
			250 A	☐
	Adaptation kit required for direct handles			☐
	For INS320/630	Rating	400 A	☐
			600 A	☐
4P current-transformer module	For INS250	Rating	100 A	☐
			150 A	☐
			250 A	☐
	For INS320/630	Rating	400 A	☐
			600 A	☐
Auxiliary contact	For INS40/160	1OF/CAF/CAO	Standard	☐
			Low level	☐
	For INS250/630	1 OF/CAM	Standard	☐
			Low level	☐

Rotary handles

Extended front handles	INS40 to INS160	Black ☐	Red on yellow front	☐
	INS250	Black ☐	Red on yellow front	☐
	INS320 to INS630	Black ☐	Red on yellow front	☐
	For complete changeover assembly		INS250	☐
			INS320/630	☐

Locking of rotary handles

Padlocking	1 to 3 padlocks (in OFF position)		☐
Keylocking	Keylock adapter (keylock not included)		☐
	Keylocks Ronis 1351B.500	☐ Profalux KS5 B24 D4Z	☐

Installation accessories

Front-panel escutcheon	For switch-disconnectors	☐
	For ammeter module, IP40	☐

Source-changeover systems for 2 devices

Compact NSX100 to NSX630 / Circuit breakers and switch-disconnectors

To indicate your choices, check the applicable square boxes ☐ and enter the appropriate information in the rectangles ☐.

Diagram for two Compact NSX devices		
Without automatic control, without emergency off auxiliaries	(no. 51201177)	☐
Without automatic control, with emergency off by MN	(no. 51201178)	☐
Without automatic control, with emergency off by MX	(no. 51201179)	☐

Mechanical interlocking of two NSX100 to NSX630 devices

(fixed, plug-in or withdrawable)

Manually operated devices, mounted side by side:

Two devices with toggles	☐
Two devices with rotary handles	☐

Mechanical and electrical interlocking of two NSX100 to NSX630 devices

(fixed or plug-in)

Electrically operated devices, mounted side by side:

Select 1 base plate + IVE unit, the 4 auxiliary contacts and the options / accessories

Base plate + IVE unit	Identical voltages:		48 to 415 V AC 50/60 Hz	
	24 to 250 V DC	☐	440/480 V AC 60 Hz	☐
	“Normal” NSX100/250	☐	“Replacement” NSX100/250	☐
	“Normal” NSX400/630	☐	“Replacement” NSX400/630	☐
	“Normal” NSX400/630	☐	“Replacement” NSX100/250	☐
	Adapter kit for NSX400/630 with NSX100/250 (plug-in)			☐
Auxiliary contacts	2 OF + 2 SDE (mandatory)		Quantity	4
Options	Long rear connections		Plug-in base	☐
Downstream coupling accessory	3P	☐	NSX100/250	☐
	4P	☐	NSX400/630	☐
Prefabricated wiring	Between device and IVE		Quantity	☐

Automatic-control option

Power supply 220/240 V - 50/60 Hz:	ACP + BA controller	☐
	ACP + UA controller	☐
	ACP + UA150 controller	☐
Power supply 380/415 V - 50/60 Hz and 440 V - 60 Hz:	ACP + BA controller	☐
	ACP + UA controller	☐
	ACP + UA150 controller	☐

Source-changeover systems for 2 devices

Compact NSX100 to NSX630 / Circuit breakers and switch-disconnectors

(One sheet per device, make copies if necessary)

Name of customer:

Address for delivery:

Requested delivery date:

Customer order no.:

To indicate your choices, check the applicable square boxes and enter the appropriate information in the rectangles

Q 1 - NORMAL SOURCE

Q 2 - REPLACEMENT SOURCE

Circuit breaker or switch disconnector

Compact type	**NSX100/160/250**		**NSX400/630**
Rating	**A**		
Circuit breaker	**B, F, N, H, S, L**		
Switch-discon.	**NA**		
No. of poles	**2, 3 or 4**		
No. of poles protected	**2d, 3d or 4d**		
Fixed device		Front connections	
Plug-in/withdr.	Plug-in	Withdrawable	
Earth-leakage protection	**ME, MH, MB**		
Vigi module	Voltage	**V**	
	4P option on 3P NSX		

Trip unit

Thermal-mag.	**TMD** rating (16 … 250 A)	
	TMG rating (16 … 63 A)	
	MA rating (2.5 … 220 A)	
Electronic	**Micrologic 2.2**	**Micrologic 2.3**
	Micrologic 2.2 G	**Micrologic 2.3 AB**
	Micrologic 2.2 AB	**Micrologic 5.3 A**
	Micrologic 5.2 A	**Micrologic 5.3 E**
	Micrologic 5.2 E	**Micrologic 5.3 A-Z**
	Micrologic 5.2 A-Z	**Micrologic 6.3 A**
	Micrologic 6.2 A	**Micrologic 6.3 E**
	Micrologic 6.2 E	**Micrologic 1.3 M**
	Micrologic 2.2 M	**Micrologic 2.3 M**
	Micrologic 6.2 E-M	**Micrologic 6.3 E-M**
	SDTAM module	

External neutral CT		
24 V DC power supply connector		
ZSI wiring accessory for NS630b NW/NT		
External power supply module 24 V DC	24-30 V DC	48-60 V DC
	100-125 V AC	110-130 V AC
	200-240 V AC	380-415 V AC
Battery module		

Connection

Rear-connection kit	Short	Long
	Mixed	
NSX100/250 connectors	Snap-on 1.5□ to 95□ (< 160 A)	
	Snap-on 25□ to 95□ (< 250 A)	
	Snap-on 120□ to 185□ (< 250 A)	
	Distribution 6 x 1.5□ to 35□	
	Aluminium 2 cables 50□ to 120□	
NSX400/630 connectors	1 cable 35□ to 300□	
	2 cables 35□ to 240□	
Right-angle terminal extensions		
Straight extensions	NSX100/250	
Edgewise extensions	45° term. ext.	Dbl.-L term. ext.
Spreader	NSX100/250 (one piece)	(45 mm)
	NSX400/630 (52.5 mm)	(70 mm)
Cu cable lugs	NSX100/250 120□	150□ 185□
	NSX400/630	240□ 300□
Al cable lugs	NSX100/250	150□ 185□
	NSX400/630	240□ 300□
V mesrt Input for connector	For lugs NSX100/250 ≤ 185□	
	For lugs NSX400/630	
Terminal shields	NSX100/250	Long
	NSX400/630	Long
	Long for 52.5 mm spreaders	
Interphase barriers		Set of 6
2 insulating scrn.	NSX100/250	NSX400/630 70 pitch

Test tool

Pocket battery for Micrologic
Maintenance case
USB maintenance interface
Power supply 110-240 V AC
Spare Micrologic cord

Indication and measurement

Ammeter module	Standard	3P	4P
	I max	3P	
Current-transformer module		3P	4P
Current-transformer module + TCU		3P	4P
Insulation-monitoring module		3P	4P
Voltage-presence indicator			
Auxiliary contact	OF / SD / SDE	SDV	Standard
	OF / SD / SDE	SDV	Low level
SDE adapter (TM, MA or Micrologic 2 trip units)			
SDX module			

Remote operation

Electrical operation	Motor mechanism	AC	DC	**V**
Voltage releases	Instantaneous MX	AC	DC	**V**
	Instantaneous MN	AC	DC	**V**
	Fixed time delay MN	AC	DC	**V**
	Adjust. time delay MN	AC	DC	**V**

Rotary handles

Direct	Black	Red and yellow front
	MCC conversion access.	CNOMO conversion access.
Extended	Black	Red and yellow front
	Telescopic handle for withdrawable device	
Indication auxiliary	1 early-break switch	2 early-make switches

Locking

Toggle (1 to 3 padlocks)	Removable	Fixed
Rotary handle	Keylock adapter (keylock not included)	
	Keylocks Ronis 1351B.500	Profalux KS5 B24 D4Z
Motor mechanism	Keylock adapter + keylock Ronis (special)	NSX100/250
	Keylock adapter (keylock not included)	NSX400/630
	Keylocks Ronis 1351B.500	Profalux KS5 B24 D4Z

Interlocking

Mechanical	Toggle operated	Rotary Handle
By key (2 keylocks, 1 key) for rotary handle	Locking kit without locks	
	Keylocks Ronis 1351B.500	Profalux KS5 B24 D4Z

Installation accessories

IP30 escutcheon for all types (toggle/rotary handle/motor mechanism)
IP30 escutcheon (with access to toggle + trip unit)
IP30 escutcheon for Vigi module
IP40 escutcheon for all types (toggle/rotary handle/motor mechanism)
IP40 escutcheon for Vigi module
IP40 escutcheon for Vigi or ammeter module
Toggle cover
Sealing accessories
DIN rail adapter
3P 60 mm busbar adapter

Plug-in / withdrawable configuration accessories

Auxiliary connections	1 automatic connector fixed part with 9 wires (for base)		
	1 automatic connector moving part with 9 wires (for circuit breaker)		
	1 sup. for 3 auto. conn. moving parts		1 sup. for 2 auto. conn.
	9-wire manual auxiliary connector (fixed + moving)		
Plug-in base accessories	Long insulated terminals		Set of 2
	2 IP4 shutters for base		
Chassis accessories	Escutcheon collar	Toggle	Vigi
	Locking kit (keylock not included)		
	2 carriage switches (conn./disconnected position indication)		
Parts or plug-in Withdrawable kits	Plug-in base FC/RC 2P	3P	4P
	Set of two power connections	Standard	Vigi
	Safety trip for advanced opening		
	For 3P/4P chassis		Moving part
			Fixed part
Adaptater for plug-in base (for terminal shield or interphase barriers)			

Communication

	NSX Cord L = 0.35 m	NSX Cord L = 1.3 m
	NSX Cord U > 480 V AC L = 0.35 m	NSX Cord L = 3 m
BSCM (NSX400/630)		
Communicating motor mechanism 220-240 V		
Switchboard front display module FDM121		
FDM mounting accessory		
Modbus interface		
Stacking accessory		
ULP line termination		
RJ45 connectors female/female	Wire length RJ45 L = 0.3 m	Wire length RJ45 L = 0.6 m
	Wire length RJ45 L = 1 m	Wire length RJ45 L = 2 m
	Wire length RJ45 L = 3 m	Wire length RJ45 L = 5 m

Source-changeover systems for 2 devices

Compact NS630b to NS1600 / Circuit breakers and switch-disconnectors

To indicate your choices, check the applicable square boxes ☐ and enter the appropriate information in the rectangles ☐.

Diagram for two Compact NS devices

Electrical interlocking with lockout after fault:

Permanent replacement source (with IVE unit)	(no. 51201183)	☐
With emergency off by MX (with IVE unit)	(no. 51201184)	☐
With emergency off by MN (with IVE unit)	(no. 51201185)	☐

Interlocking using connecting rods between two NS630b to NS1600 devices

Manually operated devices installed side-by-side:

	For two fixed NS devices with extended rotary handles	☐

Electrically operated devices installed one above the other:

Select a complete set including two adaptation fixtures and the connecting rods

Complete set for:	2 fixed NS devices	☐
	2 withdrawable NS devices	☐

Interlocking using cables between two NS630b to NS1600 devices

Electrically operated devices installed one above the other or side-by-side:

Select a complete set including two adaptation fixtures and the cables

Complete set for:	2 fixed NS devices	☐
	2 withdrawable NS devices	☐
	1 fixed NS device + 1 withdrawable NS device	☐

Electrical interlocking between two NS630b to NS1600 devices

1 IVE unit 48/415 V - 50/60 Hz and 440 V - 60 Hz	☐
1 wiring kit for connection between 2 fixed / withdrawable devices to the IVE unit	☐

Automatic-control option

Power supply 110 V - 50/60 Hz:	ACP + BA controller	☐
	ACP + UA controller	☐
	ACP + UA150 controller	☐
Power supply 220/240 V - 50/60 Hz:	ACP + BA controller	☐
	ACP + UA controller	☐
	ACP + UA150 controller	☐
Power supply 380/415 V - 50/60 Hz and 440 V - 60 Hz:	ACP + BA controller	☐
	ACP + UA controller	☐
	ACP + UA150 controller	☐

Source-changeover systems for 2 devices

Compact NS630b to NS1600 / Circuit breakers and switch-disconnectors

(One sheet per device, make copies if necessary)

Name of customer:

Address for delivery:

Requested delivery date:

Customer order no.:

To indicate your choices, check the applicable square boxes and enter the appropriate information in the rectangles

Device identification:

Q 1 - NORMAL SOURCE

Q 2 - REPLACEMENT SOURCE

Circuit breaker or switch disconnector

Compact type	**NS630b to NS1600**	
Rating	**A**	
Circuit breaker	**N, H, L**	
Switch-disconnector	**NA**	
Number of poles	**3 or 4**	
Device	Fixed	
	Withdr. with chassis	
	Withdr. without chassis (moving part only)	
Chassis alone without connections		

Micrologic control unit

Basic protection	**2.0**		**5.0**		**6.0**			
A - ammeter	**2.0**		**5.0**		**6.0**		**7.0**	
E - energy meter	**2.0**		**5.0**		**6.0**			
P - power meter			**5.0**		**6.0**		**7.0**	

AD - external power-supply module	V	
TCE - external sensor (CT) for neutral protection		
Rectangular sensor	280 x 115 mm	
TCW - external sensor for SGR protection		
LR - long-time rating plug	Standard 0.4 to 1 Ir	
	Low setting 0.4 to 0.8 Ir	
	High setting 0.8 to 1 Ir	
	LT OFF	

Communication

Eco COM module Modbus	Device		Chassis	
Front Display Module (FDM121)			Mounting accessory	
Breaker ULP cord	L = 0.35 m			
	L = 1.3 m			
	L = 3 m			

Connections

Horizontal rear connections	Top		Bottom	
Vertical rear connections	Top		Bottom	
Front connections	Top		Bottom	
4x240² bare cable connectors + shields	NS - FC fixed			
Long connection shields	NS - FC fixed			
Vertical-connection adapters	NS - FC fixed, withdr.			
Cable-lug adapters	NS - FC fixed, withdr.			
Arc chute screen	NS - FC fixed			
Interphase barriers	NS - FC fixed, withdr.			
Spreaders	NS - FC fixed, withdr.			
VO - safety shutters on chassis	NS - FC fixed			

Indication contacts

SD trip indication (maximum 1)				
	6 A-240 V AC		Low level	
SDE fault-trip indication (maximum 1) (SDE integrated in electrically operated devices)				
	6 A-240 V AC		Low level	
OF ON/OFF indication contacts (maximum 3)				
	6 A-240 V AC	qty	Low level	qty
Carriage switches (possible combinations: 3 CE, 2 CD, 1 CT)				
CE - "connected" position	6 A-240 V AC	qty	Low level	qty
CD - "disconnected" position	6 A-240 V AC	qty	Low level	qty
CT - "test" position	6 A-240 V AC	qty	Low level	qty
Auxiliary terminals for chassis alone			Jumpers (set of 10)	
	3-wire terminal (30 parts)		6-wire terminal (10 parts)	

Remote operation

Electrical operation	Standard				Communicating	
	Power supply	AC		DC	**V**	
Voltage releases	MX	AC		DC	**V**	
	MN	AC		DC	**V**	
	MN delay unit			Adjustable	Non-adjustable	

Rotary handles for fixed and withdrawable device

Direct	Black		Red on yellow front	
			CNOMO conversion access.	
Extended	Black		Red on yellow front	
	Telescopic handle for withdrawable device			
Indication auxiliary	6 A-240 V AC		2 early-make switches	
			2 early-break switches	

Locking

Toggle (1 to 3 padlocks)	Removable system		Fixed system		
Rotary handle using a keylock	OFF position		ON and OFF positions		
	Ronis 1351B.500		Profalux KS5 B24 D4Z		
	Keylock kit (without keylock)				
For electrically operated devices	**VBP** - ON/OFF pushbutton locking				
	OFF position locking:				
	VCPO - by padlocks				
	VSPO - by keylocks				
	Keylock kit (w/o keylock)		Profalux		Ronis
	1 keylock		Profalux		Ronis
	2 identical keylocks, 1 key		Profalux		Ronis
Chassis locking in "disconnected" position:					
VSPD - by keylocks	Keylock kit (w/o keylock)		Profalux		Ronis
			Kirk		Castell
	1 keylock		Profalux		Ronis
	2 identical keylocks, 1 key		Profalux		Ronis
	2 keylocks, different keys		Profalux		Ronis
	Optional connected/disconnected/test position locking				
VPEC - door interlock			On right-hand side of chassis		
			On left-hand side of chassis		
VPOC - racking interlock					
VDC - mismatch protection					

Accessories

CDM - mechanical operation counter				
CDP - escutcheon				
CP - transparent cover for escutcheon				
OP - blanking plate for escutcheon				
Mounting brackets for fixed NS			For mounting on horizontal plane	
Test kits	Mini test kit		Portable test kit	

Source-changeover systems for 2 devices

Masterpact NT or NW / Circuit breakers and switch-disconnectors

To indicate your choices, check the applicable square boxes ☐ and enter the appropriate information in the rectangles ☐.

Diagram for 2 Masterpact NT/NW devices

Electrical interlocking with lockout after fault:

Permanent replacement source (with IVE unit)	(no. 51201142)	☐
With emergency off by MX (with IVE unit)	(no. 51201143)	☐
With emergency off by MN (with IVE unit)	(no. 51201144)	☐

Automatic control with lockout after fault:

Permanent replacement source (with IVE unit)	(no. 51156904)	☐
Engine generator set (with IVE unit)	(no. 51156905)	☐

Interlocking using connecting rods (NT/NW devices one above the other)

Select a complete set including two adaptation fixtures and the connecting rods

Complete set for:	2 drawout NT devices	☐	2 fixed NT devices	☐
	2 drawout NW devices	☐	2 fixed NW devices	☐
	1 fixed NT device + 1 fixed NW device			☐
	1 drawout NT device + 1 drawout NW device			☐

Interlocking using cables (NT/NW devices one above the other or side-by-side)

Select two adaptation fixtures (one for each device) and a set of two cables

Adaptation fixture for: (NT/NW fixed and drawout devices may be mixed)	1 fixed NT device	qty	☐
	1 drawout NT device	qty	☐
	1 fixed NW device	qty	☐
	1 drawout NW device	qty	☐
	1 set of 2 cables (for two devices)		☐

Electrical interlocking 2 Masterpact NT/NW devices

1 IVE unit 48/415 V - 50/60 Hz and 440 V - 60 Hz	☐
1 wiring kit for connection between 2 fixed / withdrawable devices to the IVE unit	☐

Automatic-control option

Power supply 220/240 V - 50/60 Hz:	ACP + BA controller	☐
	ACP + UA controller	☐
	ACP + UA150 controller	☐
Power supply 380/415 V - 50/60 Hz and 440 V - 60 Hz:	ACP + BA controller	☐
	ACP + UA controller	☐
	ACP + UA150 controller	☐

Source-changeover systems for 2 devices

Masterpact NT or NW / Circuit breakers and switch-disconnectors

(One sheet per device, make copies if necessary)

Name of customer:

Address for delivery:

Requested delivery date:

Customer order no.:

To indicate your choices, check the applicable square boxes and enter the appropriate information in the rectangles

Device identification:

Q 1 - NORMAL SOURCE

Q 2 - REPLACEMENT SOURCE

Circuit breaker or switch disconnector

Masterpact type	**NT**		**NW**
Rating	**A**		
Sensor rating	**A**		
Circuit breaker	**N1, H1, H2, H3, L1**		
Switch-disconnector	**NA, HA, HF, ES, HA10 (NW)**		
Number of poles	**3 or 4**		
Option: neutral on right side			
Device	Fixed		
	Withdr. with chassis		
	Withdr. without chassis (moving part only)		
Chassis alone without connections			

Micrologic control unit

A - ammeter	**2.0**	**5.0**	**6.0**	**7.0**
E - energy meter	**2.0**	**5.0**	**6.0**	
P - power meter		**5.0**	**6.0**	**7.0**
H - harmonic meter		**5.0**	**6.0**	**7.0**

AD - external power-supply module		**V**
TCE - external sensor (CT) for neutral protection		
Rectangular sensor for earth-leakage protection	NT (280 x 115 mm)	
	NW (470 x 160 mm)	
LR - long-time rating plug	Standard 0.4 to 1 Ir	
	Low setting 0.4 to 0.8 Ir	
	High setting 0.8 to 1 Ir	
	LT OFF	
PTE - external voltage measurement input (required for reverse supply)		
BAT - battery module		

Communication

Eco COM module Modbus	Device		Chassis
Front Display Module (FDM121)			Mounting accessory
Breaker ULP cord	L = 0.35 m		
	L = 1.3 m		
	L = 3 m		

Connections

Horizontal	Top		Bottom
Vertical	Top		Bottom
Front	Top		Bottom
Vertical-connection adapters	NT - FC fixed, draw.		
Cable-lug adapters	NT - FC fixed, draw.		
Arc chute screen	NT - FC fixed		
Interphase barriers	NT - NW fixed, draw.		
Spreaders	NT fixed, drawout		
Disconnectable front connection adapter	NW fixed		
Lugs for 240□ or 300□ cables	NW fixed, drawout		
VO - safety shutters on chassis	NT, NW		**X**
VIVC - shutter position indication and locking	NW		

Indication contacts

OF - ON/OFF indication contacts			
Standard	4 OF 6 A-240 V AC (10 A-240 V AC and low-level for NW)		
Additional	1 block of 4 OF for NW	max. 2	qty
EF - combined "connected/closed" contacts			
	1 EF 6 A-240 V AC for NW	max. 8	qty
	1 EF low-level for NW	max. 8	qty
SDE - "fault-trip" indication contact			
Standard	1 SDE 6 A-240 V AC		
Additional	1 SDE 6 A-240 V AC		1 SDE Low level
Programmable contacts	2 M2C contacts		6 M6C contacts
Carriage switches	6 A-240 V AC		Low level
CE - "connected" position	max. 3 for NW / NT		qty
CD - "disconnected" position	max. 3 for NW, 2 for NT		qty
CT - "test" position	max. 3 for NW, 1 for NT		qty
AC - NW actuator for 6 CE - 3 CD - 0 CT additional carriage switches			qty

Remote operation

Remote ON/OFF	**MCH -** gear motor		**V**
	XF - closing voltage release		**V**
	MX - opening voltage release		**V**
	PF - "ready to close" contact	Low level	
		6 A-240 V AC	
	BPFE - electrical closing pushbutton		
	Res - electrical reset option		**V**
	RAR - automatic reset option		
Remote tripping	**MN -** undervoltage release		**V**
	R - delay unit (non-adjustable)		
	Rr - adjustable delay unit		
	2nd MX - shunt release		**V**

Locking

VBP - ON/OFF pushbutton locking (by transparent cover + padlocks)			
OFF position locking:			
VCPO - by padlocks			
VSPO - by keylocks	Keylock kit (w/o keylock)	Profalux	Ronis
		Kirk	Castell
	1 keylock	Profalux	Ronis
	2 identical keylocks, 1 key	Profalux	Ronis
	2 keylocks, different keys (NW)	Profalux	Ronis
Chassis locking in "disconnected" position:			
VSPD - by keylocks	Keylock kit (w/o keylock)	Profalux	Ronis
		Kirk	Castell
	1 keylock	Profalux	Ronis
	2 identical keylocks, 1 key	Profalux	Ronis
	2 keylocks, different keys	Profalux	Ronis
	Optional connected/disconnected/test position locking		
VPEC - door interlock		On right-hand side of chassis	
		On left-hand side of chassis	
VPOC - racking interlock			
IPA - cable-type door interlock			
IBPO - racking interlock between crank and OFF pushbutton for NW			
DAE - automatic spring discharge before breaker removal for NW			
VDC - mismatch protection device - chassis			

Accessories

CDM - mechanical operation counter			
CB - auxiliary terminal shield for chassis			
CDP - escutcheon			
CP - transparent cover for escutcheon			
OP - blanking plate for escutcheon			
Brackets for mounting NW fixed			On backplates
Test kits	Mini test kit		Portable test kit

Source-changeover systems for 3 devices

Masterpact NW / Circuit breakers and switch-disconnectors

To indicate your choices, check the applicable square boxes ☐ and enter the appropriate information in the rectangles ☐.

Diagram for 3 Masterpact NW devices		
2 "Normal" sources + 1 "Replacement" source:		
Electrical interlocking without lockout after fault	(no. 51156906)	☐
Electrical interlocking with lockout after fault	(no. 51156907)	☐
2 "Normal" sources + 1 "Replacement" source with source selection:		
Automatic control w/ engine generator set w/o lockout after fault	(no. 51156908)	☐
Automatic control w/ engine generator set w/ lockout after fault	(no. 51156909)	☐
3 sources, only 1 device ON:		
Electrical interlocking without lockout after fault	(no. 51156910)	☐
Electrical interlocking with lockout after fault	(no. 51156911)	☐
2 "Normal" sources + 1 coupling:		
Electrical interlocking without lockout after fault	(no. 51156912)	☐
Electrical interlocking with lockout after fault	(no. 51156913)	☐
Automatic control with lockout after fault:	(no. 51156914)	☐

Interlocking using cables (NW devices one above the other or side-by-side)		
Select a complete set including three adaptation fixtures and the cables		
1 complete set for:	3 sources / 1 device ON, fixed or drawout	☐
	2 sources + 1 coupling, fixed or drawout	☐
	2 sources + 1 replacement source, fixed or drawout	☐

Source-changeover systems for 3 devices

Masterpact NW / Circuit breakers and switch-disconnectors

To indicate your choices, check the applicable square boxes ☐ and enter the appropriate information in the rectangles ▭.
(one sheet per device, make copies if necessary)

Device identification:

Q 1 - NORMAL SOURCE ☐
Q 2 - REPLACEMENT SOURCE ☐

Circuit breaker or switch-disconnector

Masterpact type	**NW**	☐
Rating	**A**	▭
Sensor rating	**A**	▭
Circuit breaker	**N1, H1, H2, H3, L1**	▭
Switch-disconnector	**NA, HA, HF**	▭
Number of poles	**3 or 4**	▭
Option: neutral on right side		☐
Device	Fixed	☐
	Drawout with chassis	☐
	Drawout without chassis (moving part only)	☐
Chassis alone without connections		☐

Micrologic control unit

A - ammeter	**2.0**	☐	**5.0**	☐	**6.0**	☐	**7.0**	☐
E - energy meter	**2.0**	☐	**5.0**	☐	**6.0**			
P - power meter			**5.0**	☐	**6.0**	☐	**7.0**	☐
H - harmonic meter			**5.0**	☐	**6.0**	☐	**7.0**	☐

AD - external power-supply module	**V**	☐
TCE - external sensor (CT) for neutral protection		☐
Rectangular sensor for earth-leakage protection	470 x 160 mm	☐
TCW - external sensor for SGR protection		☐
LR - long-time rating plug	Standard 0.4 to 1 Ir	☐
	Low setting 0.4 to 0.8 Ir	☐
	High setting 0.8 to 1 Ir	☐
	LT OFF	☐
PTE - external voltage measurement input (required for reverse supply)		☐
BAT - battery module		☐

Communication

Eco COM module Modbus	Device	☐	Chassis	☐
Front Display Module (FDM121)		☐	Mounting accessory	☐
Breaker ULP cord	L = 0.35 m	☐		
	L = 1.3 m	☐		
	L = 3 m	☐		

Connections

Horizontal	Top	☐	Bottom	☐
Vertical	Top	☐	Bottom	☐
Front	Top	☐	Bottom	☐
Interphase barriers	Fixed, drawout			☐
Disconnectable front connection adapter	Fixed			☐
VO - safety shutters on chassis				X
VIVC - shutter position indication and locking				☐

Indication contacts

OF - ON/OFF indication contacts

Standard	4 OF 6 A-240 V AC (10 A-240 V AC and low-level)		
Additional	1 block of 4 OF	max. 2	qty ☐

EF - combined "connected/closed" contacts

	1 EF 6 A-240 V AC	max. 8	qty ☐
	1 EF low-level	max. 8	qty ☐

SDE - "fault-trip" indication contact

Standard	1 SDE 6 A-240 V AC			
Additional	1 SDE 6 A-240 V AC	☐	1 SDE Low level	☐
Programmable contacts	2 M2C contacts	☐	6 M6C contacts	☐
Carriage switches	6 A-240 V AC	☐	Low level	☐
CE - "connected" position	Max. 3		qty	☐
CD - "disconnected" position	Max. 3		qty	☐
CT - "test" position	Max. 3		qty	☐
AC - NW actuator for 6 CE - 3 CD - 0 CT additional carriage switches			qty	☐

Remote operation

Remote ON/OFF	**MCH -** gear motor	**V**	☐
	XF - closing voltage release	**V**	☐
	MX - opening voltage release	**V**	☐
	PF - "ready to close" contact	Low level	☐
		6 A-240 V AC	☐
	BPFE - electrical closing pushbutton		☐
	Res - electrical reset option	**V**	☐
	RAR - automatic reset option		☐
Remote tripping	**MN** - undervoltage release	**V**	☐
	R - delay unit (non-adjustable)		☐
	Rr - adjustable delay unit		☐
	2eme MX - shunt release	**V**	☐

Locking

VBP - ON/OFF pushbutton locking (by transparent cover + padlocks)					☐
OFF position locking:					
VCPO - by padlocks					☐
VSPO - by keylocks	Keylock kit (w/o keylock)	Profalux	☐	Ronis	☐
		Kirk	☐	Castell	☐
	1 keylock	Profalux	☐	Ronis	☐
	2 identical keylocks, 1 key	Profalux	☐	Ronis	☐
	2 keylocks, different keys (NW)	Profalux	☐	Ronis	☐
Chassis locking in "disconnected" position:					
VSPD - by keylocks	Keylock kit (w/o keylock)	Profalux	☐	Ronis	☐
		Kirk	☐	Castell	☐
	1 keylock	Profalux	☐	Ronis	☐
	2 identical keylocks, 1 key	Profalux	☐	Ronis	☐
	2 keylocks, different keys	Profalux	☐	Ronis	☐
	Optional connected/disconnected/test position locking				☐
VPEC - door interlock		On right-hand side of chassis			☐
		On left-hand side of chassis			☐
VPOC - racking interlock					☐
IPA - cable-type door interlock					☐
IBPO - racking interlock between crank and OFF pushbutton for NW					☐
DAE - automatic spring discharge before breaker removal for NW					☐
VDC - mismatch protection					☐

Accessories

CDM - mechanical operation counter				☐
CB - auxiliary terminal shield for chassis				☐
CDP - escutcheon				☐
CP - transparent cover for escutcheon				☐
OP - blanking plate for escutcheon				☐
Brackets for mounting NW fixed			On backplates	☐
Test kits	Mini test kit	☐	Portable test kit	☐

Notes

Notes

Notes

Schneider Electric Industries SAS

35, rue Joseph Monier
CS 30323
92506 Rueil Malmaison Cedex
France

RCS Nanterre 954 503 439
Capital social 896 313 776 €
www.schneider-electric.com

As standards, specifications and designs change from time to time, please ask for confirmation of the information given in this publication.

Publication: Schneider Electric Industries SAS

LVPED211022EN● WEB2 cat.2015

© 2015 - Schneider Electric - All rights reserved.