Line Series

Canalis KTC 1000 - 6300 A

Catalogue 2026

Busbar trunking systems
Copper

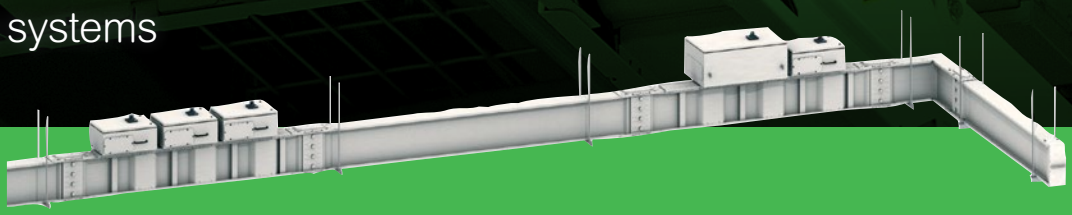

se.com

Life Is On | Schneider Electric

Environmental Data Program

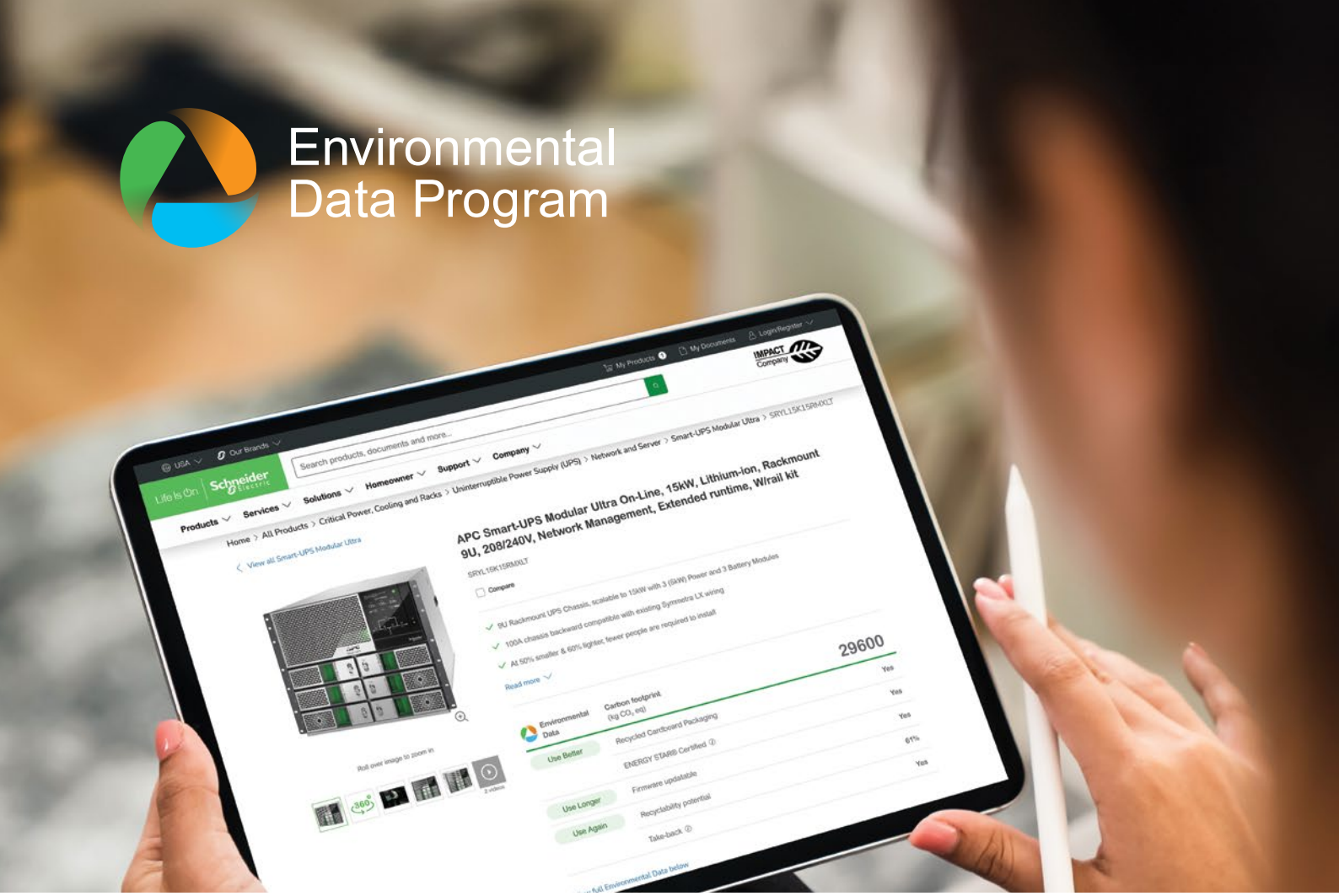

Next-level transparency for better-informed product choices

The Environmental Data Program is a framework for how we measure, categorize, and compare the environmental attributes and footprint of our products.

Using a rigorous, fact-based methodology, the program provides environmental data from across the product lifecycle.

Five data categories across the product lifecycle

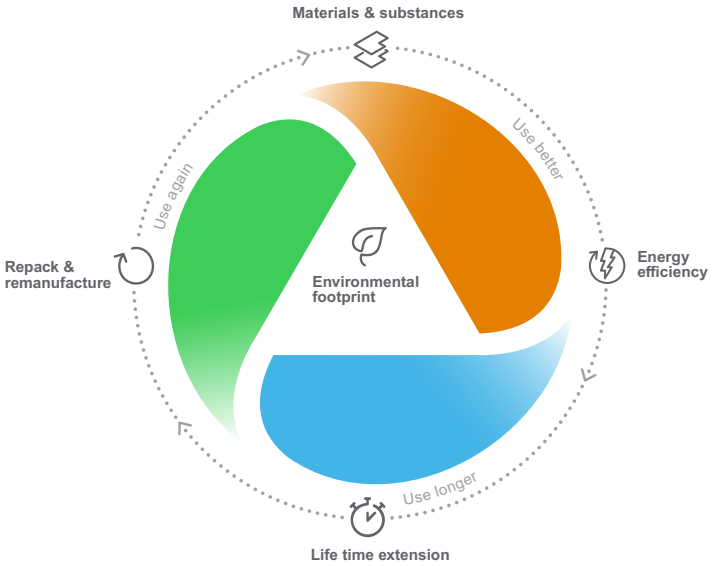

Use Better: How sustainable a product is, including environmental footprint, materials and substances, packaging, and energy efficiency.

Use Longer: How a product's life time can be effectively extended in terms of repairability and updatability.

Use Again: How a product can be reused, from dismantling and remanufacturing to recyclability and manufacturer take back.

With this transparent, verified data, customers and partners are empowered to make conscious environmental choices and accurately evaluate and report on sustainability performance.

All our hardware offers have an associated environmental data available on se.com product pages.

Learn more about the Environmental Data Program

General Contents

Canalis KTC

Introduction A

Presentation and description B

Catalogue numbers and dimensions C

Design guide D

Installation guide E

Recommendations F

Index G

Canalis the ideal offer to match with your needs

P58950-90

+70,000

More than 70,000 km of Canalis busbar trunking has been sold around the world.

A total coordination with the Schneider Electric system

- Canalis is part of a comprehensive offering of Schneider Electric products designed to operate together.
- It guarantees and enhances the safety of people and equipment, and provides installation continuity of service, upgradeability and simplicity.
- This concept covers all low voltage electrical distribution components.
- The result is an optimised electrical installation with even higher performance through full electrical, mechanical and communication compatibility.
- It is perfectly suited to traditional applications (factories, warehouses, etc.)and to the distribution of electrical power from the incoming transformer on through to all types of loads in offices, commercial premises, laboratories, etc.

PD202088-104_r

Canalis KT provides you …

… more flexibility.

… ease of connection with the "plug and play" transformer and switchboard connections.

… more assistance with our teams ready to assist you throughout your project.

Introduction

A Canalis installation for every distribution system

Schneider Electric offers different distribution systems to fit all your operating needs.

DB410747.eps

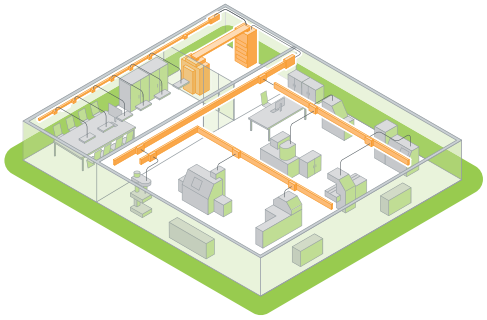

Decentralized distribution

For manufacturing industries

- Mechanical
- Textiles
- Lumber
- Injection moulding
- Electronics
- Pharmaceuticals
- Livestock, etc.

Decentralized distribution lets you

- Design installations without layout details
- Upgrade without shutting down production
- Get systems up and running sooner thanks to faster installation
- Generate savings depending on the number of loads.

DD406503.eps

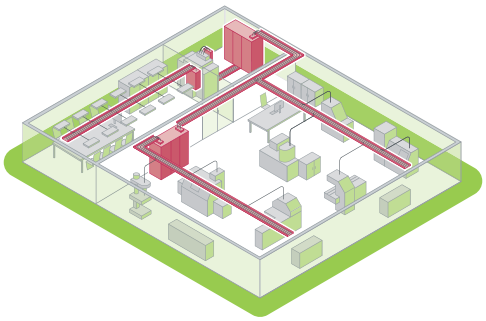

Centralized distribution

For all continuous processes

- Cement plants
- Oil and gas
- Petrochemicals
- Steel
- Paper, etc.

Centralized distribution offers

- Continuity of service
- Combined distribution of power, control and monitoring circuits
- Supervision, etc.

DB410746.eps

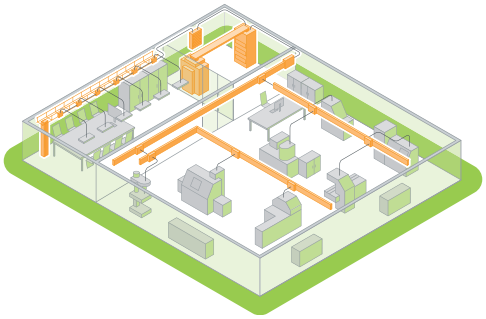

Combined distribution

Where the advantages of both centralized and decentralized distribution are required.

Commercial and service buildings

- Offices
- Stores
- Hospitals
- Exhibition halls, etc.

Infrastructures

- Airports
- Telecommunications
- Internet data centres
- Tunnels, etc.

Industrial facilities

- Pharmaceuticals
- Food processing, etc.

The Canalis decentralized distribution concept

Electrical power available at all points within the installation

Total coordination of the Schneider Electric system provides maximum safety of life and property, continuity of service, upgradeability and ease of installation.

Total coordination is made easy by the tables in the "Design Guide".
They help you choose the right combination of circuit breakers and busbar trunking.

Product characteristics are verified by calculations and tests carried out in our laboratories.

Exclusive features of the Schneider Electric system

A competitive installation

Simplicity, upgradeability, safety and continuity of service and operation.

Savings start as soon as the installation begins. With multiple tap-off points at regular intervals, Canalis busbar trunking reduces installation costs.
Given the low cost of adding new circuits, savings increase as the number of loads increase, a natural consequence of the growth of your business.

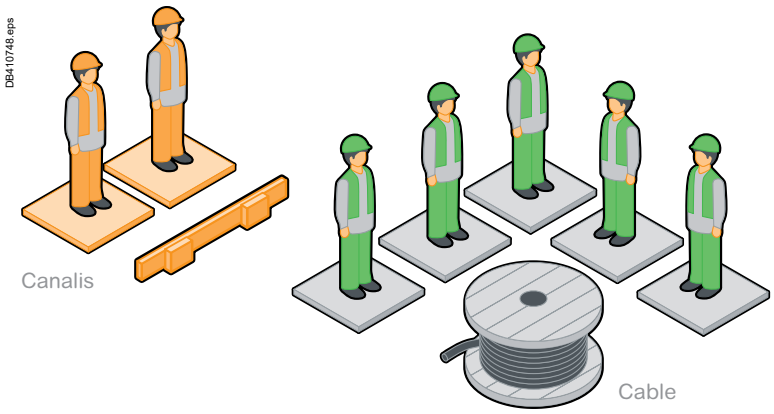

Comparative investment

of 400 A electric power system equipment.

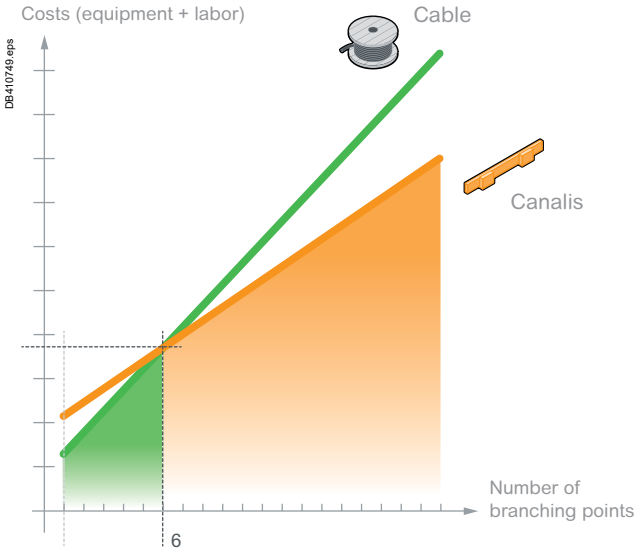

Introduction

The Canalis decentralized distribution concept

Upgradeable during operation

In decentralized distribution, evolving operating requirements and costs are integrated right from the start.

- The addition, relocation or replacement of load equipment can be carried out quickly, without de-energizing the supply trunking or shutting down operation.
- The cost of making such changes is greatly reduced:
- loads are located close to supply points
- tap-off points are always available
- tap-units can be reused or new ones added quickly for load.

DB406501

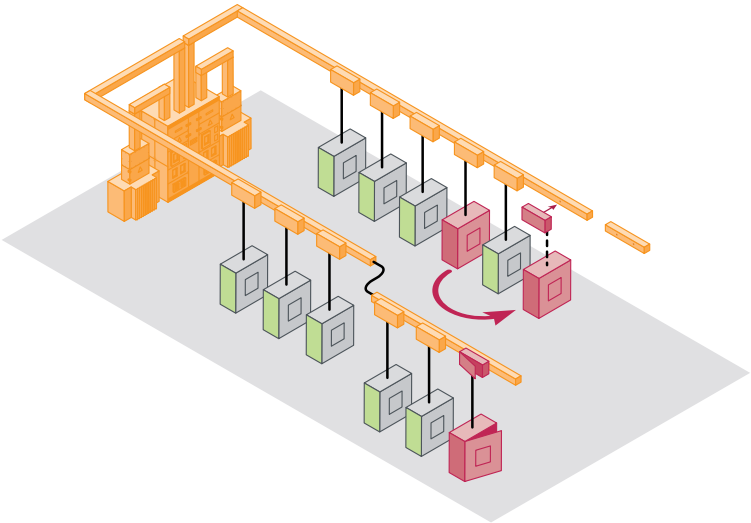

Reusable in the event of major changes

When making major modifications to your installation, the existing trunking can be easily dismantled and reused.

Life Is On Schneider Electric

Product lifecycle

Power distribution is a major challenge in the construction and refurbishment of commercial, industrial buildings and data centers.

The choice of device is fundamental as it will have an effect on the building's lifecycle. Infrastructures must comply with existing requirements while being flexible, networked and smart. The Canalis concept is undoubtedly the best solution to meet the needs of today and the challenges of tomorrow.

Simple to estimate

Designing Canalis installations is straightforward as there is no need to know the exact location, nor the power rating of the loads to be supplied.

It is therefore very quick to cost the distribution functions. Moreover, Canalis's flexibility means you can invest in existing needs without adversely affecting future expansion.

Practical to recycle

Over the last 20 years, recycling has become a major challenge for industry.
The composition of Canalis ranges **guarantees a 95% recycling rate.** But the Canalis offers go one better… if a site is being restructured or enlarged, **the products can simply be removed and reinstalled in their new environment.**

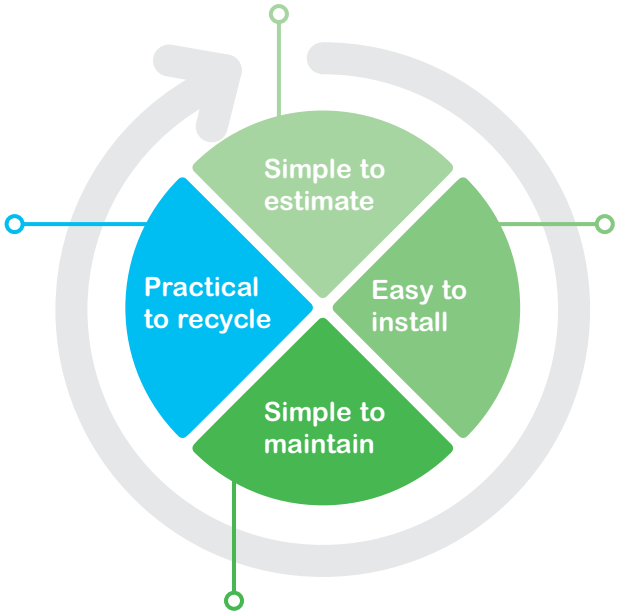

Easy to install

The compact nature of Canalis makes it easy to integrate in all parts of the building.
Since it is based on a decentralized architecture, Canalis can be installed at the same time as the building is being built, which optimizes site construction schedules.
Because of the delayed differentiation linked to the Canalis architecture, new constraints can be taken into account without adding to the installation time.

Controlling costs
The Canalis ranges are factory-tested, which ensures a very high level of quality on site and considerably improves the success of site acceptance tests.

Simple to maintain

- **No maintenance is required on the Canalis electrical contacts.**
- The clarity of the Canalis architecture simplifies building maintenance and upgrades:
  > enlarging office space,
  > adding check-outs in a supermarket…
  Decentralized distribution ensures continuity of service; when associated with a 100% maintained or non-maintained supply, the essential functions are guaranteed:
  > maintaining the cold chain in a hypermarket,
  > lighting system in a car park…

Introduction

Canalis, in total harmony with the environment

Safety of life and property

DD205675_r

With Canalis, no toxic emission in case of fire

The busbar trunking has a low combustible load.Its construction uses very little consumable material and is halogen free. In the event of a fire, the busbar trunking does not emit any gas or toxic smoke.

The busbar trunking helps prevent the propagation of a fire through partition walls and floors.

Halogen-sensitive applications

- Public buildings (infrastructures, hospitals, schools, etc.).
- Buildings with evacuation difficulties (high-rises, ships, etc.) and service-activity buildings.
- Sensitive processes (production of electronic components, etc.).

Canalis contains no PVCs

When PVCs burn, they produce large amounts of smoke that can be a serious safety hazard.

- **Reduced visibility:**
  > risk of panic
  > complicates rescue work.
- **Smoke toxicity:**
  > hydrogen chloride gas (highly toxic)
  > carbon monoxide (danger of asphyxiation).

Example:

Consequences of a fire in a 100 m² office with electrical distribution by cables.
200 kg of cables (i.e. 20 kg of PVC) produces:
- 4400 m³ of smoke.
- 7.5 m³ of hydrochloric acid.
- 3.7 kg of corroded steel.

Health

DD205674

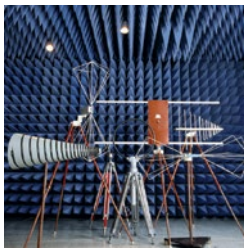

Canalis reduces the risk of exposure to electromagnetic fields

According to the WHO (World Health Organisation), exposure to electromagnetic fields can be a health hazard starting at levels as low as 0.2 micro-Teslas and could represent a long-term risk of cancer. Some countries have created standards that stipulate limits (e.g. 0.2 µT at 1 metre in Sweden).

All electrical conductors generate magnetic fields proportional to the distance between them. The design of Canalis busbar trunking with tightly spaced conductors in a metal enclosure helps to considerably reduce radiated electromagnetic fields.

The electromagnetic field characteristics of Canalis busbar trunking are well-defined and measurements show that they are far below potentially dangerous levels.

You will find the magnetic induction values of our products on the "Characteristics" pages.

Canalis, in total harmony with the environment

Environment

Canalis is fully recyclable

- Canalis busbar trunking can be reused. Canalis busbar trunking is designed for a long service life and can easily be dismantled, cleaned and reused.
- All packaging materials can be recycled (cardboard or recyclable polyethylene film).
- All Canalis products are designed for safe end-of-life recycling. PVC, on the other hand, requires neutralisation of the hydrochloric acid produced using lime and generates dioxins that are extremely toxic.

Example:

1 kg of PVC generates 1 kg of waste.

Canalis helps conserve natural resources

The depletion of raw materials (copper, plastics, etc.) is one of our ongoing concerns. For this reason, we have optimised the used of all materials used to make our busbar trunking.

- Reduction of dangerous or polluting materials. We design our products to meet future European directives.
- Reduction in the weight of insulating materials.
- Reduction in the use of plastics for improved fire performance: less energy released during combustion, thereby limiting propagation and facilitating extinction (lower calorific value).

Conservation of natural resources

Canalis reduces your line losses by 20 %
Canalis divides your consumption of plastic by a factor of four

The cost of an electrical installation includes the initial investment for the equipment and its installation, the cost of maintenance and the cost of energy losses during operation.

The concept of decentralised distribution is a way to merge all the circuits in one and thus to reduce to the maximum the low cross-section lengths and the weight of insulating materials.

Example:

34 m of Canalis KS 250 A trunking equipped with fourteen 4-pole 25 A feeders.

Type of distribution	Insulation	Consumption
DECENTRALISED		
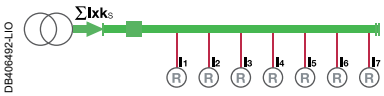	23 kg	1600 Joules
K_S: diversity coefficient = 0.6		
CENTRALISED		
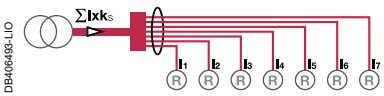	90 kg	2000 Joules
Ks: diversity coefficient = 0.6		

Introduction

Canalis®

From the transport to the distribution...

Canalis is the core of your installation

DB411145

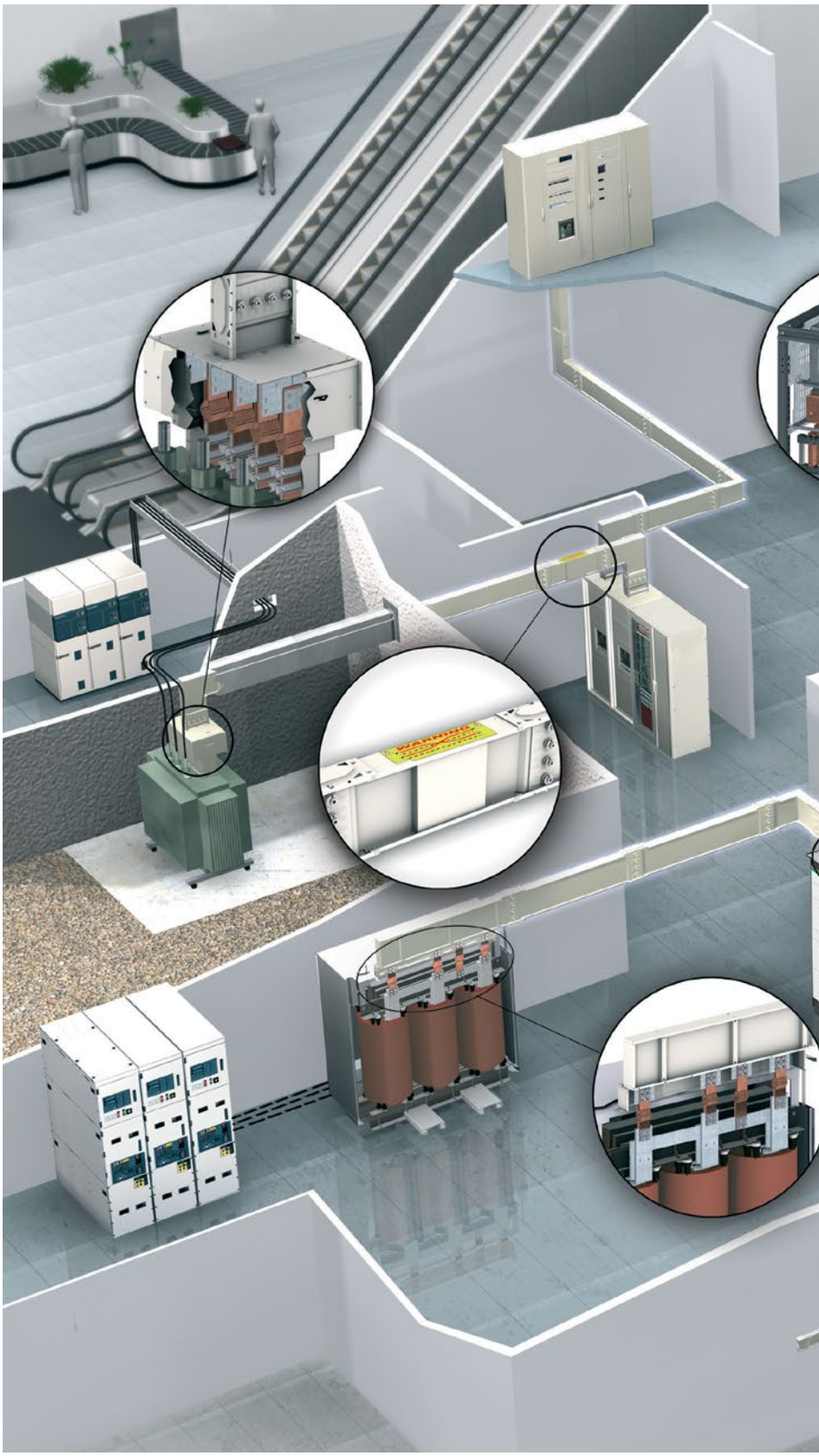

Life Is On Schneider Electric

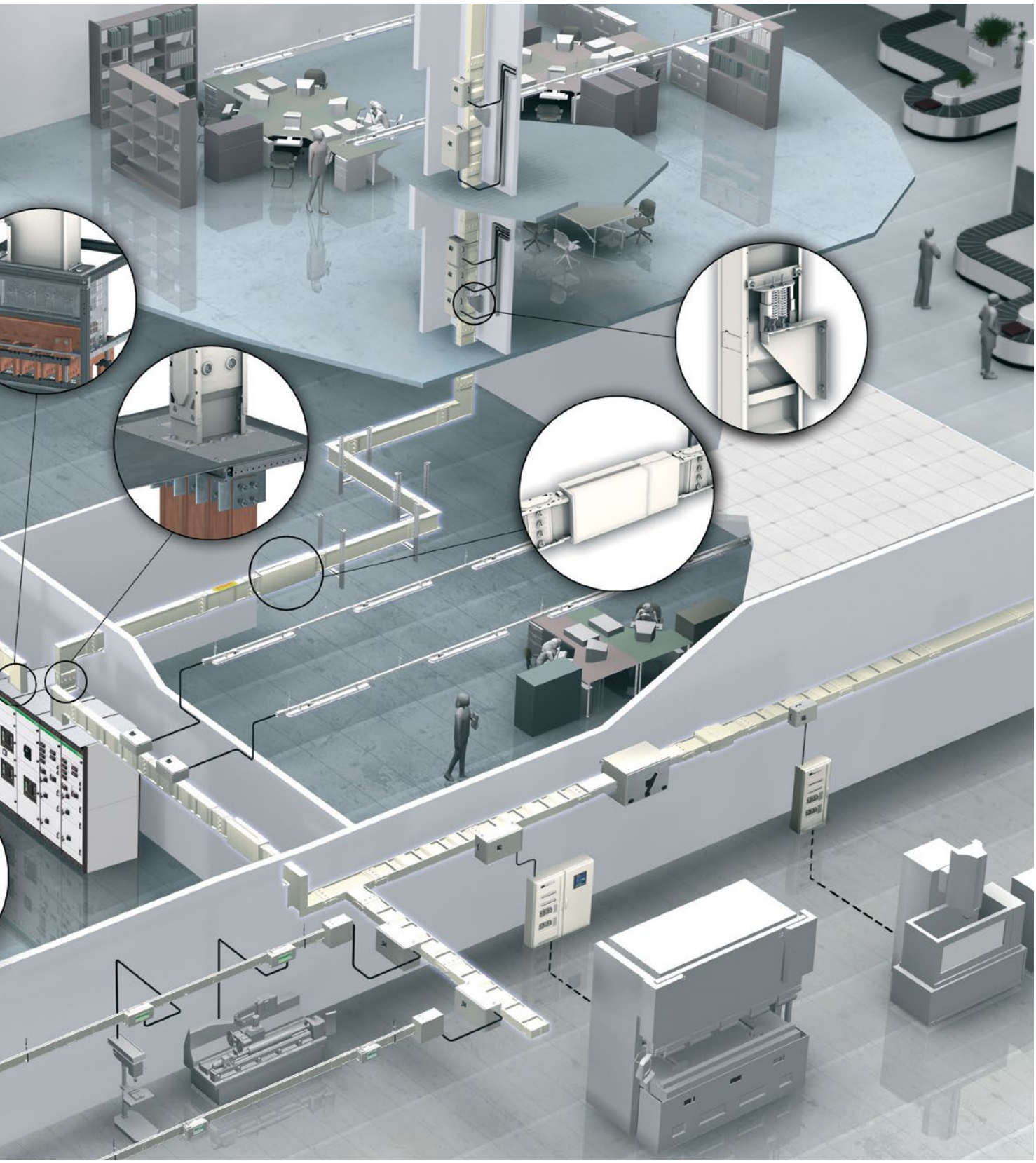

Introduction

Canalis KT, a display of advantages

A compact solution

- The compact size of Canalis KT means it takes up very little space in the building:
  > used as a rising main, it takes up only a minimum of space
  > used for horizontal distribution, it fits easily into the building's structure (false floors, false ceilings, service shafts, etc).
- Changes in direction have been designed to optimise the space taken up, contrary to an equivalent installation using cables which requires large bending radii.
- Tap-off units, complete with protective devices, are fitted along the entire length of the busbar trunking thus reducing the floor area taken up by the electrical distribution switchboards.

A simple and economical system

- The design study is easy to perform as it does not require a detailed layout of each load. Equipment choice is pre-determined and optimised.
- Installing the busbar trunking requires 2 or 3 people only, for a time equivalent to that for installing cableways. The time normally needed for laying cables is therefore saved.
- Connection to the MV/LV substation is made using a quick fitting joint block. The tap-off units can be prepared in the workshop thus reducing on-site time. Their connection to the busbar trunking is done in a single plugging-on operation.
- Installing busbar trunking lengths can be done as and when building work progresses, thus optimising on-site work and allowing possible unexpected events to be anticipated in advance.
- It is also important to note that busbar trunking is a factory tested solution, meaning the time needed for inspecting connections is reduced (visual inspection of tightening torque).

Operating continuity

When working on the electrical installation, the busbar trunking provides immediate readability of the electrical circuit thus allowing the appropriate zone to be quickly identified.

Tap-off units can be plugged-on and off without the need for a shutdown; service continuity is thus irreproachable.

Life Is On Schneider Electric

Canalis KT, a display of advantages

Certified installation

PD202386_68

- Busbar trunking temperature rise and short-circuit withstand are known and independent of the installation. Coordination of the Schneider Electric system results in complete control of the electrical network.
- Installation standards UTE C 15-105 chapter B.6.2 and IEC 60364 chapter 5.523.6 stipulate **that above 4 parallel cables, it is preferable to use busbar trunking.** Paralleling many cables leads to uneven distribution of currents and the risk of abnormal temperature rise.
- Seismic certification to IEC 60980, Richter scale >7 and MSK 64 severity 9.
- The busbar trunking and tap-off units are designed to guarantee the safety of personnel and equipment:

> plug-on connections to silver-plated copper bars

> bolted connections with tightening torque guaranteed by torque nuts

> foolproof system to avoid the risk of assembly errors

> IP55 certified splash and dust protection

> **sprinkler** resistance test in compliance with Volkswagen specifications (valid only for top-mounted units)

> access to live parts have IPxxD protection (1 mm wire diameter).

Its metal enclosure and high protection degree protect the busbar trunking from all external aggressions (corrosion, rodents, etc).

A large range of tap-off units

Canalis KS tap-off units are fully compatible with Canalis KT:

- They cover all your requirements:

> Canalis KS tap-off units: 63 to 630 A

> Canalis KT tap-off units: 400 to 1250 A.

- They offer circuit breaker or fuse protection.

This offer includes tap-off units that can be fitted with the Transparent Ready system:

- They monitor your installation to avoid overloads, thus ensuring service continuity
- They provide metering to allow accurate management of your electrical distribution network (allocation of costs to each consumer).

PD202089-rW

Introduction

Canalis is adapted for all types of buildings

Key points

Office and hospital buildings

- Fire barrier
- Halogen free
- Small size
- Operating continuity

Car industry and industrial buildings

- Operating continuity
- Able to be evolved
- Low voltage drops
- Network readability

Shopping centres, airports and exhibition centres

- Halogen free
- Distribution and metering
- Able to be evolved
- Sprinklers

Internet Data Centers

- Operating continuity
- High tap-off density
- Able to be evolved
- Network compactness and readability

GettyImages-524708040-300

Image4-300

100144-300

CUP0027589-300

CLP0300696_RGB_EA-300

PD395077-68_r

Canalis® Solutions

Solution for Data Center

- iBusway for Data Center catalogue:
  DEBU028EN
- iBusway for Data Center brochure:
  DEBU027EN

Solution for lighting management

- iBusway for lighting management:
  Canalis DALI technical installation guide
  DEBU032EN
- Brochure iBusway for lighting management:
  DESWED112002EN
- Catalogue iBusway for lighting management:
  DEBU035EN

Application datasheets/Guide

- In cruise ships:
  DESWED105014EN
- In livestock production buildings:
  DESWED105010EN
- In logistic centers:
  DESWED105011EN
- In car parks:
  DESWED108011EN
- In greenhouses:
  DESWED105013EN
- In garages:
  DESWED106004EN
- In hypermarkets:
  KD0C98CTAHYEN
- In automotive industry:
  KD0C98CTAAUEN
- In Photo-Voltaic:
  For information consult your sales office
- In Data centre:
  For information consult your sales office

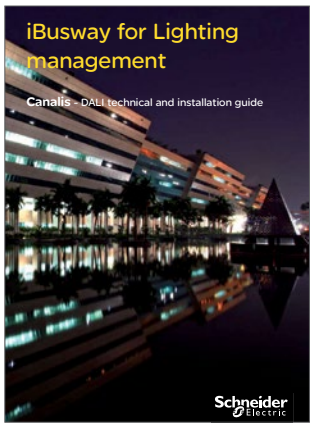

Design guideline
Usage of Canalis KT in PV applications

Introduction

Canalis, the reference all around the world

Tertiary

Applications	Name	Lighting and low current		Medium current		High current	Country
		KBA	KBB	KN	KS	KT	
Offices							
P117484-32	Air France (headquarters)				●		France
	Allianz				●	●	Germany
	Axa	●			●		France
	Chamber of Commerce					●	Luxembourg
	Commerz Bank		●		●		Germany
	Lexel			●	●		Sweden
	Telefónica					●	Spain
	Trade Center	●				●	Spain
	Tour du RDC				●	●	Tunisia
	Turning Torso				●		Sweden
	Vodafone			●			New Zealand
Internet Data Center							
38EQI029-32	Banco Commercial Português				●	●	Portugal
	Colt			●		●	France
	Digiplex			●	●		Sweden
	IBM	●		●	●	●	Spain, Italy
	MCI-Worldcom	●		●	●	●	Italy, United Kingdom
Hotels and restaurants							
032627-32	Hyatt					●	Tunisia
	Mc Donald's						France
	Soldeo Andorra Hotel				●	●	Spain
Hospitals							
P119196-32	Children Clinic				●	●	Sweden
	Brussels University Hospital						Belgium
	Derby Hospital				●		United Kingdom
	Oran Hospital			●		●	Algeria
	St Joseph Hospital				●		France
	Stockholm Hospital				●		Sweden
	Val de Grâce Hospital				●		France
	Michalon Hospital				●	●	France
	Manussia Hospital				●		Egypt
Supermarkets and hypermarkets							
054723-32	Alcampo	●		●		●	Spain
	Auchan	●	●	●	●	●	World
	B&Q		●	●	●		United Kingdom
	Carrefour	●	●	●	●	●	World
	Coop	●		●	●		Italy
	Fnac	●				●	Spain, France
	Ikea	●		●	●	●	China, Spain, France, Sweden
	Mark & Spencer	●					Belgium, Spain, United Kingdom
	Toys'R Us				●		Spain

Life Is On Schneider Electric

Canalis, the reference all around the world

Industry

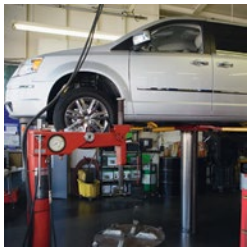

PB110345-32

Applications	Name	Lighting and low current		Medium current		High current	Country
		KBA	KBB	KN	KS	KT	
Car industry							
	BMW	●	●	●	●		Italy
	Citroën	●	●	●	●	●	China, Spain, France
	Daewo				●		South Korea
	Dacia	●	●	●	●	●	Romania
	Iveco	●		●	●	●	Spain, Italy
	Peugeot		●	●	●	●	China, Spain, France
	Nissan	●	●	●	●	●	Spain
	Renault	●	●	●	●	●	Spain, France, Czech Republic
	Seat						Spain
	Valéo	●			●	●	China, France, Italy, Poland
	Volkswagen		●	●	●		Spain, Germany
Other industries							
Aerospace industry							
	Airbus	●			●	●	Italy
Food-processing industry							
	Coca-Cola	●				●	Spain, Italy, Belgium
	Danone	●			●	●	World
	Pasquier			●	●		France
Livestock production farms and greenhouses							
	Favier henhouse	●					France
	Greenhouse		●				Netherlands
Ceramic industry							
	Esmalglas ceramic	●	●	●	●	●	Spain
Electricity							
	Legrand	●					France, Turkey
Watch-making							
	Rolex	●			●	●	Switzerland
Microelectronics							
	Intel	●	●	●	●		Irelande
	ST Micro-electronique	●		●	●	●	France
Lead industry and water treatment							
	Grundfos				●		China
Industrial technology							
	Bosch	●			●		China
Telephony							
	Phillips				●		Netherlands
	Nokia	●			●		Sweden
Textile industry							
	Louis Vuitton	●		●	●		Spain
	Delta	●		●			Israel

Introduction

Canalis, the reference all around the world

Infrastructure

Applications	Name	Lighting and low current		Medium current		High current	Country
		KBA	KBB	KN	KS	KT	
Airports							
PD202250_r	Paris Airport	●	●	●	●	●	France
	Cairo Airport				●		Egypt
	Heathrow Airport			●	●	●	United Kingdom
	Hong-Kong Airport					●	China
	Landvetter Airport				●		Sweden
	Arlanda	●			●	●	Sweden
	Satelite Barajas					●	Spain
Marine							
PD202251_r	Chantier de l'Atlantique				●	●	France
	Meyerwerft				●	●	Germany
Undergrounds							
PD202252_r	Guanghzou Underground	●					China
	London Underground		●				United Kingdom
	Madrid Underground	●				●	Spain
	Singapore Underground					●	Singapore
Other infrastructures							
	Alexandria Library				●	●	Egypt
	Centre international d'exposition de Suzhou	●			●		China
	CERN				●	●	Switzerland
	Stade de France				●	●	France

Life Is On Schneider Electric

Canalis tools and services

Working together on your solution

PB115582

DD210862

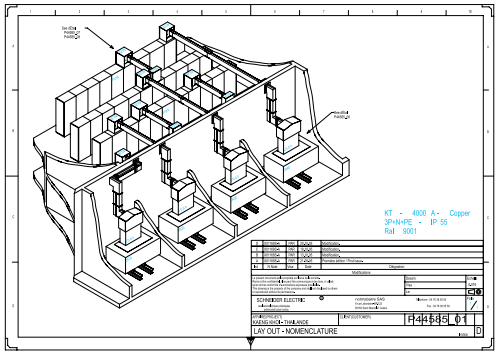

Our teams are available to provide customers with technical assistance throughout the installation of their projects.

Design of electrical distribution architectures:

- design of decentralized transport and distribution systems
- technical and financial optimization of busbar trunking design projects
- transformer/switchboard link
- installation coordination and discrimination.

Full installation drawings*:

- 3D AutoCAD drawings with corresponding parts lists
- 2D drawing with dimensions
- detailed connection drawings.

*All AutoCADs are available on Traceparts.com
BIM Models: are available on se.com.

Site supervision and commissioning assistance.

Training for designers and contractors.

Canalis Busway "Total Solution":

1	2	3	4	5	6	7	8
Project launch	Technical support	PowerSet Canalis Design drawing	Autocad drawing	Production	Project management	On-site instruction and installation	After-sales service

Introduction

Canalis tools and services

Empowering you with smart tools

DB433750

Not only providing experts to support you in your project but also provide you with smart solutions and tools for fully controllable solution.

Through QR codes on packaging, product and JB labellings sticker; customer experience haven't been more easier:

For Installers

- Easily check delivered products and dispatch it at it's future location for faster installation
- More agile access to product and installation instructions
- Easy and remote Installation tasks progression follow up through facility expert
- Can easily access all information needed for future extension.

For Facility Manager

- Resilient management of future installation through easily accessing all product and project data
- Agile maintenance management through assigning tasks on facility experts for certain junctions using QR codes and labeling sticker on JB.

Canalis Busway "Total Solution":

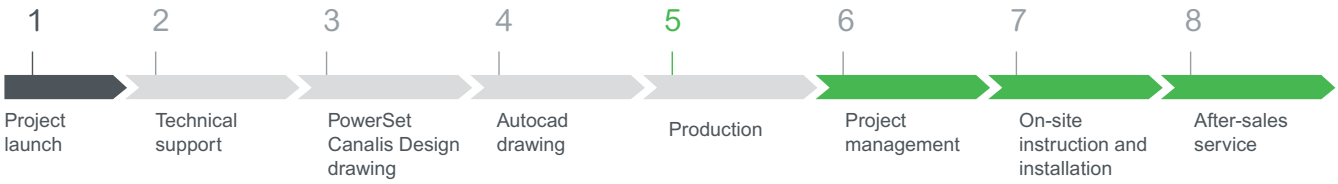

Life Is On Schneider Electric

Label Sticker

Label Sticker

DB410976

Description	Cat. no
KT JB Positioning Label Sticker	**KTB0100YL1**

Label stickers to be stick on joint blocks in site during installation.
It ease maintenance management and maintenance people to detect JB position and assign tasks on facility expert (Optional Choice).

Example of label roll (Size: 15 mm x 25 mm)

DB433595

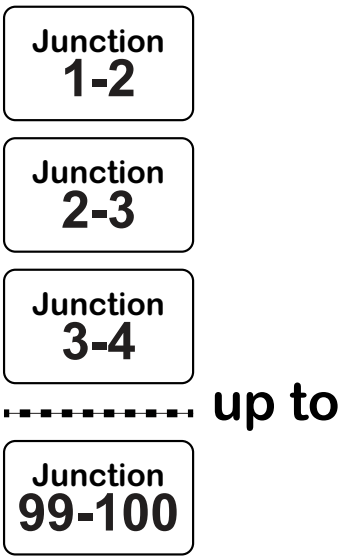

Label image

DB433682

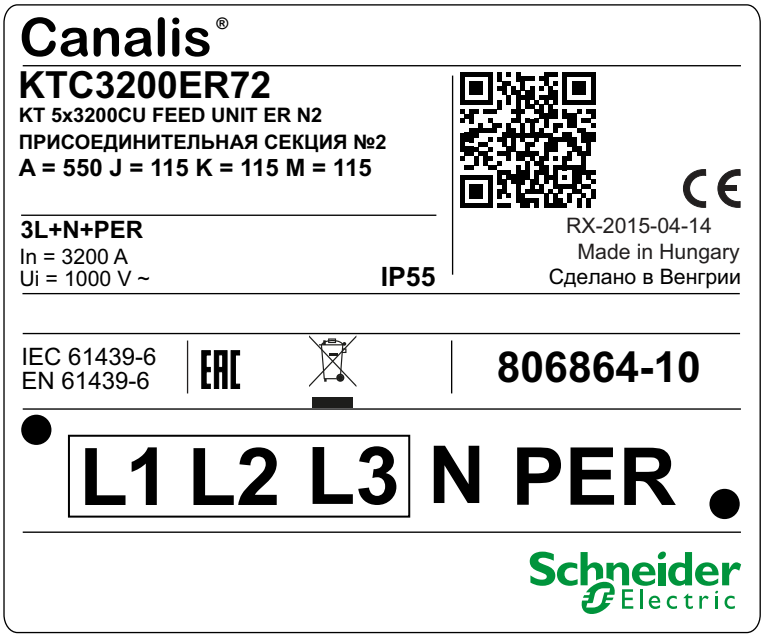

Introduction
Cantools

A
B
C
D
E
F
G

Quotation and Design tools

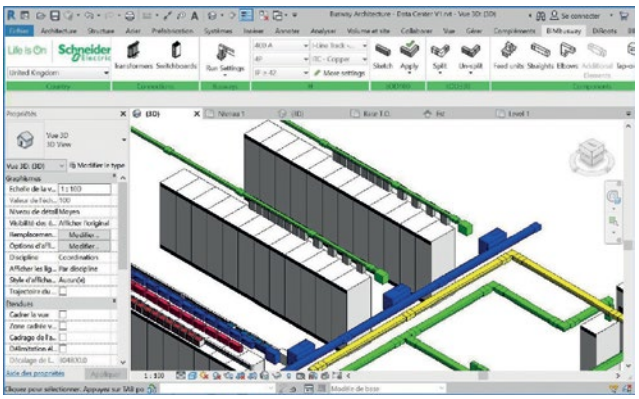

CanBrass

> is a design and costing tool for Canalis busbar trunking runs.

CanCad

> is a Plug-in for Autocad. It allows to easily design and get bill of materials.

BIMBusway

> is a Plug-in for Revit. It allows to easily design and get bill of materials in BIM format.

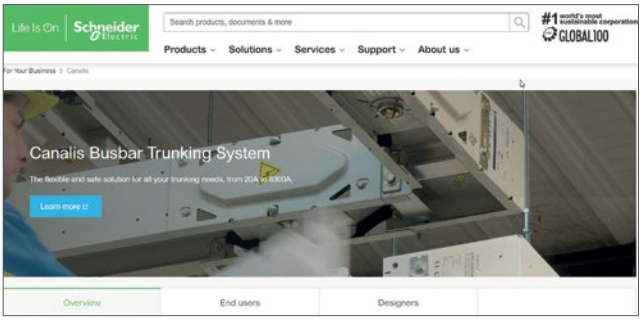

... about Canalis and I-Line ranges

Presentation and description

Introduction 3

Presentation 24

Panorama of Canalis range 24
Lighting and power distribution 24

Canalis KTC from 1000 to 6300 A 26
For horizontal transport and distribution 26
For distribution to different levels 28

Tap-off units from 25 to 1250 A 29

Description 30

General 30

Run sections 32

Other run sections - Disconnectors and run protective devices 33

Change of direction sections 34

Connection sections 35

Connection accessories 40

Supports and fixings 42

Tap-off units 43

Plug-on tap-off units for circuit breakers 44

Plug-on tap-off units for fuses 45

Fixed tap-off units for circuit breakers 46

Catalogue numbers and dimensions 47
Design guide 141
Installation guide 181
Recommendations 239
Index 244

B

Panorama of Canalis range
Lighting and power distribution

Canalis KTC

PB122259

PD202221_r_KN

PB115580-30

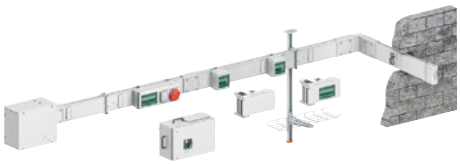

PB124535

PD202088-74_r

DB410226

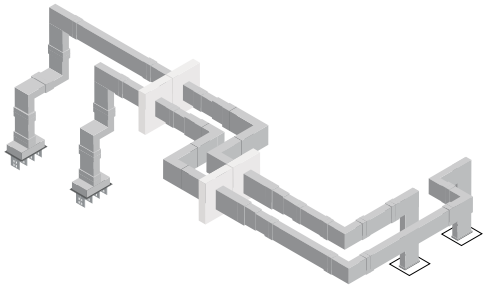

Rated service current	Rated insulation voltage	Color	Line components	
Inc	Ui		Length of components	Number of conductors

Lighting and low power distribution from 25 to 40 A - IP55

Canalis KBA				
25 A 40 A	690 V	Pre-lacquered white (RAL9003)	2 m and 3 m	2 or 4 + PE
Canalis KBB				
25 A 40 A	690 V	Pre-lacquered white (RAL9003)	2 m and 3 m	Single circuit 2 or 4 + PE Dual circuit 2 + 2 + PE 2 + 4 + PE 4 + 4 + PE

Power distribution from 40 to 160 A - IP55

Canalis KN *				
40 A 63 A 100 A 160 A	500 V	Pre-lacquered white (RAL9001)	2 m and 3 m	3L + N + PE

* Canalis KN range is available on se.com

Horizontal and vertical distribution from 100 to 1000 A - IP55

Canalis KS *					
Aluminium: 100 A, 160 A, 250 A, 400 A, 500 A, 630 A, 800 A, 1000 A	**Copper:** 160 A, 250 A, 400 A, 630 A, 800 A	690 V	Pre-lacquered white (RAL9001)	3 m, 5 m and additional or customized components	3P + N + PE

* Canalis KS range is available on se.com or catalogue: DEBU026EN

Horizontal open track distribution from 250 to 630 A - IP42

I-Line Track				
250 A, 400 A, 630 A	690 V	Pre-lacquered white (RAL9003)	Standard 3 m or customized	3L + N + PE

Power transmission and distribution from 800 to 6300 A - IP55

Canalis KT *					
Aluminium: 800 A, 1000 A, 1250 A, 1600 A, 2000 A, 2500 A, 3200 A, 4000 A, 5000 A	**Copper:** 1000 A, 1350 A, 1600 A, 2000 A, 2500 A, 3200 A, 4000 A, 5000 A, 6300 A	1000 V	Pre-lacquered white (RAL9001)	2 m and 4 m	3L + PE 3L + N + PE 3L + N + PER

* Canalis KT range is available on se.com or catalogue: KTA: ref. DEBU021EN / KTC: ref. DEBU024EN

Power transmission for outdoor and harsh environment from 800 to 6300 A - IP68

Canalis KR *				
800 A, 1000 A, 1250 A, 1350 A , 1600 A, 2000 A, 2500 A, 3200 A, 4000 A, 5000 A, 6300 A	1000 V	Gray (RAL7030)	Up to 3 m	3L 3L + N or 3L + PE or 3L + PEN 3L + N + PE

* Canalis KR range is available on se.com or catalogue ref. DEBU031EN

Panorama of Canalis range
Lighting and power distribution

	Branching points			Accessories
	Center to center distance		**Protection type**	
	0.5 m, 1 m on 1 side	L + N + PE or 3L + N + PE (10/16 A) pre-cabled or to be cabled,with phase selection or fixed polarity, with lighting control	With fuses or without protection	> Flexible components > Fixing devices with quick adjustment > Communication bus (DALI, KNX, ASI) > Cable ducts
	0.5 m or 1 m on 1 or 2 sides	L + N + PE or 3L + N + PE (10/16 A) pre-cabled or to be cabled,with phase selection or fixed polarity, with lighting control	With fuses or without protection	> Flexible components > Fixing devices with quick adjustment > Communication bus (DALI, KNX, ASI) > Cable ducts
	0.5 m, 1 m on 1 side	16 A to 63 A (plug-in)	Units for modular circuit breakers, fuses and sockets	> Flexible components > Fixing devices with quick adjustment > Remote control bus > Cable ducts > Installation accessories
	0.5 m or 1 m on each side for horizontal version, and on one side for vertical version	16 A to 400 A (plug-in)	Units for circuit breakers (modular, Compact NSX), fuses, sockets	> Riser ducting offer > Fixing devices with quick adjustment > Cable ducts > Installation accessories > Fire barriers
	Continuous opened channel	16 A to 63 A outputs in tap-off units		> Data Center IT room > Fixing devices with quick adjustment > Installation accessories > Color customization
	0.5 m or 1 m	80 A to 630 A (plug-in) 400 A to 1250 A (bolt-on)	Units for circuit breakers (modular, Compact NSX), fuses, sockets	> Power supply ends > Direction change angles and T-pieces > Fixing devices and fuses
	-	-	-	> Power supply ends > Direction change angles and T-pieces > Fixing devices > Fire resistant elements

Canalis KTC from 1000 to 6300 A
For horizontal transport and distribution

Canalis KTC

Run sections

- ■ Rating: 1000 to 6300 A.
- ■ Transport sections:
- □ fixed lengths: 2 and 4 meters
- □ non-standard lengths: 0.5 and 3 meters
- ■ Distribution sections:
- □ fixed lengths: 2 and 4 meters.

PD202313_r

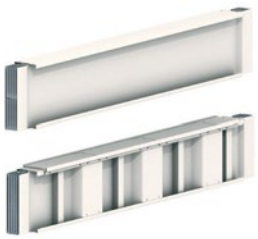

Tap-off units

- ■ Plug-in tap-off units:
- □ protection by 25 to 630 A fuses
- □ protection by 100 to 630 A Compact NSX circuit breakers.
- ■ Fixed tap-off units:
- □ protection by 400 to 1250 A Compact NS and NSX circuit breakers
- □ protection by 400 to 1000 A fuses.

PD202314_r2

Change-of-direction sections

- ■ Change-of-direction sections adapt to all busbar trunking requirements.
- ■ There are both fixed and made-to-measure lengths.

PD202315_r

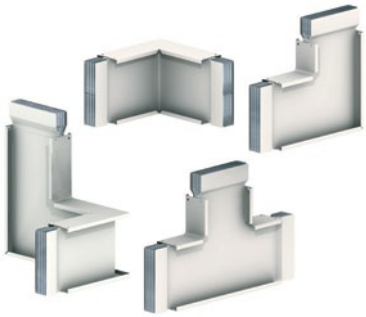

PB125376

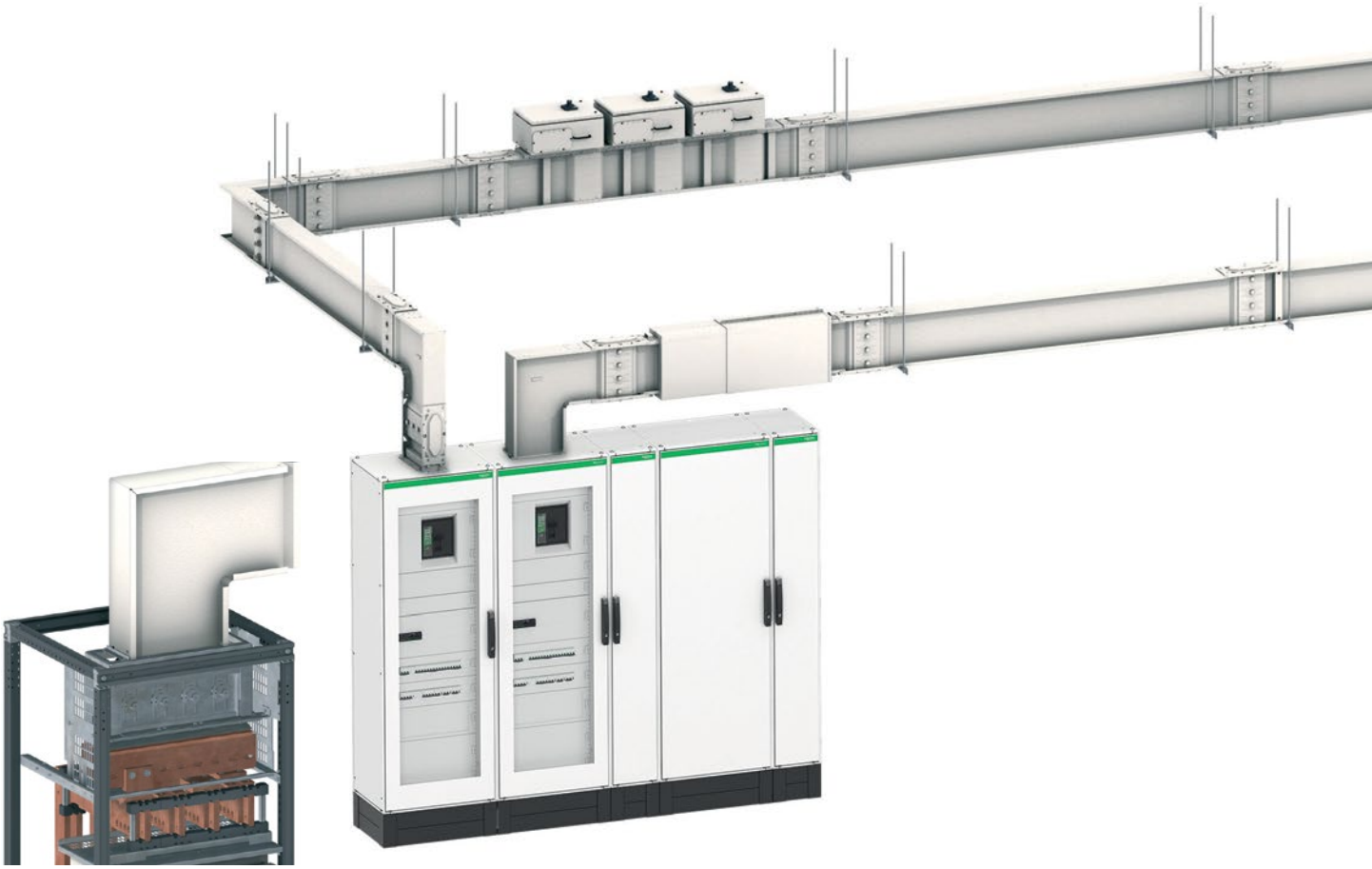

PD202328_r

Canalis KTC from 1000 to 6300 A
For horizontal transport and distribution

Interface connections

■ Pre-fabricated interfaces connections can be incorporated into:
□ Prisma**SeT** and Okken switchboards
□ France Transfo dry-type transformers.

PD202431_r

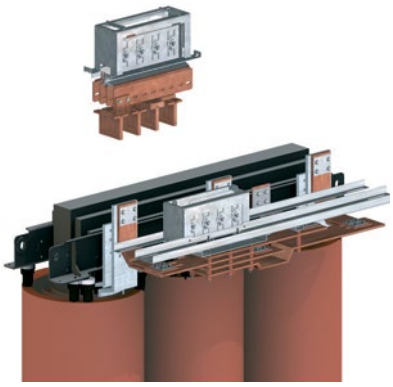

Universal supply connections

■ Supply connections allow the busbar trunking to be connected to the switchboard's busbar or to the transformer.

PD202317_r

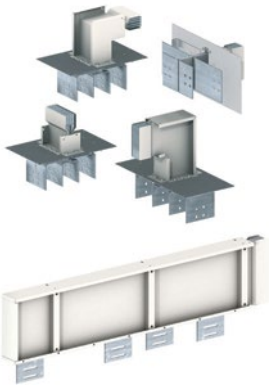

Horizontal fixing supports

■ There are two types of support for installing the busbar trunking horizontally.
■ One type of fixing: to fix the busbar trunking to its support.

PD202318_r

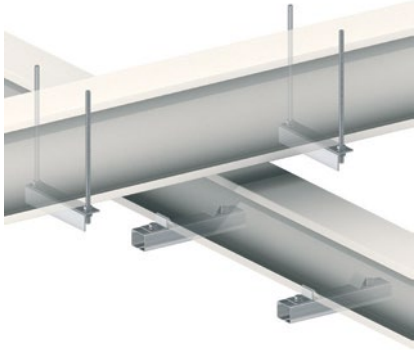

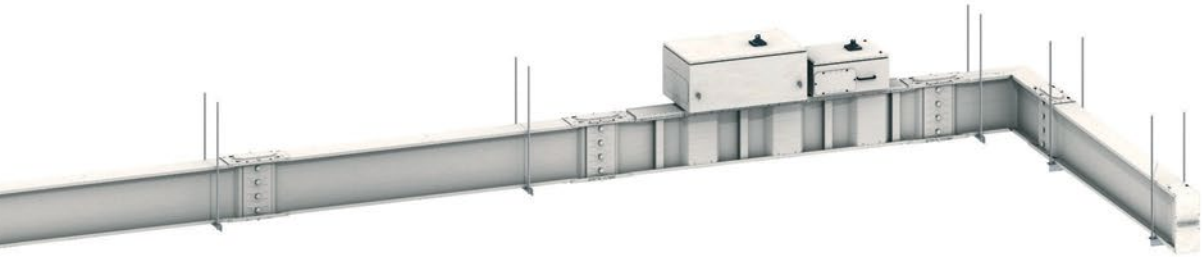

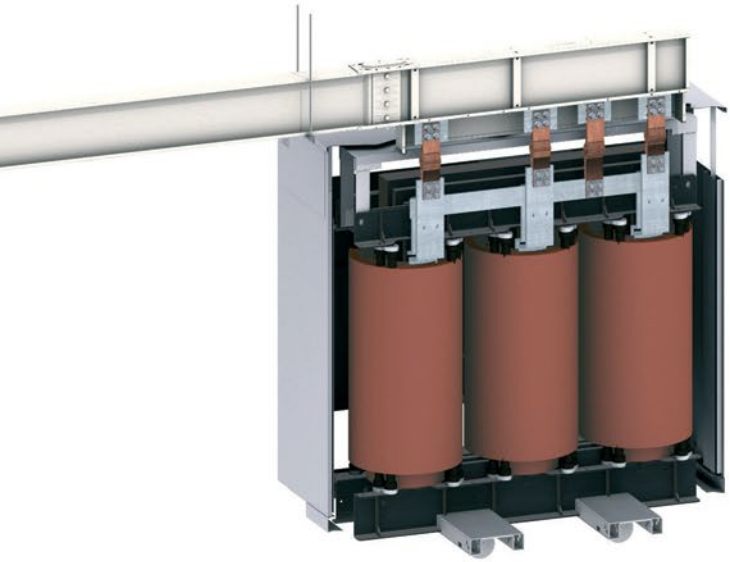

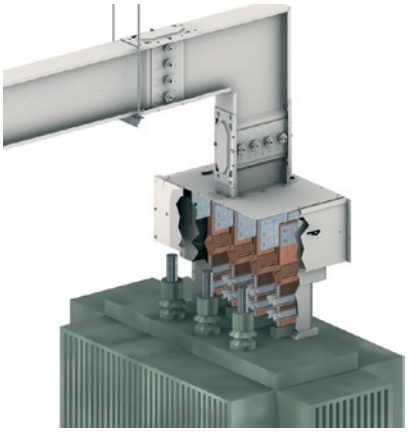

PD202300_r

Canalis KTC from 1000 to 6300 A
For distribution to different levels
Rising mains

Canalis KTC

Run sections

- Rating: 1000 to 6300 A.
- Distribution sections, fixed or made to measure.
- Transport sections for going through floor slabs, made to measure 0.5 to 3 meter lengths.

PD202320_r

Vertical fixing support

- For installing the busbar trunking vertically, they ensure:
  - height and depth adjustment
  - load sharing
  - absorption of expansions, vibrations, etc.
- They can be fixed either to the floor, the wall or to a bracket.

PD202321_r

Tap-off units

- Plug-in tap-off units:
  - protection by 25 to 630 A fuses
  - protection by 100 to 630 A Compact NSX circuit breakers.
- Fixed tap-off units:
  - protection by 400 to 1250 A Compact NS and NSX circuit breakers
  - protection by 400 to 1000 A fuses.

PD202322_r

PD202319_r

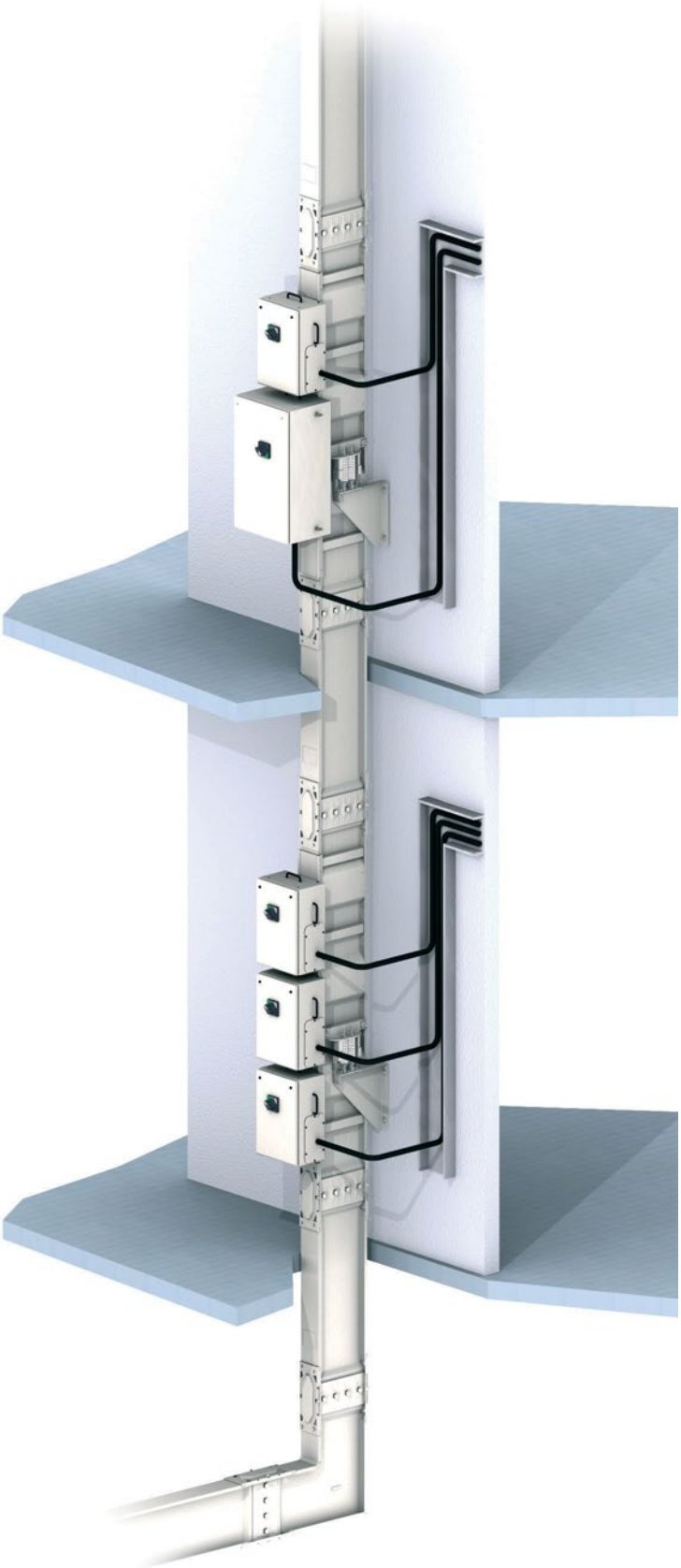

Tap-off units from 25 to 1250 A

Rating (A)	Type of protection			
	Modular switchgear	Compact NS and NSX	Fuses	Compact NSX with measurement and metering
Plug-on tap-off units				
25 to 100	DB406528 63 A, 8 x 18 mm modules DB406529 100 A, 12 x 18 mm modules	PD202150_r For Compact NSX100 circuit breaker	PD202138_r 25/50 A for NF/DIN fuses 32 A for BS fuses PD202147_r 63 A for DIN fuses 100 A for NF/DIN fuses 80 A for BS fuses	
160	PD202150_r For NG125/160 circuit breaker	PD202150_r For Compact NSX160 circuit breaker	PD202323_r 160 A for NF/DIN/BS fuses	
250 to 400		PD202324_r For Compact NSX250 circuit breaker PD202325_r For Compact NSX400 circuit breaker	PD202184_r 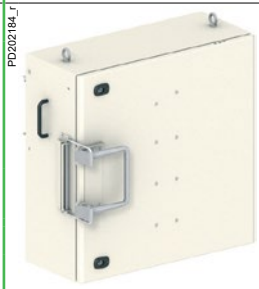 250/400 A for NF/DIN fuses	Fitted with DIN rail for Powerlogic PM810 PD202324_r For Compact NSX250 circuit breaker PD202325_r For Compact NSX400 circuit breaker
630		PB124589 For Compact NSX630 circuit breaker	PB124579 630 A for NF/DIN fuses	
Fixed tap-off units				
400 and 630		PD202326_r For Compact NSX400 and NSX630 circuit breakers	PD240004_r 400 to 630 A for DIN fuses(1)	
800, 1000 and 1250		PD202327_r For Compact NS800, NS1000 and NS1250(1) circuit breakers	PD240005_r 800 to 1000 A for DIN fuses(1)	

(1) Tap-off units for NS1250 and fuses (from 400 to 1000 A) in IP31 only.

Canalis KTC

The Canalis KT busbar trunking is intended for high power distribution and transport in industrial, commercial and tertiary buildings.
Assembly of prefabricated sections that adapt to all run configurations.

Run sections

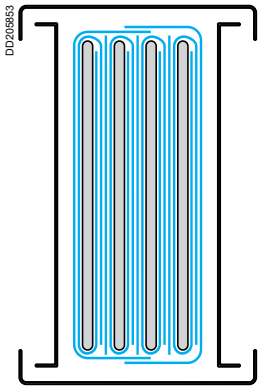

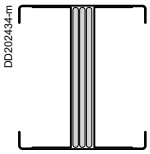

3L + PE

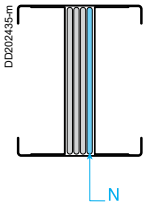

3L + N + PE

The conductors are sandwiched together inside the metal casing.

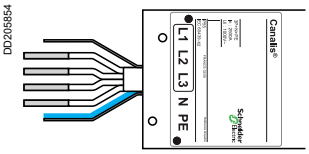

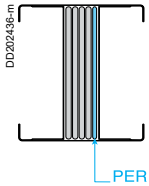

3L + N + PER

- 9 ratings are available, from 1000 to 6300 A.
- 4 copper live conductors with identical cross-sections (3L + N + PE version).
- Conductors insulated using polyester film, class B 130°C, halogen free.
- Standard busbar trunking is IP55.
- Insulation voltage: 1000 Volts.
- Available polarities: 3L + PE, 3L + N +PE, 3L + N + PER (reinforced PE)

The KT busbar trunking is of compact design and can be installed edgewise, flat or vertically.
This design, allows the busbar trunking to be installed through a floor slab or fire barrier wall.
As standard, the Canalis KT busbar trunking acts as a fire barrier in accordance with IEC 61439-6.

The compact technology allows Canalis KT busbar trunking to withstand high short-circuit currents and is suitable for most electricity distribution applications.

The RAL 9001 pre-lacquered galvanized steel casing provides protection and mechanical fixing of the conductors.
Further, it is used as the PE protective conductor (in accordance with NFC 15100 and IEC 60364).

In its reinforced version 3L + N + PER, the busbar trunking is fitted with an additional internal copper conductor with a cross-section equal to half that of the phase conductor.
A reinforced version can be supplied on demand. This version has lateral reinforcement (see page “Characteristics”).

The Canalis KT busbar trunking is suitable for applications containing harmonics by taking into account the appropriate derating factor. See “Harmonic currents” in the Design guide.

Tap-off contact

The KS plug-on tap-off units are connected to the busbar trunking whilst live (off-load) via spring jaw connections.
Contact zone coating:
- silver-plated copper at jaw contact points.

Fire rated components

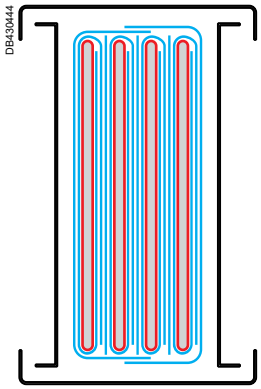

mica film

FT, FC and FP components are suitable for applications requiring continuity of service in case of fire. These components have the same cross section as the standard Canalis KT ones and are fully compatible and connectable.

These components comply with IEC 60331-1 and IEC 60331-21 for a duration of 480 minutes at 830°C.

To achieve this performance, the conductors are wrapped in a mica film before being isolated by a polyster film. The plastic parts of the joint blocks are also reinforced to withstand higher temperatures.

Joint block

DD205856-G

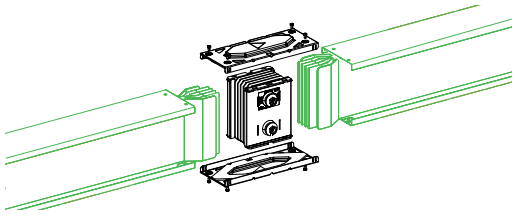

DD205857-G

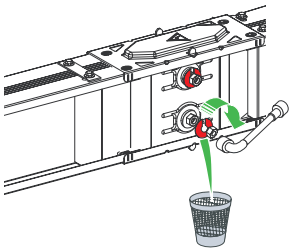

The junction between sections is made using a joint block.
The joint block provides the following:
■ electrical junction between live conductors and between PE protective conductors
■ mechanical link between the two sections.
Contact zone coating in silver-plated copper.

It provides simultaneous continuity between all conductors.
It is tightened using torque bolt(s) (1 to 4 depending on the rating) with snap-off heads.
The nut head snaps-off, freeing a red washer, when the correct tightening torque is reached.

This operation is checked visually:
■ if the red washer is absent: it has been tightened
■ if the red washer is visible: it has not been tightened.

This device guarantees the necessary contact pressure between live conductors and is operator independent.

For dismantling or maintenance operations, the nut has a second head.
The tightening torque is 6 daN.m.

All sections (apart from ER and EL feed units) are supplied with their joint block, delivered in a separate parcel.
If the run has a feed unit (ER or EL) at each end, an additional joint block must be ordered.

Phase order

The standard phase order for the busbar trunking is denoted **N321**.

DD205858-G

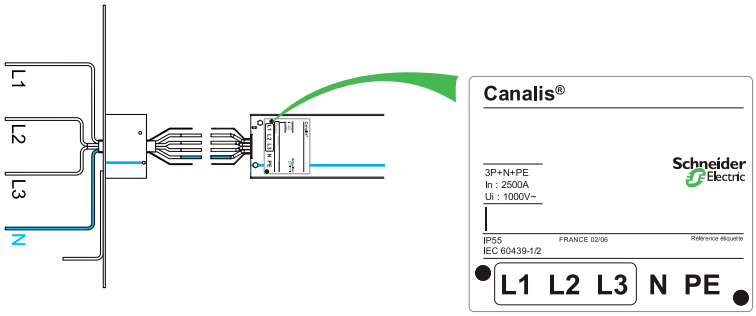

However, this order can be changed to **N123**. A label showing the phase order «N123» is supplied with each element to indicate the change.

DD205859-G

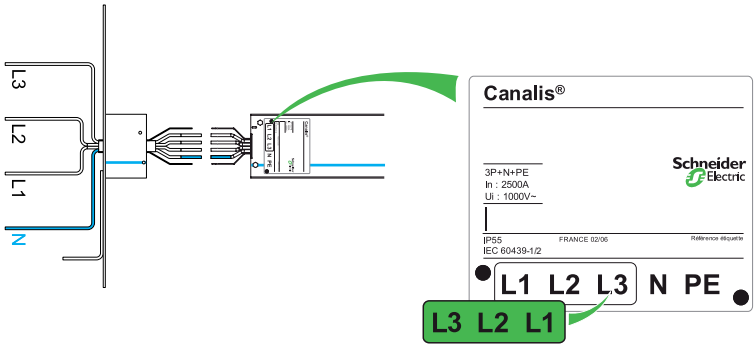

Canalis KTC

Straight sections

Transport sections - Type ET

Transport the current without tap-off points.
Available in 2 and 4 metre fixed lengths or made to measure from 0.50 to 4 metres.

DD202390

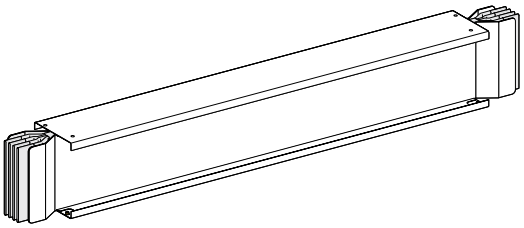

Sections with tap-off points for plug-on tap-off units - Type ED

ED run sections are for current distribution.
They use 25 to 630 A KS tap-off units.
These tap-off units can be plugged-on whilst live, but off-load.
Available in fixed 2 and 4 metre lengths with 3 tap-off points on one side or made to measure from 2,5 to 3,5 metre.

DD205860

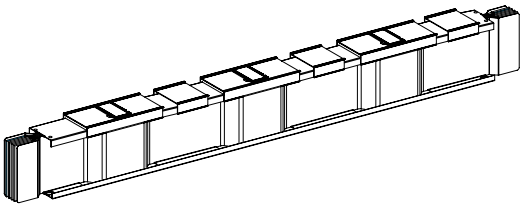

Sections with tap-off points for fixed tap-off units - Type EB

EB run sections are for current distribution.
They use specific KT 400 to 1250 A tap-off units.
These tap-off units can only be fitted / removed when the run is not energised.
Available in a 2 metre fixed length with one tap-off point or a 4 metre fixed length with 2 tap-off points.

DD205861

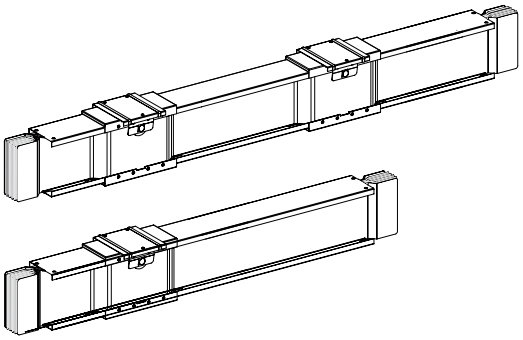

Other run sections

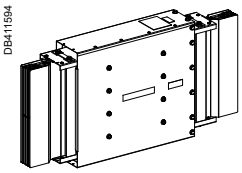

Expansion section - Type DB

It controls and absorbs the expansion of Canalis runs and must be used on runs over 30 metres and each time the busbar trunking passes through a building expansion joint.
Refer to the installation guide.

Available in a 1 metre length, it can be fitted vertically or horizontally.
At its centre it has flexible conductor joints and a sliding case able to absorb the relative movements of each part of the section.

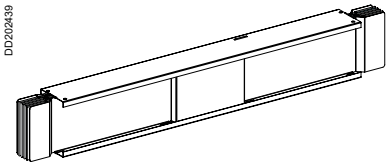

Transposition sections - Types TN, TP

Used when the phase order of the switchboard is different to that of the transformer.
Available in a 1 metre length and is the same physical size as a transport section.

■ The TN version transposes the neutral.

■ The TP type transposes the phases.

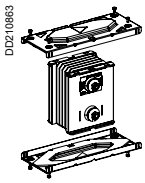

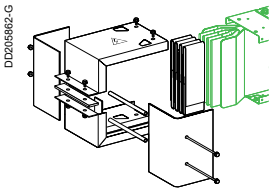

Additional joint block - Type YA

If the run has a feed unit (supplied without a joint block) at each end, an additional joint block must be ordered.
Each joint block is supplied with the necessary covers, nuts and bolts.

Run end cover - Type FA

The end cover protects and insulates the conductor ends and is fitted to the last section.

Disconnectors and run protective devices

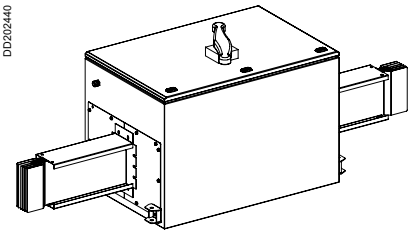

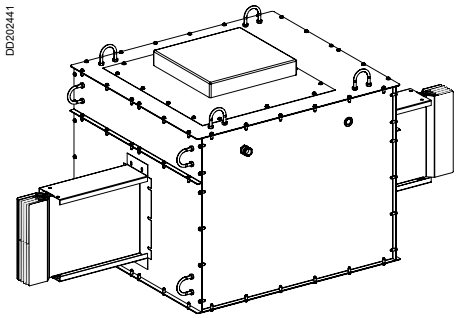

Fitted between 2 flat or edgewise sections, they isolate or protect a busbar trunking part run.
Each assembly is supplied fitted with a 3 or 4-pole device complete with rotary handle.
Supplied with:
■ Pre-Wired Auxiliary with connection terminal kit
■ lifting rings
■ upstream and downstream terminal shields.
Colour: white RAL 9001, 100 % polyester paint on galvanized sheet steel.
Refer to manufacturer's data for switchgear characteristics.
Fitted with a rotary handle, the tap-off unit can only be opened once the device has been switched off.

Run disconnector tap-off units - Type SL

Type SL for:
■ **Compact NS1000** to **1600 A** type NA fixed isolators:
□ unhingeable door
□ 3-point closing (possibility of locking with key lock, not supplied)
■ **Interpact INV** isolator, **2000** to **2500 A**:
□ unhingeable door
□ 3-point closing (possibility of locking with key lock, not supplied)
■ **Masterpact NW3200 A** type HA fixed isolator supplied with:
□ transparent protection cover
□ adaptation kit for Ronis lock + 1 Ronis lock
□ complete Harting plug, not cabled.

Run protection tap-off units - Type PL

Type PL for:
■ **Compact NS1000** to **1600 A** type N fixed circuit-breakers:
□ unhingeable door
□ 3-point closing (possibility of locking with key lock, not supplied).
For circuit-breakers greater than 1600 A, consult the sales office.

Canalis KTC

Simple changes of direction

Elbows - Types LP and LC

To go up or down, to turn right or left:

■ type LP, flat elbow available in fixed or made-to-measure lengths

DD205865

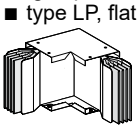

■ type LP●C, flat made-to-measure angled elbow

DD202432

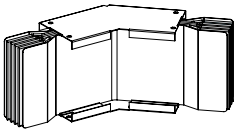

■ type LC, edgewise elbow available in fixed or made-to-measure lengths

DD205866

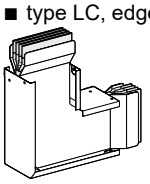

■ type LC●C, edgewise made-to-measure angled elbow.

DD205867

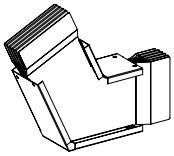

Edgewise T junctions - Type TC

To feed runs perpendicular to the main run.

DD205868

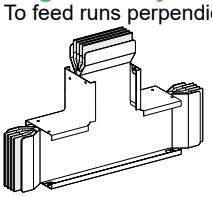

Changes of direction

Zeds - Types ZP, ZC and CP

3-branch made-to-measure:

■ flat or edgewise, to move the run axis upwards, downwards, to the right or to the left without having to bend the busbar trunking:

□ type ZP, flat Zed

DD205869

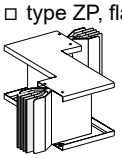

□ type ZC, edgewise Zed

DD205870

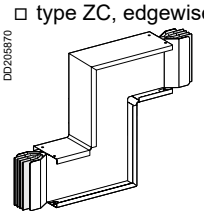

■ edgewise / flat, to provide the busbar trunking with a bend:

□ Type CP, edgewise and/or flat Zed.

DD205871

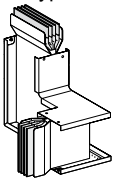

To connect the KTC busbar trunking to different terminals or to transformer, switchboard, generator set, etc. busbars. Canalis offers high performance connection sections which meet all requirements.

These sections provide installation flexibility combined with quick and simple assembly.

Further, the connections are made using torque bolts which provide both ease of installation (use of a standard spanner for tightening to 60 N.m) and a visual check before energising.

Connections via interface to PrismaSeT, Okken and Trihal

DD202306-G

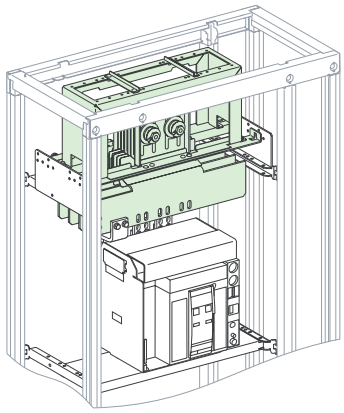

PrismaSeT switchboard

Direct connection to Trihal transformers and Prisma**SeT** & Okken switchboards.
Supplied factory or panelbuilder assembled and tested to IEC 61439-1 and IEC 61439-6.
Quick and simple connection of the busbar trunking to the interface.
Reduced size.
Joint block integrated into the interface.
A sealing kit (rating dependent) must be ordered.

DD202314-G

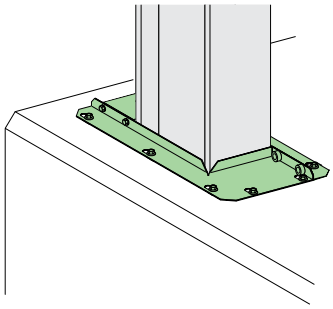

Sealing kit

DD202310-G

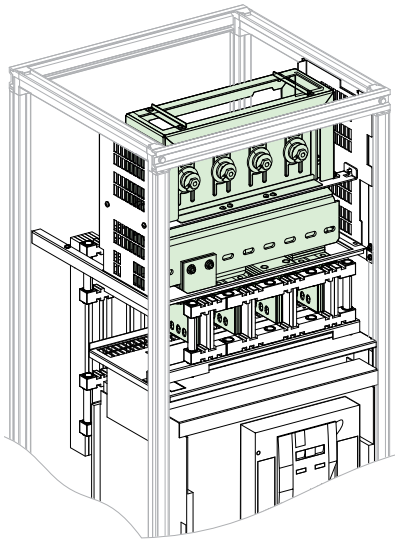

Okken switchboard

PrismaSeT and Okken switchboards

For fixed or draw-out incoming device, front or rear connection:
- Masterpact NW08 to NW63 or NT06 to NT16 circuit-breaker
- Compact NS630b to NS1600 circuit-breaker.

Possibility of switching the phases around.

DD202503-G

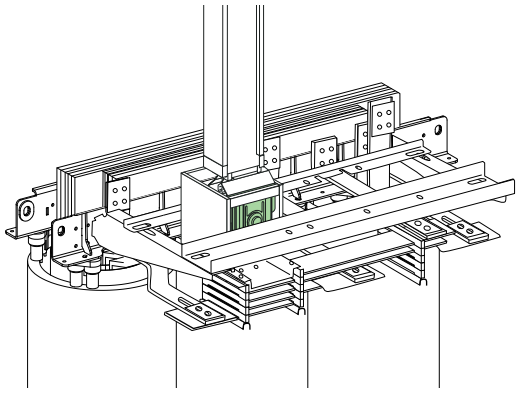

France Transfo Trihal dry type transformers

For naturally ventilated or force ventilated transformers.
Protection degree:
- IP00
- IP31.

Secondary voltage: 410 V

± 15 mm adjustment in the 3 axes.

Canalis KTC

Universal connections to switchboards and oil immersed transformers

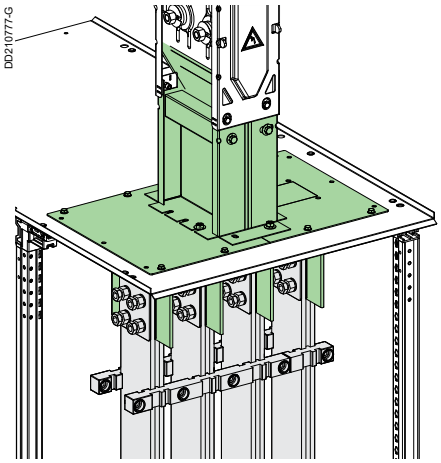

Feed units - Type ER

They allow the busbar trunking to be connected to a switchboard's busbar, or to the terminals of an oil immersed transformer, generator set, etc.

They come complete with a mounting plate fitted:
- either directly to the roof of the switchboard
- or via the intermediary of a protective cover.

Vertical or horizontal incoming busbar trunking.

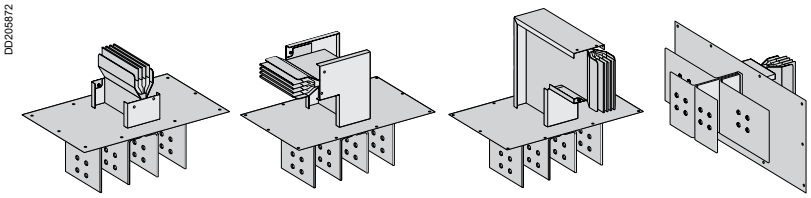

Types ER N1/N2 | Types ER N3/N4 | Types ER N5/N6 | Type ER N7

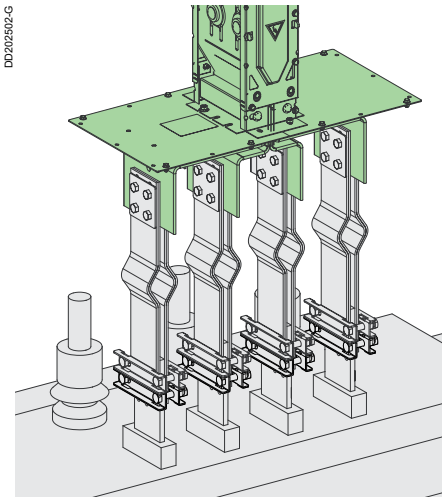

Connection:
- either directly to the busbar
- or by flexible bars and connection plates
- or by braids
- or by cables.

- ER feed units are supplied without a joint block.
- If the run has a feed unit at each end, an additional joint block must be ordered.

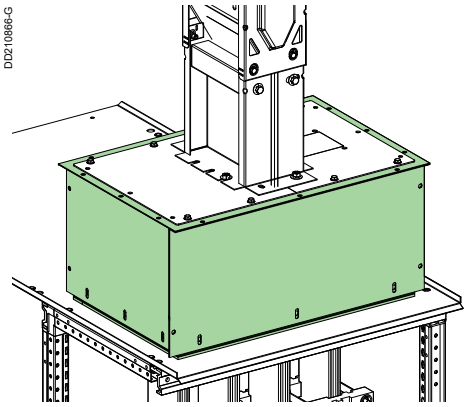

Protective covers - Types CS, CR, BC

Protects the external part of the connection.

■ Type CS

Height adaptable flexible protective cover adaptable for ER N1 to N6 feed units with a between centres distance of 115 mm.

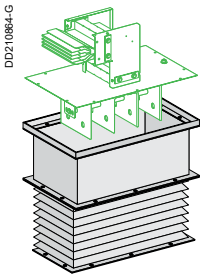

For a vertical incomer - Types CR1 to CR3

Made-to-measure rigid protective cover for ER N1 to N7 feed units.
They are height adjustable by ± 50 mm.

■ Type CR1 for a horizontal incomer.

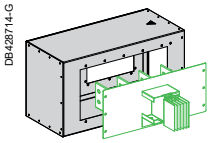

■ Types CR2 and CR3 for a vertical incomer.

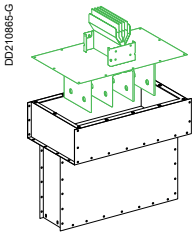

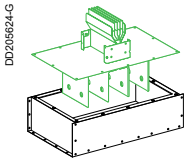

■ Types CR7 and CR8
Protective covers for Minera oil immersed transformers.
Only for ER N1 to N6 feed units with a between centres distance of 150 or 170 mm depending on the rating.

Fit directly onto the BT series transformer tanks.

Never use with HV porcelaine bushings.

□ Type CR8 for a vertical incomer.

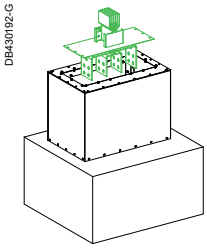

□ Type CR7 for a horizontal incomer.

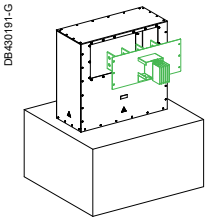

□ Type BC
Protective cover for direct cable connection to ER N1 to N6 feed units with a between centres distance of 115 mm.

Canalis KTC

Universal connections to dry type transformers

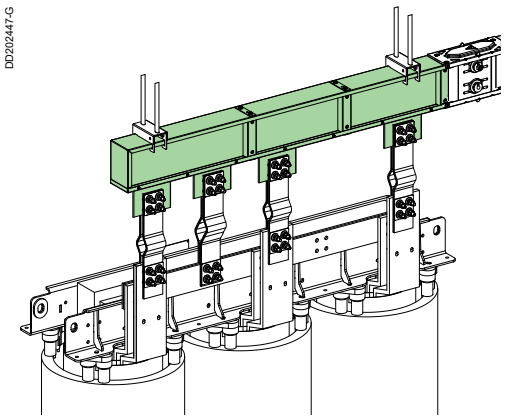
DD202447-G

Feed units - Type EL

For dry type transformers with the neutral between the phases.
They allow optimum connection to the busbar trunking.

The junction with the busbar trunking is achieved:
- either from the side

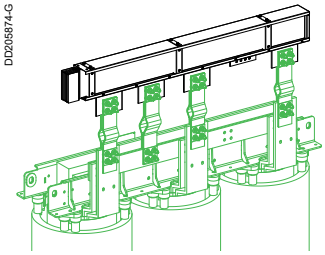
DD205874-G

Type EL N1/N2.

- or from the centre.

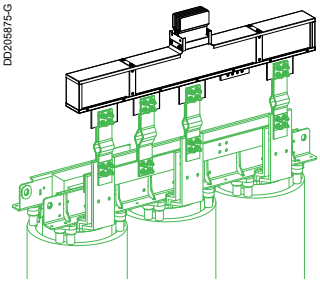
DD205875-G

Type EL N3/N4.

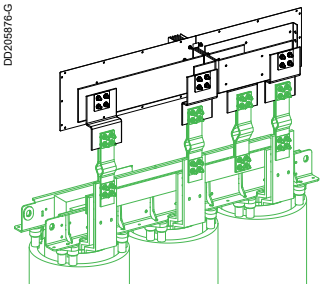
DD205876-G

Type EL N5.

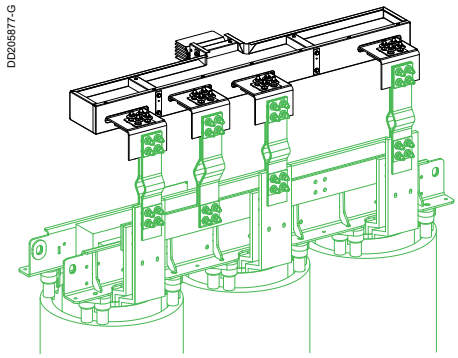
DD205877-G

They are of similar design to straight transport sections and can be installed edgewise or flat.
If installed flat, a set of angle brackets can be ordered.

The following must be specified at the time of order:
- phase order
- distance between phases (a ±20 mm lateral adjustment can be made use of on site).

The link between the transformer terminals and the connection section is either by flexible bar connection plates or by braids.

Protective covers - Type CR4 to CR6

These protect the connections with an IP31 casing when connecting to a transformer.
They are height adjustable by ±50 mm.

■ Type CR4
Protective cover for EL N1 to N4 feed units.
Edgewise assembly.

DD202342-G

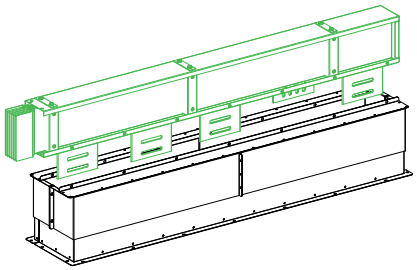

■ Type CR5
Protective cover for EL N1 to N4 feed units.
Flat assembly.

DD202343-G

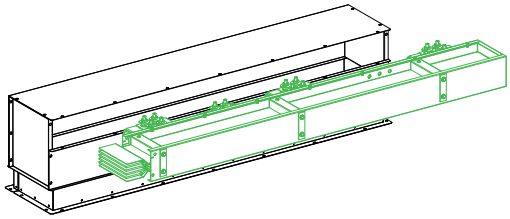

■ Type CR6
Protective cover for EL N5 feed unit.
Edgewise assembly.

DD202346-G

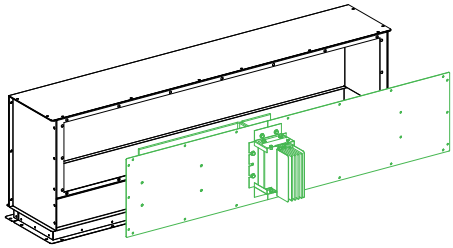

Canalis KTC

Accessories for direct connection to the switchboard

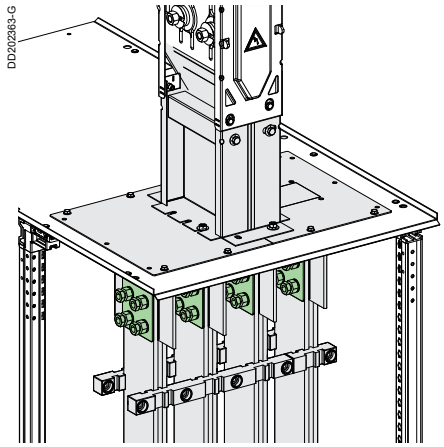

The conductors of ER N1 to N6 feed units are connected directly to the switchboard busbars.
YB2 copper spacers are available to compensate differences in thickness between the switchboard bars (10 mm) and the connection part (6 mm).

Make-up of kit:
- 8 x 2 mm thick copper spacers
- 16 off M12 x 60 mm bolts, class 8.8
- 16 contact washers
- 16 torque nuts
- 8 steel spacer plates.

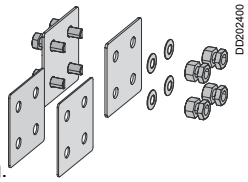

Order a set per feed unit whatever the rating.

Switchboard connection accessories using connection plates

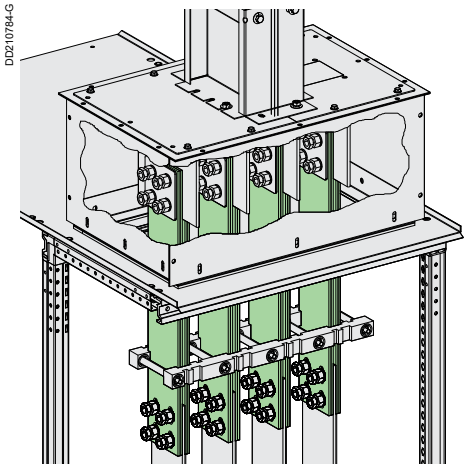

The conductors of ER N1 to N6 feed units are connected via connection plates to the switchboard busbars.

The YC are flexible bars made up of 5 copper sheets of 1 x 100/120 mm or of 5 bimetal aluminium/copper sheets 1.4 x 100/120 mm.
The number of connection plates needed is proportional to the busbar trunking rating.
There are 2 types:
- YC1, uninsulated bar, made-to-measure length of 300 to 600 mm with 4 oblong holes at the ER unit end.
The holes at the opposite side are made to measure to match with the switchboard connections.

- YC5, insulated 600 or 1000 mm long flexible bar, stripped at one end and with 4 oblong holes.
The length of the holes at the switchboard side are to be adapted on-site.

Nuts and bolts
The connection plates are fixed to the feed unit using the YB3 nut and bolt kit, made up of:
- 16 off M12 x 60 mm bolts, class 8.8
- 16 contact washers
- 16 torque nuts
- 8 steel spacer plates.

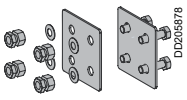

Clamps
YS1 clamps enable high short-circuit current levels to be withstood; only for bars with a 115 mm spacing.

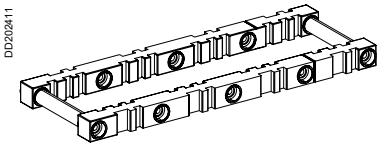

Insulation
See page 41.

Transformer connections - Types YC, YT

DD205879-G

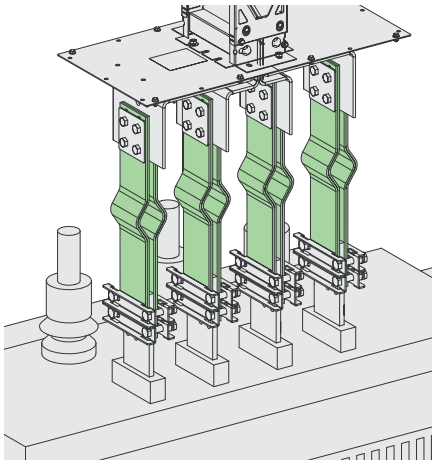

The feed unit conductors are connected to the transformer bars via connection plates or braids:
- the YC are flexible bars made up of 5 copper sheets 1 x 100/120 mm or of 5 bimetal aluminium/copper sheets 1.4 x 100/120 mm.
- braids, YT type, are copper braids with a 600 mm² cross-section.

The number of connection plates needed is proportional to the busbar trunking rating.

Connection plates

The YC3 is an uninsulated bar with an expansion kink; it is 250 to 600 mm long and has 4 holes at the ER unit end.
The holes at the opposite side are made-to-measure to match with the transformer connections.
They can be fitted to the transformer side:
- either using bar clamps (no drilling)
- or drilled and bolted (to be carried out on site).

DD202412

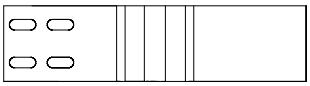

YS2 and YS3 bar clamps enable connection without the need to drill the connection plates.
They allow height adjustment.
- Type YS2, bar clamps for 100 mm transformer connection terminals.
- Type YS3, bar clamps for 120 mm transformer connection terminals.

Make-up of kit: 1 set of 8 parts.

DD205880

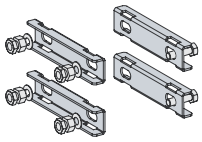

Braids

Type YT, 400 mm long insulated braid with 4 holes at each end.

DD202415

The connection plates and braids are fixed to the feed unit using the YB4 nut and bolt kit, made up of:
- 16 off M12 x 80 mm bolts, class 8.8
- 16 contact washers
- 16 torque nuts
- 8 steel spacer plates.

DD230229-G

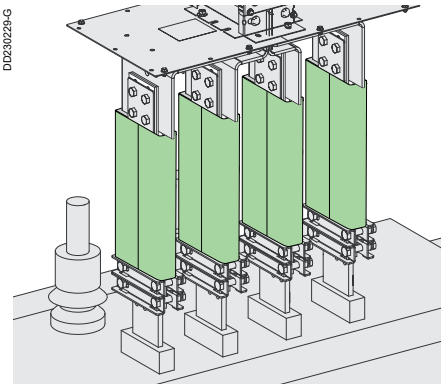

Insulation

The YF conduit allows the various conductors of a connection performed with braids or with bare copper foils to be insulated.
Installation is performed after complete assembly of the connection, with scratch fastening for easier setup.
The insulating conduit is formed of a 2-metre plastic duct that can be cut to length as needed.

DD230230

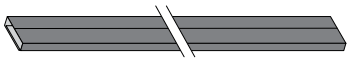

Canalis KTC

Horizontal supports

DD202372-G

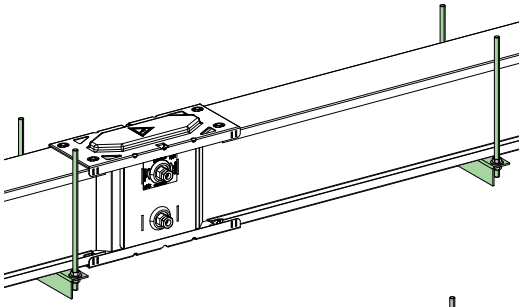

The ZA types allow the busbar trunking to be fixed and adjusted along its length, as well as absorbing its movements.

Supports for horizontal sections

■ Type ZA1, to support edgewise busbar trunking only, consists of a steel angle bracket and 2 x 2 metre threaded M10 rods.
The maximum distance between supports is:
□ 3 metres for edgewise busbar trunking
□ 2 metres for flat busbar trunking.
See installation precautions.

DD202485

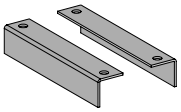

DD202368-G

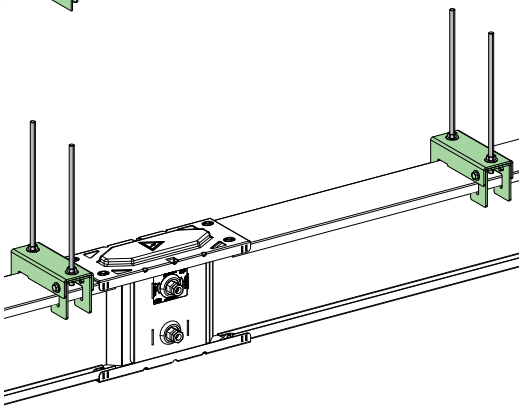

■ Type ZA4, to support the busbar trunking from the top.
■ These supports are needed to fix edgewise EL N1 to N4 feed units for dry type transformers (rods not supplied).

DD202486

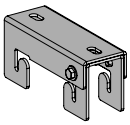

DB411342

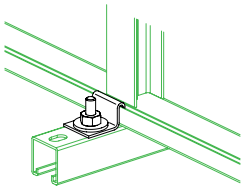

Fixing bracket

The ZA3 keeps the busbar trunking in place on its support, without blocking it, in order to allow expansion movements.

DB411394

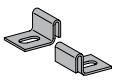

Vertical supports

DB428655-G

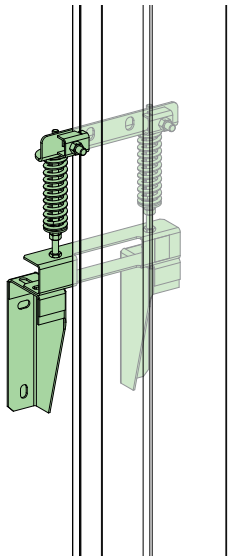

For KTC1000 to KTC2000.

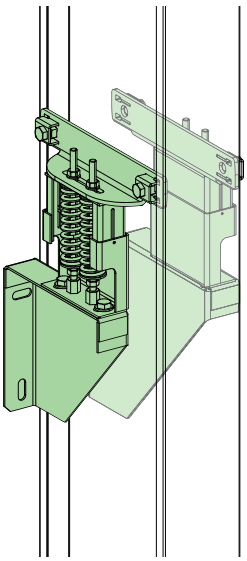

For KTC2500 to KTC5000.

The ZA5 is for supporting vertical sections.
They fix sections of a vertical run to the building's structure.
This type of fixing support has the following advantages:
■ assembly:
□ to a wall
□ to a wall bracket
□ to the floor
■ height and depth adjustment
■ spring adjustment to ensure distribution of the load at each floor
■ avoids the transmission of building forces to the busbar trunking (expansion and vibration).

DB428656-G

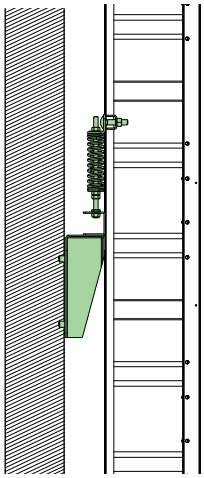

To a wall bracket
KTB0164ZA5●.

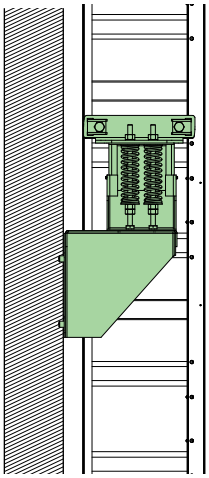

To a wall bracket
KTB0204ZA5● to
KTB0404ZA5●.

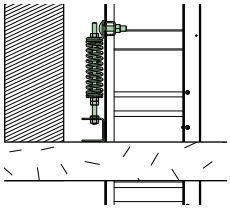

To the floor
KTB0164ZA51.

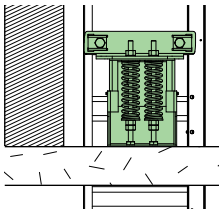

To the floor
KTB0204ZA51 to
KTB0404ZA51.

The tap-off units are used to instantly connect loads or secondary runs, and comply with installation standards and regulations (IEC 60364), whatever the earthing system (TT, TNS, TNC or IT).
When off-load, they can be plugged-on and off and be operated whilst live.
Plugging-on and plugging-off automatically opens and closes the tap-off point.

DD210275-G

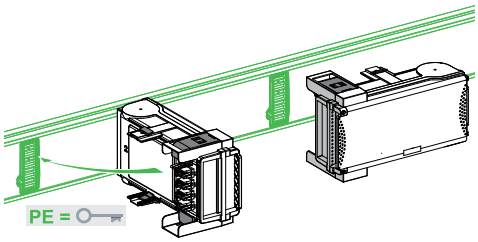

No live part is accessible with the door open. The protection degree is IPXXB (finger protection).
They are IP55 by construction (no accessory is required).

DD210276-G

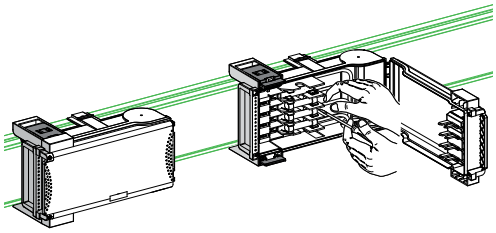

Safety and operation

Fuse and modular switchgear tap-off units (AC20) are isolated as soon as the tap-off unit door is opened.
Tap-off unit disconnection by opening or closing the cover should be carried out only if the downstreamload is de-energised.
For circuit breaker tap-off units, there are safety mechanisms to prevent:
■ the tap-off unit being plugged-on and plugged-off with the tap-off unit door closed
■ the door being closed if the tap-off unit has not been locked onto the busbar trunking
■ access to the electrical equipment and connection terminals when live
■ the door being opened in the "ON" position for tap-off units fitted with a Compact NS or NSX or NG circuit breaker.

These tap-off units can be fitted with accessories such as:
■ door early break contacts
■ adapter for lead sealing
■ etc.
The sheet steel tap-off units are fitted with a carrying handle.

DD210466

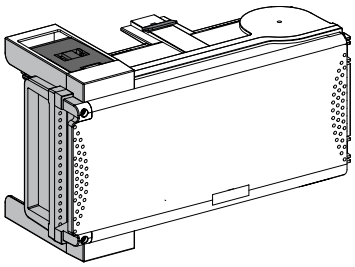

Characteristics of tap-off units up to 100 A
■ Colour:
□ white (RAL 9001) body and carrying handles
□ transparent green door (similar design to the Kaedra enclosures).
■ Material: self-extinguishing, halogen-free insulating plastic (fire resistant and very high temperature withstand).
Other characteristics: cable gland drilling zone, stainless steel screws and the door can be lead sealed.

DD202012

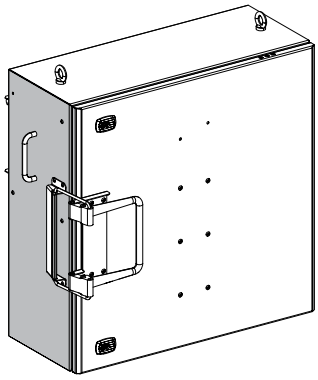

Characteristics of tap-off units from 160 to 400 A
■ Colour:
□ white (RAL 9001) body
□ black carrying handles (RAL 9005)
□ 100 % polyester paint.
■ Material: galvanized sheet steel.

Other characteristics:
■ unhingeable door (120° opening hinges)
■ vertically bevelled polyurethane seals with a double fold for increased rigidity (similar design to the Sarel Spatial 3D enclosures)
■ 25 mm grill type gland plates for a maximum access area.

Plug-on tap-off units for circuit breakers

Canalis KTC

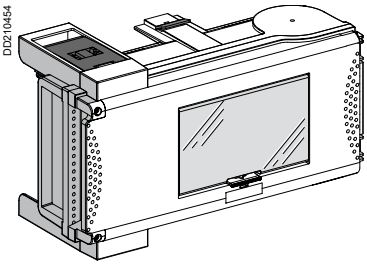

Isolator tap-off units for modular switchgear

Most 18 mm Multi 9 modular devices can be fitted into these tap-off units.
They have a window on the front face for switchgear control and visualisation.

A transparent shutter ensures the window can be sealed.
Two tap-off ratings are available:
- 63 A nominal current for 8 modules
- 100 A nominal current for 12 modules (accepts C120 circuit breakers).

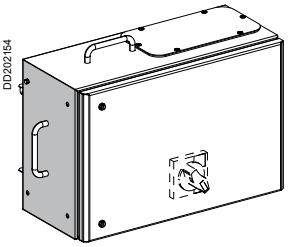

Tap-off units for NG type modular switchgear

These tap-off units are fitted with a DIN rail and upstream connections for 18 mm wide modular devices.
The switchgear is operated via a rotary handle which prevents door opening when the circuit breaker is in the “ON” position.
Nominal current: 160 A for a 13-module capacity (accepts NG125 or NG160 fitted with a Vigi unit).

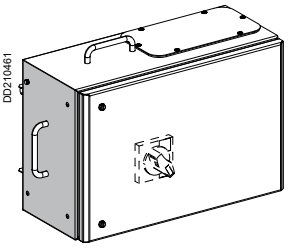

Isolator tap-off units for Compact NSX circuit breakers

These tap-off units are fitted with mounting plates and upstream connections for fixed, front-connected 100 to 630 A Compact NSX circuit breakers (N, H or L version) with a rotary handle.

The 400 A tap-off units can only be fitted onto straight lengths with a rating greater than 400 A.

For plug-on circuit breakers, Vigi units, etc, please consult your Schneider Electric contact.

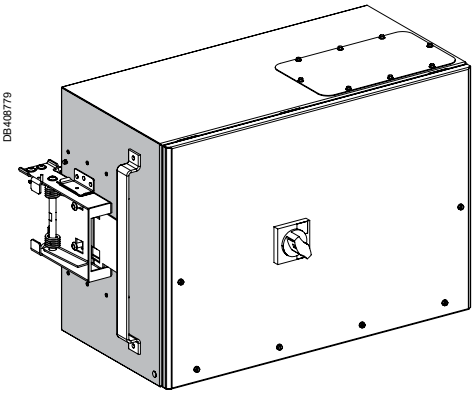

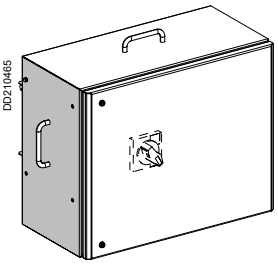

Measurement and metering isolator tap-off units

These tap-off units allow sub-metering to re-allocate power consumption costs by consumer and to monitor installations by, for example, following run load levels.
The values measured using the Compact NSX TI unit are sent to the measurement unit which then sends the information to a central unit via a bus (See Measurement and metering).

They are fitted with:
- a mounting plate for a Compact NSX 250 or 400 A circuit breaker with an extended rotary handle and a Compact NSX current transformer module (TI unit)
- a DIN rail for installing a Powerlogic PM810 measurement unit, a set of terminals, etc.

In severe operating conditions (> 40 °C ambient temperature), we recommend the use of a PM810 without display.

Description
Plug-on tap-off units for fuses

These tap-off units provide the tap-offs with fuse protection (fuses not supplied).

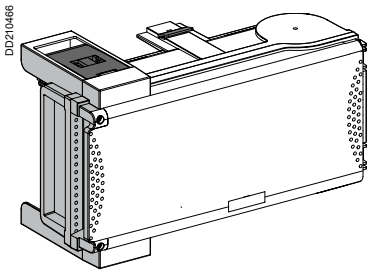

Plastic tap-off units

Fitted with carriers for:
- 50 to 100 A cylindrical NF fuses
- 25 to 63 A DIN screwed fuses
- 100 A DIN blade fuses
- 32 to 80 A BS screwed fuses.

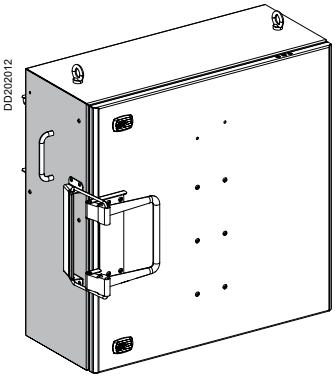

Steel tap-off units

Fitted with carriers for:
- 160 to 400 A NF/DIN blade fuses
- 160 A BS screwed fuses
- fuses disconnector 630 A.

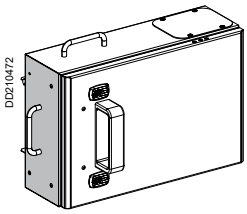

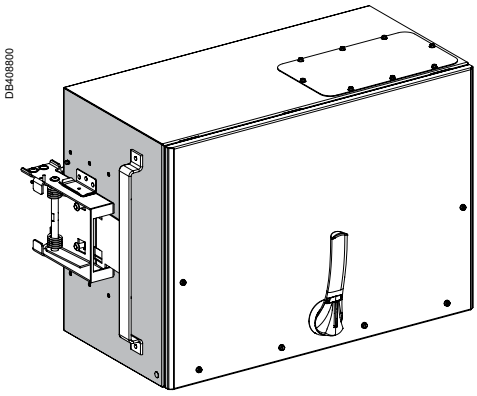

Canalis KTC

Safety and operation

The electrical connection is made by plugging-on the tap-off unit into dedicated tap-off point whilst the busbar trunking is de-energised (plugging-off the unit must also be done with the busbar trunking de-energised).
The connection is mechanically tightened using a one-use torque bolt (10 daN.m).
A mechanical foolproof system avoids the risk of incorrect assembly.
The door can only be opened once the load has been isolated (rotary handle).
The bolt can only be tightened or untightened with the door open.
No live part is accessible with the door open, protection degree IP2X.

Characteristics of tap-off units from 400 to 1250 A

■ Colour:
□ white (RAL 9001) body.
■ Material: galvanized sheet steel.
■ Other characteristics:
□ the cables exit laterally through 2 aluminium plates (to be drilled by the installation contractor)
□ cabling space can be increased by using the cable box supplied with the tap-off unit
□ the door is fixed using 6 captive M6 screws and can be completely removed to facilitate cabling.

DD202451

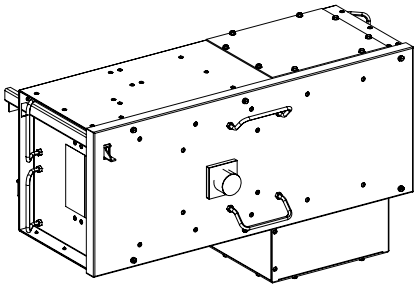

Steel tap-off units

These tap-off units are used to supply loads or secondary runs (e.g. medium power distribution using Canalis KS).
They are fitted to specific EB type straight lengths.
They comply with installation standards and regulations, whatever the earthing system (TT, IT, TNS or TNC):
■ tap-off units fitted with a mounting plate for Compact NS and NSX 400/1250 A, 3 or 4 P:
□ fixed device
□ front connections
□ extended rotary handle.

3 models:
■ Compact NSX400/630 A, connection capacity:
□ IP54
□ 3 x 300 mm² cables for the phases and neutral (hole diameter = 15 mm),
□ 150 mm² for the PE
■ Compact NS800/1000 A, connection capacity:
□ IP54
□ 4 x 300 mm² cables for the phases and neutral (hole diameter = 15 mm)
□ 200 mm² for the PE (cable clamp)
■ Compact NS1250 A, connection capacity:
□ IP31
□ 4 x 300 mm² cables for the phases and neutral (hole diameter = 15 mm)
□ 200 mm² for the PE (cable clamp).

DD202497

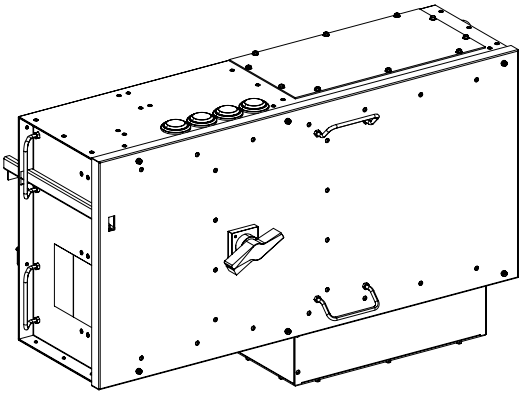

Catalogue numbers and dimensions

Introduction 3
Presentation and description 23
Catalogue-number coding 48
Canalis KTC 6300 A 49
Run components 50
Additional run components 56
Elbow components for changing direction 60
Zed components for changing direction 66
Fire rated straight feeder lengths 70
Fire rated Jointing units 71
Fire rated flat elbows 72
Fire rated edgewise elbows 73
Canalis interfaces for PrismaSeT LV switchboard 74
Canalis interfaces for Okken LV switchboard 77
Sealing kits 78
Feed units for switchboards and oil immersed transformers 79
Rigid protective covers 86
Protective covers for Minera transformers 88
Flexible protective covers Cable boxes 90
Feed units for dry-type transformers 92
Protective covers for dry-type transformers 97
Connection accessories 100
Supports and fixings 106
Accessories 109
Fire-barrier kit 109
Plug-in tap-off units 110
63 to 100 A tap-off units for modular devices 110
160 A tap-off units for modular devices 111
160 to 400 A tap-off units for Compact NSX circuit breakers 112
250 to 400 A tap-off units for Compact NSX circuit breakers 113
630 A tap-off units for Compact NSX circuit breakers 114
50 to 100 A tap-off units for NF fuses 115
100 to 400 A tap-off units for NF fuses 116
25 to 63 A tap-off units for DIN fuses 117
100 to 400 A tap-off units for DIN fuses 118
630 A tap-off units with switch-disconnector for DIN fuses 119
32 to 160 A tap-off units for BS fuses 121
Accessories 122
Bolted tap-off units from Canalis KT for Compact NSX/NS 400 to 1250 A circuit breakers 123
630 and 1000 A bolted tap-off units with switch-disconnetors for DIN fuses 124
Coupling isolators from1000 to 2500 A 125
Coupling isolators 3200 A 126
Protection of the run using Compact NS circuit breakers from 1000 à 1600 A 127
Special products 128
Canalis KH substitution by Canalis KT 130
KTC/KGF connection elements 130
Preserved KH tap-off units and substitution table 131
250 and 630 A tap-off units from Canalis KH range for Compact NSX circuit breakers 134
250 A tap-off units from Canalis KH range with switch-disconnector for DIN fuses 135
630 A tap-off units from Canalis KH range with switch-disconnector for DIN fuses 136
400 and 630 A tap-off units from Canalis KH with disconnector Jean Muller 137
Expansion of a Canalis KH line by means of Canalis KT 138
Expansion of a Canalis KH line by means of Canalis KT with a T-piece tap-off unit 139
Mid KT line power supply with KH tap-off units installed 140

Design guide 141
Installation guide 181
Recommendations 239
Index 244

C

Canalis KTC

Catalogue-number composition

K T ● ●●●● ●● ● ●●

■ One letter designating the material.

Type	Code
Aluminium	A
Non conducting	B
Copper	C

■ Two letters identifying the type of component.

Type	Code
Cable box	BC
Bolted tap-off unit	CB
Fire-barrier	CF
Edgewise and flat zed	CP
Rigid protective cover	CR
Flexible protective cover	CS
Expansion unit	DB
Tap-off unit for Compact NSX	DC
Distribution length for bolt-on tap-off units	EB
Distribution length for plug-in tap-off units	ED
Distribution length for KH plug-in tap-off units	EH
Feed unit for dry-type transformers	EL
Feed unit	ER
Feeder length	ET
End cover	FA
Bolted tap-off unit for fuses	HF
Connection KH/KT	HT
Edgewise elbow	LC
Flat elbow	LP
PER for Prisma**SeT** and Okken interfaces	PE
Tap-off unit with protective device	PL
Tap-off unit with fuse disconnectors	SD
Tap-off unit with switch-disconnector	SE
Tap-off unit with isolator	SL/RL
Edgewise tee	TC
Neutral crossover	TN
Phase crossover	TP
Sealing kit	TT
Connection device	YA
Connection torque nut kit	YB
Flexible bar	YC
Bracket	YE
Insulating sheath	YF
Connection plate	YP
Bar supports	YS
Braids	YT
Supports and fixing devices	ZA
Edgewise zed	ZC
Flat zed	ZP

■ Four digits indicating the rating of the trunking.

■ One digit indicating the trunking polarity

Polarity	PE protective conductor (1)	Short circuit level (1)	Code
3L + PE	Standard	Standard	3
3L + N + PE	Standard	Standard	4
3L + N + PER	Reinforced	Standard	5
3L + N + PER	Reinforced	Reinforced	7

(1) For further information, see page 142 "Characteristics".

■ Variable number of alphanumeric characters indicating characteristics specific to the component.
See the section dealing with the given component.

■ Fire rated components.

Type	Code
Fire rated straight feeder length	FT
Fire rated edgewise elbow	FC
Fire rated flat elbow	FP
Fire rated connection device	FJ

Trunking cross section

Rating (A)	1000	1350	1600	2000	2500	3200	4000	5000	6300
Number of bar jointing bolts	1	1	1	2	2	2	4	4	4
Bar cross-section (mm)	70 x 6	100 x 6	120 x 6	160 x 6	200 x 6	2 x (120 x 6)	2 x (160 x 6)	2 x (200 x 6)	4 x (120 x 6)

Trunking height H (mm)

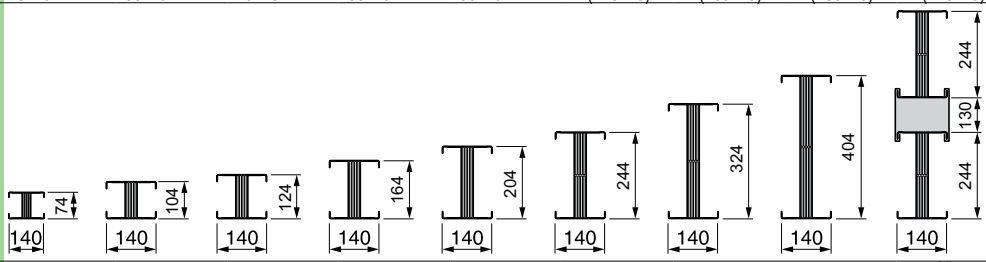

DB411584

Holes for connections (mm)

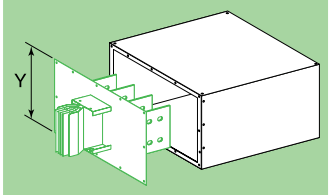

DD202181-G

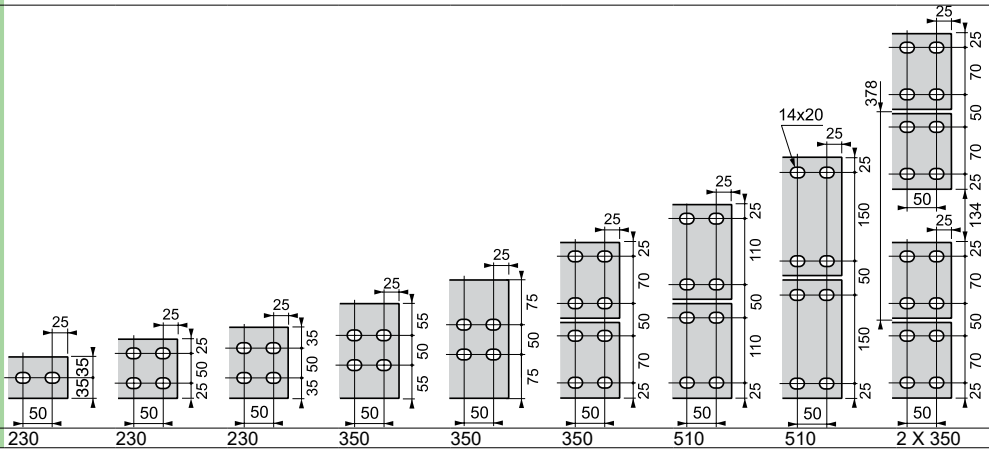

DB411585

Y	230	230	230	350	350	350	510	510	2 X 350

Canalis KTC

DB411146

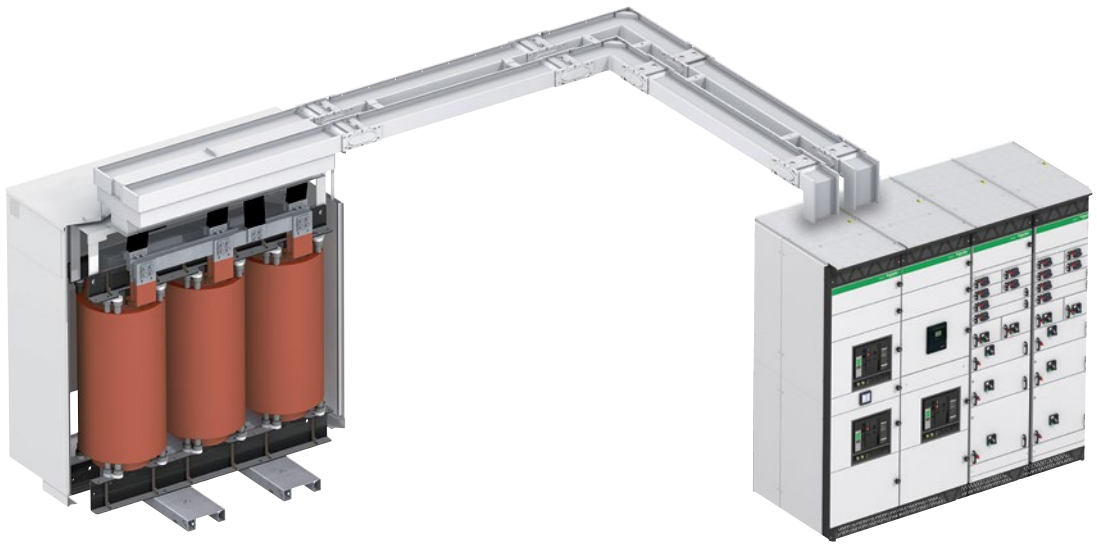

KTC6300 A is made of 2 units KTC3200 A linked together thanks to guide supports GS.
For KTC6300 A ratings contact sales office for quotation.

DB429011

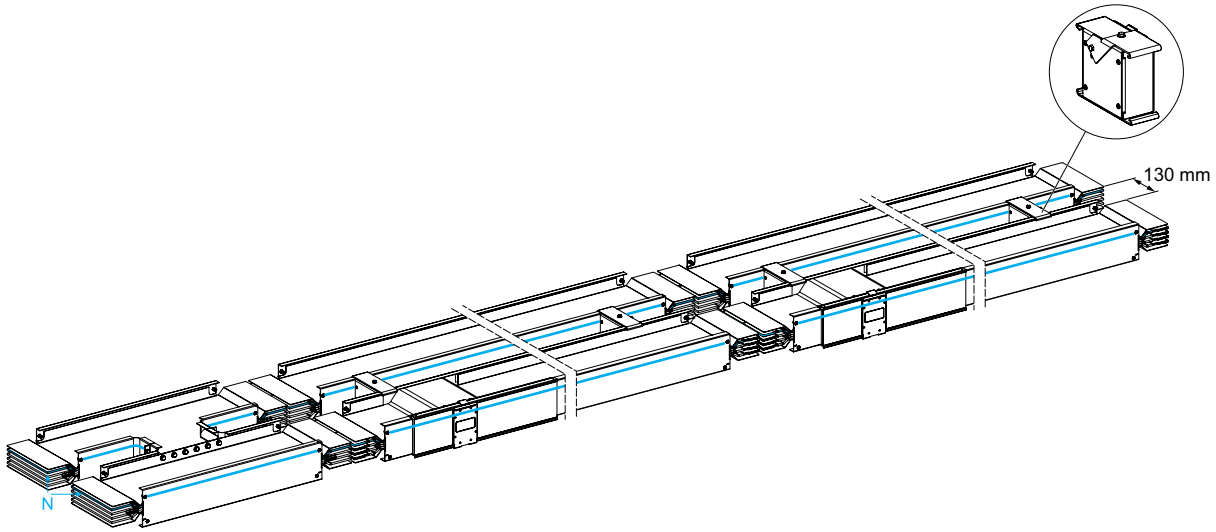

The current has to be re-balanced between the 2 runs in distribution applications.

DB429012-G

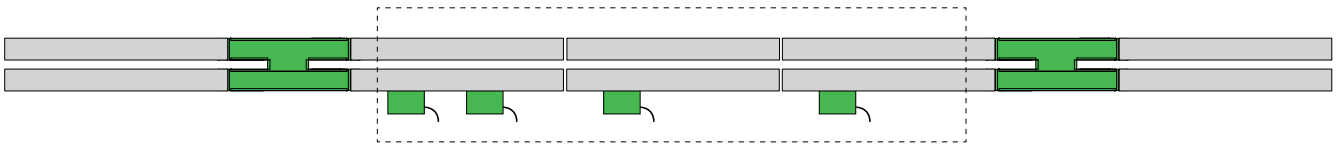

If the total load of a group of tap-off units is above 1600 A, then add bridges (edgewise H units) between the 2 runs.
Bridges have to be placed before and after the group.

Run components
IP55

Canalis KTC 1000 to 5000

Ordering

Complete the catalogue number by replacing "●●●●" by the rating.
Important:
■ add the dimensions of the selected component as a technical comment
Example: the catalogue number of an 1000 A feeder length, 3L + N + PE, 2450 mm long, is:
KTC1000ET42C, L = 2450
Rating

ET - Straight feeder lengths

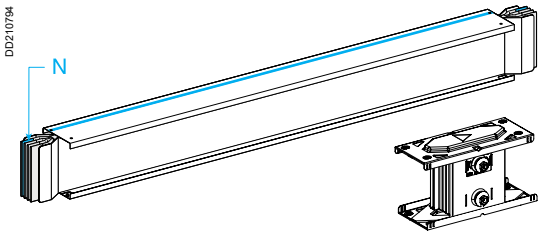

KTC●●●●ET●●●

Type	Length "L" (mm)	Cat. no.		
		3L + PE	3L + N + PE	3L + N + PER (1)
Fixed	2000	KTC●●●●ET320	KTC●●●●ET420	KTC●●●●ET520
	4000	KTC●●●●ET340	KTC●●●●ET440	KTC●●●●ET540
Made to measure	500 to 1500	KTC●●●●ET31A	KTC●●●●ET41A	KTC●●●●ET51A
	1501 to 1999	KTC●●●●ET32B	KTC●●●●ET42B	KTC●●●●ET52B
	2001 to 2500	KTC●●●●ET32C	KTC●●●●ET42C	KTC●●●●ET52C
	2501 to 3000	KTC●●●●ET33D	KTC●●●●ET43D	KTC●●●●ET53D
	3001 to 3500	KTC●●●●ET33E	KTC●●●●ET43E	KTC●●●●ET53E
	3501 to 3999	KTC●●●●ET33F	KTC●●●●ET43F	KTC●●●●ET53F

(1) To order the 3L + N + PER version with reinforced Isc, replace KTC●●●●ET5●● by KTC●●●●ET7●●.

KTC●●●●ET●●●

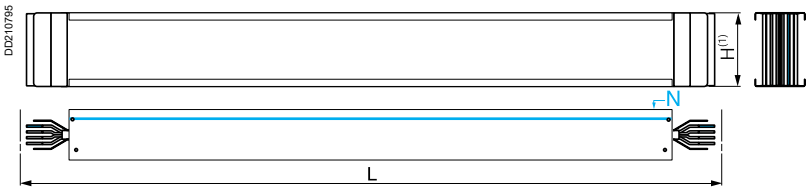

(1) See the "Trunking cross-section" table page 52.

ED - Straight lengths for KS plug-in tap-off units

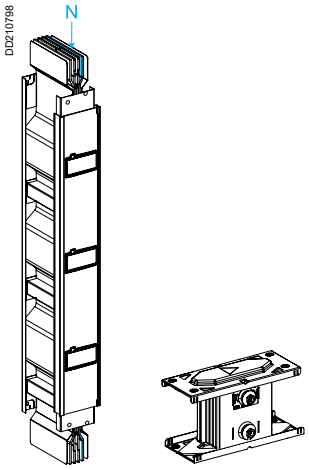

KTC●●●●ED●●●●

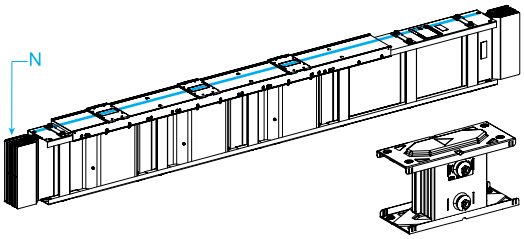

KTC●●●●ED●●●●

Type	Length "L" (mm)	Number of tap-offs	Cat. no.		
			3L + PE	3L + N + PE (2)	3L + N + PER (1)
Fixed	2000	1	KTC●●●●ED3201	KTC●●●●ED4201	KTC●●●●ED5201
		3	KTC●●●●ED3203	KTC●●●●ED4203	KTC●●●●ED5203
	4000	3	KTC●●●●ED3403	KTC●●●●ED4403	KTC●●●●ED5403
Made to measure	2500 to 3000	1	KTC●●●●ED3301	KTC●●●●ED4301	KTC●●●●ED5301
		2	KTC●●●●ED3302	KTC●●●●ED4302	KTC●●●●ED5302
	3001 to 3500	1	KTC●●●●ED3351	KTC●●●●ED4351	KTC●●●●ED5351
		3	KTC●●●●ED3353	KTC●●●●ED4353	KTC●●●●ED5353

(1) To order the 3L + N + PER version with reinforced Isc, replace KTC●●●●ED5●●● by KTC●●●●ED7●●●.
(2) To order the 3L + N + PE 2500 A and 3200 A version with reinforced Isc, replace KTC2500ED4●●● by KTC2500ED6●●● and KTC3200ED4●●● by KTC3200ED6●●●.

KTC●●●●ED●201

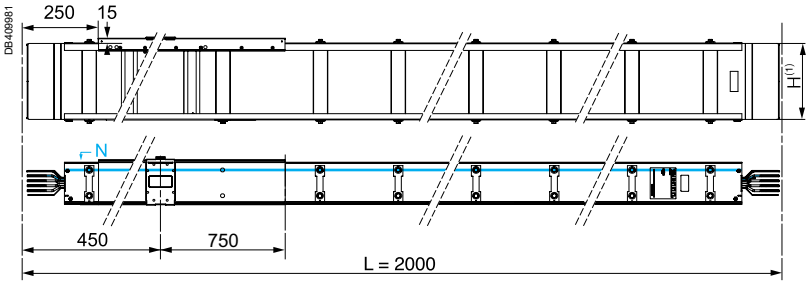

KTC●●●●ED●203

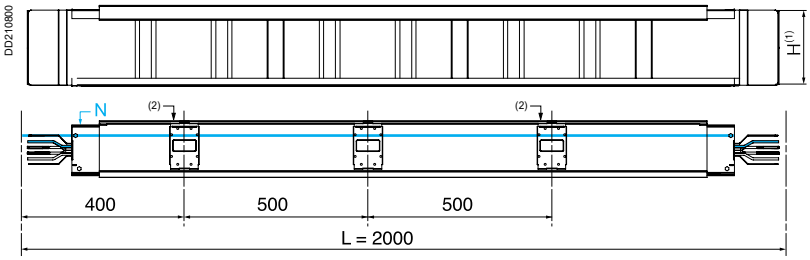

(1) See the "Trunking cross-section" table page 52.
(2) Tap-off units KTB0630●●● can not be installed at this outlet.

Canalis KTC 1000 to 5000

Straight lengths for KS plug-in tap-off units

KTC●●●●ED●403

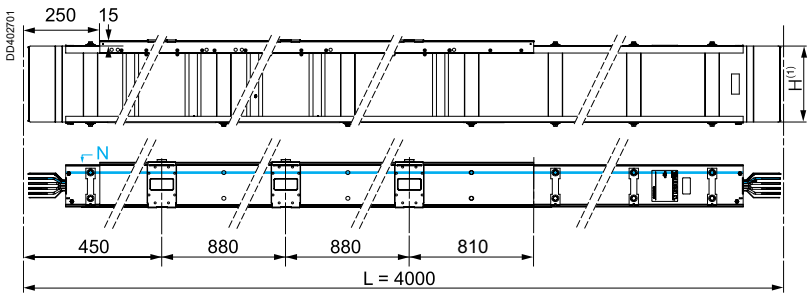

KTC●●●●ED●301

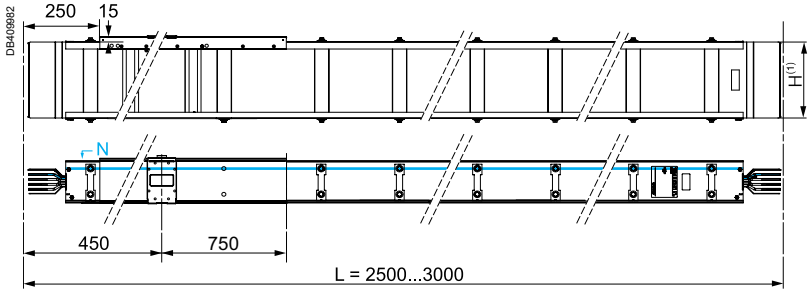

KTC●●●●ED●302

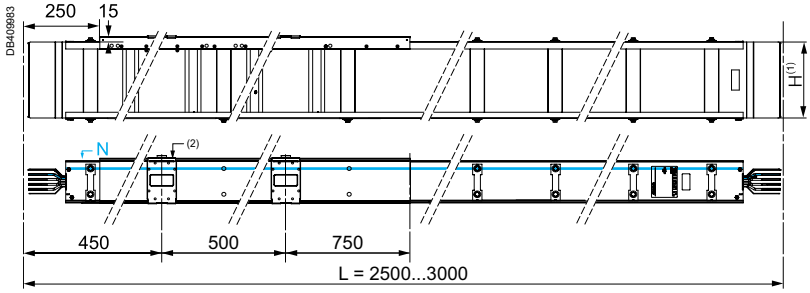

KTC●●●●ED●351

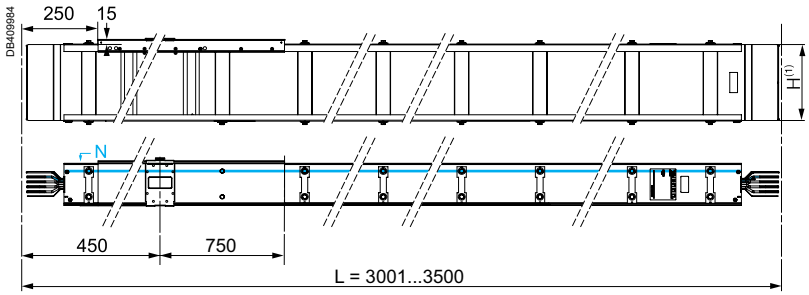

KTC●●●●ED●353

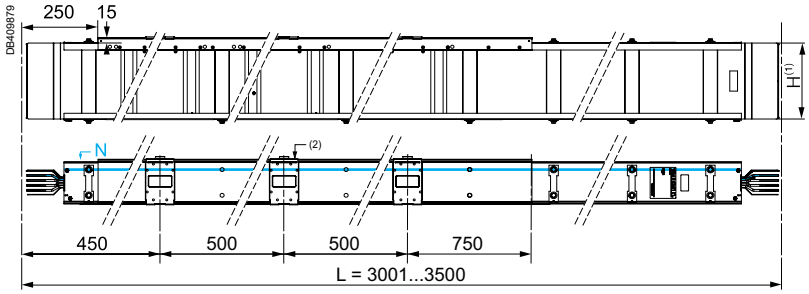

(1) See the "Trunking cross-section" table page 52.
(2) Tap-off units KTB0630●●● can not be installed at this outlet.

Run components
IP55

Canalis KTC 1000 to 5000

EB - Straight lengths for bolted tap-off units

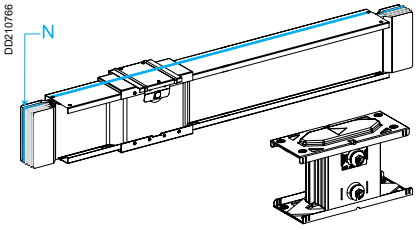

KTC●●●●EB●20

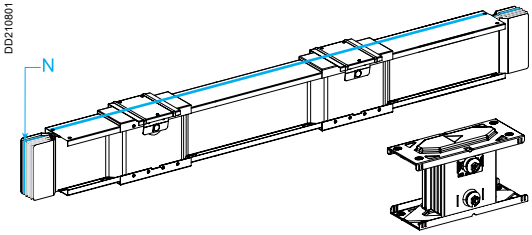

KTC●●●●EB●40

Type	Length "L" (mm)	Number of tap-offs	Cat. no.		
			3L + PE	3L + N + PE	3L + N + PER (1)
Fixed	2000	1	KTC●●●●EB320	KTC●●●●EB420	KTC●●●●EB520
	4000	2	KTC●●●●EB340	KTC●●●●EB440	KTC●●●●EB540

(1) To order the 3L + N + PER version with reinforced Isc, replace KTC●●●●EB5●● by KTC●●●●EB7●●.

KTC●●●●EB●20

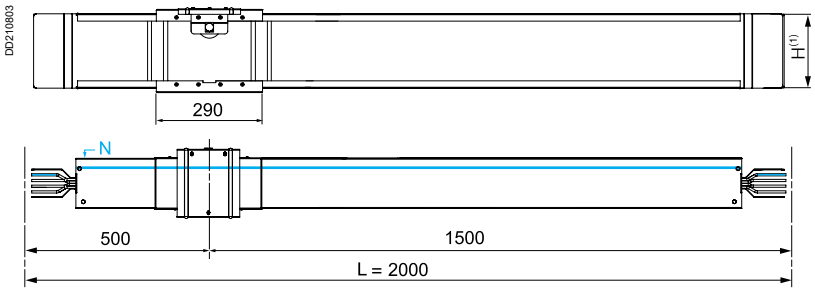

KTC●●●●EB●40

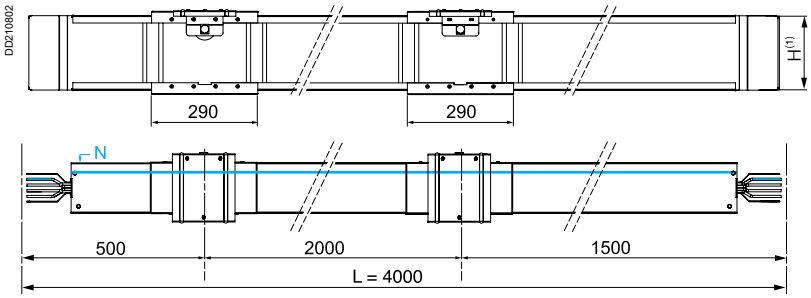

(1) See the "Trunking cross-section" table below.

Trunking cross-section

Rating (A)		1000	1350	1600	2000	2500	3200	4000	5000	6300
Weight (kg/m)	3L + PE	19	25	29	36	44	51	66	82	102
	3L + N + PE	23	31	35	45	55	64	84	104	128
	3L + N + PER	25	33	39	49	60	71	92	114	142

Height H (mm)
Width W (mm)

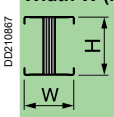

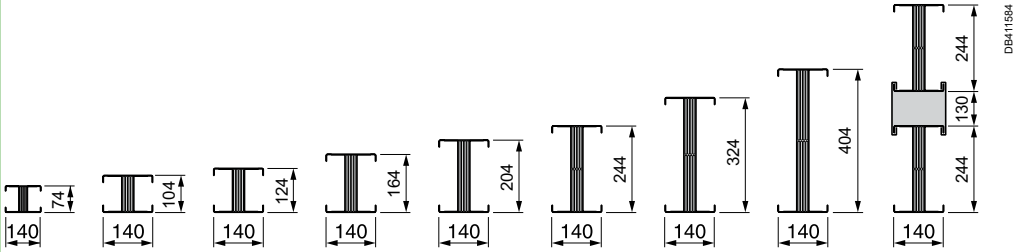

Canalis KTC 1000 to 5000

Ordering

Complete the catalogue number by replacing the "●●●●" with the rating.

Example: a transport section 1000 A, length 4 m.
Catalogue number for 3L + N + PE: **KTC1000EH440**.

EH - Straight sections with KH withdrawable tap-off units

Type	Length "L" (mm)	Number of tap-off units	Cat. no.(3)		
			3L + PE	3L + N + PE	3L + N + PER (2)
Fixed	2000	2	**KTC●●●●EH320**	**KTC●●●●EH420**	**KTC●●●●EH520**
	4000	3	**KTC●●●●EH340**	**KTC●●●●EH440**	**KTC●●●●EH540**

(1) See the "Trunking cross-section" table opposite.

(2) To order the 3L + N + PER version with reinforced Isc, replace KTC●●●●EH5●● by KTC●●●●EH7●●.

(3) Not available for KTC6300.

DB402102

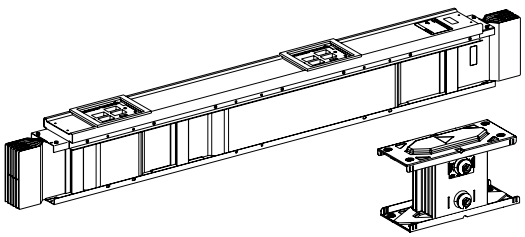

KTC●●●●EH●20

DB402025

KTC●●●●EH●20

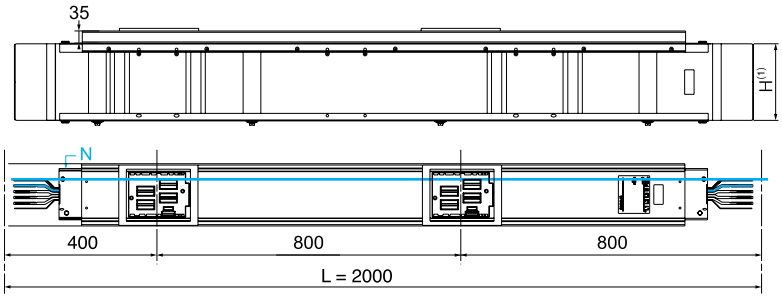

DB406461

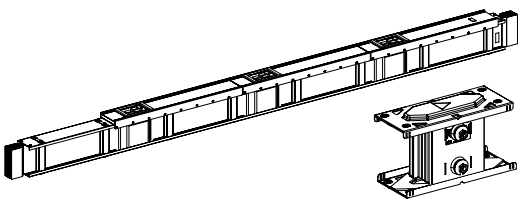

KTC●●●●EH●40

DB402127

KTC●●●●EH●40

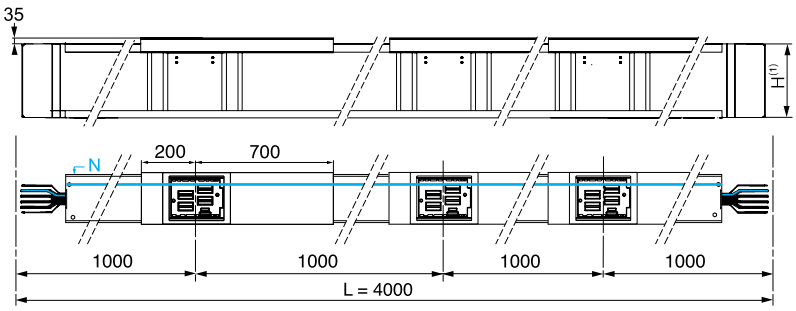

Run components
IP55

Canalis KTC 6300

ET - Straight feeder lengths

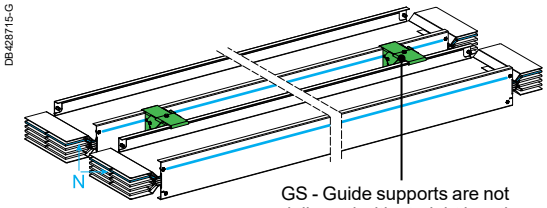

KTC6300ET●●●

GS - Guide supports are not delivered with straight lengths.

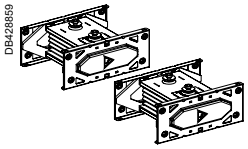

Type	Length "L" (mm)	Cat. no.		
		3L + PE	3L + N + PE	3L + N + PER (1)
Fixed	2000	KTC6300ET320	KTC6300ET420	KTC6300ET520
	4000	KTC6300ET340	KTC6300ET440	KTC6300ET540
Made to measure	500 to 1500	KTC6300ET31A	KTC6300ET41A	KTC6300ET51A
	1501 to 1999	KTC6300ET32B	KTC6300ET42B	KTC6300ET52B
	2001 to 2500	KTC6300ET32C	KTC6300ET42C	KTC6300ET52C
	2501 to 3000	KTC6300ET33D	KTC6300ET43D	KTC6300ET53D
	3001 to 3500	KTC6300ET33E	KTC6300ET43E	KTC6300ET53E
	3501 to 3999	KTC6300ET33F	KTC6300ET43F	KTC6300ET53F

(1) To order the 3L + N + PER version with reinforced Isc, replace KTC6300ET5●● by KTC6300ET7●●.

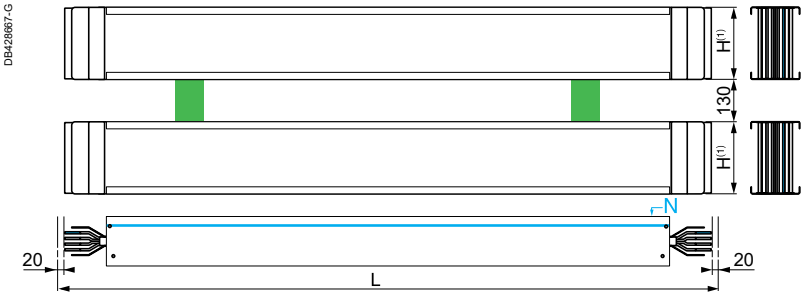

(1) See the "Trunking cross-section" table page 52.

ED - Straight lengths for KS plug-in tap-off units

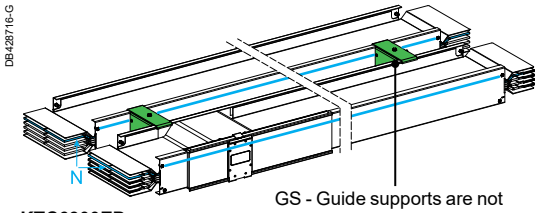

KTC6300ED●●●

GS - Guide supports are not delivered with straight lengths.

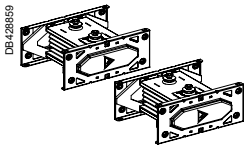

Type	Length "L" (mm)	Number of tap-offs	Cat. no.		
			3L + PE	3L + N + PE (2)	3L + N + PER (1)
Fixed	2000	3	KTC6300ED3203	KTC6300ED4203	KTC6300ED5203
	4000	3	KTC6300ED3403	KTC6300ED4403	KTC6300ED5403

(1) To order the 3L + N + PER version with reinforced Isc, replace KTC6300ED5●●3 by KTC6300ED7●●3.

KTC●●●●ED●203

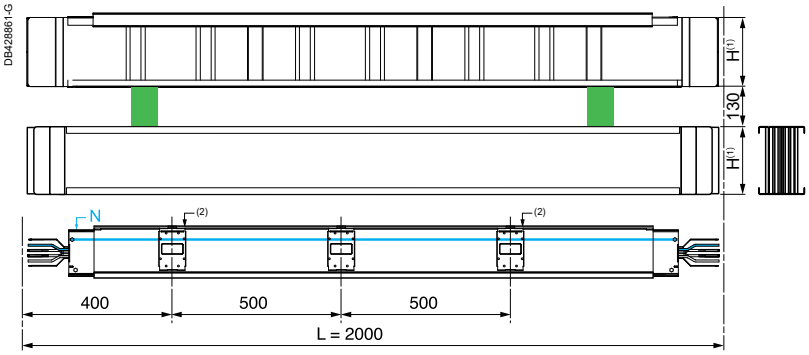

KTC●●●●ED●403

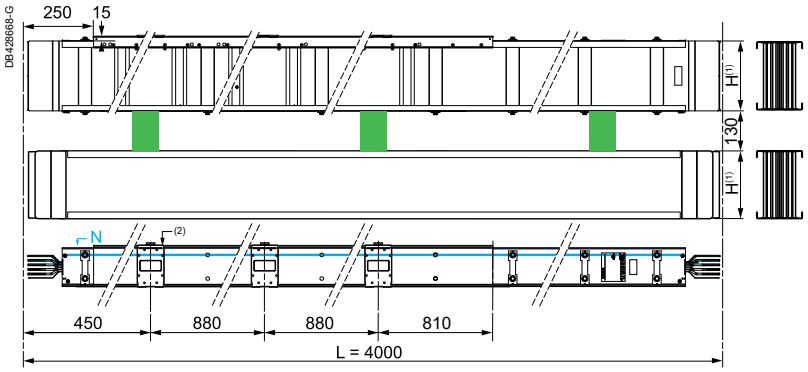

(1) See the "Trunking cross-section" table page 52.
(2) Tap-off units KTB630●●●●●● can not be installed at this outlet.

Canalis KTC 6300

EB - Straight lengths for bolted tap-off units

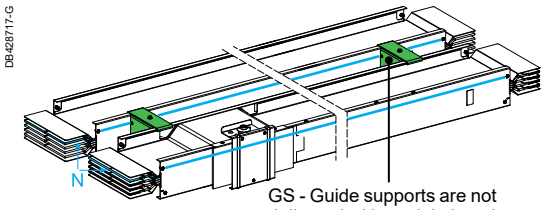

KTC6300EB●●●

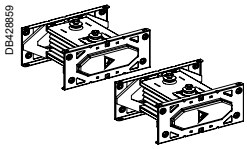

Type	Length "L" (mm)	Number of tap-offs	Cat. no.		
			3L + PE	3L + N + PE	3L + N + PER (1)
Fixed	2000	1	KTC6300EB320	KTC6300EB420	KTC6300EB520
	4000	2	KTC6300EB340	KTC6300EB440	KTC6300EB540

(1) To order the 3L + N + PER version with reinforced Isc, replace KTC6300EB5●● by KTC6300EB7●●.

KTC6300EB●20

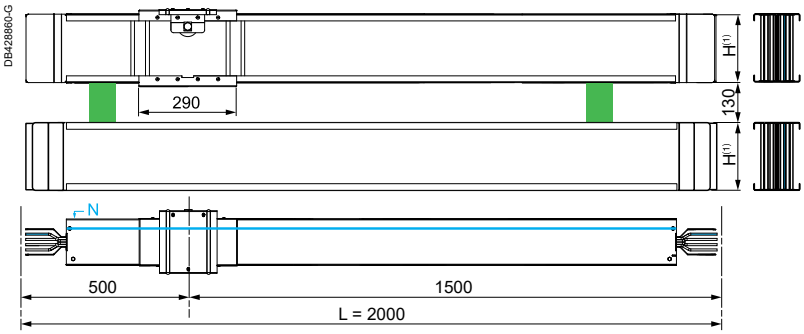

KTC6300EB●40

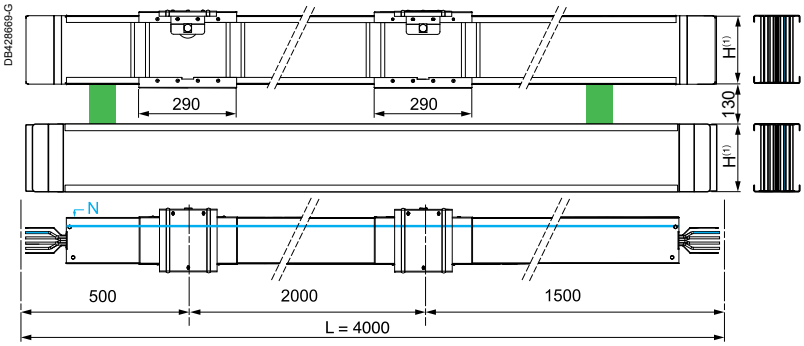

(1) See the "Trunking cross-section" table page 52.

Canalis KTC 1000 to 5000

Ordering

Complete the catalogue number by replacing "●●●●" by the rating.
Important:
■ add the dimensions of the selected component as a technical comment.

Example: the catalogue number of a 1350 A straght expansion unit, 3L + PE, 1000 mm long, is:
KTC1350DB310
Rating

DB - Straight expansion unit

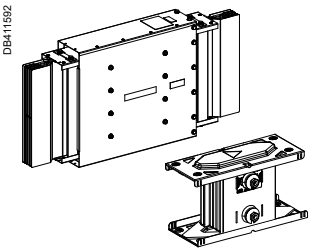

KTC●●●●DB●10

Type	Length "L" (mm)	Cat. no.		
		3L + PE	3L + N + PE	3L + N + PER (1)
Fixed	1000	KTC●●●●DB310	KTC●●●●DB410	KTC●●●●DB510

(1) To order the 3L + N + PER version with reinforced Isc, replace KTC●●●●DB510 by KTC●●●●DB710.

KTC●●●●DB●10

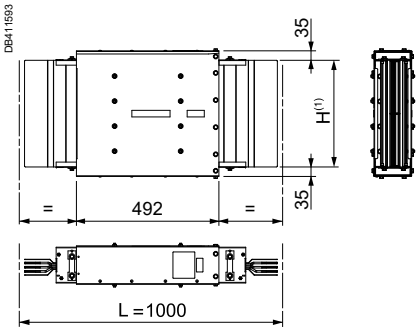

(1) See the "Trunking cross-section" table page 58.

TN - Neutral crossover length

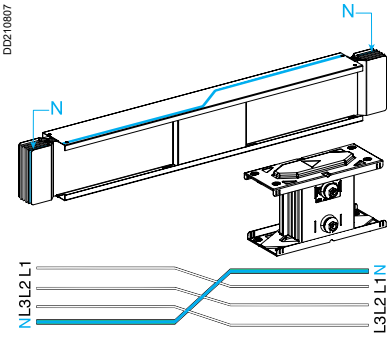

KTC●●●●TN●10

Type	Length "L" (mm)	Cat. no.
		3L + N + PE
Fixed	1000	KTC●●●●TN410

KTC●●●●TN●10

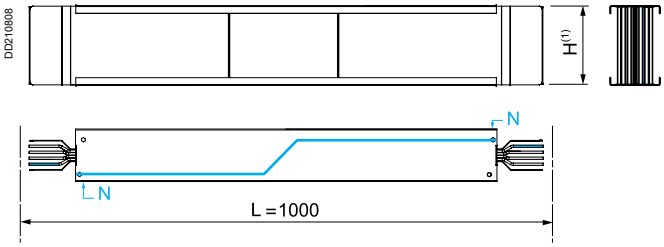

(1) See the "Trunking cross-section" table page 58.

TP - Phase crossover length

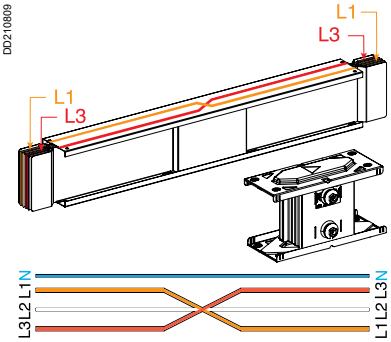

KTC●●●●TP●10

Type	Length "L" (mm)	Cat. no.
		3L + N + PE
Fixed	1000	KTC●●●●TP410

KTC●●●●TP●10

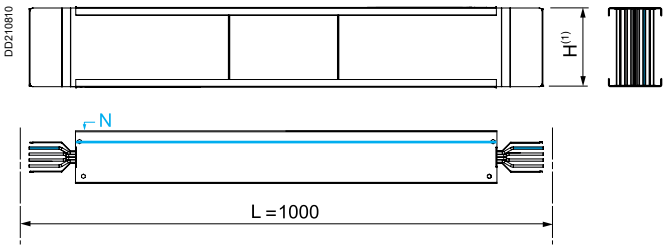

(1) See the "Trunking cross-section" table page 58.

Canalis KTC 6300

DB - Straight expansion unit

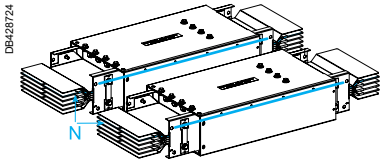

KTC6300DB●10

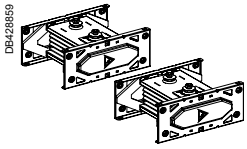

Type	Length "L" (mm)	Cat. no.		
		3L + PE	3L + N + PE	3L + N + PER (1)
Fixed	1000	KTC6300DB310	KTC6300DB410	KTC6300DB510

(1) To order the 3L + N + PER version with reinforced Isc, replace KTC6300DB510 by KTC6300DB710.

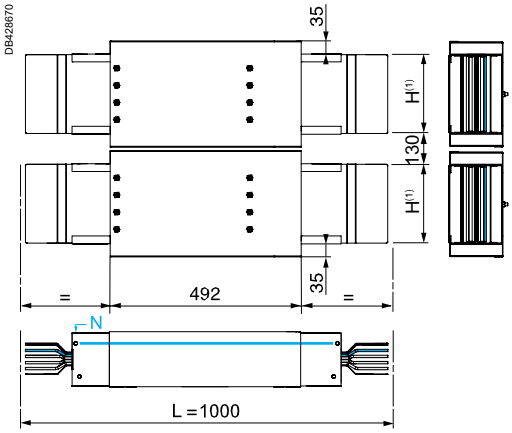

(1) See the "Trunking cross-section" table page 58.

TN - Neutral crossover length

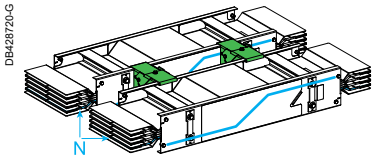

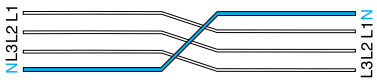

KTC6300TN410

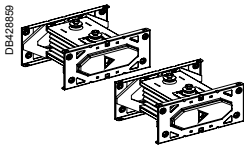

Type	Length "L" (mm)	Cat. no. (1)
		3L + N + PE
Fixed	1000	KTC6300TN410

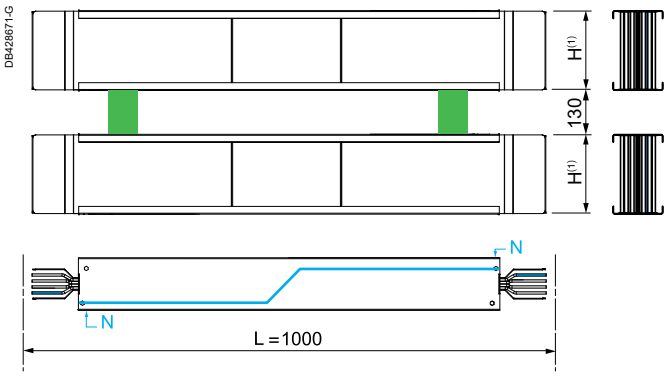

(1) See the "Trunking cross-section" table page 58.

TP - Phase crossover length

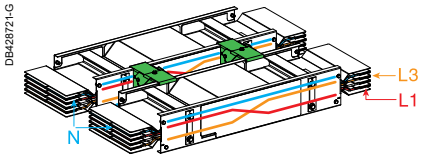

KTC6300TP410

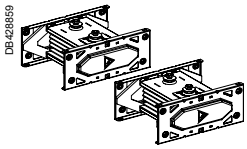

Type	Length "L" (mm)	Cat. no. (1)
		3L + N + PE
Fixed	1000	KTC6300TP410

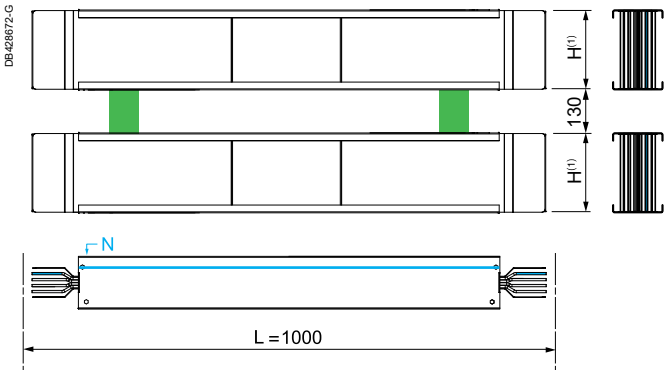

(1) See the "Trunking cross-section" table page 58.

Additional run components
IP55

Canalis KTC 1000 to 6300

YA - Additional jointing units

DD210811-G

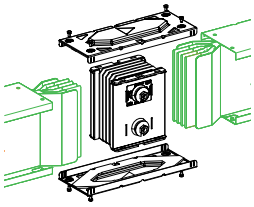

KTC●●●●YA●

Type	Cat. no. (2)			
	3L + PE	3L + N + PE	3L + N + PER	
Version code (1)	3	4	5	7
Jointing unit (3)	KTC●●●●YA3	KTC●●●●YA4	KTC●●●●YA5	KTC●●●●YA7

(1) See catalogue-number coding page 48.
(2) References KTC6300YA● are made of 2 references KTC3200YA●.
(3) YA is not applicable for Fire rated busway elements. refer page 71 for fire rated joining units.

KTC●●●●YA●

DD210812-G

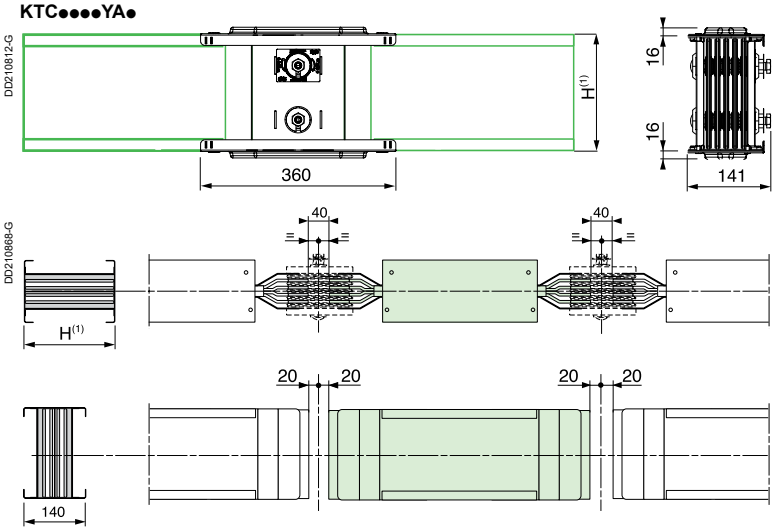

(1) See the "Trunking cross-section" table below.

FA - End covers

DD205887-G

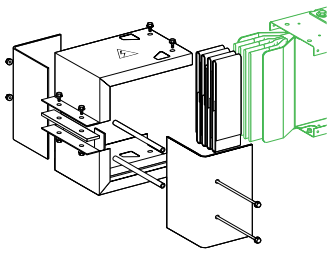

KTB0●●●FA

Type	Rating of the trunking (A)	Height H of the trunking (mm)	Cat. no.
End cover	1000	74	KTB0074FA
	1350	104	KTB0104FA
	1600	124	KTB0124FA
	2000	164	KTB0164FA
	2500	204	KTB0204FA
	3200	244	KTB0244FA
	4000	324	KTB0324FA
	5000	404	KTB0404FA
	6300 (2)	622	KTB0622FA

KTB0●●●FA

DD210814n

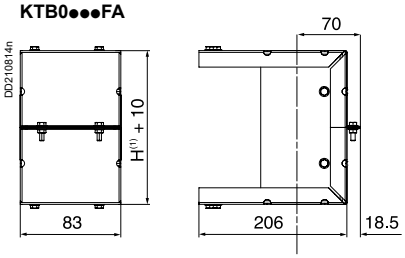

(1) See the "Trunking cross-section" table below.
(2) The reference KTB0622FA is made of 2 references KTB0244FA.

Trunking cross-section

Rating (A)		1000	1350	1600	2000	2500	3200	4000	5000	6300
Weight (kg/m)	3L + PE	19	25	29	36	44	51	66	82	102
	3L + N + PE	23	31	35	45	55	64	84	104	128
	3L + N + PER	25	33	39	49	60	71	92	114	142

Height H (mm)
Width W (mm)

DD210867

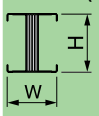

DB411584

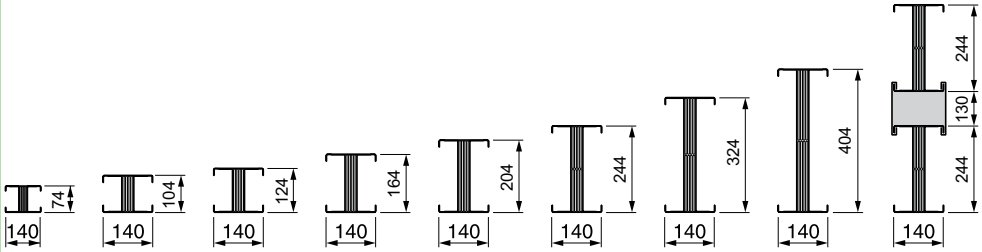

Canalis KTC 6300

GS - Guide support

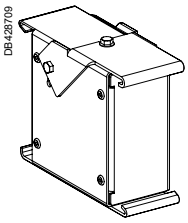

KTC6300GS1

2 guide supports[1] are required to linked all KTC3200 elements together in order to create the KTC6300 run.

(1) 3 guide supports are required for 4 m straight length, 1 for straight end feed units ER1. These guide supports carry the label KTC6300A.

Description	Cat. no.	Weight (kg)
1 guide support	**KTC6300GS1**	0.6

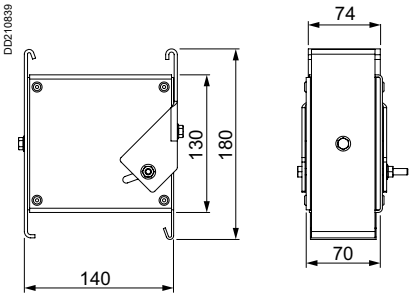

HC - Edgewise H

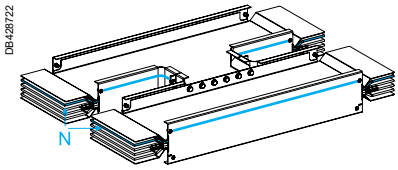

KTC6300HC●10

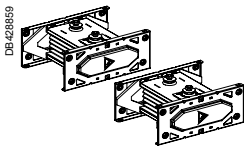

Type	Length "L" (mm)	Cat. no.		
		3L + PE	3L + N + PE	3L + N + PER [1]
Fixed	1000	**KTC6300HC310**	**KTC6300HC410**	**KTC6300HC510**

(1) To order the 3L + N + PER version with reinforced Isc, replace KTC6300HC510 by KTC6300HC710.

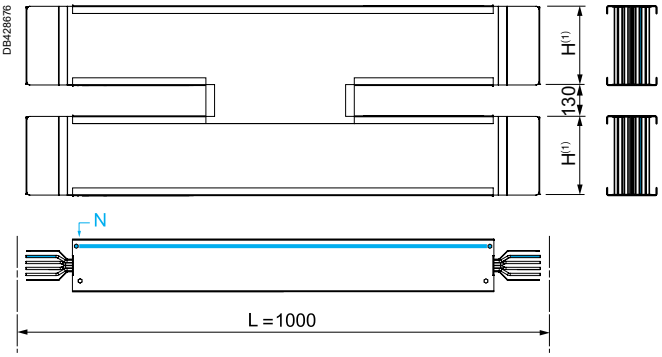

(1) See the "Trunking cross-section" table page 58.

Elbow components for changing direction
IP55

Canalis KTC 1000 to 6300

Ordering

Complete the catalogue number by replacing "●●●●" by the rating.
Important:
■ add the dimensions of the selected unit as a technical comment.

Example: the catalogue number of a 1250 A made to measure end feed unit, N2, 3L + N + PE, 235 mm long and with between centres J, K and M = 170 mm, is:
KTC1350ER42, A = 235, J = 170, K = 170 and M = 170.
Rating

LP - Flat elbows

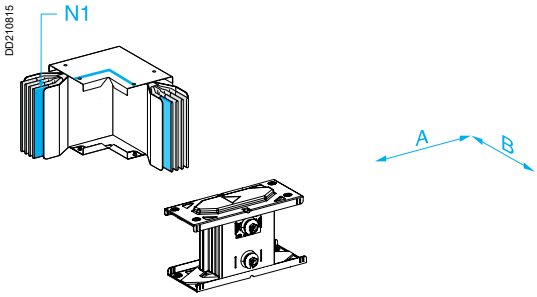

KTC●●●●LP●●1

Type	Position of neutral	Cat. no.		
		3L + PE	3L + N + PE	3L + N + PER (1)
2 fixed branches	N1	KTC●●●●LP3A1	KTC●●●●LP4A1	KTC●●●●LP5A1
	N2	KTC●●●●LP3A2	KTC●●●●LP4A2	KTC●●●●LP5A2
1 made to measure short branche	N1	KTC●●●●LP3B1	KTC●●●●LP4B1	KTC●●●●LP5B1
	N2	KTC●●●●LP3B2	KTC●●●●LP4B2	KTC●●●●LP5B2
1 made to measure long branche	N1	KTC●●●●LP3D1	KTC●●●●LP4D1	KTC●●●●LP5D1
	N2	KTC●●●●LP3D2	KTC●●●●LP4D2	KTC●●●●LP5D2
2 made to measure branches	N1	KTC●●●●LP3E1	KTC●●●●LP4E1	KTC●●●●LP5E1
	N2	KTC●●●●LP3E2	KTC●●●●LP4E2	KTC●●●●LP5E2

(1) To order the 3L + N + PER version with reinforced Isc, replace KTC●●●●LP5●● by KTC●●●●LP7●●.

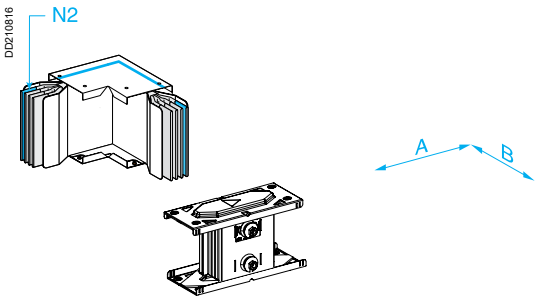

KTC●●●●LP●●2

KTC●●●●LP●●●

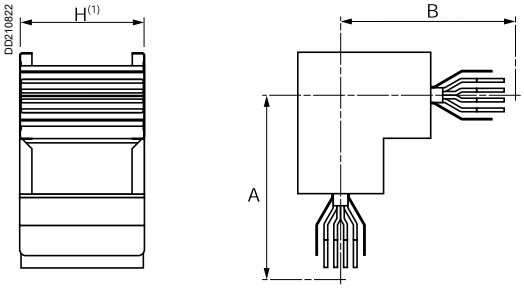

(1) See the "Trunking cross-section" table page 65.

Dimensions

Type	Rating (A)	Dimensions (mm)	
		A	B
2 fixed branches	1000, 1350, 1600, 2000, 2500, 3200, 4000, 5000, 6300	300	300
1 made to measure short branche	1000, 1350, 1600, 2000, 2500, 3200, 4000, 5000, 6300	300	301 to 799
		301 to 799	300
1 made to measure long branche	1000, 1350, 1600	300	800 to 1000
		800 to 1000	300
	2000, 2500, 3200	300	800 to 1100
		800 to 1100	300
	4000, 5000	300	800 to 1400
		800 to 1400	300
	6300	300	800 to 1100
		800 to 1100	300
2 made to measure branches	1000, 1350, 1600	301 to 600	301 to 1000
		301 to 1000	301 to 600
	2000, 2500, 3200	301 to 600	301 to 1100
		301 to 1100	301 to 600
	4000, 5000, 6300	301 to 600	301 to 1400
		301 to 1400	301 to 600
	6300	301 to 600	301 to 1100
		301 to 1100	301 to 600

Elbow components for changing direction
IP55

Canalis KTC 1000 to 5000

LP●C - Flat elbows with made to measure angles

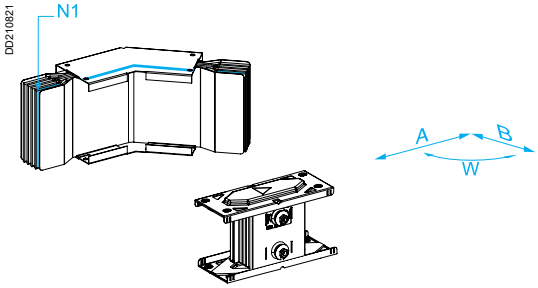

KTC●●●●LP●C1

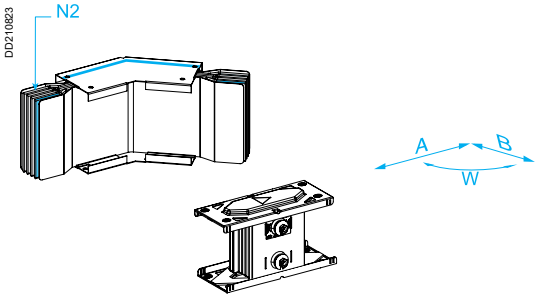

KTC●●●●LP●C2

Type	Position of neutral	Cat. no.		
		3L + PE	3L + N + PE	3L + N + PER (1)
Made to measure angle	N1	KTC●●●●LP3C1	KTC●●●●LP4C1	KTC●●●●LP5C1
	N2	KTC●●●●LP3C2	KTC●●●●LP4C2	KTC●●●●LP5C2

(1) To order the 3L + N + PER version with reinforced Isc, replace KTC●●●●LP5C● by KTC●●●●LP7C●.

KTC●●●●LP●C●

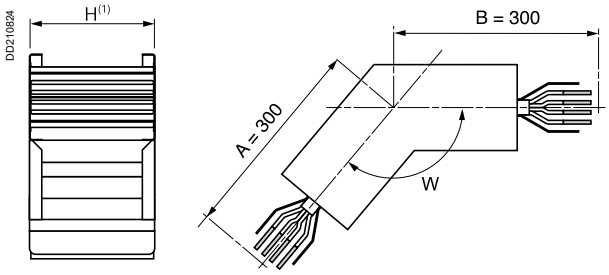

(1) See the "Trunking cross-section" table page 65.

Dimensions

Type	Rating (A)	Dimensions (mm)		
		A	B	W
Made to measure	All	300	300	91° to 179°

LC - Edgewise elbows

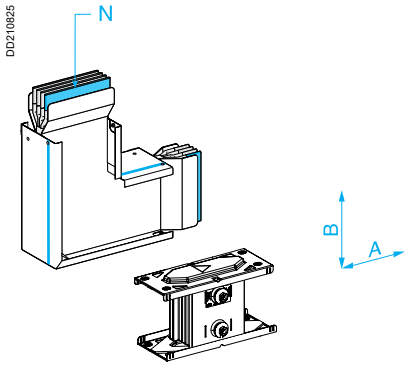

KTC●●●●LC●●

Type	Cat. no.		
	3L + PE	3L + N + PE	3L + N + PER (1)
2 fixed branches	KTC●●●●LC3A	KTC●●●●LC4A	KTC●●●●LC5A
1 made to measure short branche	KTC●●●●LC3B	KTC●●●●LC4B	KTC●●●●LC5B
1 made to measure long branche	KTC●●●●LC3D	KTC●●●●LC4D	KTC●●●●LC5D
2 made to measure branches	KTC●●●●LC3E	KTC●●●●LC4E	KTC●●●●LC5E

(1) To order the 3L + N + PER version with reinforced Isc, replace KTC●●●●LC5● by KTC●●●●LC7●.

KTC●●●●LC●●

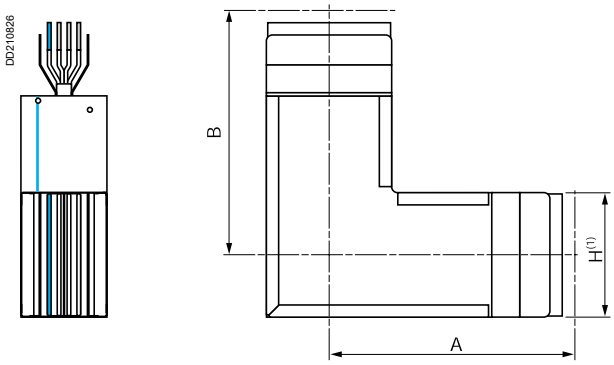

(1) See the "Trunking cross-section" table page 65 and dimensions page 64.

Elbow components for changing direction
IP55

Canalis KTC 6300

LP - Elbows

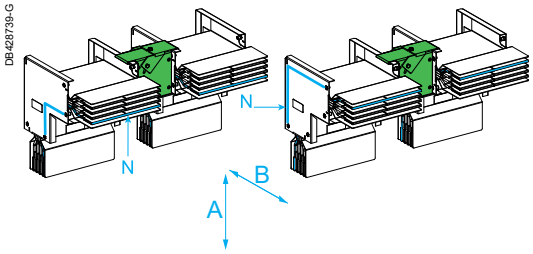

KTC6300LP●●1 KTC6300LP●●2

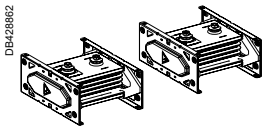

Type	Position of neutral	Cat. no.		
		3L + PE	3L + N + PE	3L + N + PER (1)
2 fixed branches	N1	KTC6300LP3A1	KTC6300LP4A1	KTC6300LP5A1
	N2	KTC6300LP3A2	KTC6300LP4A2	KTC6300LP5A2
1 made to measure short branche	N1	KTC6300LP3B1	KTC6300LP4B1	KTC6300LP5B1
	N2	KTC6300LP3B2	KTC6300LP4B2	KTC6300LP5B2
1 made to measure long branche	N1	KTC6300LP3D1	KTC6300LP4D1	KTC6300LP5D1
	N2	KTC6300LP3D2	KTC6300LP4D2	KTC6300LP5D2
2 made to measure branches	N1	KTC6300LP3E1	KTC6300LP4E1	KTC6300LP5E1
	N2	KTC6300LP3E2	KTC6300LP4E2	KTC6300LP5E2

(1) To order the 3L + N + PER version with reinforced Isc, replace KTC6300LP5●● by KTC6300LP7●●.

2 x KTC3200LP●●●

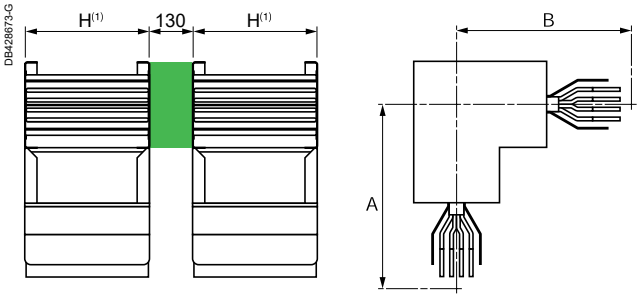

(1) See the "Trunking cross-section" table page 65 and dimensions page 60.

LP●C - Flat elbows with made to measure angles

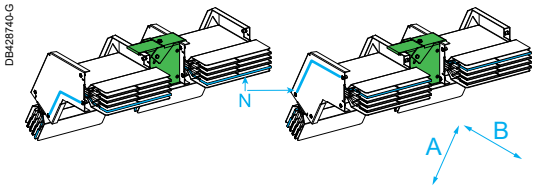

KTC6300LP●C1 KTC6300LP●C2

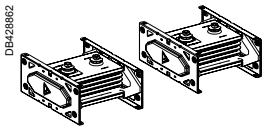

Type	Position of neutral	Cat. no. (2)		
		3L + PE	3L + N + PE	3L + N + PER (1)
Made to measure angle	N1	KTC6300LP3C1	KTC6300LP4C1	KTC6300LP5C1
	N2	KTC6300LP3C2	KTC6300LP4C2	KTC6300LP5C2

(1) To order the 3L + N + PER version with reinforced Isc, replace KTC6300LP5C● by KTC6300LP7C●.

2 x KTC3200LP●●●

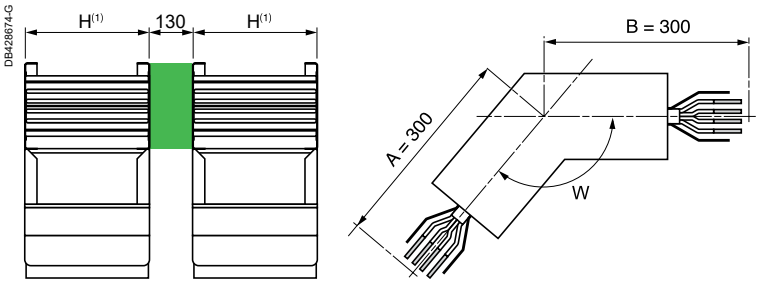

(1) See the "Trunking cross-section" table page 65.

Dimensions

Rating (A)	Dimensions (mm)		
	A	B	W
6300	300	300	91° to 179°

Elbow components for changing direction
IP55

Canalis KTC 6300

LC - Edgewise elbows

DB428741-G

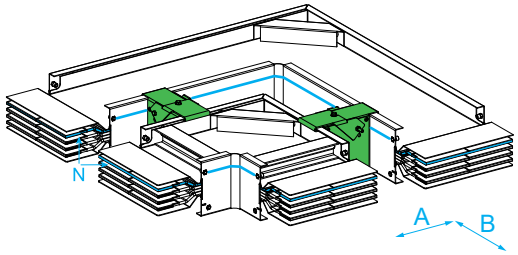

KTC6300LC●●●

DB428862

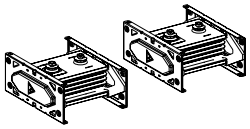

Type	Cat. no. (2)		
	3L + PE	3L + N + PE	3L + N + PER (1)
2 fixed branches	KTC6300LC3A	KTC6300LC4A	KTC6300LC5A
1 made to measure short branche	KTC6300LC3B	KTC6300LC4B	KTC6300LC5B

(1) To order the 3L + N + PER version with reinforced Isc, replace KTC6300LC5● by KTC6300LC7●.

2 x KTC3200LC●●●

DB428675-G

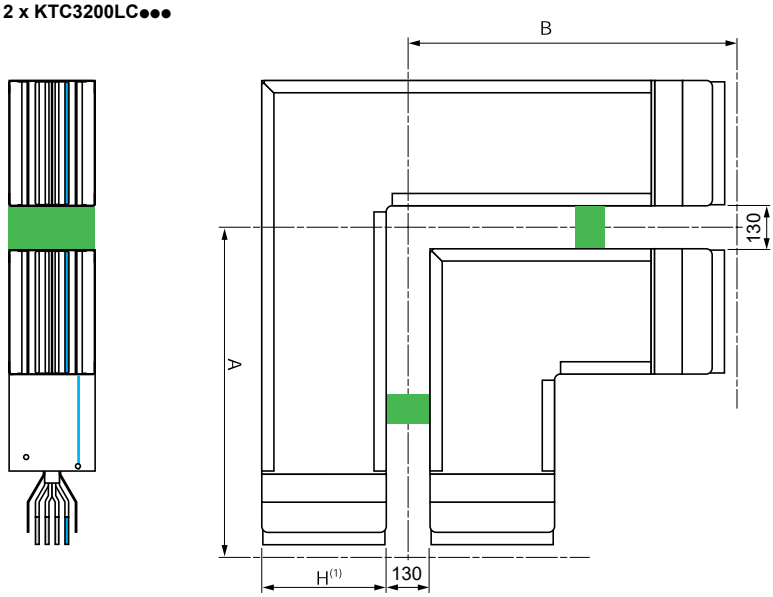

(1) See the "Trunking cross-section" table page 65 and dimensions page 64.

Elbow components for changing direction
IP55

Canalis KTC 1000 to 6300

Dimensions

Type	Rating (A)	Dimensions (mm)	
		A	B
2 fixed branches	1000	275	275
	1350	290	290
	1600	300	300
	2000	320	320
	2500	340	340
	3200	360	360
	4000	400	400
	5000	440	440
	6300	548	548
1 made to measure short branche	1000	275	276 to 774
		276 to 774	275
	1350	290	291 to 789
		291 to 789	290
	1600	300	301 to 799
		301 to 799	300
	2000	320	321 to 819
		321 to 819	320
	2500	340	341 to 839
		341 to 839	340
	3200	360	361 to 859
		361 to 859	360
	4000	400	401 to 899
		401 to 899	400
	5000	440	441 to 939
		441 to 939	440
	6300	548	549 to 1047
		549 to 1047	548
1 made to measure long branche	1000	275	775 to 1000
		775 to 1000	275
	1350	290	790 to 1000
		790 to 1000	290
	1600	300	800 to 1000
		800 to 1000	300
	2000	320	820 to 1100
		820 to 1100	320
	2500	340	840 to 1100
		840 to 1100	340
	3200	360	860 to 1100
		860 to 1100	360
	4000	400	900 to 1400
		900 to 1400	400
	5000	440	940 to 1400
		940 to 1400	440
2 made to measure branches	1000	276 to 745	276 to 1000
		276 to 1000	276 to 745
	1350	291 to 730	291 to 1000
		291 to 1000	291 to 730
	1600	301 to 720	301 to 1000
		301 to 1000	301 to 720
	2000	321 to 700	321 to 1100
		321 to 1100	321 to 700
	2500	341 to 680	341 to 1100
		341 to 1100	341 to 680
	3200	361 to 660	361 to 1100
		361 to 1100	361 to 660
	4000	401 to 620	401 to 1400
		401 to 1400	401 to 620
	5000	441 to 580	441 to 1400
		441 to 1400	441 to 580

Elbow components for changing direction
IP55

Canalis KTC 1000 to 5000

TC - Edgewise tee

DD210819

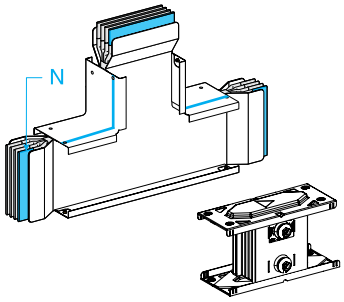

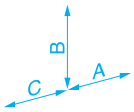

KTC●●●●TC●

Type	Cat. no. (2)		
	3L + PE	3L + N + PE	3L + N + PER (1)
Fixed	**KTC●●●●TC3**	**KTC●●●●TC4**	**KTC●●●●TC5**

(1) To order the 3L + N + PER version with reinforced Isc, replace KTC●●●●TC5 by KTC●●●●TC7.

(2) Not available for KTC6300.

KTC●●●●TC●

DD210820

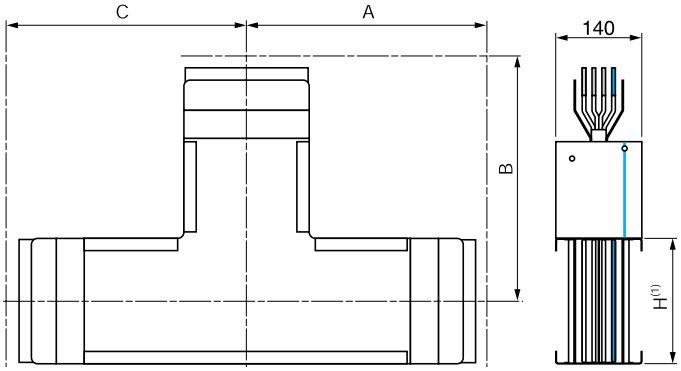

(1) See the "Trunking cross-section" table below.

Dimensions

Type	Rating (A)	Dimensions (mm)		
		A	B	C
Fixed	1000	275	275	275
	1350	290	290	290
	1600	300	300	300
	2000	320	320	320
	2500	340	340	340
	3200	360	360	360
	4000	400	400	400
	5000	440	440	440

Trunking cross-section

Rating (A)		1000	1350	1600	2000	2500	3200	4000	5000	6300
Weight (kg/m)	3L + PE	19	25	29	36	44	51	66	82	102
	3L + N + PE	23	31	35	45	55	64	84	104	128
	3L + N + PER	25	33	39	49	60	71	92	114	142

Height H (mm)
Width W (mm)

DD210867

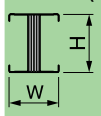

DB411584

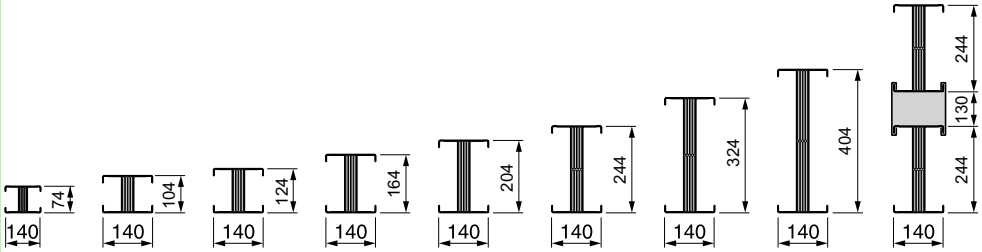

Zed components for changing direction
IP55

Canalis KTC 1000 to 5000

Ordering

Complete the catalogue number by replacing "●●●●" by the rating.
Important:
■ add the dimensions of the selected component as a technical comment.

Example: the catalogue number of a 1600 A edgewise zed unit, N2, 3L + N + PE with dimensions A = 300 mm, B = 450 mm, C = 300 mm is:
KTC1600ZC42, A = 300, B = 450, C = 300.
Rating

ZP - Flat zed units

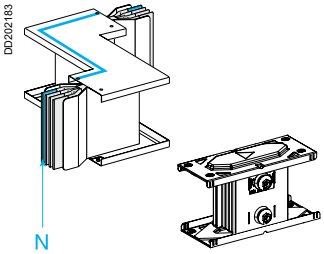

KTC●●●●ZP●

Type	Cat. no.		
	3L + PE	3L + N + PE	3L + N + PER (1)
Made to measure	KTC●●●●ZP3	KTC●●●●ZP4	KTC●●●●ZP5

(1) To order the 3L + N + PER version with reinforced Isc, replace KTC●●●●ZP5 by KTC●●●●ZP7.

KTC●●●●ZP●

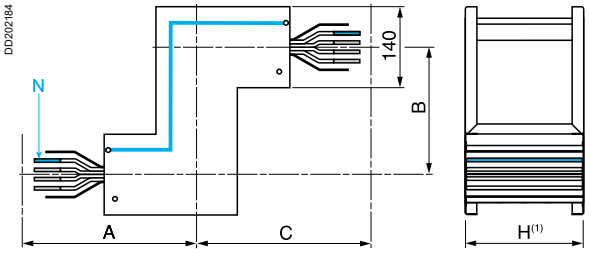

(1) See the "Trunking cross-section" page 68.

Dimensions

Rating (A)	Dimensions (mm)		
	A	B	C
All	300	130 to 599	300

ZC - Edgewise zed units

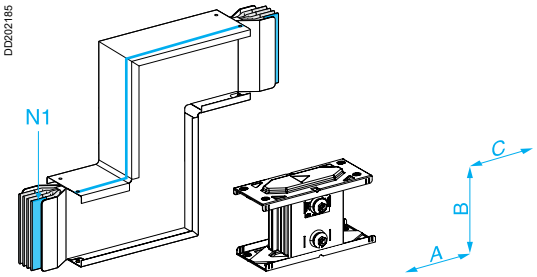

KTC●●●●ZC●1

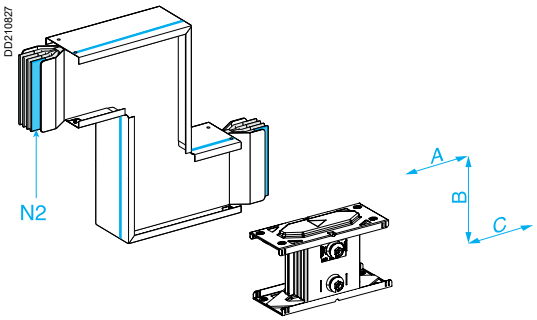

KTC●●●●ZC●2

Type	Position of neutral	Cat. no.		
		3L + PE	3L + N + PE	3L + N + PER (1)
Made to measure	N1	KTC●●●●ZC31	KTC●●●●ZC41	KTC●●●●ZC51
	N2	KTC●●●●ZC32	KTC●●●●ZC42	KTC●●●●ZC52

(1) To order the 3L + N + PER version with reinforced Isc, replace KTC●●●●ZC5● by KTC●●●●ZC7●.

KTC●●●●ZC●●

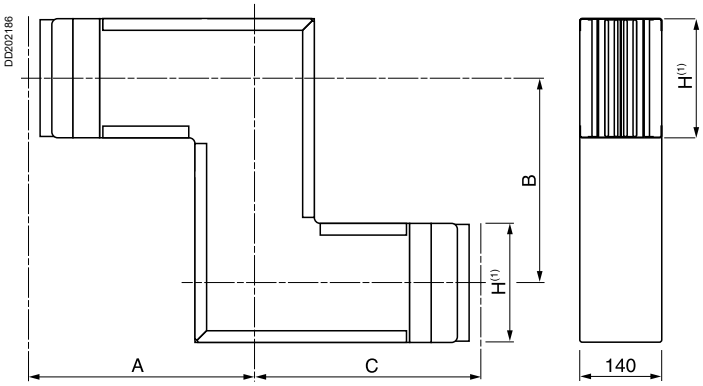

(1) See the "Trunking cross-section" page 68.

Dimensions

Rating (A)	Dimensions (mm)		
	A	B	C
1000	275	90 to 549	275
1350	290	90 to 579	290
1600	300	90 to 599	300
2000	320	90 to 639	320
2500	340	90 to 679	340
3200	360	90 to 719	360
4000	400	90 to 799	400
5000	440	90 to 879	440

Zed components for changing direction
IP55

Canalis KTC 6300

ZP - Flat zed units

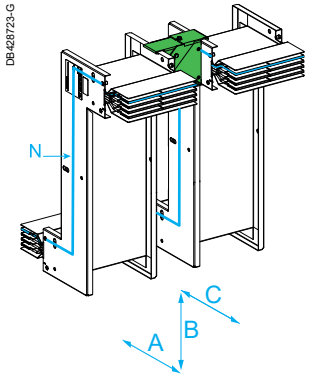

KTC6300ZP●

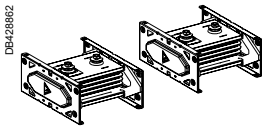

Type	Cat. no.		
	3L + PE	3L + N + PE	3L + N + PER (1)
Made to measure	KTC6300ZP3	KTC6300ZP4	KTC6300ZP5

(1) To order the 3L + N + PER version with reinforced Isc, replace KTC6300ZP5 by KTC6300ZP7.

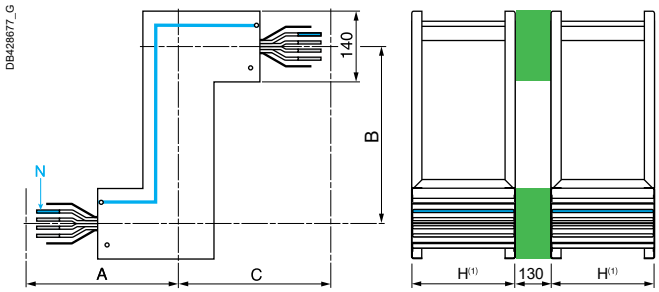

(1) See the "Trunking cross-section" page 68.

Dimensions

Rating (A)	Dimensions (mm)		
	A	B	C
6300	300	130 to 599	300

ZC - Edgewise zed units

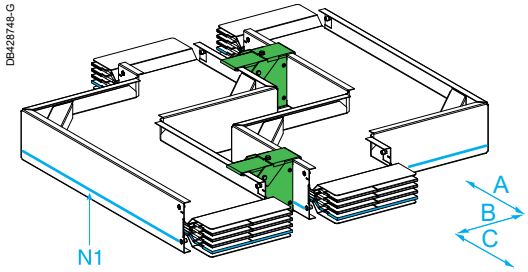

KTC6300ZC●1

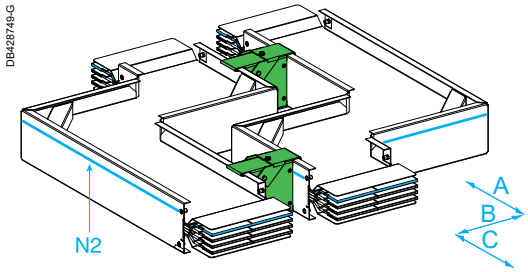

KTC6300ZC●2

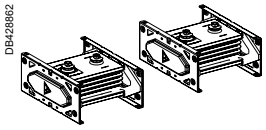

Type	Position of neutral	Cat. no. (2)		
		3L + PE	3L + N + PE	3L + N + PER (1)
Made to measure	N1	KTC6300ZC31	KTC6300ZC41	KTC6300ZC51
	N2	KTC6300ZC32	KTC6300ZC42	KTC6300ZC52

(1) To order the 3L + N + PER version with reinforced Isc, replace KTC6300ZC5● by KTC6300ZC7●.

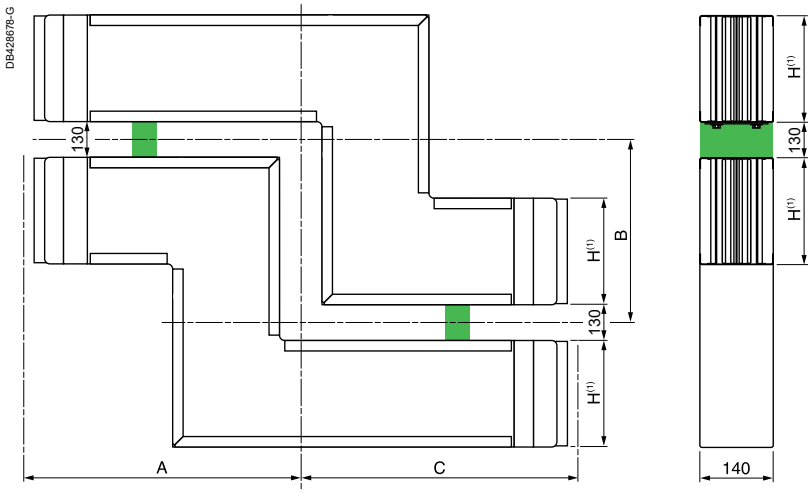

(1) See the "Trunking cross-section" page 68.

Dimensions

Rating (A)	Dimensions (mm)		
	A	B	C
6300	548	90 to 719	548

Zed components for changing direction
IP55

Canalis KTC 1000 to 5000

CP - Edgewise and flat zed units

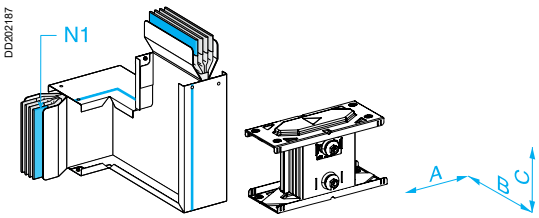

KTC●●●●CP●1

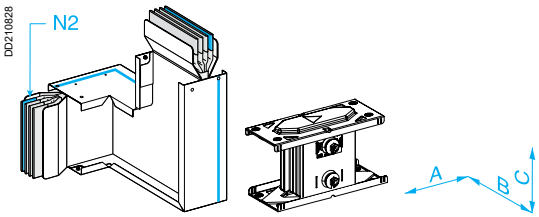

KTC●●●●CP●2

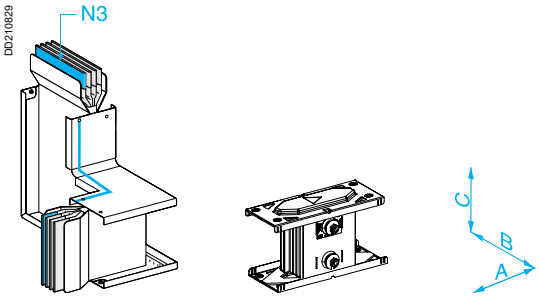

KTC●●●●CP●3

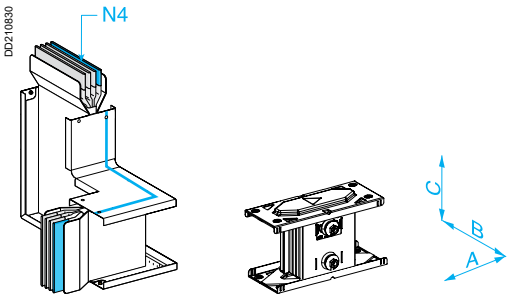

KTC●●●●CP●4

Type	Position of neutral	Cat. no. (2)		
		3L + PE	3L + N + PE	3L + N + PER (1)
Made to measure	N1	KTC●●●●CP31	KTC●●●●CP41	KTC●●●●CP51
	N2	KTC●●●●CP32	KTC●●●●CP42	KTC●●●●CP52
	N3	KTC●●●●CP33	KTC●●●●CP43	KTC●●●●CP53
	N4	KTC●●●●CP34	KTC●●●●CP44	KTC●●●●CP54

(1) To order the 3L + N + PER version with reinforced Isc, replace KTC●●●●CP5● by KTC●●●●CP7●.
(2) References KTC6300CP●● are made of 2 references KTC3200CP●●.
See details page 69.

KTC●●●●CP●1 and KTC●●●●CP●2

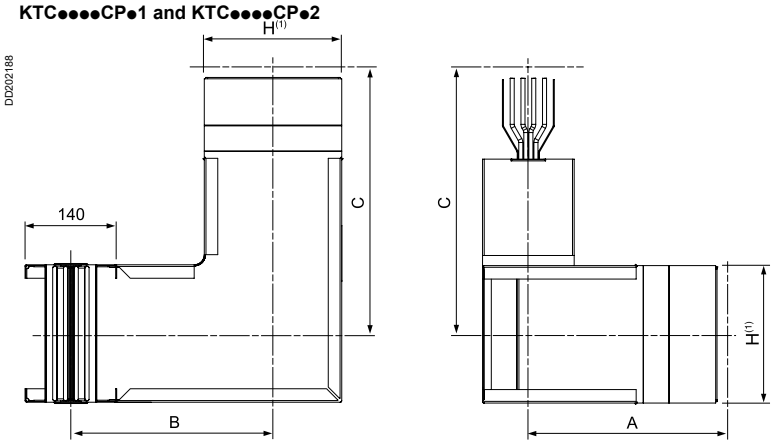

KTC●●●●CP●3 and KTC●●●●CP●4

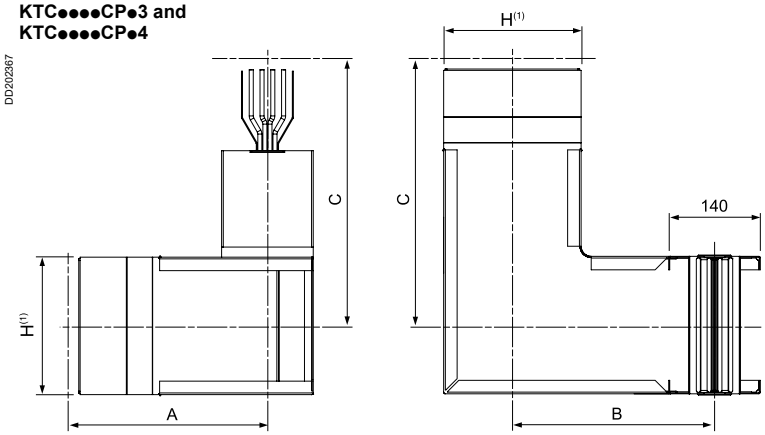

Dimensions

Rating (A)	Dimensions (mm)		
	A	B	C
1000	300	195 to 574	275
1350	300	210 to 589	290
1600	300	220 to 599	300
2000	300	240 to 619	320
2500	300	260 to 639	340
3200	300	280 to 659	360
4000	300	320 to 699	400
5000	300	360 to 739	440

(1) See the "Trunking cross-section" table below.

Trunking cross-section

Rating (A)		1000	1350	1600	2000	2500	3200	4000	5000	6300
Weight (kg/m)	3L + PE	19	25	29	36	44	51	66	82	102
	3L + N + PE	23	31	35	45	55	64	84	104	128
	3L + N + PER	25	33	39	49	60	71	92	114	142
Height H (mm) Width W (mm)		140 × 74	140 × 104	140 × 124	140 × 164	140 × 204	140 × 244	140 × 324	140 × 404	140 × 244 / 130 / 244

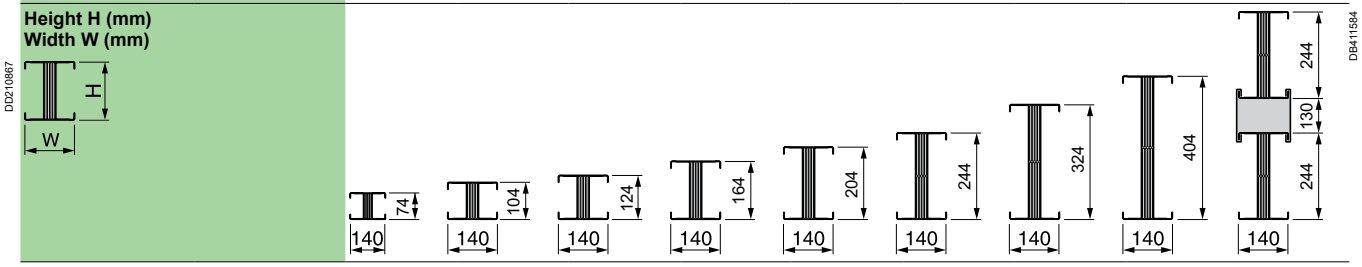

Canalis KTC 6300

CP - Edgewise and flat zed units

DB428742-G

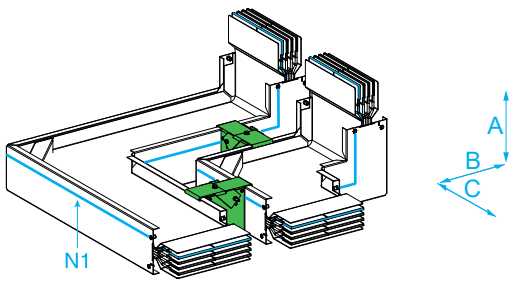

KTC6300CP●1

DB428743-G

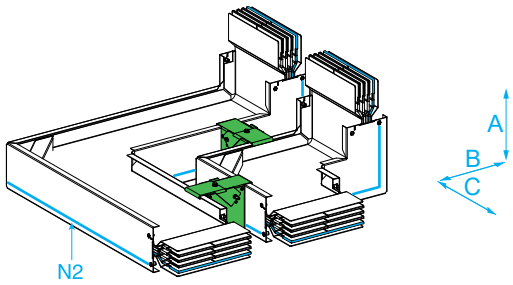

KTC6300CP●2

DB428862

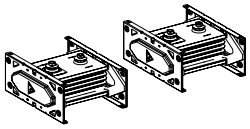

Type	Position of neutral	Cat. no. (2)		
		3L + PE	3L + N + PE	3L + N + PER (1)
Made to measure	N1	KTC6300CP31	KTC6300CP41	KTC6300CP51
	N2	KTC6300CP32	KTC6300CP42	KTC6300CP52
	N3	KTC6300CP33	KTC6300CP43	KTC6300CP53
	N4	KTC6300CP34	KTC6300CP44	KTC6300CP54

(1) To order the 3L + N + PER version with reinforced Isc, replace KTC6300CP5● by KTC6300CP7●.

DB428679-G

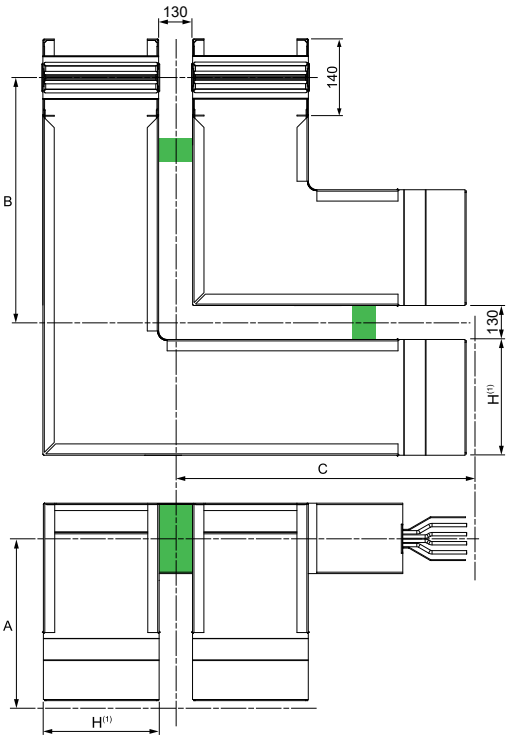

(1) See the "Trunking cross-section" page 68.

Dimensions

Rating (A)	Dimensions (mm)		
	A	B	C
6300	300	468 to 847	548

DB428744-G

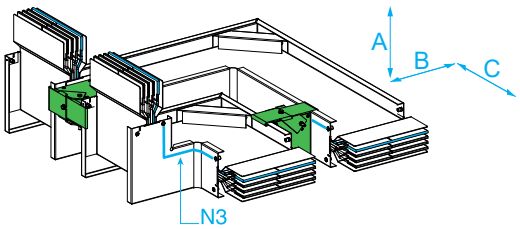

KTC6300CP●3

DB428745-G

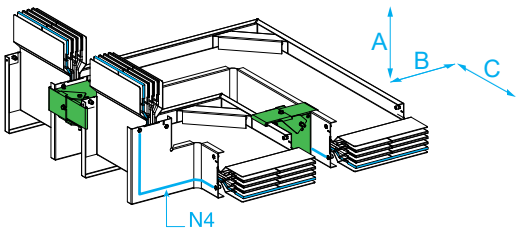

KTC6300CP●4

DB428862

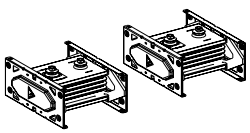

DB428680-G

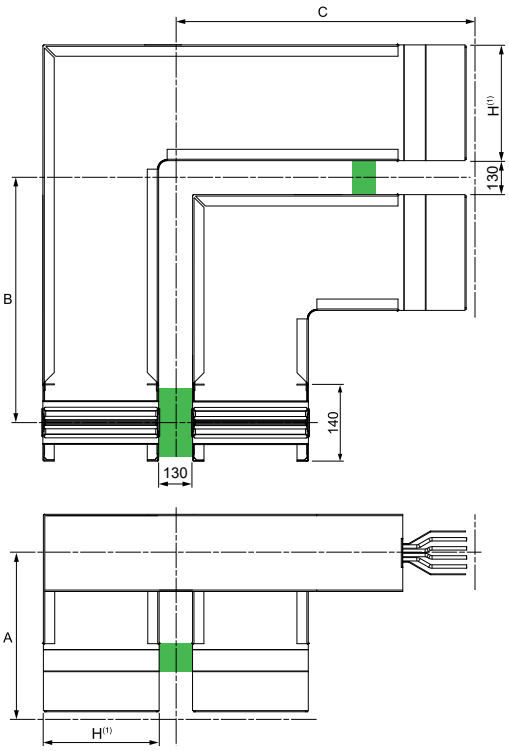

Fire rated straight feeder lengths

IP55

Compliant with the IEC 60331

Canalis KTC 1000 to 5000

Ordering

Complete the catalogue number by replacing "●●●●" by the rating.
Important:
■ add the dimensions of the selected component as a technical comment
Example: the catalogue number of an 1000 A feeder length, 3L + N + PE, 2450 mm long, is:
KTC1000FT42C, L = 2450
Rating

FT - Fire rated straight feeder lengths

DD210794

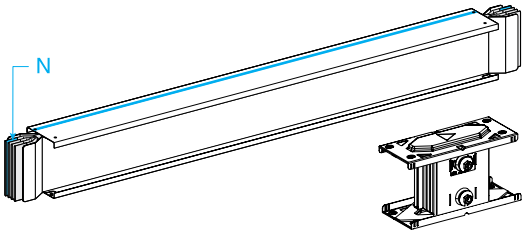

KTC●●●●FT●●●

Type	Length "L" (mm)	Cat. no.		
		3L + PE	3L + N + PE	3L + N + PER (1)
Fixed	2000	KTC●●●●FT320	KTC●●●●FT420	KTC●●●●FT520
	4000	KTC●●●●FT340	KTC●●●●FT440	KTC●●●●FT540
Made to measure	500 to 1500	KTC●●●●FT31A	KTC●●●●FT41A	KTC●●●●FT51A
	1501 to 1999	KTC●●●●FT32B	KTC●●●●FT42B	KTC●●●●FT52B
	2001 to 2500	KTC●●●●FT32C	KTC●●●●FT42C	KTC●●●●FT52C
	2501 to 3000	KTC●●●●FT33D	KTC●●●●FT43D	KTC●●●●FT53D
	3001 to 3500	KTC●●●●FT33E	KTC●●●●FT43E	KTC●●●●FT53E
	3501 to 3999	KTC●●●●FT33F	KTC●●●●FT43F	KTC●●●●FT53F

(1) To order the 3L + N + PER version with reinforced Isc, replace KTC●●●●FT5●● by KTC●●●●FT7●●.

KTC●●●●FT●●●

DD210795

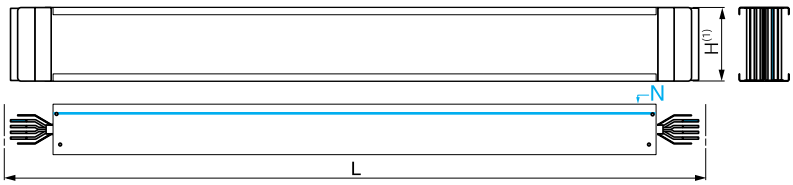

(1) See the "Trunking cross-section" table page 68.

Canalis KTC 6300

FT - Fire rated straight feeder lengths

DB428715-G

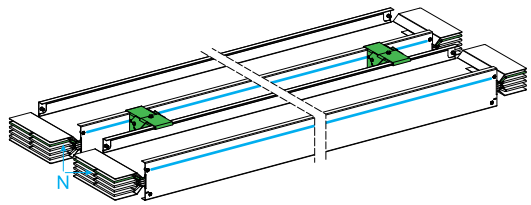

KTC6300FT●●●

DB428859

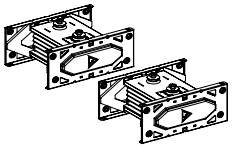

Type	Length "L" (mm)	Cat. no.		
		3L + PE	3L + N + PE	3L + N + PER (1)
Fixed	2000	KTC6300FT320	KTC6300FT420	KTC6300FT520
	4000	KTC6300FT340	KTC6300FT440	KTC6300FT540
Made to measure	500 to 1500	KTC6300FT31A	KTC6300FT41A	KTC6300FT51A
	1501 to 1999	KTC6300FT32B	KTC6300FT42B	KTC6300FT52B
	2001 to 2500	KTC6300FT32C	KTC6300FT42C	KTC6300FT52C
	2501 to 3000	KTC6300FT33D	KTC6300FT43D	KTC6300FT53D
	3001 to 3500	KTC6300FT33E	KTC6300FT43E	KTC6300FT53E
	3501 to 3999	KTC6300FT33F	KTC6300FT43F	KTC6300FT53F

(1) To order the 3L + N + PER version with reinforced Isc, replace KTC6300FT5●● by KTC6300FT7●●.

DB428667-G

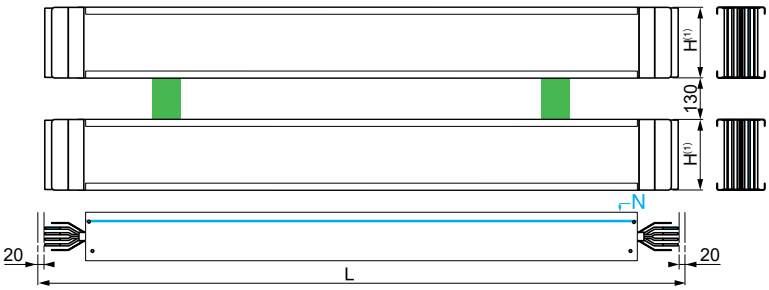

(1) See the "Trunking cross-section" table page 68.

Canalis KTC 1000 to 6300

FJ - Additional fire rated jointing units

DD210811-G

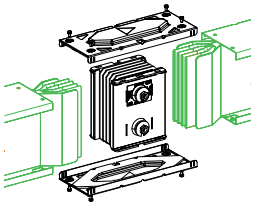

KTC●●●●FJ●

Type	Cat. no. (2)			
	3L + PE	3L + N + PE	3L + N + PER	
Version code (1)	3	4	5	7
Jointing unit	KTC●●●●FJ3	KTC●●●●FJ4	KTC●●●●FJ5	KTC●●●●FJ7

(1) See catalogue-number coding page 48.
(2) References KTC6300FJ● are made of 2 references KTC3200FJ●.

KTC●●●●FJ●

DD210812-G

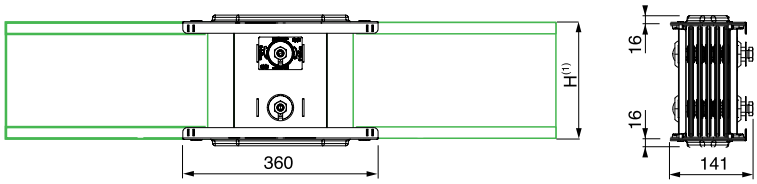

DD210868-G

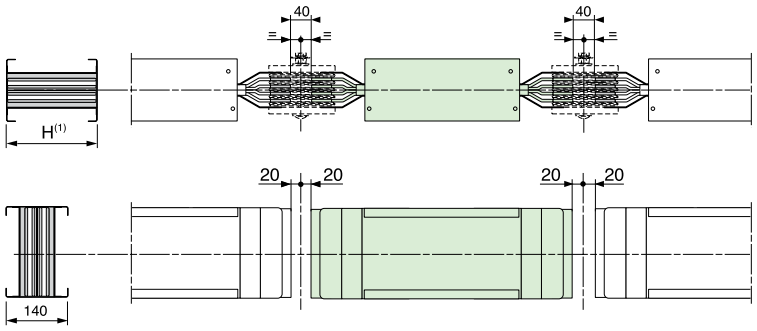

(1) See the "Trunking cross-section" table below.

Trunking cross-section

Rating (A)		1000	1350	1600	2000	2500	3200	4000	5000	6300
Weight (kg/m)	3L + PE	19	25	29	36	44	51	66	82	102
	3L + N + PE	23	31	35	45	55	64	84	104	128
	3L + N + PER	25	33	39	49	60	71	92	114	142
Height H (mm)		74	104	124	164	204	244	324	404	244 + 130 + 244
Width W (mm)		140	140	140	140	140	140	140	140	140

DD210867

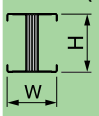

DB411584

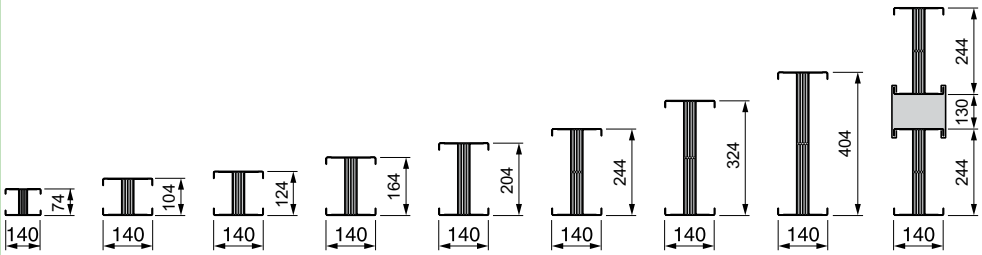

Fire rated flat elbows

IP55

Compliant with the IEC 60331

Canalis KTC 1000 to 5000

Ordering

Complete the catalogue number by replacing "●●●●" by the rating.
Important:
■ add the dimensions of the selected component as a technical comment.

Example: the catalogue number of a 2000 A flat elbow, N1, 3L + N + PE with dimensions A = 300 mm and B = 650 mm is:
KTC2000FP4B1, A = 300, B = 650.
Rating

FP - Fire rated flat elbows

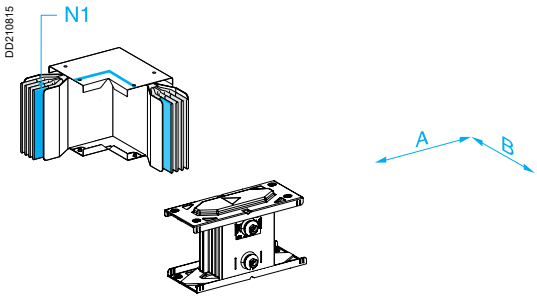

KTC●●●●FP●●1

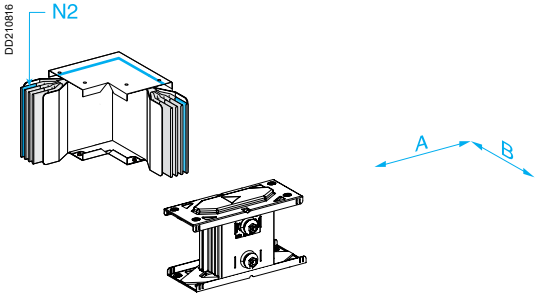

KTC●●●●FP●●2

Type	Position of neutral	Cat. no.		
		3L + PE	3L + N + PE	3L + N + PER (1)
2 fixed branches	N1	KTC●●●●FP3A1	KTC●●●●FP4A1	KTC●●●●FP5A1
	N2	KTC●●●●FP3A2	KTC●●●●FP4A2	KTC●●●●FP5A2
1 made to measure short branche	N1	KTC●●●●FP3B1	KTC●●●●FP4B1	KTC●●●●FP5B1
	N2	KTC●●●●FP3B2	KTC●●●●FP4B2	KTC●●●●FP5B2
1 made to measure long branche	N1	KTC●●●●FP3D1	KTC●●●●FP4D1	KTC●●●●FP5D1
	N2	KTC●●●●FP3D2	KTC●●●●FP4D2	KTC●●●●FP5D2
2 made to measure branches	N1	KTC●●●●FP3E1	KTC●●●●FP4E1	KTC●●●●FP5E1
	N2	KTC●●●●FP3E2	KTC●●●●FP4E2	KTC●●●●FP5E2

(1) To order the 3L + N + PER version with reinforced Isc, replace KTC●●●●FP5●● by KTC●●●●FP7●●.

KTC●●●●FP●●●

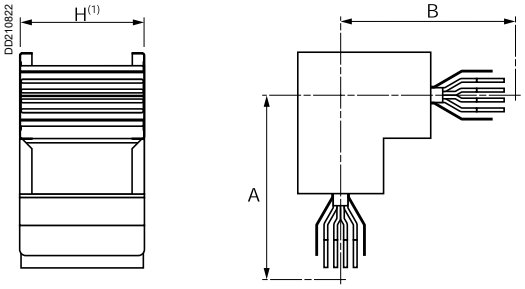

(1) See the "Trunking cross-section" table page 68 and dimensions page 64.

Canalis KTC 6300

FP - Fire rated flat elbows

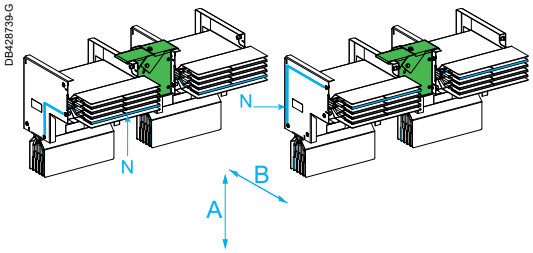

KTC6300FP●●1 **KTC6300FP●●2**

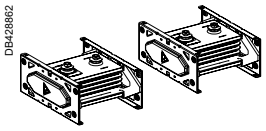

Type	Position of neutral	Cat. no.		
		3L + PE	3L + N + PE	3L + N + PER (1)
2 fixed branches	N1	KTC6300FP3A1	KTC6300FP4A1	KTC6300FP5A1
	N2	KTC6300FP3A2	KTC6300FP4A2	KTC6300FP5A2
1 made to measure short branche	N1	KTC6300FP3B1	KTC6300FP4B1	KTC6300FP5B1
	N2	KTC6300FP3B2	KTC6300FP4B2	KTC6300FP5B2
1 made to measure long branche	N1	KTC6300FP3D1	KTC6300FP4D1	KTC6300FP5D1
	N2	KTC6300FP3D2	KTC6300FP4D2	KTC6300FP5D2
2 made to measure branches	N1	KTC6300FP3E1	KTC6300FP4E1	KTC6300FP5E1
	N2	KTC6300FP3E2	KTC6300FP4E2	KTC6300FP5E2

(1) To order the 3L + N + PER version with reinforced Isc, replace KTC6300FP5●● by KTC6300FP7●●.

2 x KTC3200FP●●●

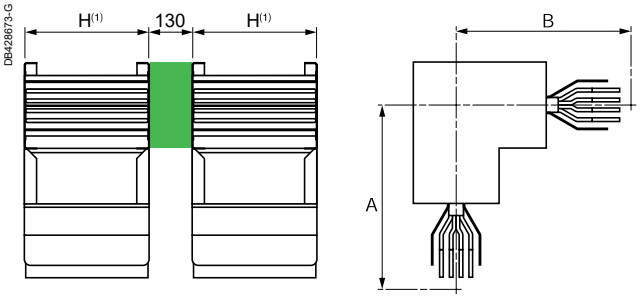

(1) See the "Trunking cross-section" table page 68 and dimensions page 64.

Canalis KTC 1000 to 5000

FC - Fire rated edgewise elbows

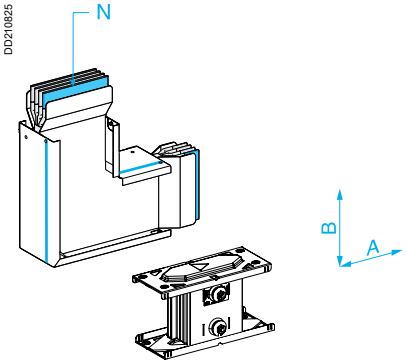

KTC●●●●FC●●

Type	Cat. no.		
	3L + PE	3L + N + PE	3L + N + PER (1)
2 fixed branches	KTC●●●●FC3A	KTC●●●●FC4A	KTC●●●●FC5A
1 made to measure short branche	KTC●●●●FC3B	KTC●●●●FC4B	KTC●●●●FC5B
1 made to measure long branche	KTC●●●●FC3D	KTC●●●●FC4D	KTC●●●●FC5D
2 made to measure branches	KTC●●●●FC3E	KTC●●●●FC4E	KTC●●●●FC5E

(1) To order the 3L + N + PER version with reinforced Isc, replace KTC●●●●FC5● by KTC●●●●FC7●.

KTC●●●●FC●●

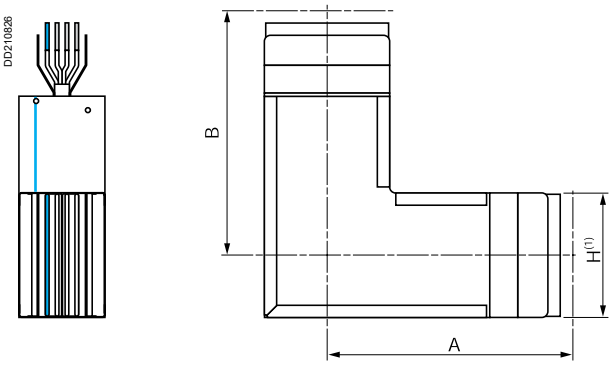

(1) See the "Trunking cross-section" table page 68 and dimensions page 64.

Canalis KTC 6300

FC - Fire rated edgewise elbows

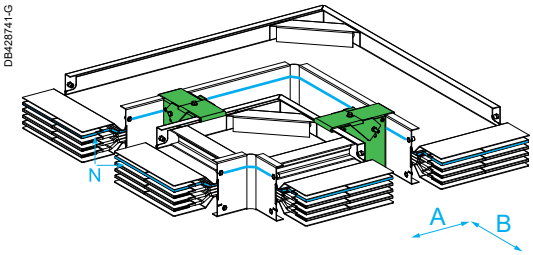

KTC6300FC●●●

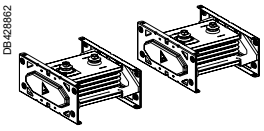

Type	Cat. no. (2)		
	3L + PE	3L + N + PE	3L + N + PER (1)
2 fixed branches	KTC6300FC3A	KTC6300FC4A	KTC6300FC5A
1 made to measure short branche	KTC6300FC3B	KTC6300FC4B	KTC6300FC5B

(1) To order the 3L + N + PER version with reinforced Isc, replace KTC6300FC5● by KTC6300FC7●.

2 x KTC3200FC●●●

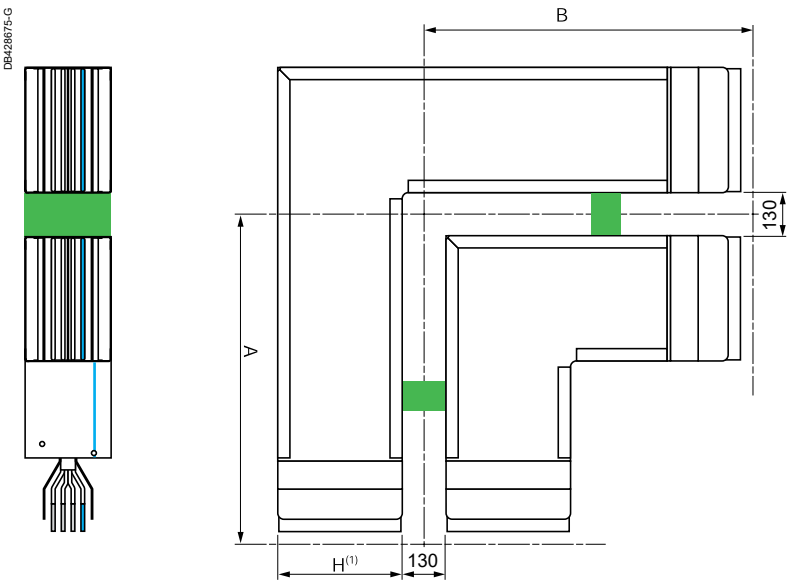

(1) See the "Trunking cross-section" table page 68 and dimensions page 64.

Canalis interfaces for Prisma**SeT** LV switchboard

Canalis KTC 1000 to 6300

Interfaces for Masterpact MTZ2/NW circuit breakers

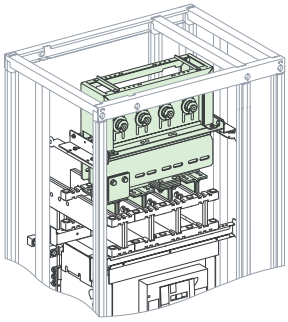

Top direct connection

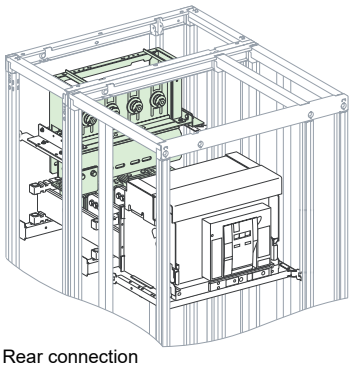

Rear connection

Interfaces can be ordered by 2 channels:
■ as a Canalis KT product, in this case use the reference in this catalogue eg. **KTB04715**
■ as a Prisma product, in this case replace the radical KTB by LVS to find the correct reference eg. **LVS04715**.
■ for MTZ3/NW63 in this case replace the radical KTB by LVMZ to find the correct reference e.g. **LVMZ1207.**

All accessories are only available as Prisma or Okken references.

All mounting instruction or other documents will be found by using the reference without **LVS** radical.

Circuit breaker	Type of circuit breaker	Canalis polarity	No. of poles of circuit breaker	Connection		Cat. no.
				Top direct	Rear	
MTZ2/ NW 08/16	Fixed or drawout	3L+PE	3P	■	■	**KTB04715**
		3L+N+PE	4P	■	■	**KTB04716**
		3L+N+PER	4P	■	■	**KTB04716+KTB0164PE1**
MTZ2/ NW 20/25	Fixed or drawout	3L+PE	3P	■	■	**KTB04725**
		3L+N+PE	4P	■	■	**KTB04726**
		3L+N+PER	4P	■	■	**KTB04726+KTB0244PE1**
MTZ2/ NW 32	Fixed or drawout	3L+PE	3P	■	■	**KTB04735**
		3L+N+PE	4P	■	■	**KTB04736**
		3L+N+PER	4P	■	■	**KTB04736+KTB0404PE1**
MTZ2/ NW 40	Fixed or drawout	3L+PE	3P		■	**KTB04737**
		3L+N+PE	4P		■	**KTB04738**
		3L+N+PER	4P		■	**KTB04738+KTB0404PE1**
MTZ3/ NW 40b-63	Drawout	3L+PE	3P	■		**KTB1207**
		3L+N+PE	4P	■		**KTB1208**
		3L+N+PER	4P	■		**KTB1208+KTB0622PE1**

For the position in the switchboard, see the "Installation guide".

Number of modules required in the switchboard

Circuit breaker	Connection	Type of circuit breaker	Number of vertical modules (1)
MTZ2/NW 08/16	Top direct	Fixed or drawout	27
	Rear	Fixed	16
		Drawout	17
MTZ2/NW 20/32	Top direct	Fixed or drawout	28
	Rear	Fixed	16
		Drawout	17
MTZ2/NW 40	Rear	Fixed or drawout	36
MTZ3/NW 40b-63	Top direct	Drawout	38

(1) 1 module = 50 mm.

Canalis interfaces for Prisma**SeT** LV switchboard

Canalis KTC 1000 to 6300

Interfaces for Masterpact MTZ1/NT and Compact NS circuit breakers

DD202306-G

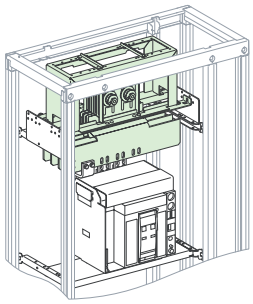

Top direct connection

DD202307-G

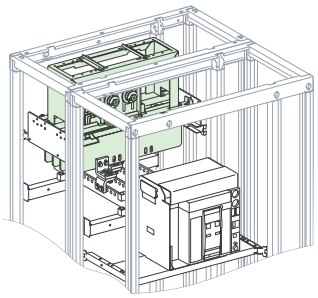

Rear connection

Masterpact MTZ1/NT

Circuit breaker	Type of circuit breaker	Canalis polarity	No. of poles of circuit breaker	Connection		Cat. no.
				Top direct	Rear	
MTZ1/NT 06/12	Fixed or drawout	3L+PE	3P	■	■	**KTB04703**
		3L+N+PE	4P	■	■	**KTB04704**
		3L+N+PER	4P	■	■	**KTB04704+KTB0164PE1**
MTZ1/NT 16	Fixed or drawout	3L+PE	3P		■	**KTB04703**
		3L+N+PE	4P		■	**KTB04704**
		3L+N+PER	4P		■	**KTB04704+KTB0164PE1**

For the position in the switchboard, see the "Installation guide".

Compact NS

Circuit breaker	Type of circuit breaker	Canalis polarity	No. of poles of circuit breaker	Connection		Cat. no.
				Top direct	Rear	
NS630b/ 1250	Fixed or drawout	3L+PE	3P	■	■	**KTB04703**
		3L+N+PE	4P	■	■	**KTB04704**
		3L+N+PER	4P	■	■	**KTB04704+KTB0164PE1**
NS1600	Fixed or drawout	3L+PE	3P		■	**KTB04703**
		3L+N+PE	4P		■	**KTB04704**
		3L+N+PER	4P		■	**KTB04704+KTB0164PE1**

For the position in the switchboard, see the "Installation guide".

Number of modules required in the switchboard

Circuit breaker	Connection	Type of circuit breaker	Number of vertical modules (1)
MTZ1/NT 06/12 NS630b/1250	Top direct	Fixed	17
		Drawout	18
	Rear	Fixed or drawout	16
MTZ1/NT 16 NS1600	Rear	Fixed or drawout	16

(1) 1 module = 50 mm.

Canalis interfaces for PrismaSeT LV switchboard

Canalis KTC 1000 to 6300

Interface supports and protection covers

DD202308-G

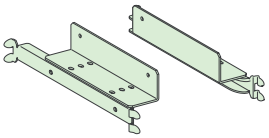

LVS03561

DD202309-G

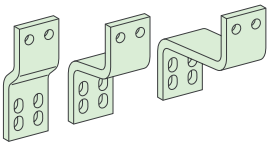

LVS04711
LVS04712
LVS04713
LVS04714

Masterpact MTZ2/NW

Circuit breaker	Type of circuit breaker	Connection	Supports	Terminal extension bar supports	Cover
MTZ2/NW 08/32	Fixed or drawout	Top direct	LVS03561	3 x LVS04694	LVS04871 + LVS04861
		Rear	LVS03561	2 x LVS04694	LVS04871 + LVS04863
MTZ2/NW 40	Fixed or drawout	Top direct	LVS03561	-	LVS04871 + LVS04861
		Rear	LVS03561	-	LVS04871 + LVS04863
MTZ3/NW 40b-63	Drawout	Top direct	LVS04739	-	-

Masterpact MTZ1/NT

Circuit breaker	Type of circuit breaker	Canalis polarity	Connection	Supports	Canalis/ circuit breaker connection	Cover
MTZ1/NT 06/12	Fixed or drawout	3P	Top direct	LVS03561	LVS04712	LVS04871 + LVS04852
			Rear	LVS03561	LVS04713	LVS04871 + LVS04853
		4P	Top direct	LVS03561	LVS04712	LVS04871 + LVS04852
			Rear	LVS03561	LVS04714	LVS04871 + LVS04853
MTZ1/NT 16	Fixed or drawout	3P	Rear	LVS03561	LVS04713	LVS04871 + LVS04854
		4P	Rear	LVS03561	LVS04714	LVS04871 + LVS04854

Compact NS

Circuit breaker	Type of circuit breaker	Canalis polarity	Connection	Supports	Canalis/ circuit breaker connection	Cover
NS630b/ 1250	Fixed	3P	Top direct	LVS03561	LVS04712	LVS04871 + LVS04851
			Rear	LVS03561	LVS04713	LVS04871 + LVS04853
		4P	Top direct	LVS03561	LVS04712	LVS04871 + LVS04851
			Rear	LVS03561	LVS04714	LVS04871 + LVS04853
	Drawout	3P	Top direct	LVS03561	LVS04711	LVS04871 + LVS04852
			Rear	LVS03561	LVS04713	LVS04871 + LVS04854
		4P	Top direct	LVS03561	LVS04712	LVS04871 + LVS04852
			Rear	LVS03561	LVS04714	LVS04871 + LVS04854
NS1600	Fixed	3P	Rear	LVS03561	LVS04713	LVS04871 + LVS04853
		4P	Rear	LVS03561	LVS04714	LVS04871 + LVS04853
	Drawout	3P	Rear	LVS03561	LVS04713	LVS04871 + LVS04854
		4P	Rear	LVS03561	LVS04714	LVS04871 + LVS04854

Arc-chute covers

Circuit breaker	Type of circuit breaker	Canalis polarity	Cat. no.
Masterpact MTZ1/NT	Fixed	3P	47335
		4P	47336
Compact NS	Fixed	3P	33596
		4P	33597

Canalis interfaces for Okken LV switchboard

Canalis KTC 1000 to 6300

Interfaces for Masterpact MTZ2/NW circuit breakers

DD202310-G

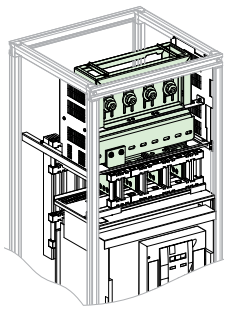

Top direct connection (RDH)

DD202311-G

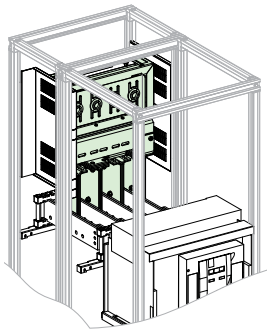

Rear connection (RAR)

Fitting the interface does not change switchboard modularity as fixed by the devices.

Circuit breaker	Type of circuit breaker	Canalis polarity	No. of poles of circuit breaker	Connection		Cat. no.
				Top direct	Rear	
MTZ2/NW 08/16	Drawout	3L+PE	3P	■		**KTB87811**
					■	**KTB87821**
		3L+N+PE	4P	■		**KTB87812**
					■	**KTB87822**
		3L+N+PER	4P	■		**KTB87812+KTB0164PE1**
					■	**KTB87822+KTB0164PE1**
MTZ2/NW 20/25	Drawout	3L+PE	3P	■		**KTB87813**
					■	**KTB87823**
		3L+N+PE	4P	■		**KTB87814**
					■	**KTB87824**
		3L+N+PER	4P	■		**KTB87814+KTB0244PE1**
					■	**KTB87824+KTB0244PE1**
MTZ2/NW 32	Drawout	3L+PE	3P	■		**KTB87815**
					■	**KTB87825**
		3L+N+PE	4P	■		**KTB87816**
					■	**KTB87826**
		3L+N+PER	4P	■		**KTB87816+KTB0404PE1**
					■	**KTB87826+KTB0404PE1**
MTZ2/NW 40	Drawout	3L+PE	3P	■		**KTB87817**
					■	**KTB87827**
		3L+N+PE	4P	■		**KTB87818**
					■	**KTB87828**
		3L+N+PER	4P	■		**KTB87818+KTB0404PE1**
					■	**KTB87828+KTB0404PE1**
MTZ3/NW 40b	Drawout	3L+PE	3P		■	**KTB1203**
		3L+N+PE	4P		■	**KTB1204**
		3L+N+PER	4P		■	**KTB01204 + KTB0404PE1**
MTZ3/NW 50	Drawout	3L+PE	3P		■	**KTB1207**
		3L+N+PE	4P		■	**KTB1208**
		3L+N+PER	4P		■	**KTB1208 + KTB0622PE1**

For the position in the switchboard, see the "Installation guide".

Interfaces for Masterpact MTZ1/NT circuit breakers

DD202312-G

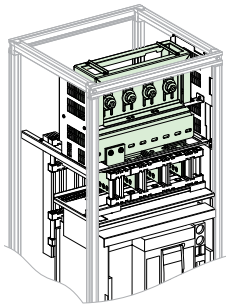

Top direct connection (RDH)

DD202313-G

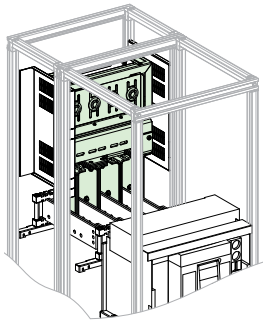

Rear connection (RAR)

Fitting the interface does not change switchboard modularity as fixed by the devices.

Circuit breaker	Type of circuit breaker	Canalis polarity	No. of poles of circuit breaker	Connection		Cat. no.
				Top direct	Rear	
MTZ1/NT 08/16	Drawout	3L+PE	3P	■		**KTB87811**
					■	**KTB87821**
		3L+N+PE	4P	■		**KTB87812**
					■	**KTB87822**
		3L+N+PER	4P	■		**KTB87812+KTB0164PE1**
					■	**KTB87822+KTB0164PE1**

For the position in the switchboard, see the "Installation guide".

Interface supports

Circuit breaker	Type of circuit breaker	Connection	Cat. no.
MTZ2/NW 08/40 **MTZ1/NT 08/16**	Drawout	Top direct	**87800**
MTZ2/NW 08/32[(1)] **MTZ1/NT 08/16**	Drawout	Rear	**87801**

(1) Rear connection of the interface to a Masterpact MTZ2/NW 40 circuit breaker, the supports are supplied with the interface.
Note: For MTZ3/NW40 breaker with Rear connections interface supports as follows,
1200 mm Depth - Supports are supplied along with the interface.
1400 mm Depth - LVMZ2860X0 reference to be ordered separately.

Designation	Cat. no.
Special tightening wrench bit	**87808**

■ For 2 superimposed 120x10 bars.
■ This tool is essential to tighten the conversion modules on the junction block's spreaders. It is fitted on a torque wrench.

Sealing kits
IP55

Canalis KTC 1000 to 6300

TT - Sealing kits for switchboard and Trihal transformer roofs with interface

DD202314-G

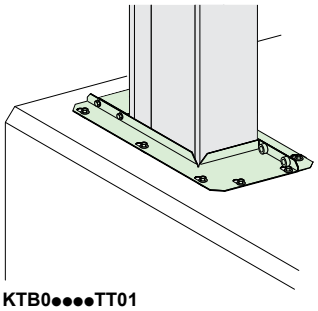

KTB0●●●●TT01

Type	Rating of the trunking (A)	Height H of the trunking (mm)	Cat. no.
Sealing kit	1000	74	KTB0074TT01
	1350	104	KTB0104TT01
	1600	124	KTB0124TT01
	2000	164	KTB0164TT01
	2500	204	KTB0204TT01
	3200	244	KTB0244TT01
	4000	324	KTB0324TT01
	5000	404	KTB0404TT01

PE - Reinforced protective earth (PER) for PrismaSeT and Okken interfaces

DD230215-G

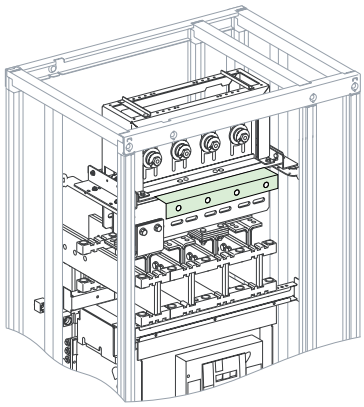

KTB0●●●PE1

Height "H" (mm)	Number of holes	Cat.no.
164	2	KTB0164PE1
244	3	KTB0244PE1
404	4	KTB0404PE1

KTB0●●●PE1

DD230216

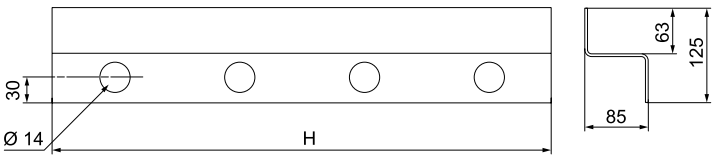

Thickness: 3 mm.

Canalis KTC 6300

TT - Sealing kits for switchboard and Trihal transformer roofs with interface

DB410936-G

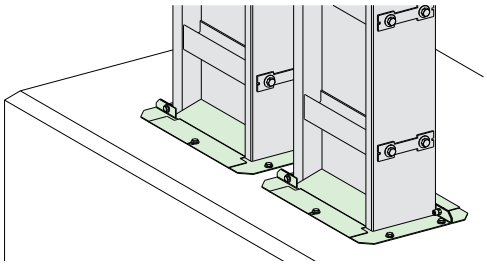

KTB0622TT01

Type	Rating of the trunking (A)	Height H of the trunking (mm)	Cat. no.
Sealing kit	6300	622	KTB0622TT01

PE - Reinforced protective earth (PER) for PrismaSeT and Okken interfaces

DB410937-G

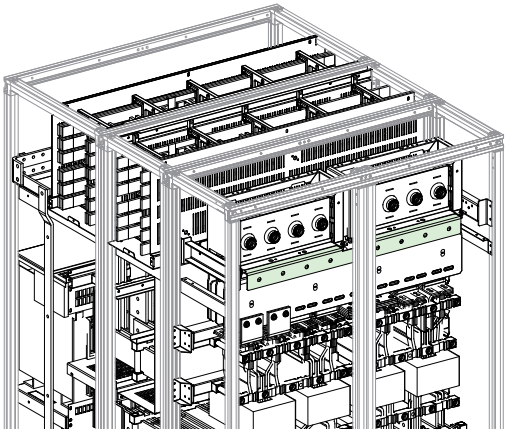

KTB0622PE1

Height "H" (mm)	Number of holes	Cat.no.
622	8	KTB0622PE1

KTB0622PE1

DB410938

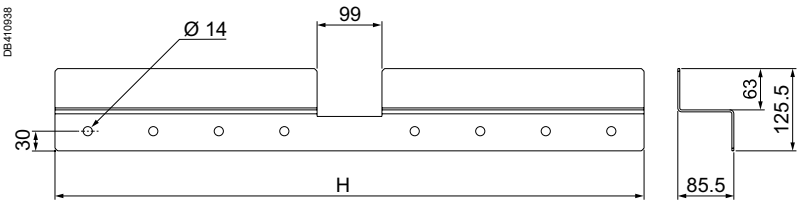

Thickness: 3 mm.

Feed units for switchboards and oil immersed transformers

IP55

Canalis KTC 1000 to 5000

Ordering

Complete the catalogue number by replacing "●●●●" by the rating.
Important:
■ add the dimensions of the selected unit as a technical comment.

Example: the catalogue number of a 1250 A made to measure end feed unit, N2, 3L + N + PE, 235 mm long and with between centres J, K and M = 170 mm, is:
KTC1350ER42, A = 235, J = 170, K = 170 and M = 170.
Rating

ER●1, ER●2 - Straight feed units

DD210831

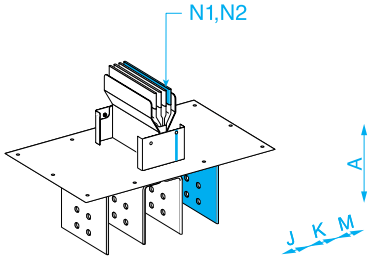

KTC●●●●ER●1
KTC●●●●ER●2

Type	Position of neutral	Cat. no.		
		3L + PE	3L + N + PE	3L + N + PER (1)
Fixed	N1	KTC●●●●ER31	KTC●●●●ER41	KTC●●●●ER51
Made to measure	N2	KTC●●●●ER32	KTC●●●●ER42	KTC●●●●ER52

(1) To order the 3L + N + PER version with reinforced Icc, replace KTC●●●●ER5● by KTC●●●●ER7●.

These end feed units are supplied with a connection kit to create a PEN if needed.

KTC●●●●ER●1, KTC●●●●ER●2
3L + N + PE or PER

DD210832

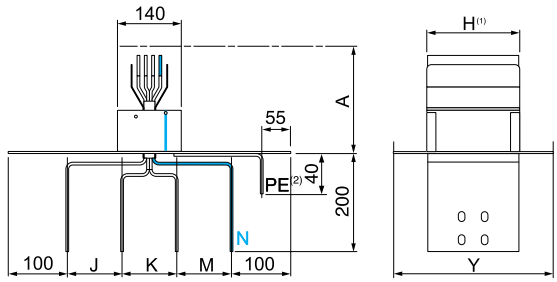

3L + PE

DB429068

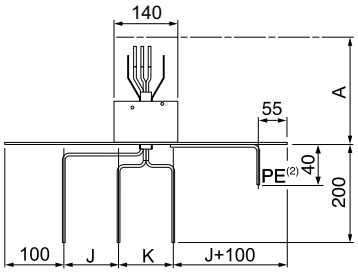

(1) See the "Trunking cross-section" table in the following page.
(2) PE drilled diameter = 14 mm pour cables with crimped lugs.

Table of dimensions

Rating (A)	Neutral	Dimensions (mm)		
		A	J, K, M	Y
1000 to	N1	235	115	230
1600	N2	235 to 734	80 to 250	230
2000 to	N1	235	115	350
3200	N2	235 to 734	80 to 250	350
4000	N1	235	115	510
and 5000	N2	235 to 734	80 to 250	510

Dimensions of connection pads

Rating (A)	1000	1350	1600	2000	2500	3200	4000	5000	6300
Drilling for connection (mm) Thickness of conductor = 6 mm.									

DB411585

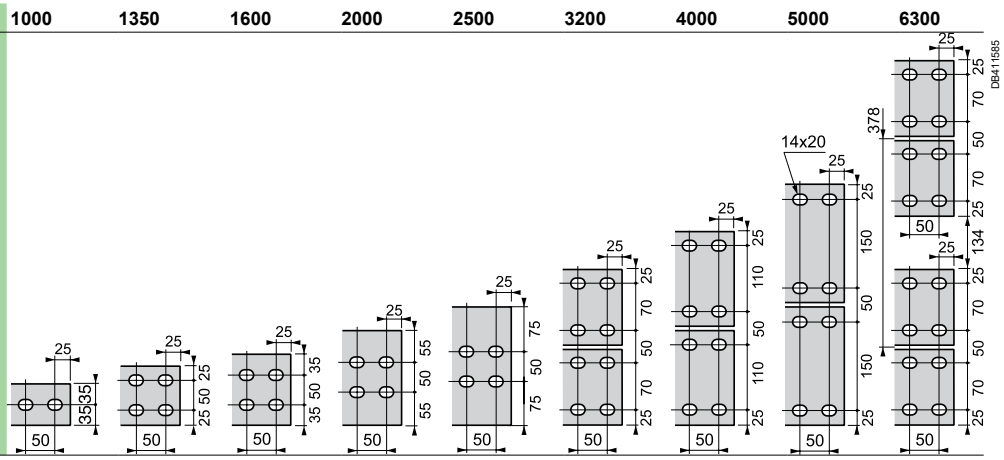

Feed units for switchboards and oil immersed transformers

IP55

Canalis KTC 1000 to 5000

ER•3, ER•4 - Flat elbow feed units

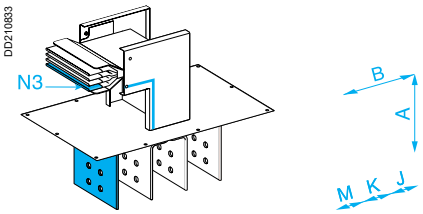

KTC••••ER•3

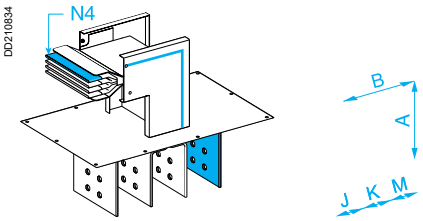

KTC••••ER•4

Type	Position of neutral	Cat. no.		
		3L + PE	3L + N + PE	3L + N + PER (1)
Made to measure	N3	KTC••••ER33	KTC••••ER43	KTC••••ER53
	N4	KTC••••ER34	KTC••••ER44	KTC••••ER54

(1) To order the 3L + N + PER version with reinforced Icc, replace KTC••••ER5• by KTC••••ER7•.

KTC••••ER•3 (3), 3L + N + PE or PER KTC••••ER•4 (3), 3L + N + PE or PER

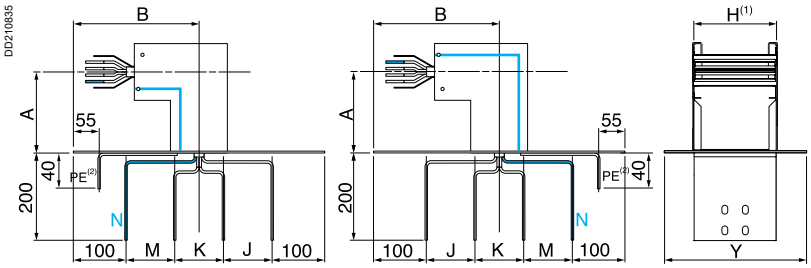

(1) See the "Trunking cross-section" table below.
(2) PE drilled diameter = 14 mm pour cables with crimped lugs.
(3) 3L + PE version, see page 79.

These end feed units are supplied with a connection kit to create a PEN if needed.

Tableau of dimensions

Rating (A)	Neutral	Dimensions (mm)			
		A	B	J, K, M	Y
1000 to 1600	N3, N4	200 to 534	300	80 to 250	230
2000 to 3200	N3, N4	200 to 534	300	80 to 250	350
4000 and 5000	N3, N4	200 to 534	300	80 to 250	510

Cut-out drawing for feed units placed directly on the device roof

Table of dimensions

Rating (A)	Dimensions (mm)		
	Y	U	V
1000 to 1600	230	K/2 + J + 80	K/2 + M + 80
2000 to 3200	350	K/2 + J + 80	K/2 + M + 80
4000 and 5000	510	K/2 + J + 80	K/2 + M + 80
6300	350	K/2 + J + 80	K/2 + M + 80

For the 3L + PE version, consider M = J to calculate the Y quotation.

1000 to 5000 A

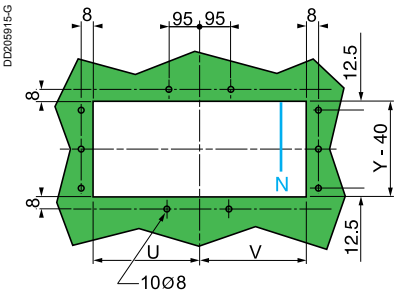

6300 A

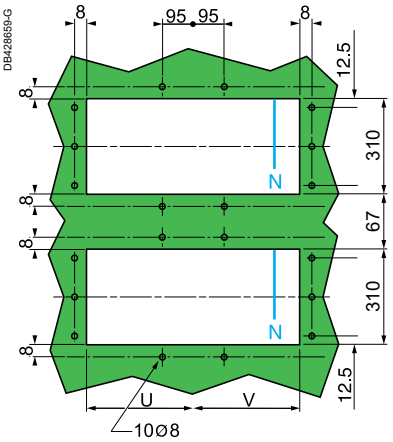

Trunking cross-section

Rating (A)		1000	1350	1600	2000	2500	3200	4000	5000	6300
Weight (kg/m)	3L + PE	19	25	29	36	44	51	66	82	102
	3L + N + PE	23	31	35	45	55	64	84	104	128
	3L + N + PER	25	33	39	49	60	71	92	114	142

Height H (mm)
Width W (mm)

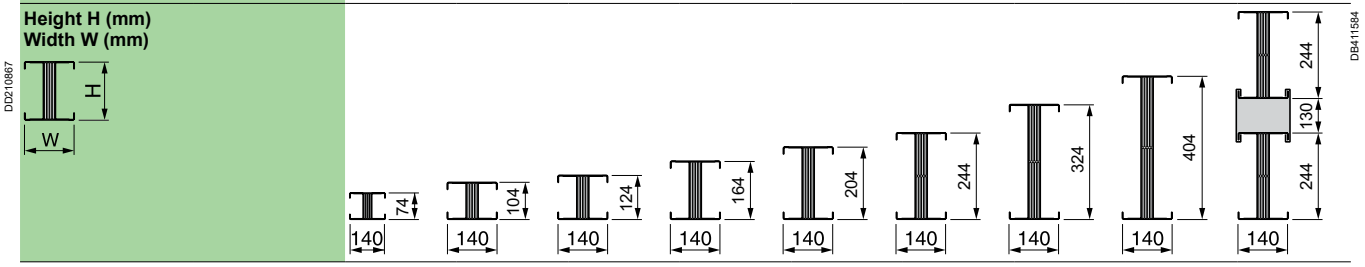

Canalis KTC 1000 to 5000

ER●5, ER●6 - Edgewise elbow feed units

DD210837

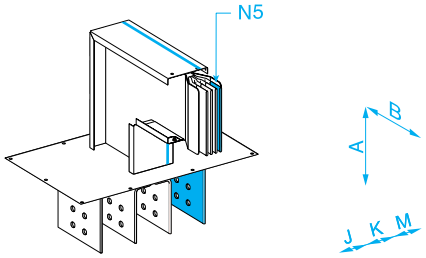

KTC●●●●ER●5

DD210838

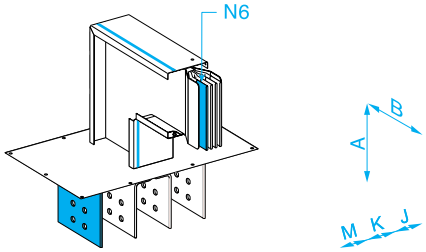

KTC●●●●ER●6

Type	Position of neutral	Cat. no.		
		3L + PE	3L + N + PE	3L + N + PER (1)
Made to measure	N5	KTC●●●●ER35	KTC●●●●ER45	KTC●●●●ER55
	N6	KTC●●●●ER36	KTC●●●●ER46	KTC●●●●ER56

(1) To order the 3L + N + PER version with reinforced Icc, replace KTC●●●●ER5● by KTC●●●●ER7●.

KTC●●●●ER●5 (3), 3L + N + PE or PER **KTC●●●●ER●6 (3), 3L + N + PE or PER**

DD210839

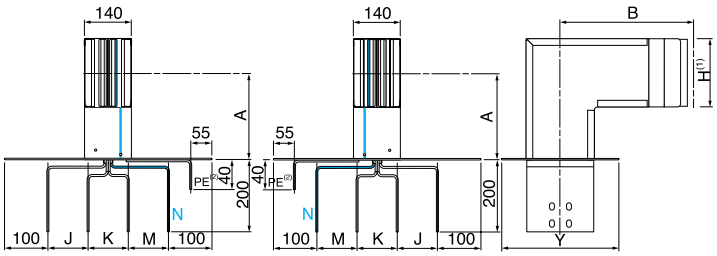

(1) See the "Trunking cross-section" table opposite.
(2) PE drilled diameter = 14 mm pour cables with crimped lugs.
(3) 3L + PE version, see page 79.

Table of dimensions

Rating (A)	Neutral	Dimensions (mm)			
		A	B	J, K, M	Y
1000	N5, N6	175 to 509	275	80 to 250	230
1350	N5, N6	190 to 524	290	80 to 250	230
1600	N5, N6	200 to 534	300	80 to 250	230
2000	N5, N6	220 to 554	320	80 to 250	350
2500	N5, N6	240 to 574	340	80 to 250	350
3200	N5, N6	260 to 594	360	80 to 250	350
4000	N5, N6	300 to 634	400	80 to 250	510
5000	N5, N6	340 to 674	440	80 to 250	510

Cut-out drawing for feed units placed directly on the device

Table of dimensions

Rating (A)	Dimensions (mm)		
	Y	U	V
1000 to 1600	230	K/2 + J + 80	K/2 + M + 80
2000 to 3200	350	K/2 + J + 80	K/2 + M + 80
4000 and 5000	510	K/2 + J + 80	K/2 + M + 80
6300	350	K/2 + J + 80	K/2 + M + 80

For the 3L + PE version, consider M = J to calculate the Y quotation.

1000 to 5000 A

DD205915-G

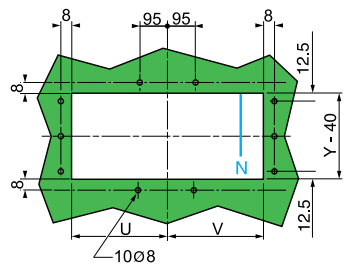

6300 A

DB428659-G

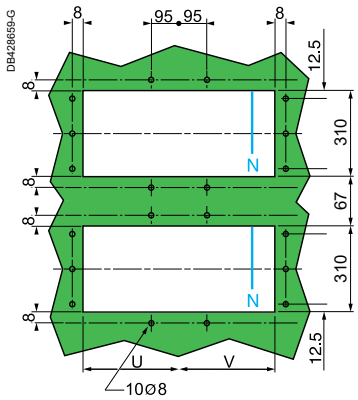

Dimensions of connection pads

Rating (A)	1000	1350	1600	2000	2500	3200	4000	5000	6300
Drilling for connection (mm) Thickness of conductor = 6 mm.									

DB411585

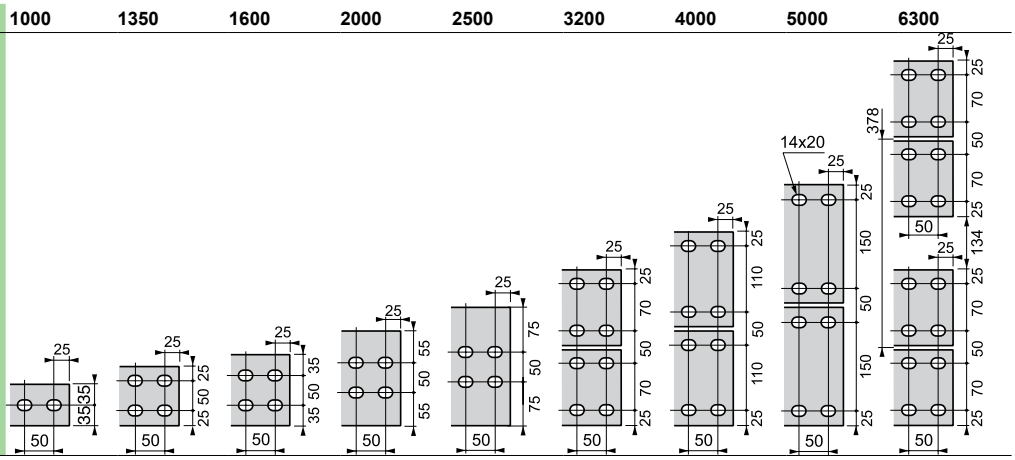

Feed units for switchboards and oil immersed transformers

IP55

Canalis KTC 6300

ER●1, ER●2 - Straight feed units

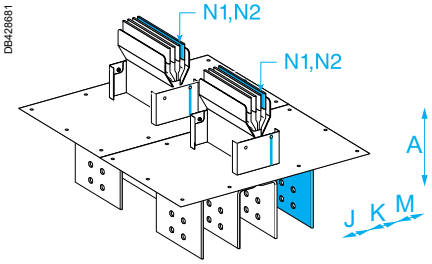

KTC6300ER●1
KTC6300ER●2

Type	Position of neutral	Cat. no.		
		3L + PE	3L + N + PE	3L + N + PER (1)
Fixed	N1	**KTC6300ER31**	**KTC6300ER41**	**KTC6300ER51**
Made to measure	N2	**KTC6300ER32**	**KTC6300ER42**	**KTC6300ER52**

(1) To order the 3L + N + PER version with reinforced Icc, replace KTC6300ER5● by KTC6300ER7●.

KTC6300ER●1, KTC6300ER●2
3L + N + PE or PER

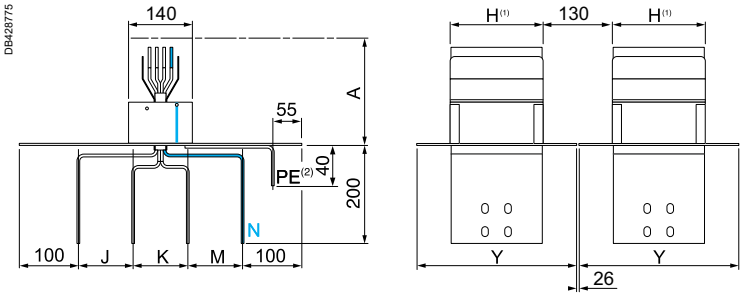

3L + PE

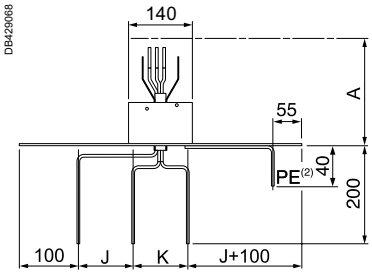

(1) See the "Trunking cross-section" table page 85.
(2) PE drilled diameter = 14 mm pour cables with crimped lugs.

Table of dimensions

Rating (A)	Neutral	Dimensions (mm)		
		A	J, K, M	Y
6300	N1	235	115	350
	N2	235 to 734	80 to 250	350

Canalis KTC 6300

ER●3, ER●4 - Flat elbow feed units

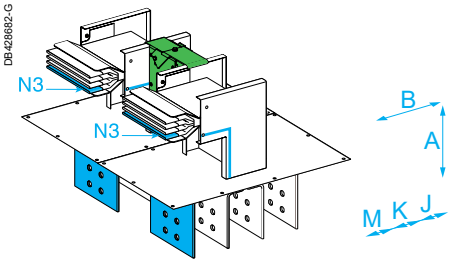

KTC6300ER●3

Type	Position of neutral	Cat. no.		
		3L + PE	3L + N + PE	3L + N + PER (1)
Made to measure	N3	KTC6300ER33	KTC6300ER43	KTC6300ER53
	N4	KTC6300ER34	KTC6300ER44	KTC6300ER54

(1) To order the 3L + N + PER version with reinforced Icc, replace KTC6300ER5● by KTC6300ER7●.

KTC6300ER●3 (3), 3L + N + PE or PER

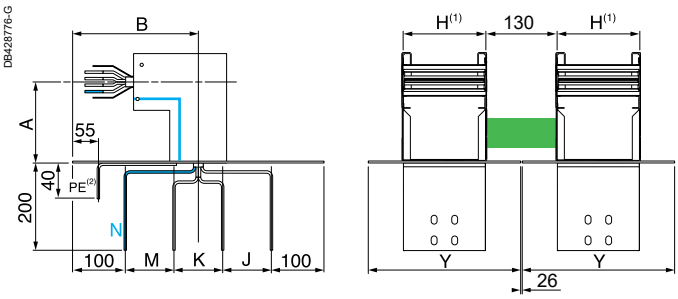

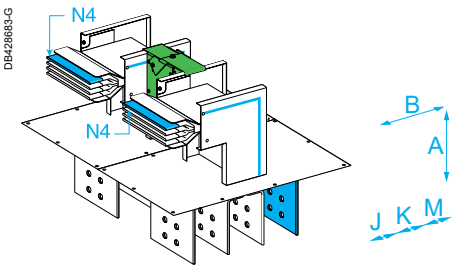

KTC6300ER●4

KTC6300ER●4 (3), 3L + N + PE or PER

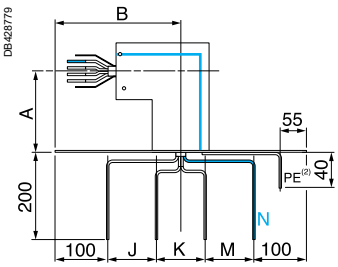

(1) See the "Trunking cross-section" table page 85.
(2) PE drilled diameter = 14 mm pour cables with crimped lugs.
(3) 3L + PE version, see page 79.

Tableau of dimensions

Rating (A)	Neutral	Dimensions (mm)			
		A	B	J, K, M	Y
6300	N3, N4	200 to 534	300	80 to 250	350

Feed units for switchboards and oil immersed transformers

IP55

Canalis KTC 6300

ER●5, ER●6 - Edgewise elbow feed units

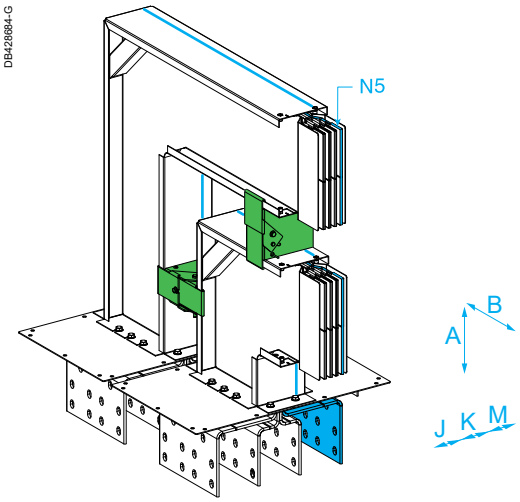

KTC6300ER●5

Type	Position of neutral	Cat. no.		
		3L + PE	3L + N + PE	3L + N + PER (1)
Made to measure	N5	KTC6300ER35	KTC6300ER45	KTC6300ER55
	N6	KTC6300ER36	KTC6300ER46	KTC6300ER56

(1) To order the 3L + N + PER version with reinforced Icc, replace KTC6300ER5● by KTC6300ER7●.

KTC6300ER●5 (3), 3L + N + PE or PER

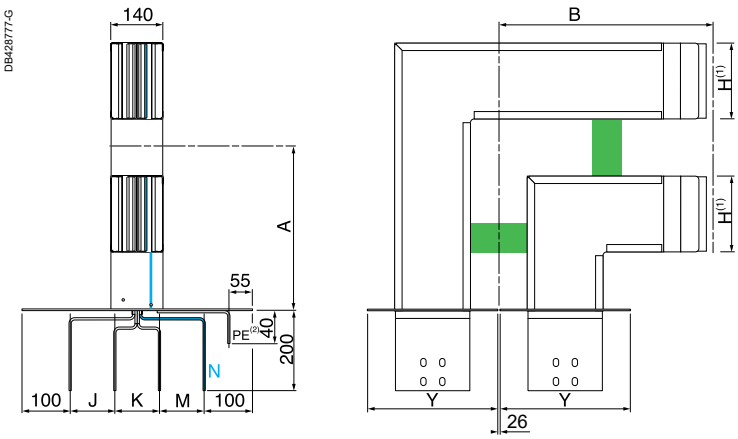

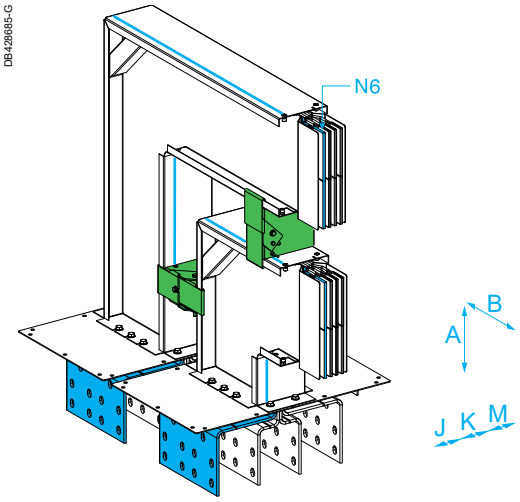

KTC6300ER●6

KTC6300ER●6 (3), 3L + N + PE or PER

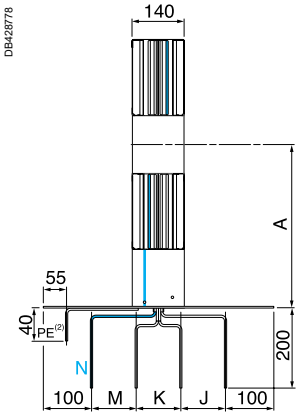

(1) See the "Trunking cross-section" table page 85.
(2) PE drilled diameter = 14 mm pour cables with crimped lugs.
(3) 3L + PE version, see page 79.

Table of dimensions

Rating (A)	Neutral	Dimensions (mm)			
		A	B	J, K, M	Y
6300	N3, N4	448 to 782	548	80 to 250	350

Canalis KTC 1000 to 5000

ER●7 - Bar feed units, flat outlets

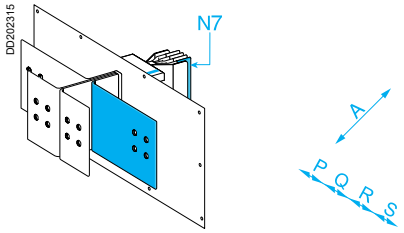

KTC●●●●ER●7

Type	Cat. no.(2)		
	3L + PE	3L + N + PE	3L + N + PER (1)
Made to measure	KTC●●●●ER37	KTC●●●●ER47	KTC●●●●ER57

(1) To order the 3L + N + PER version with reinforced Icc, replace KTC●●●●ER57 by KTC●●●●ER77.
(2) Not available for KTC6300.
Connection pad dimensions are identical to those of the feed units.

KTC●●●●ER●7
3L + N + PE or PER

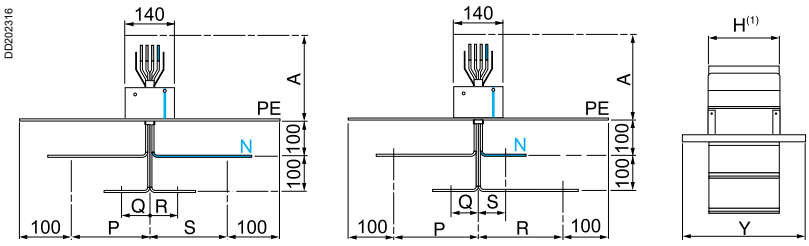

3L + PE

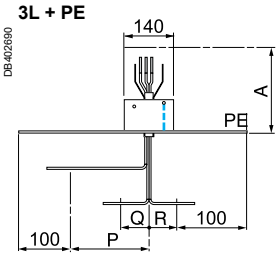

(1) See the "Trunking cross-section" table below.

Table of dimensions

Rating (A)	Dimensions (mm)				
	A	P - Q	S - R or R - S	Q, R, S minimum	Y
1000 to 1600	235 to 734	160 to 600	160 to 600	80	230
2000 to 3200	235 to 734	160 to 600	160 to 600	80	350
4000 and 5000	235 to 734	160 to 600	160 to 600	80	510

Cut-out drawing for straight feed units connected directly to the device

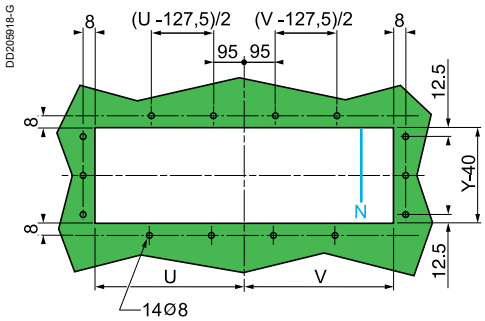

For the 3L + PE version, consider S = 0 to calculate the V quotation.

Table of dimensions

Rating (A)	Dimensions (mm)		
	Y	U	V
1000 to 1600	230	U = P + 80	if S > R, V = S + 80 if R > S, V = R + 80
2000 to 3200	350		
4000 and 5000	510		

Trunking cross-section

Rating (A)		1000	1350	1600	2000	2500	3200	4000	5000	6300
Weight (kg/m)	3L + PE	19	25	29	36	44	51	66	82	102
	3L + N + PE	23	31	35	45	55	64	84	104	128
	3L + N + PER	25	33	39	49	60	71	92	114	142
Height H (mm) Width W (mm)		74 140	104 140	124 140	164 140	204 140	244 140	324 140	404 140	244 130 244 140

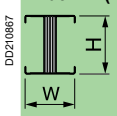

Canalis KTC 1000 to 6300

Ordering

To order a protective cover onto which a feed connector is fitted, the parameters D, G and Z, which depend on the feed connector, must be given.

Example: the catalogue number of a rigid vertical protective cover with dimension Y = 350 mm intended for a feed unit with different between centre dimensions D, G and Z (in mm) is:
KTB0350CR2, D = 330, G = 450 and Z = 500.

CR1 - Rigid horizontal protective covers for feed units ER N1 to N7

DB428711-G

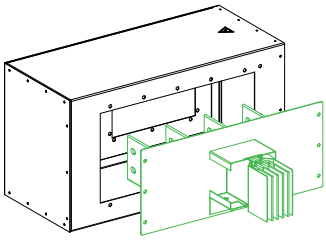

KTB●●●●CR1

DB428638-G

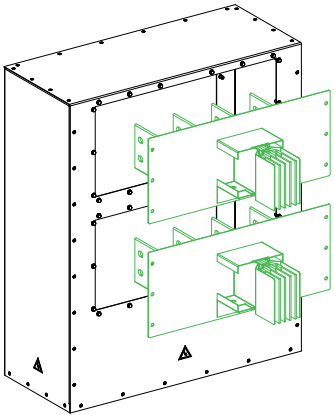

KTB0726CR1

Important: when ordering a horizontal cover, make sure you indicate dimensions "D, G and Z" with the catalogue number.

Rating (A)	Dimensions "Y" (mm)	Cat. no.	Weight (kg)
1000 to 1600	230	**KTB0230CR1**	12.00
2000 to 3200	350	**KTB0350CR1**	12.00
4000 and 5000	510	**KTB0510CR1**	12.00
6300	350	**KTB0726CR1**	60.00

KTB●●●●CR1

DB428712-G

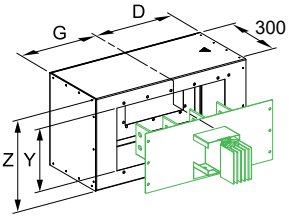

KTB0726CR1

DB428642-G

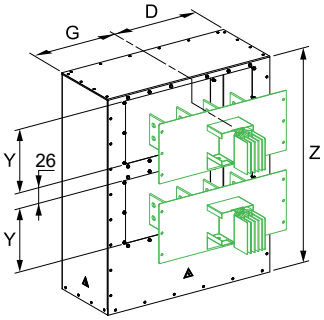

Protective cover for ER N1 to N6 straight end feed connectors
Dimensions **D** and **G** are determined by the between centres dimensions (J, K and M) of the end feed connector bars to be protected.
The position of the neutral on the feed connector also determines the rule to be used for calculating parameters **D** and **G**.

If the feed connector comes into the cover with the neutral on the right:
D = **K**/2 + **M** + 100(1)
G = **K**/2 + **J** + 100(1)

If the feed connector comes into the cover with the neutral on the left:
D = **K**/2 + **J** + 100(1)
G = **K**/2 + **M** + 100(1)
(1) = For calculating 5000A = D & G values.
D = **K**/2 + **J** + 172.5
G = **K**/2 + **M** + 172.5

For the 3L + PE version, consider M = J to calculate the D and G quotations.

Table of dimensions

Rating (A)	Dimensions (mm)			
	Y	D	G	Z
1000 to 1600	230	220 to 475	220 to 475	310 to 800
2000 to 3200	350	220 to 475	220 to 475	430 to 800
4000 and 5000	510	220 to 475	220 to 475	590 to 800
6300	350	292.5 to 547.5	292.5 to 547.5	790 to 1200

Protective cover for ER N7 straight end feed connectors
Dimensions **D** and **G** are determined by the between centres dimensions (P, Q, R and S) of the end feed connector bars to be protected.
Position of the neutral on the feed connector also determines the rule to be used for calculating parameters **D** and **G**.

If the feed connector comes into the cover with the neutral on the right:
D = **max(R ; S)** + 100
G = **max(P ; Q)** + 100

If the feed connector comes into the cover with the neutral on the left:
D = **max(P ; Q)** + 100
G = **max(R ; S)**+ 100

For the 3L + PE version, consider S = 0 to calculate the D and G quotations.

Table of dimensions

Rating (A)	Dimensions (mm)			
	Y	D	G	Z
1000 to 1600	230	340 to 1000	340 to 1000	310 to 800
2000 to 3200	350	340 to 1000	340 to 1000	430 to 800
4000 and 5000	510	340 to 1000	340 to 1000	590 to 800

Canalis KTC 1000 to 6300

CR2, CR3 - Rigid vertical protective covers for feed units ER N1 to N7

DD202321-G

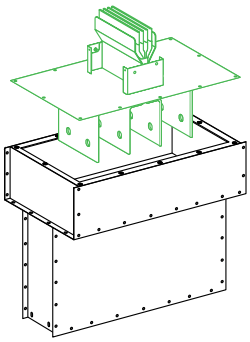

KTB●●●●CR2

Important: when ordering a vertical cover, make sure you indicate dimensions "D, G and Z" with the catalogue number.

400 to 800 mm high covers

Rating (A)	Dimensions "Y" (mm)	Cat. no.	Weight (kg)
1000 to 1600	230	**KTB0230CR2**	40.00
2000 to 3200	350	**KTB0350CR2**	40.00
4000 and 5000	510	**KTB0510CR2**	40.00

KTB●●●●CR2

DD202322-G

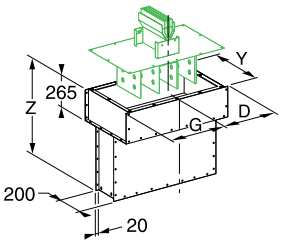

Dimensions **D** and **G** are determined by the between centres dimensions (J, K and M) of the end feed connector bars to be protected.
D = **K**/2 + **J** + 100
G = **K**/2 + **M** + 100
For the 3L + PE version, consider M = J to calculate the D and G quotations.

Table of dimensions for ER N1 to N6 straight feed units

Rating (A)	Dimensions (mm)			
	Y	D	G	Z
1000 to 1600	230	220 to 475	220 to 475	400 to 800
2000 to 3200	350	220 to 475	220 to 475	400 to 800
4000 and 5000	510	220 to 475	220 to 475	400 to 800

100 to 400 mm high covers

Rating (A)	Dimensions "Y" (mm)	Cat. no.	Weight (kg)
1000 to 1600	230	**KTB0230CR3**	17.00
2000 to 3200	350	**KTB0350CR3**	17.00
4000 and 5000	510	**KTB0510CR3**	17.00
6300	350	**KTB0726CR3**	60.00

DD202323-G

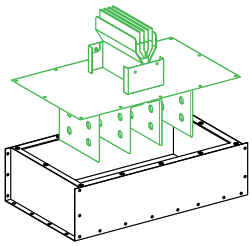

KTB●●●●CR3

KTB●●●●CR3

DD202324-G

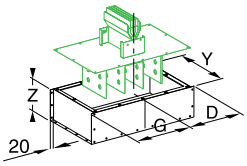

KTB0726CR3

DB428643

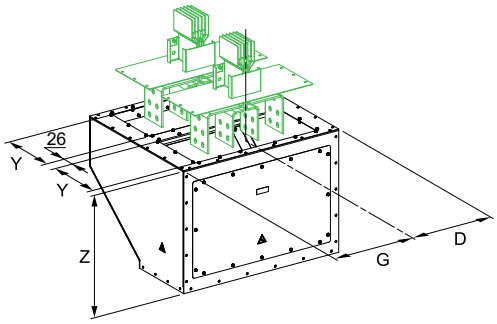

Dimensions **D** and **G** are determined by the between centres dimensions of the end feed connector bars to be protected.

Table of dimensions for ER N1 to N6 straight feed units

Rating (A)	Dimensions (mm)			
	Y	D	G	Z
1000 to 1600	230	238.5 to 493.5	238.5 to 493.5	100 to 400
2000 to 3200	350	238.5 to 493.5	238.5 to 493.5	100 to 400
4000 and 5000	510	238.5 to 493.5	238.5 to 493.5	100 to 400
6300	350	292.5 to 547.5	292.5 to 547.5	591 to 800

D = **K**/2 + **J** + 118.5(1)
G = **K**/2 + **M** + 118.5(1)
For the 3L + PE version, consider M = J to calculate the D and G quotations.
(1) = For calculating 5000A = D & G values.
D = **K**/2 + **J** + 172.5
G = **K**/2 + **M** + 172.5

DB428713-G

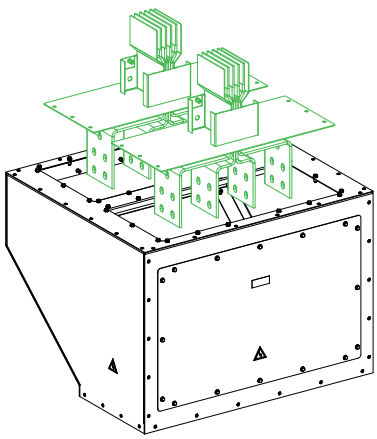

KTB0726CR3

Table of dimensions for ER N7 straight feed units

Rating (A)	Dimensions (mm)			
	Y	D	G	Z
1000 to 1600	230	220 to 475	220 to 475	100 to 400
2000 to 3200	350	220 to 475	220 to 475	100 to 400
4000 and 5000	510	220 to 475	220 to 475	100 to 400

D = **max (P ; Q)** + 100
G = **max (R ; S)** + 100
For the 3L + PE version, consider S = 0 to calculate the D and G quotations.

Protective covers for Minera transformers
IP55

Canalis KTC 1000 to 6300

CR7 - Protective covers for horizontal incomers

These covers are used to connect Canalis KT to Minera transformers.
Dimensions are predefined to match with transformer ratings.
Refer to the selection guide, see page 232.

Cat. no.	Y (mm)	Z (mm)	X (mm)	A (mm)	B (mm)	C (mm)	Weight (kg)
KTB0230CR71	230	450	320	780	650	256	30
KTB0350CR71	350	510	320	780	650	256	30
KTB0350CR72	350	540	350	780	650	256	30
KTB0350CR73	350	590	400	855	710	276	30
KTB0350CR74	350	590	400	855	710	359	30
KTB0510CR71	510	705	435	855	710	276	30
KTB0510CR72	510	740	470	855	710	359	30
KTB0510CR73	510	780	510	855	710	359	30
KTB0726CR71	350	1025	469	855	710	359	30

DB428456-G

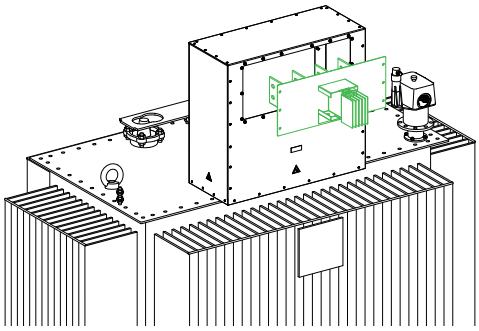

KTB●●●●CR7●

KTB●●●●CR7●

DB428457

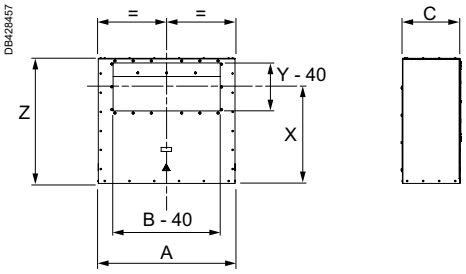

DB428638-G

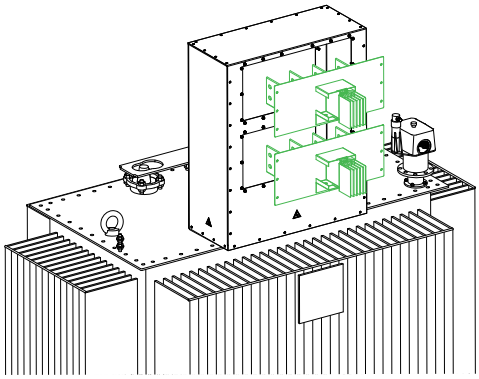

KTB0726CR71

KTB0726CR71

DB428638

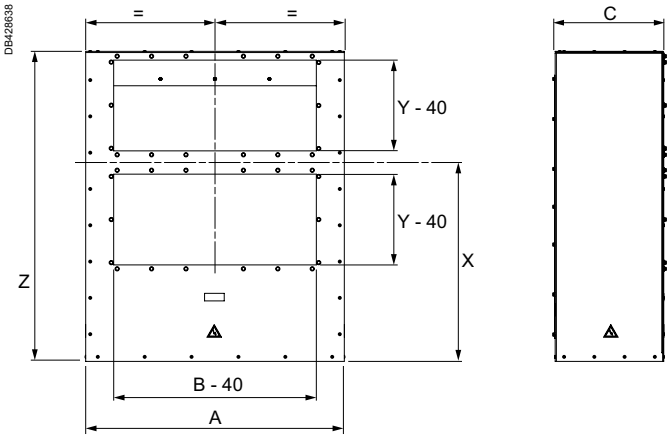

Interfaces selection guide, see page 232 and page 233

Protective covers for Minera transformers

IP55

Canalis KTC 1000 to 6300

CR8 - Protective covers for vertical incomers

These covers are used to connect Canalis KT to Minera transformers.
Dimensions are predefined to match with transformer ratings.
Refer to the selection guide, see page 234.

Cat. no.	Y (mm)	Z (mm)	A (mm)	B (mm)	C (mm)	Weight (kg)
KTB0230CR81	230	480	780	650	251	30
KTB0350CR81	350	580	780	650	380	30
KTB0350CR82	350	600	855	710	380	30
KTB0350CR83	350	520	855	710	380	30
KTB0510CR81	510	600	855	710	540	30
KTB0510CR82	510	615	855	710	540	30
KTB0726CR81	350	591	775	710	770	30

DB428458-G

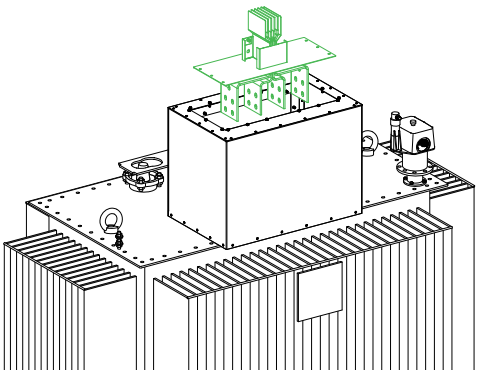

KTB●●●●CR8●

KTB●●●●CR8●

DB428459

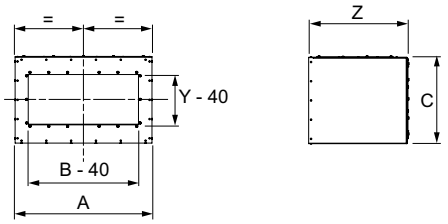

DB428640-G

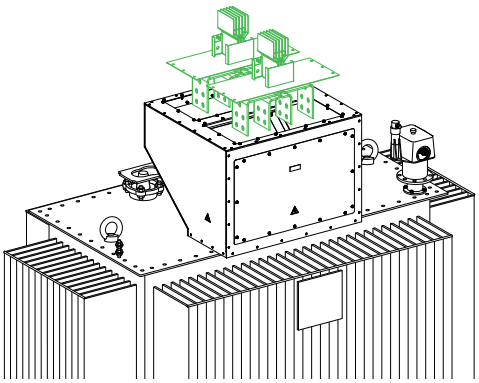

KTB0726CR81

KTB0726CR81

DB428641

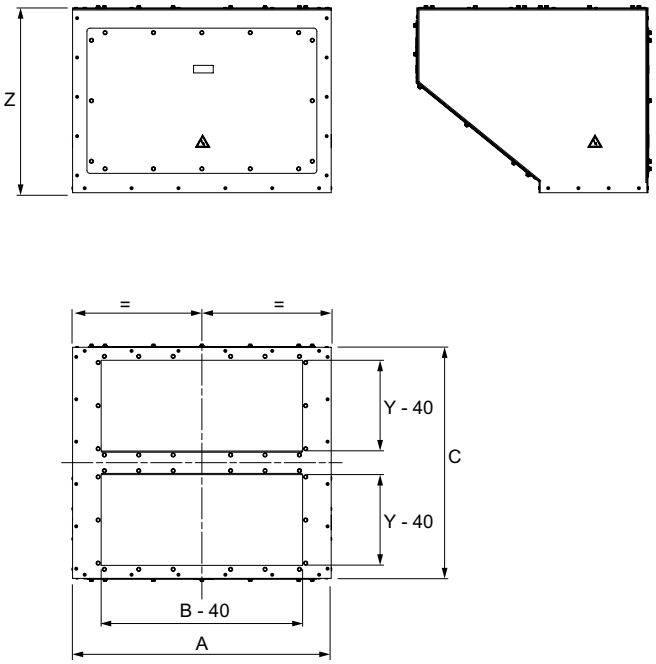

Interfaces selection guide, see page 234 and page 235

Flexible protective covers Cable boxes
IP55

Canalis KTC 1000 to 5000

CS - Flexible vertical protective covers for straight feed units

DD202318-G

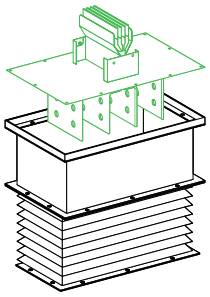

KTB●●●●CS0

Covers for ER N1 to N7 straight feed units with **between centre dimensions = 115 mm.**

Rating (A)	Dimensions "Y" (mm)	Cat. no.	Weight (kg)
1000 to 1600	230	**KTB0230CS0**	15.00
2000 to 3200	350	**KTB0350CS0**	17.00
4000 and 5000	510	**KTB0510CS0**	19.00

It is recommended to use insulating sheaths KTB0000YF1 with connection braids KTB0000YT1.

KTB●●●●CS0

DD202319

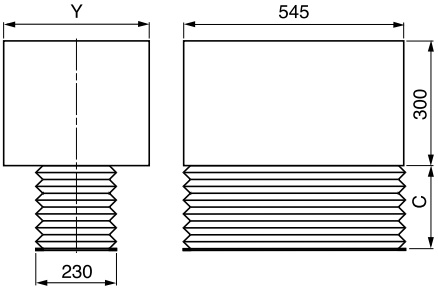

Table of dimensions

Rating (A)	Dimensions (mm)	
	Y	C
1000 to 1600	230	200 to 650
2000 to 3200	350	200 to 650
4000 and 5000	510	200 to 650

Cut-out drawing for fixing the flexible vertical protective cover

DD205922-G

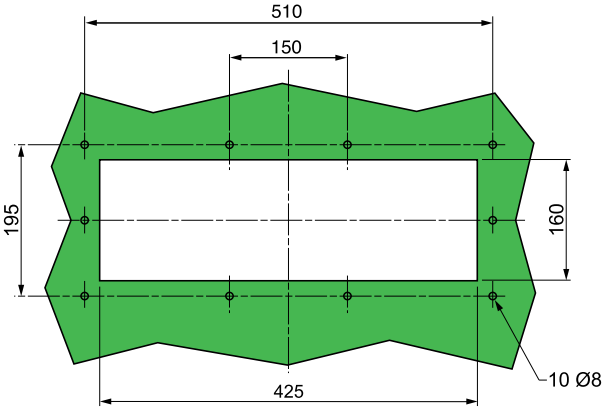

BC - Cable boxes

DD205923-G

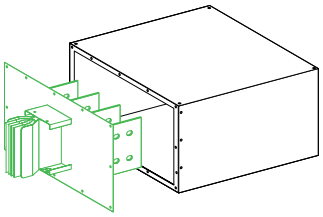

KTB●●●●BC01

Rating (A)	Dimensions "Y" (mm)	Cat. no.	Weight (kg)
1000 to 1600	230	**KTB0230BC01**	15.00
2000 to 3200	350	**KTB0350BC01**	17.00
4000 and 5000	510	**KTB0510BC01**	19.00

Cable boxes are only to be used on ER N1 to N6 straight feed units with standard **between centre distances = 115 mm.**

KTB●●●●BC01

DD205924-G

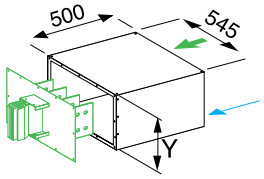

Cable entry.
Aluminium plate to be drilled.

Table of dimensions

Rating (A)	Dimensions (mm)
	Y
1000 to 1600	230
2000 to 3200	350
4000 and 5000	510

See table page 79 for connection pad dimensions.

Feed units for dry-type transformers
IP55

Canalis KTC 1000 to 5000

Ordering

Complete the catalogue number by replacing "●●●●" by the rating.
Important:
■ add the dimensions of the selected unit as a technical comment.

Example: the catalogue number of a 3200 A end feed unit, N2, 3L + N + PER, with a between centre distance E = 550 mm, length N = 310 mm and phase order T = 3N21 is:
KTC3200EL52, E = 550 mm, N = 310 mm and T = 3.

Rating

EL●1, EL●2 - N1 and N2 feed units for dry-type transformers

DD202329-G

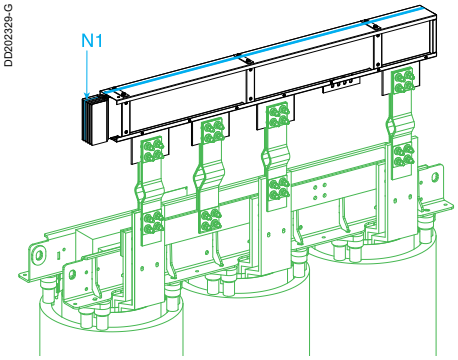

KTC●●●●EL●1

DD202331-G

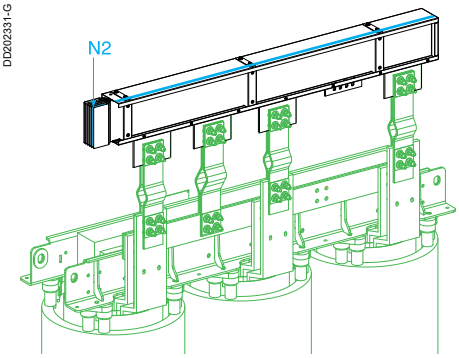

KTC●●●●EL●2

Type	Position of neutral	Cat. no.		
		3L + PE	3L + N + PE	3L + N + PER (1)
Made to measure	N1	KTC●●●●EL31	KTC●●●●EL41	KTC●●●●EL51
	N2	KTC●●●●EL32	KTC●●●●EL42	KTC●●●●EL52

(1) To order the 3L + N + PER version with reinforced Isc, replace KTC●●●●EL5● by KTC●●●●EL7●.

For an installation with flat mounted busbar trunking, add angle brackets between the transformer and the feed unit, see page 96.
For fixing supports, see KTB●●●●ZA4 page 106.

KTC●●●●EL●1, KTC●●●●EL●2

DD210330n

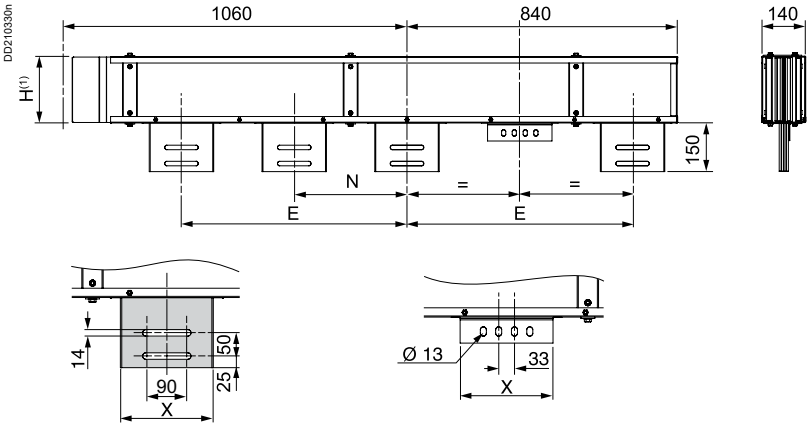

(1) See the "Trunking cross-section" table page 99.

Table of dimensions

Rating (A)	Neutral	Dimensions (mm)		
		E	N	X
1000 to 1600	N1, N2	390 to 700	195 to E - 195	160
2000 to 5000	N1, N2	470 to 700	235 to E - 235	200

Selecting phase order T

Top views

DD230220-G

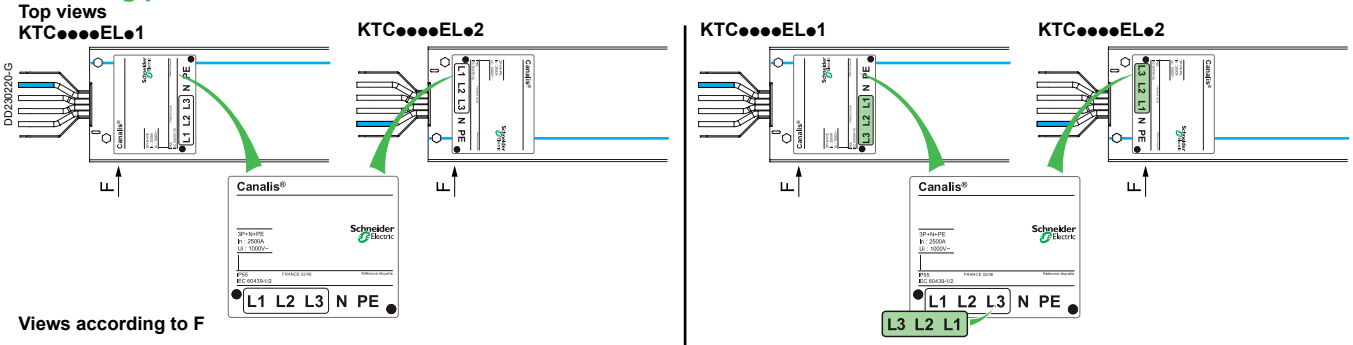

Views according to F

DD230219

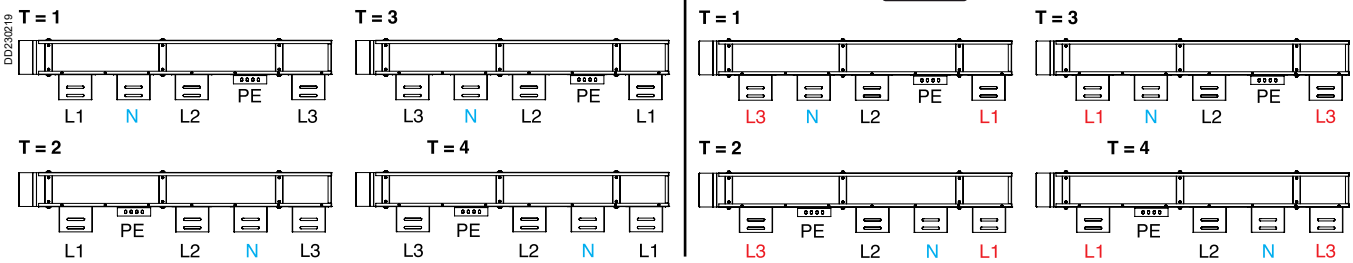

Canalis KTC 6300

EL●1, EL●2 - Feed units for dry-type transformers

DB428750-G

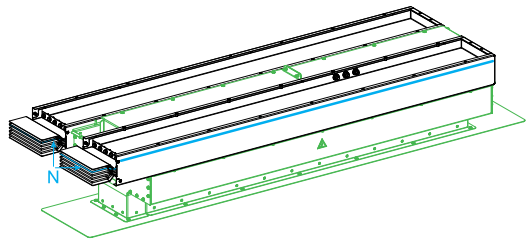

KTC6300EL●1

DB428751-G

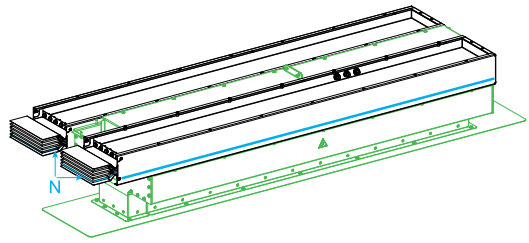

KTC6300EL●2

Type	Position of neutral	Cat. no.		
		3L + PE	3L + N + PE	3L + N + PER (1)
Made to measure	N1	KTC6300EL31	KTC6300EL41	KTC6300EL51
	N2	KTC6300EL32	KTC6300EL42	KTC6300EL52

(1) To order the 3L + N + PER version with reinforced Isc, replace KTC6300EL5● by KTC6300EL7●.

For an installation with flat mounted busbar trunking, add angle brackets between the transformer and the feed unit, see page 96.
For fixing supports, see KTB●●●●ZA4 page 106.

KTC6300EL●1, KTC6300EL●2

DB428686

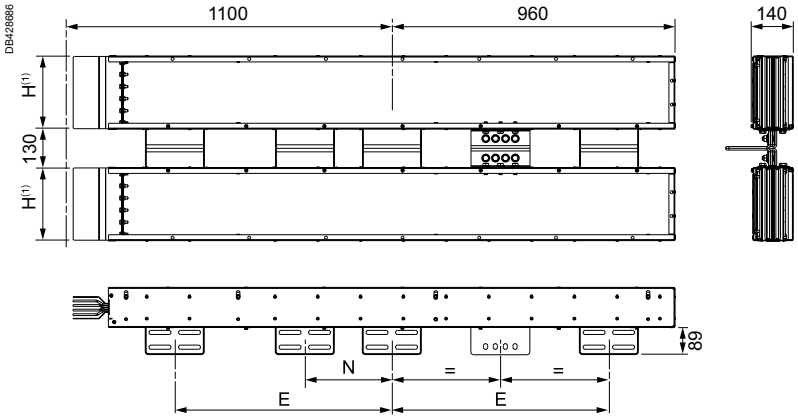

DB429055

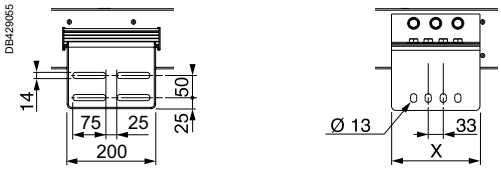

(1) See the "Trunking cross-section" table page 99.

Table of dimensions

Rating (A)	Neutral	Dimensions (mm)		
		E	N	X
6300	N1, N2	470 to 736	235 to E - 235	200

Selecting phase order T

DD230220-G

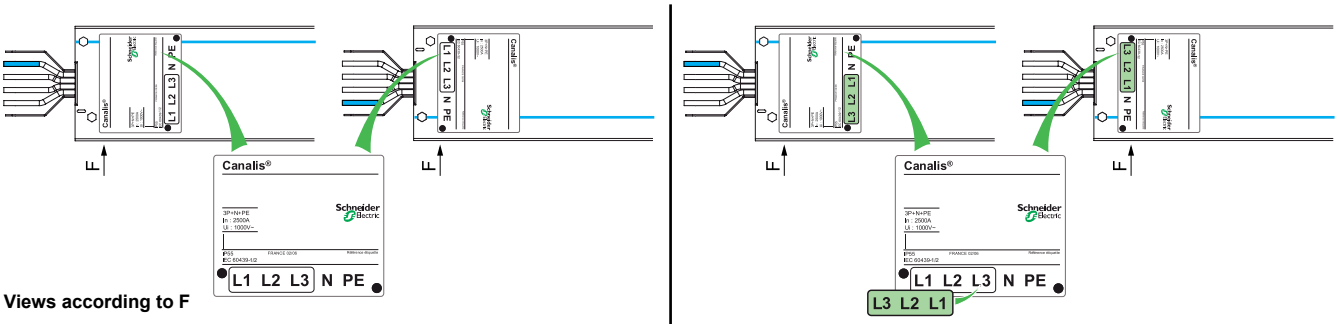

Views according to F

DD230219

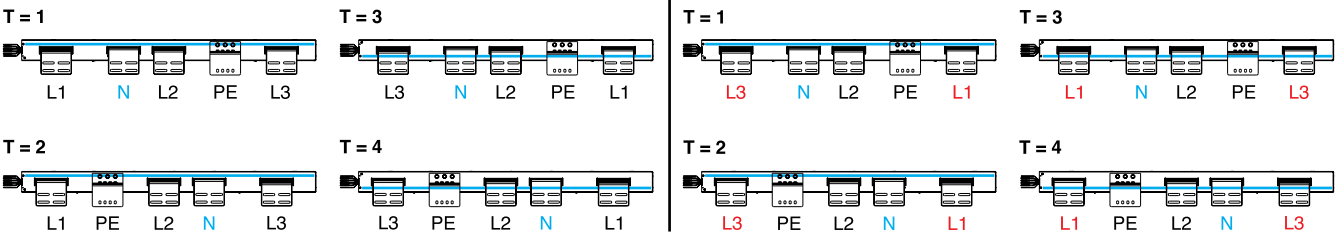

Feed units for dry-type transformers
IP55

Canalis KTC 1000 to 5000

EL•3, EL•4 - Feed units for dry-type transformers

DD202333-G

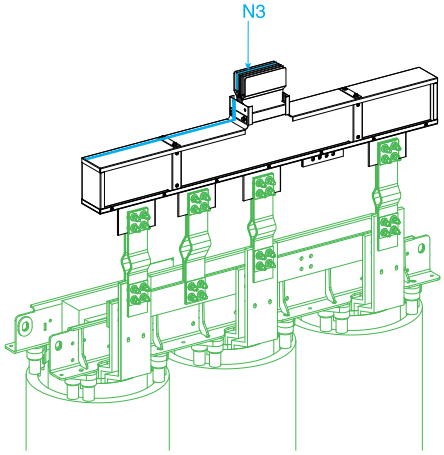

KTC••••EL•3

DD202334-G

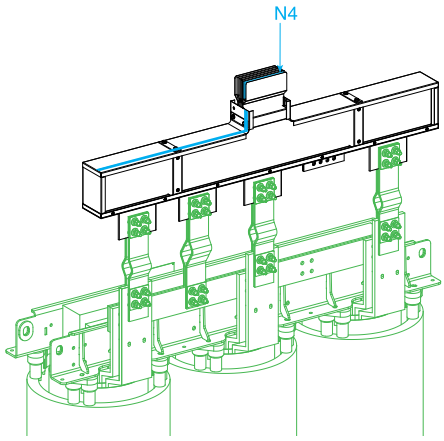

KTC••••EL•4

Type	Position of neutral	Cat. no.		
		3L + PE	3L + N + PE	3L + N + PER (1)
Made to measure	N3	KTC••••EL33	KTC••••EL43	KTC••••EL53
	N4	KTC••••EL34	KTC••••EL44	KTC••••EL54

(1) To order the 3L + N + PER version with reinforced Isc, replace KTC••••EL5• by KTC••••EL7•.

For an installation with flat mounted busbar trunking, add angle brackets between the transformer and the feed unit, see page 96.

For fixing supports, see KTB••••ZA4 page 106.

KTC••••EL•3, KTC••••EL•4

DD210335n

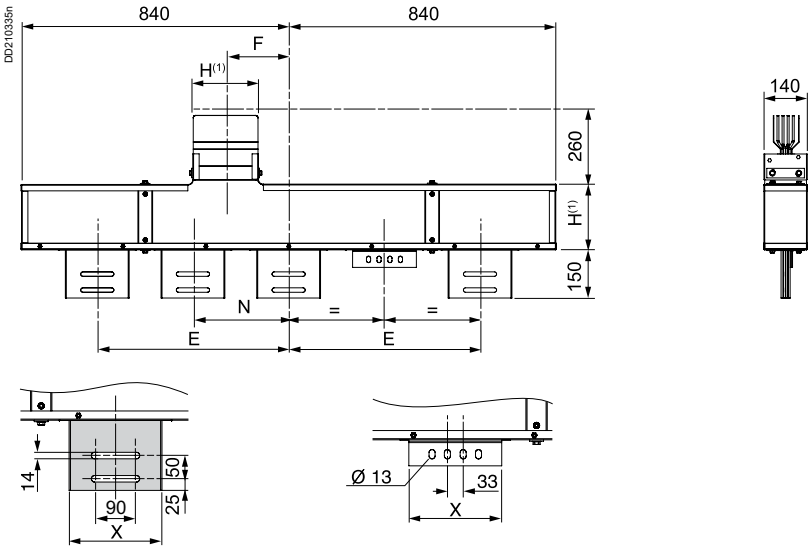

(1) See the "Trunking cross-section" table page 99.

Table of dimensions

Rating (A)	Neutral	Dimensions (mm)			
		E	N	F	X
1000 to 1600	N3, N4	390 to 700	195 to E - 195	0 to 200	160
2000 to 5000	N3, N4	470 to 700	235 to E - 235	0 to 200	200

Selecting phase order T

Top views

DD230222-G

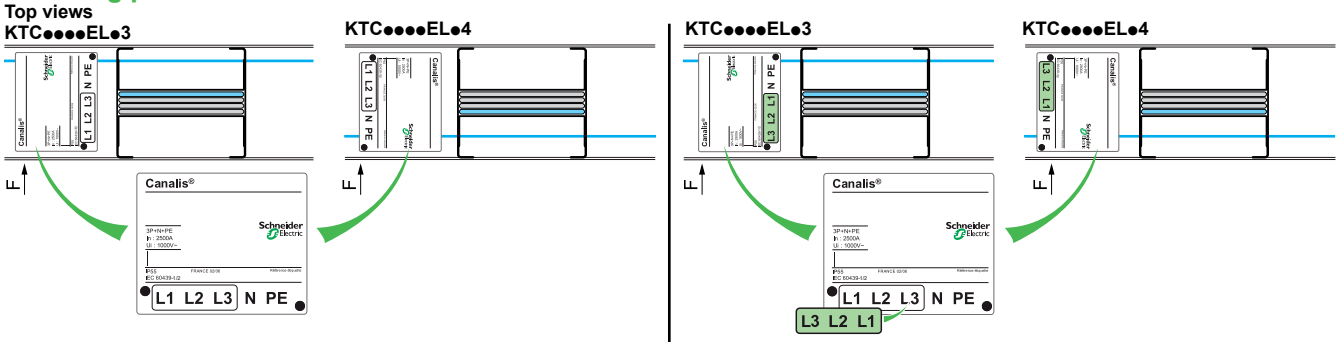

DD230221

Views according to F

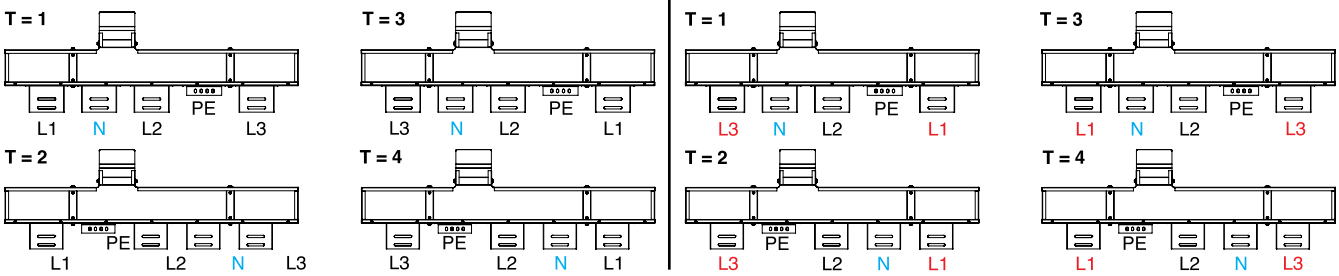

Canalis KTC 1000 to 6300

EL●5 - Feed units for dry-type transformers

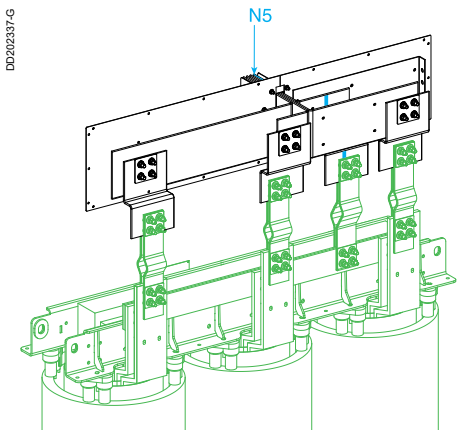

KTC●●●●EL●5

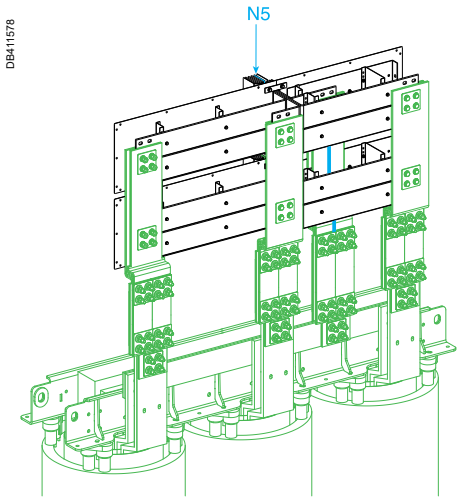

KTC6300EL●5

Type	Position of neutral	Cat. no. (2)		
		3L + PE	3L + N + PE	3L + N + PER (1)
Made to measure	N5	KTC●●●●EL35	KTC●●●●EL45	KTC●●●●EL55

(1) To order the 3L + N + PER version with reinforced Isc, replace KTC●●●●EL55 by KTC●●●●EL75.
(2) References KTC6300EL●5 are made of 2 references KTC3200EL●5.

For an installation with flat mounted busbar trunking, add angle brackets between the transformer and the feed unit, see page 96.

These end feed units are supplied with PEN connection kit.

KTC●●●●EL●5 with a phase order T = 2

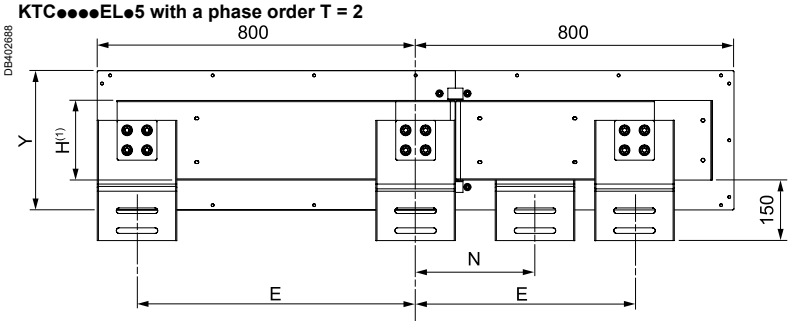

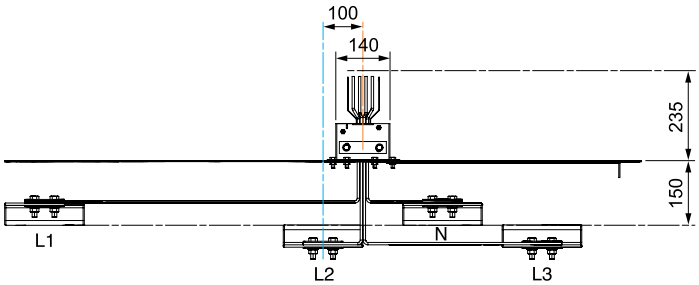

KTC●●●●EL●5 with a phase order T = 3

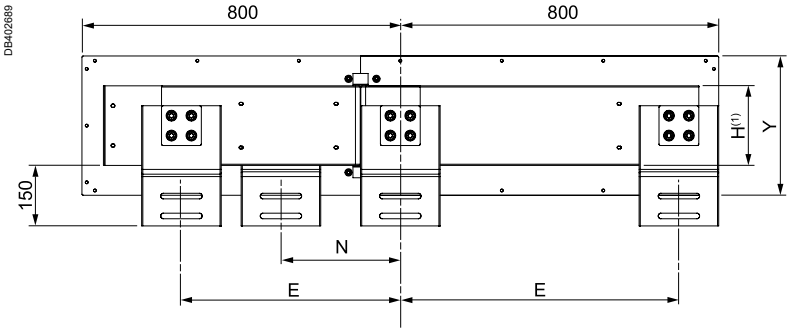

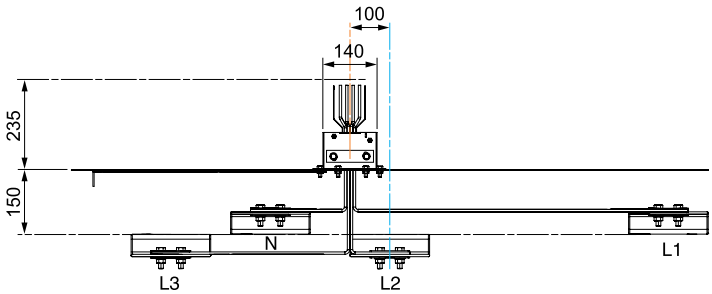

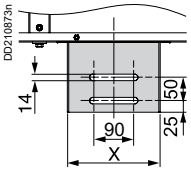

Table of dimensions

Rating (A)	Neutral	Dimensions (mm)			
		Y	E	N	X
1000 to 1600	N1, N2	230	390 to 700	195 to E - 195	160
2000 to 3200	N1, N2	350	470 to 700	235 to E - 235	200
4000 and 5000	N1, N2	510	470 to 700	235 to E - 235	200
6300	N5	350	550 to 700	275 to E - 275	200

(1) See the "Trunking cross-section" table page 99.
Important: the above designs and markings correspond to a phase order of N321, joint block side. If the phase order on the joint block side is N123, inverse markings L1 and L3 on the transformer side.

Feed units for dry-type transformers
IP55

Canalis KTC 1000 to 5000

YE - Angle brackets for installing N1 to N5 feed units flat

DD202340-G

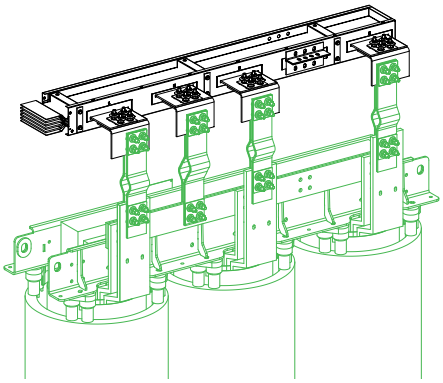

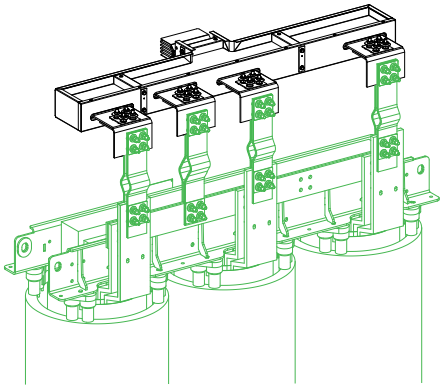

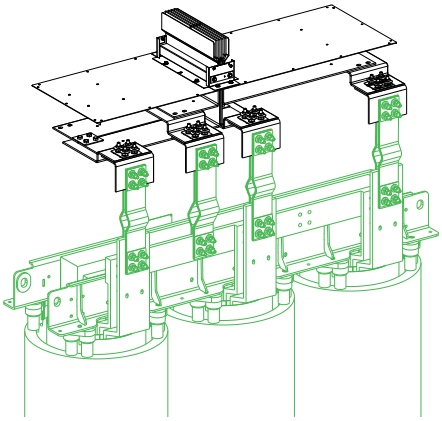

KTB0000YE1, KTB0000YE21

Description	Rating (A)	Phase width "X" (mm)	Cat. no.
4 angle brackets + screws	1000 to 1600	160	KTB0000YE1
	2000 to 2500	200	KTB0000YE21
8 angle brackets + screws	3200	200	KTB0000YE22
12 angle brackets + screws	4000 to 5000	200	KTB0000YE23

KTB0000YE1, KTB0000YE2●

DB411588

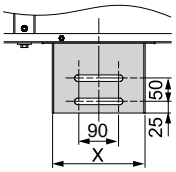

DB411581

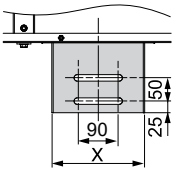

DB411582

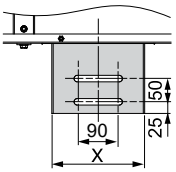

KTB0000YE1/KTB0000YE21

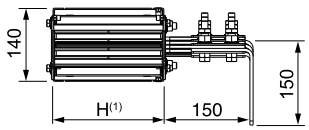

KTB0000YE22

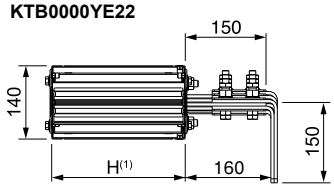

KTB0000YE23

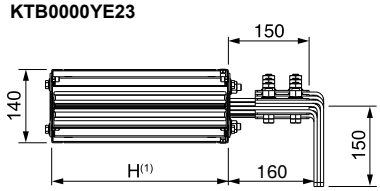

Protective covers for dry-type transformers
IP55

Canalis KTC 1000 to 5000

Ordering

There is no need to add technical comments to the catalogue number ordered.

CR4 - Adjustable vertical protective covers for EL, N1 to N4 feed units, edgewise mounting

DD202342-G

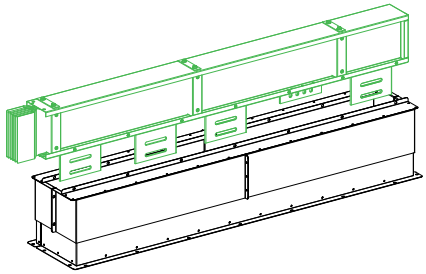

KTB0000CR4

Type	Position of neutral	Cat. no.	Weight (kg)
Vertical cover	N1, N2, N3 and N4	**KTB0000CR4**	24.00

KTB0000CR4

DD202344

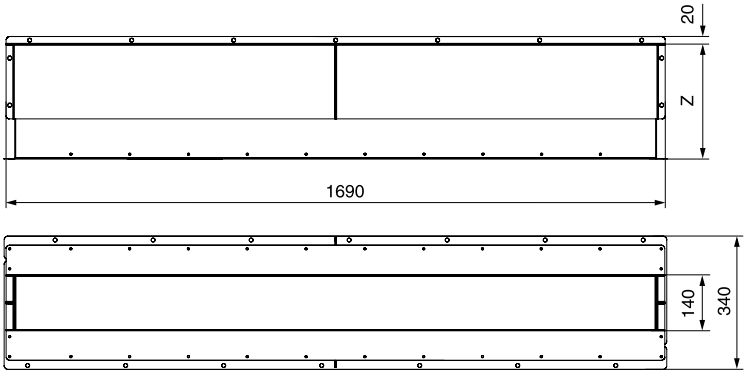

Table of dimensions

Rating (A)	Dimensions Z (mm)	
	Minimum	Maximum
1000 to 1600	200	350
2000 to 3200	200	350
4000 and 5000	200	350

CR5 - Adjustable horizontal protective covers for EL, N1 to N4 feed units, flat mounting

DB411590

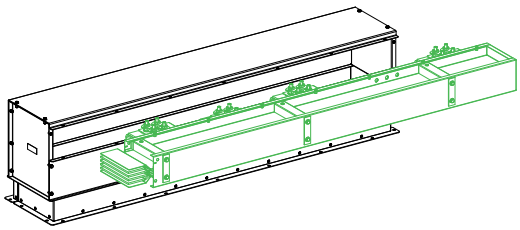

KTB0000CR5

Type	Position of neutral	Cat. no.	Weight (kg)
Horizontal cover	N1, N2, N3 and N4	**KTB0000CR5**	32.00

KTB0000CR5

DB411591

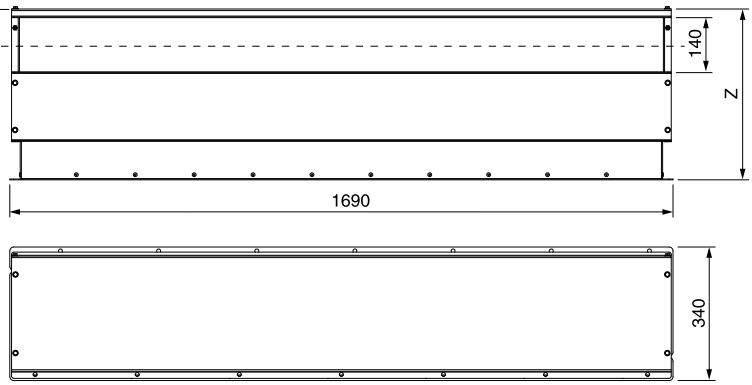

Table of dimensions

Rating (A)	Dimensions Z (mm)	
	Minimum	Maximum
1000 to 1600	370	520
2000 to 3200	370	520
4000 and 5000	370	520

Protective covers for dry-type transformers
IP55

Canalis KTC 1000 to 5000

CR6 - Horizontal protective covers for dry-type transformer N5 feed units

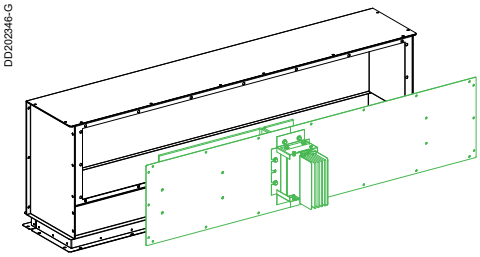

KTB●●●●CR6

Type	Position of neutral	Dimension "Y" (mm)	Cat. no.	Weight (kg)
Horizontal covers	N5	230	**KTB0230CR6**	38.00
		350	**KTB0350CR6**	40.00
		510	**KTB0510CR6**	47.00

KTB●●●●CR6

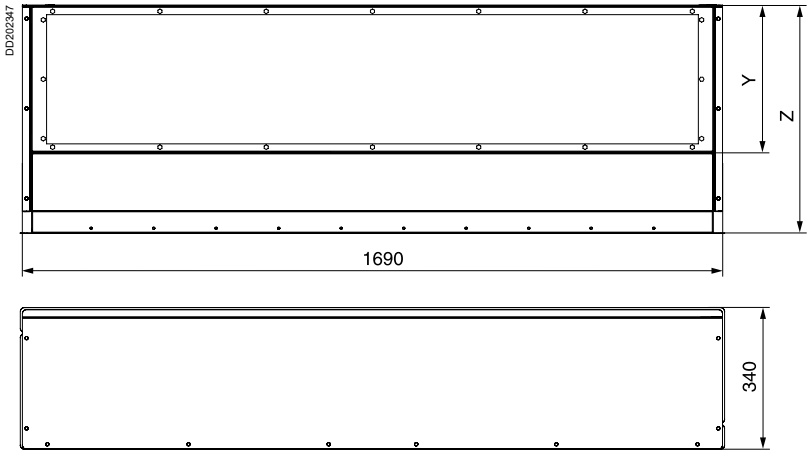

Table of dimensions

Rating (A)	Dimensions (mm)		
	Y	Z	
		Minimum	Maximum
1000 to 1600	230	380	530
2000 to 3200	350	500	650
4000 and 5000	510	660	810

Cut-out drawing for dry-type transformer feed units

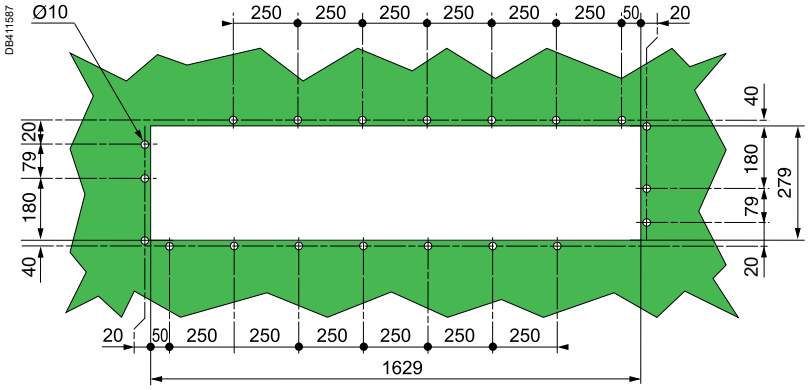

View from the top of the transformer.

Protective covers for dry-type transformers
IP55

Canalis KTC 6300

CR5 - Adjustable horizontal protective covers for EL, N1 and N2 feed units, flat mounting

DB428688-G

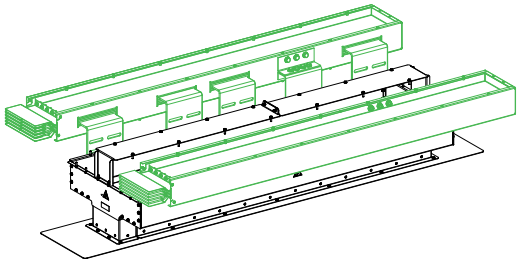

KTB0001CR5

Type	Position of neutral	Cat. no.	Weight (kg)
Horizontal cover	N1, N2	KTB0001CR5	60.00

DB428756

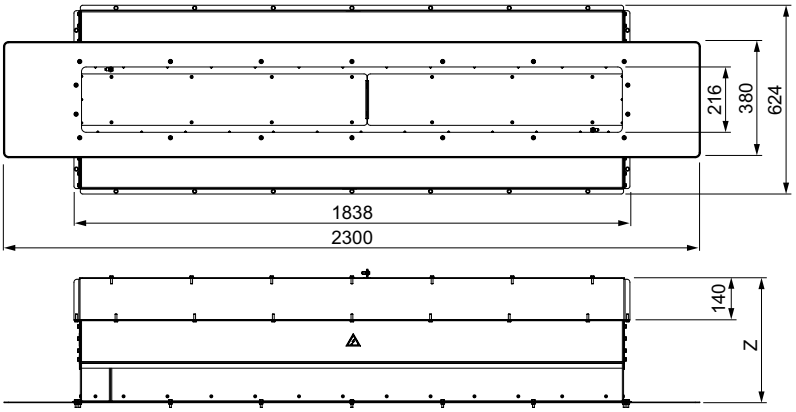

Table of dimensions

Rating (A)	Dimensions Z (mm)	
	Minimum	Maximum
6300	330	480

See "Connection to Trihal cast resin transformers", page 224.

CR6 - Adjustable horizontal protective covers for EL, N5 feed units, flat mounting

DB428765

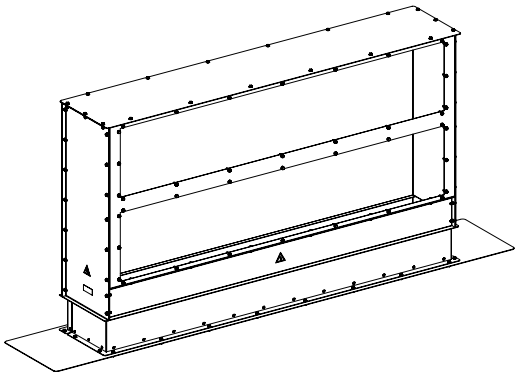

KTB0001CR6

Type	Cat. no.	Weight (kg)
Horizontal cover	KTB0001CR6	60.00

DB428690

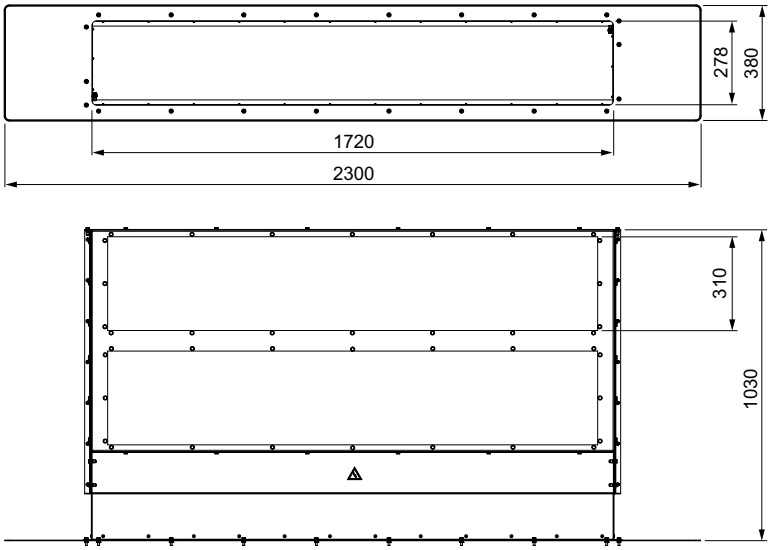

Trunking cross-section

Rating (A)		1000	1350	1600	2000	2500	3200	4000	5000	6300
Weight (kg/m)	3L + PE	19	25	29	36	44	51	66	82	102
	3L + N + PE	23	31	35	45	55	64	84	104	128
	3L + N + PER	25	33	39	49	60	71	92	114	142

Height H (mm)
Width W (mm)

DD210867

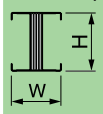

DB411584

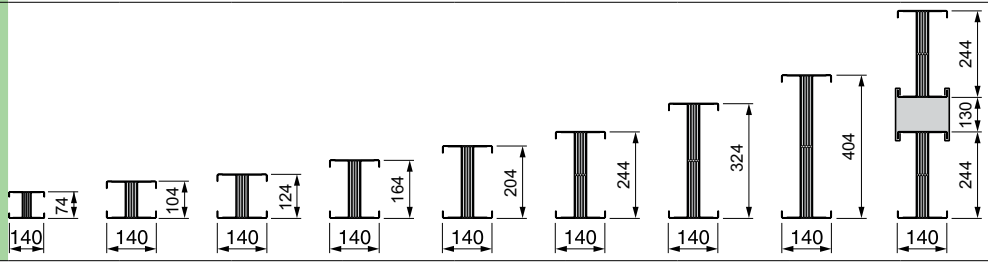

Canalis KTC 1000 to 6300

Ordering

To order YC1 or YC3 flexibles with customized drilled holes at the bottom
Example: total length = 565 mm with a pattern of 4 centred holes 50x50 at 25 mm of the bottom.
KTB0100YC305B, L=565, A=50, B=25, C=25, D=50, E=2, F=2, Y=25.

To order flexibles without drilled holes at the bottom.
Example: total length = 435 mm.
KTB0100YC305B, L=435, E=0, F=0, Y=25.

In all cases E, F and Y need to be filled.

YC1 - Made to measure flexible links

Type	Surface treatment	"Width (mm) W"	"Depth (mm) T"	"Length (mm) L"	Cross-section (mm²)	Cat. no.	Weight (kg)
Made to measure	Bare copper(2)	100	5	300 to 600	500(1)	**KTB0100YC105B**	2.7
		120	5	300 to 600	600(1)	**KTB0120YC105B**	3.2

(1) Made of 5 sheets 1 mm (100 % CU).
(2) The number of bi-metal alumunium copper connections per phase is the same as bare copper.
Note: 2 (100 x 5) bare copper can be replaced by 2 (100 x 7) bi-metal aluminium copper.

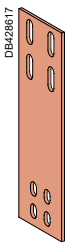

KTB01●0YC105B
Bare copper

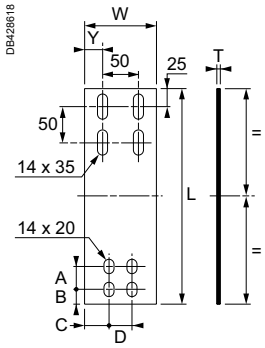

Dimensions

Dimensions (mm)
L
A
B
C
D
E
F
Y

- E = number of vertical holes (bottom pattern)
- F = number of horizontal holes (bottom pattern)

YC3 - Made to measure flexible links

Type	Surface treatment	"Width (mm) W"	"Depth (mm) T"	"Length (mm) L"	Cross-section (mm²)	Cat. no.	Weight (kg)
Made to measure	Bare copper(2)	100	5	300 to 600	500(1)	**KTB0100YC305B**	2.7
		120	5	300 to 600	600(1)	**KTB0120YC305B**	3.2

(1) Made of 5 sheets 1 mm (100 % CU).
(2) The number of bi-metal alumunium copper connections per phase is the same as bare copper.
Note: 2 (100 x 5) bare copper can be replaced by 2 (100 x 7) bi-metal aluminium copper.

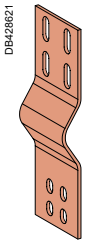

KTB01●0YC305B
Bare copper

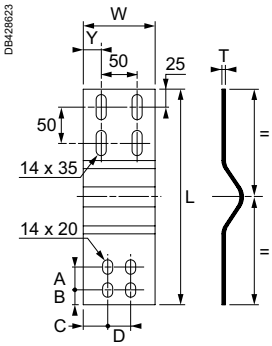

Dimensions

Dimensions (mm)
L
A
B
C
D
E
F
Y

- E = number of vertical holes (bottom pattern)
- F = number of horizontal holes (bottom pattern)

Connection selection guide:
refer page 227 for cast resin transformer,
refer page 232 and page 234 for Minera immersed transformer

Canalis KTC 1000 to 6300

YC5 - Insulated flexible links

Type	Surface treatment	"Width (mm) W"	"Depth (mm) T"	"Length (mm) L"	Cross-section (mm²)	Cat. no.	Weight (kg)
Fixed, insulated	Bare copper(2)	100	5	1000	500(1)	**KTB0100YC50510B**	4.5
		100	5	600	500(1)	**KTB0100YC50506B**	2.7

(1) Made of 5 sheets 1 mm (100 % CU).
(2) The number of bi-metal alumunium copper connections per phase is the same as bare copper.
Note: 2 (100 x 5) bare copper can be replaced by 2 (100 x 7) bi-metal aluminium copper.

KTB0100YC505●●B
Insulated, bare copper

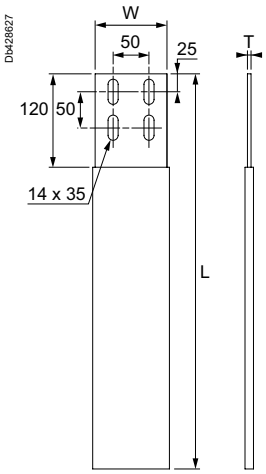

Connection selection guide:
refer page 227 for cast resin transformer,
refer page 232 and page 234 for Minera immersed transformer

Canalis KTC 1000 to 6300

YT - Braids

KTB0000YT1

Description	Cat. no.	Weight (kg)
Connection braid	KTB0000YT1	2.80

KTB0000YT1

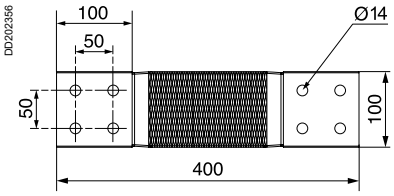

Determining the number of braids required

Busbar trunking rating (A)	Braids per phase	
	Number	Cross-section (mm²)
1350	2	1200
1600	2	1200
2000	2	1200
2500	3	1800
3200	3	1800
4000	4	2400
5000	5	3000
6300	8	4000

Braids	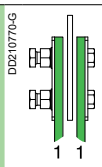	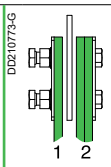	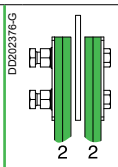	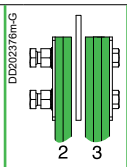	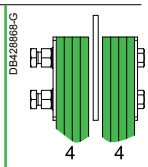
Busbar trunking rating (A)	1350 to 2000	2500 to 3200	4000	5000	6300

Canalis KTC 1000 to 6300

YF - Insulating sheaths

DD205939-G

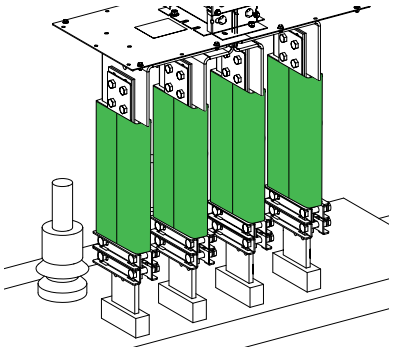

KTB0000YF1

The YF conduit allows the various conductors of a connection performed with braids or with bare copper foils to be insulated.
Installation is performed after complete assembly of the connection, with scratch fastening for easier setup.
The insulating conduit is formed of a 2-metre plastic duct that can be cut to length as needed.

Désignation	Cat. no.	Weight (kg)
Insulating sheath	**KTB0000YF1**	1.00

KTB0000YF1

DD202479

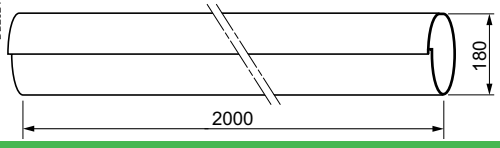

YB - Spacers and bolts

DD202363-G

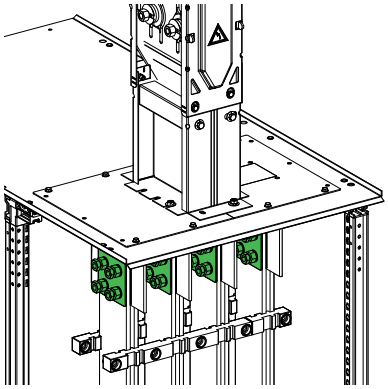

KTB0000YB2

Description		Cat. no.	Weight (kg)
Connection torque nut kit	1 torque nut + 2 flat washers (Ø 60) + 1 elastic washer (Ø 55)	**KTB0000YB1**	-
Spacers for direct connection	8 x 3 mm galvanized steel plates + 8 x 2 mm copper spacers + 16 x M12 x 60 bolts + washers and nuts	**KTB0000YB2**	5.50
Spacer plates for connector plate connections	8 x 3 mm galvanized steel plates + 16 x M12 x 60 bolts + washers and nuts	**KTB0000YB3**	4.00
	8 x 3 mm galvanized steel plates + 16 x M12 X 80 bolts + washers and nuts	**KTB0000YB4**	4.00
Set of bolts	16 x M10 x 60 bolts + washers and nuts	**KTB0000YB5**	2.00

DD230233-G

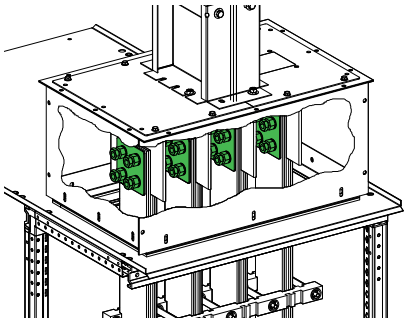

KTB0000YB3

Copper spacer

DD202365

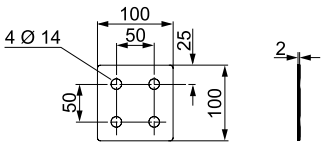

Galvanized steel spacer plates

DD202366

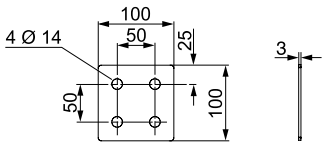

DD202364-G

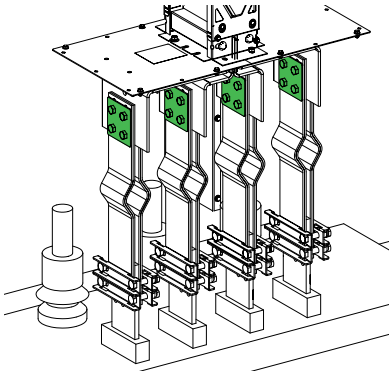

KTB0000YB4

DB428842-G

KTB0000YB5

Canalis KTC 1000 to 6300

YS - Bar supports

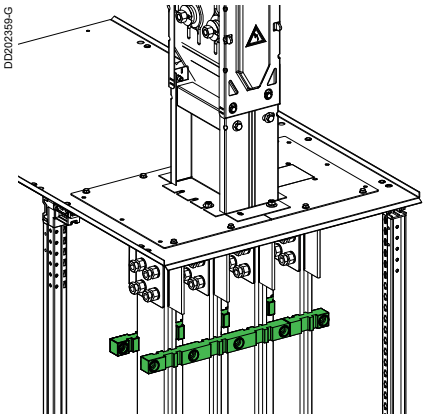

KTB0000YS1

Description	Cat. no.	Weight (kg)
Bar support, 115 mm between centres for bar of 2x5 or 10 mm	**KTB0000YS1**	2.40

KTB0000YS1

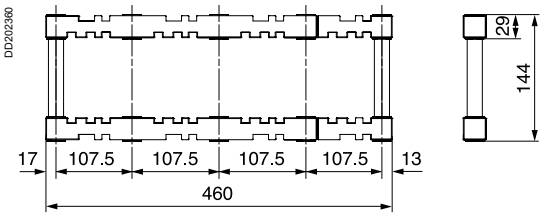

YS - Bar clamps

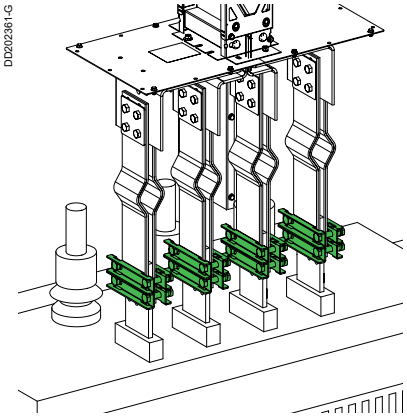

KTB0000YS●

Description	Dimensions of transformer connection terminals (mm)	Cat. no.	Weight (kg)
8 bar clamps	100	**KTB0000YS2**	6.40
	120	**KTB0000YS3**	6.40

Each bar clamp includes 2 cross members and associated fixings.

KTB0000YS2

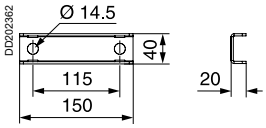

KTB0000YS3

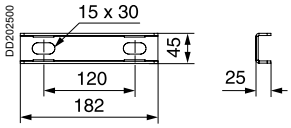

YP1 - Connection plate for oil immersed Minera transformer

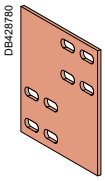

KTB0000YP1●

Type YP1

Plates for Minera oil transformer, connection from the top.
The product reference is for one phase.
Bolts at the equipments level are not included in the reference.
See selection table page 235.

A (mm)	B (mm)	H (mm)	W (mm)	X (mm)	Y (mm)	Cat. no.	Weight (kg)
20	28	200	200	28	20	**KTB0000YP11**	2.1
20	38	200	200	38	20	**KTB0000YP12**	2.1
20	28	200	260	28	20	**KTB0000YP13**	2.8
25	25	200	200	25	21	**KTB0000YP14**	2.1

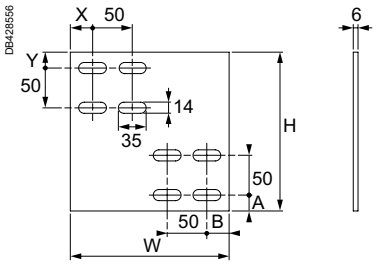

Connection selection guide, see page 233 and page 235

Canalis KTC 6300

YP2 - Connection plates for KTC6300 end feed units

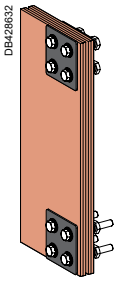

KTB0000YP21

Type YP21 for ER1 to ER6 horizontal incomer

Plates to link connection pads of 2 end feed units KTC3200 (ER1 to ER6) in order to create a KTC6300.
Link to transformer or switchboard has to be connected at the lowest 4 bolts system.
The product reference is for one phase and includes screws, nuts and washers at the busbar trunking side.
Bolts at the transformer or switchboard level are not included in the reference.

	Cat. no.	Weight (kg)
1 set of plates and bolts for 1 phase	**KTB0000YP21**	21

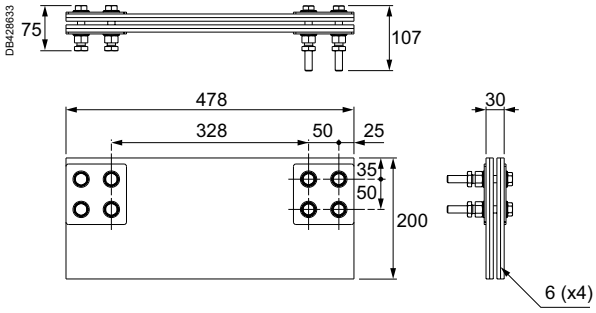

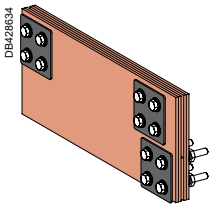

KTB0000YP22

Type YP22 for ER1 to ER6 vertical incomer

Plates to link connection pads of 2 end feed units KTC3200 (ER1 to ER6) in order to create a KTC6300.
The product reference is for one phase and includes screws, nuts and washers at the busbar trunking side.
Bolts at the transformer or switchboard level are not included in the reference.

	Cat. no.	Weight (kg)
1 set of plates and bolts for 1 phase	**KTB0000YP22**	24.5

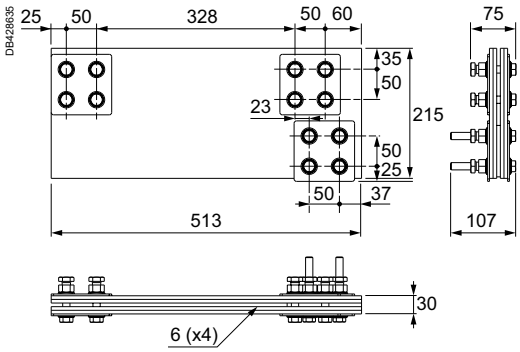

Connection selection guide, see page 233 and page 235

Canalis KTC

ZA1, ZA4 - Supports for edge wise horizontal installation

DD202372m-G

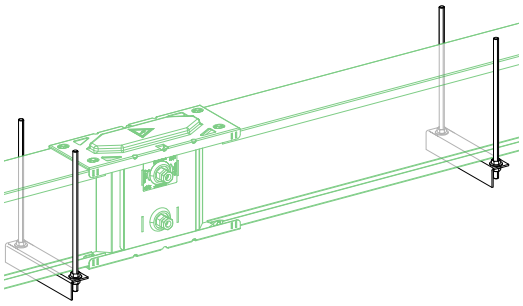

KTB0000ZA1

Description	Rating (A)	Busbar trunking height (mm)	Cat. no.	Weight (kg)
1 support from the bottom (threaded rods **supplied**)(1)	-	-	**KTB0000ZA1**	2.80
Set of 2 supports from the top (threaded rods **not supplied**)	1000 A	74	**KTB0074ZA4**	3.20
	1350 to 5000	104 to 404	**KTB0404ZA4**	3.80

KTB0000ZA1

DD202370

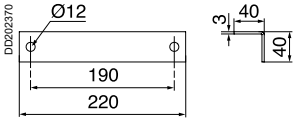

DD202368m-G

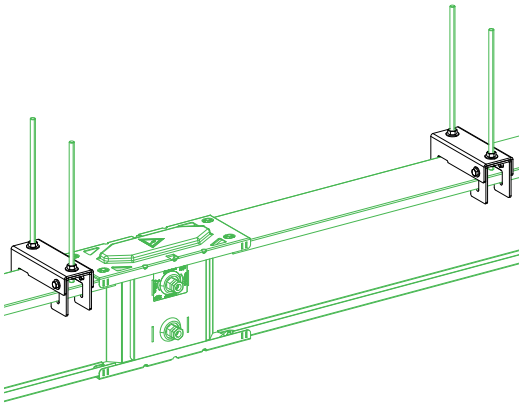

KTB●●●●ZA4

KTB●●●●ZA4

DD202371

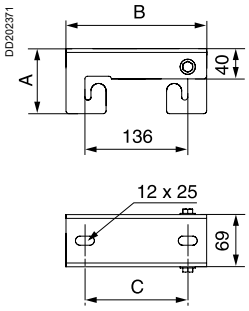

Table of dimensions

Height "H" (mm)	Dimensions (mm)		
	A	B	C
74	74	160	110
104 to 404	86	186	136

(1) Threaded rods, length = 2 metres, are supplied with the support.

ZA3 - Hooks for edge wise horizontal installation

DB411342

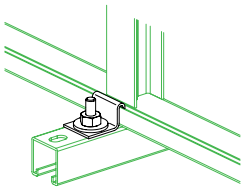

KTB0000ZA3

2 fixing grips are needed for each fixing point.

Description	Cat. no.	Weight (kg)
1 set of 8 hooks	**KTB0000ZA3**	0.60

KTB000ZA3

DB411438

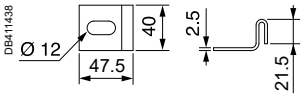

ZA7 - Supports for flat wise horizontal installation (41 x 41)

DB428770-G

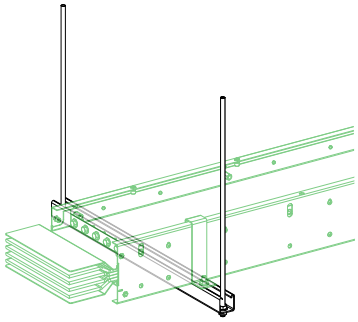

KTB●●●●ZA7

Busbar trunking rating (A)	Busbar trunking height "H" (mm)	Length L (mm)	Cat. no.	Weight (kg)
1000 to 1600(1)	74, 104, 124	280	**KTB0124ZA7**	0.6
2000, 2500(1)	164, 204	350	**KTB0204ZA7**	0.7
3200(1)	244	420	**KTB0244ZA7**	0.9
4000(1)	324	490	**KTB0324ZA7**	1
5000(1)	404	560	**KTB0404ZA7**	1.2
6300(1)	622	770	**KTB0622ZA7**	1.6
To be customized(2)	All	3000	**KTB0000ZA7**	6.5

(1) Threaded rods, length = 2 meters, are supplied with the support.
(2) Threaded rods not supplied.

DB428771-G

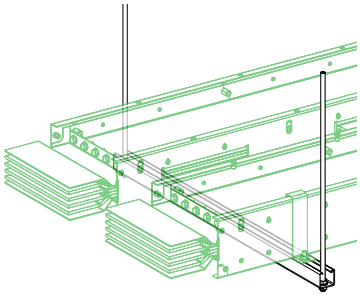

KTB0622ZA7

DB428864

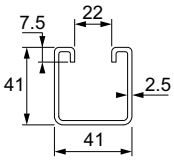

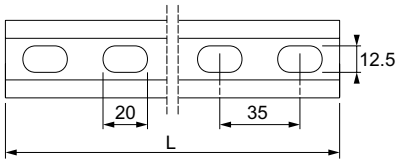

ZA8 - Bracket for flat wise horizontal installation

DB428722-G

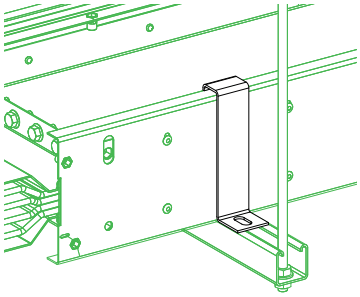

KTB0000ZA8

2 brackets are needed for each fixing point.

Description	Cat. no.	Weight (kg)
1 set of 8 brackets	**KTB0000ZA8**	0.14

Supplied with a spacer for fixation of KT●●●●ED●●●●.
T-bolts are not supplied with this reference.

DB428797

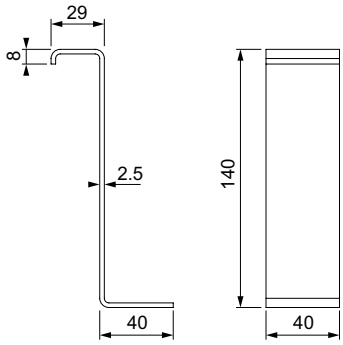

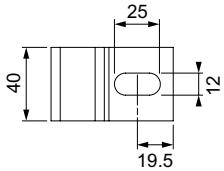

YB6 - T-Bolts

DB428911

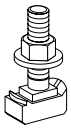

KTB0000YB6

DB428912-G

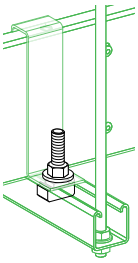

Description	Cat. no.	Weight (kg)
1 box of 50 bolts M10 x 35 for rails 41 x 41	**KTB0000YB6**	6.0

Includes T-screws, nuts and washers.

Canalis KTC

ZA5 - Vertical supports

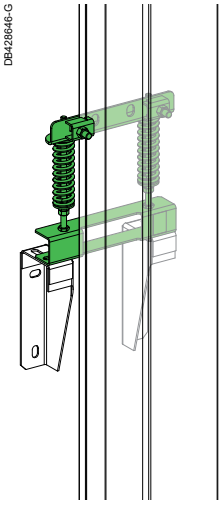

Vertical support KTB0164ZA51

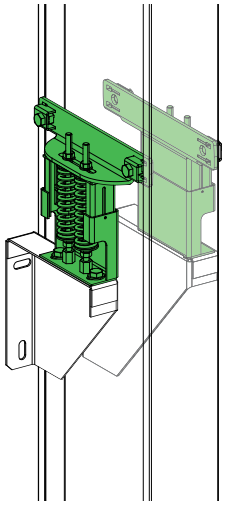

Vertical support KTB0204ZA51 to KTB0404ZA51

Description	Rating (A)	Busbar trunking height (mm)	Vertical support Cat. no.	Vertical support Weight (kg)	Wall bracket Cat. no.	Wall bracket Weight (kg)
Fixings	1000 to 2000	74 to 164	**KTB0164ZA51**	2.1	**KTB0164ZA52**	2
	2500	204	**KTB0204ZA51**	6.9	**KTB0204ZA52**	3.2
	3200	244	**KTB0244ZA51**	7.1	**KTB0244ZA52**	3.5
	4000	324	**KTB0324ZA51**	7.6	**KTB0324ZA52**	4.2
	5000	404	**KTB0404ZA51**	8.4	**KTB0404ZA52**	4.2

For further detail see page 198.

KTB0164ZA5●

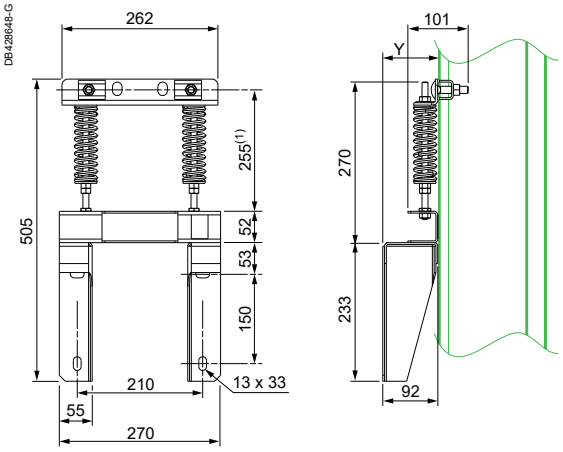

(1) Dimensions with free springs.

Table of dimensions

Rating (A)	Dimensions "Y" (mm)
All	50 < Y < 100

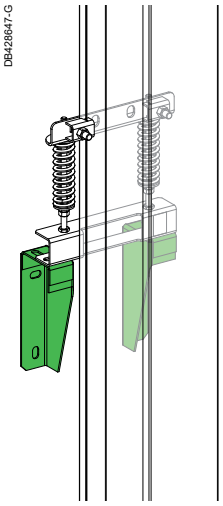

Wall bracket KTB0164ZA52

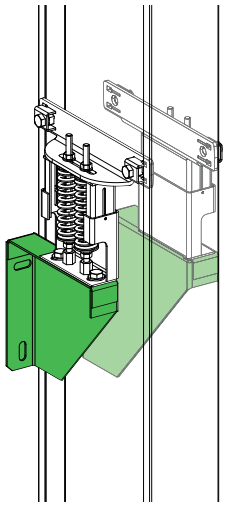

Wall bracket KTB0204ZA52 to KTB0404ZA52

KTB0204ZA5● to KTB0404ZA5●

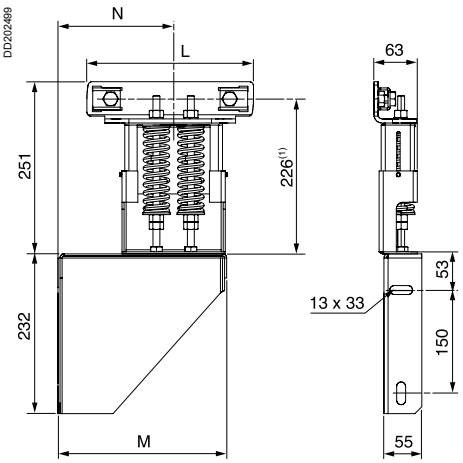

(1) Dimensions with free springs.

Table of dimensions

Rating (A)	Dimensions (mm) L	M	N
2500	202	205	152 to 202
3200	240	245	172 to 222
4000	322	325	212 to 262
5000	402	325	252 to 302

Trunking cross-section

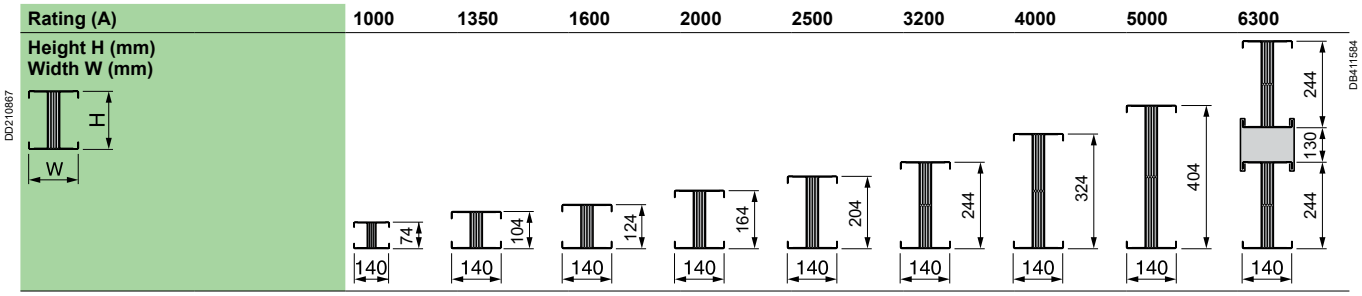

Canalis KTC 1000 to 6300

CF - Fire-barrier

DB428683-G

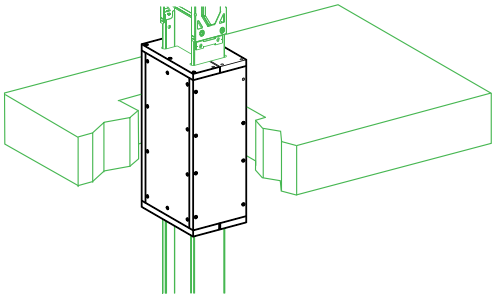

Type	Busbar trunking rating (A)	Busbar trunking height "H" (mm)	Fire barrier length	Cat. no.
Fire-barrier kit	1000	74	650	**KTB0074CF6**
	1350	104	650	**KTB0104CF6**
	1600	124	650	**KTB0124CF6**
	2000	164	750	**KTB0164CF7**
	2500	204	750	**KTB0204CF7**
	3200	244	750	**KTB0244CF7**
	4000	324	950	**KTB0324CF9**
	5000	404	950	**KTB0404CF9**
	6300	244 X 2	750	**KTB0622CF7** (1)

The filler material around the busbar trunking must meet the requirements currently in force to guarantee that the wall and ceiling fire-resistance class (for example DIN 1045 and DIN 1053-1) is maintained.
Filler material not supplied.
(1) This reference includes a sealant cartridge KTB0000SC1.

DB404826

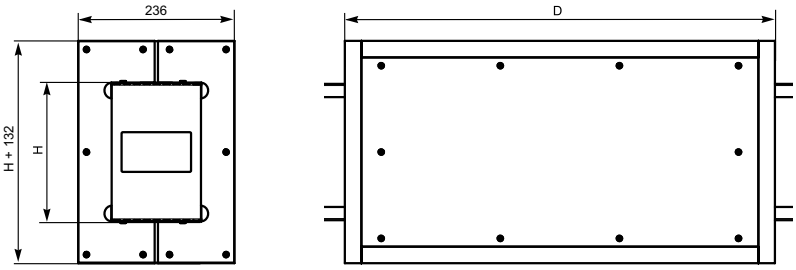

The fire barrier kit can also be made up on site by the installer according to Schneider Electric's drawings and specifications.
For further information, consult your sales office.

DB428689-G

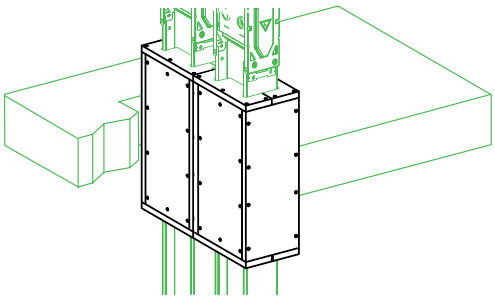

KTB0622CF7 + KTB0000SC1

DB428690

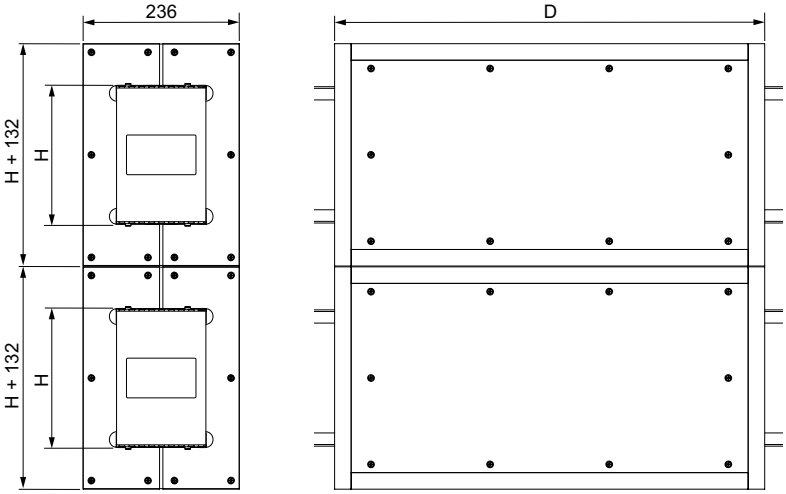

SC - Fire-barrier sealant cartridge

DB429006

KTB0000SC1

Type	Cat. no.
Fire-barrier sealant cartridge	**KTB0000SC1**

Plug-in tap-off units (for Canalis KT Only)
For Modular devices

Canalis KTC

Tap-off units with isolator, not equipped
Disconnection by opening the tap-off unit cover

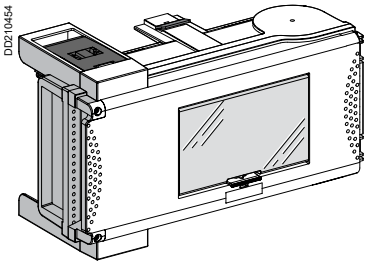

KSB63SM●8, KSB100SM●12

Tap-off unit disconnection by opening or closing the cover should be carried out only if the downstreamload is de-energised.

System earthing arrangement	Busbar trunking	TT-TNS-TNC-IT (1)	TNC
	Tap-off unit	TT-TNS-TNS-IT (1)	TNC
Tap-off polarity		3L + N + PE (2)	3L + PEN
Tap-off diagram (e.g. circuit breaker protection)		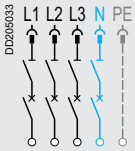	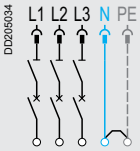

Rating (A)	Number of 18 mm modules(3)	Connection	Max. size (mm²) Flexible	Max. size (mm²) Rigid	Cable gland (4) (not supplied)	Cat. no.	Cat. no.	Weight (kg)
63(5)	8	On devices	16	16	ISO 50 max.	**KSB63SM48**	**KSB63SM58**	2.40
100(5)	12	On devices	35	35	ISO 63 max.	**KSB100SM412**	**KSB100SM512**	5.00

(1) The neutral must be protected or not distributed (3L + PE) for the IT system.
(2) Also suitable for tap-off unit 3L + PE (N not distributed, IT system also possible).
(3) Supplied with blanking plates: 1x5 divisible (8 modules) or 2x5 divisible (12 modules).
(4) Maximum diameter for a multipolar cable.
(5) IP55 Rating.

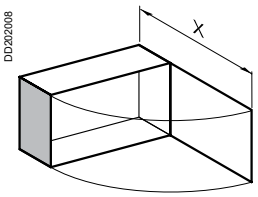

X = 432.5 (KSB63SM●8)
X = 545.5 (KSB100SM●12)

KSB63SM●8, KSB100SM●12

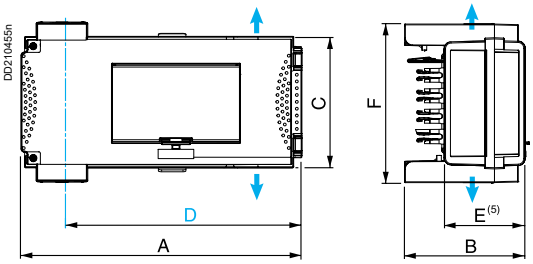

Cable exit
Centre line of tap-off outlets
(6) Protruding

Dimensions	Rating (A) 63	Rating (A) 100
A	357	444
B	158	183
C	167	202
D	309	397
E	108	133
F	202	220

Tap-off units for NG modular devices, not equipped

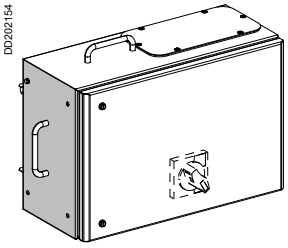

KSB160SM●13

The cover of the tap-off unit may be opened or closed only when the circuit breaker is in the Off position.

System earthing arrangement	Busbar trunking	TT-TNS-TNC-IT [1]	TNC
	Tap-off unit	TT-TNS-TNS-IT [1]	TNC
Tap-off polarity		3L + N + PE [2]	3L + PEN
Tap-off diagram (e.g. circuit breaker protection)		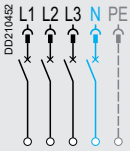	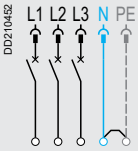

Rating (A)	Type of circuit-breaker	Connection	Max. size (mm²) Flexible	Max. size (mm²) Rigid	Cable gland [3] (not supplied)	Cat. no.	Cat. no.	Weight (kg)
160[5]	NG125 Rotary handle 19088 [4] NG160 Rotary handle 28060 [4]	Terminals	50	70	ISO 25 max.	**KSB160SM413**	**KSB160SM513**	8.50

(1) The neutral must be protected or not distributed (3L + PE) for the IT system.
(2) Also suitable for tap-off unit 3L + PE (N not distributed, IT system also possible).
(3) Maximum diameter by unipolar cable.
(4) Not supplied.
(5) IP55 Rating.

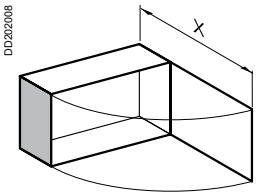

X = 625.5

KSB160SM●13

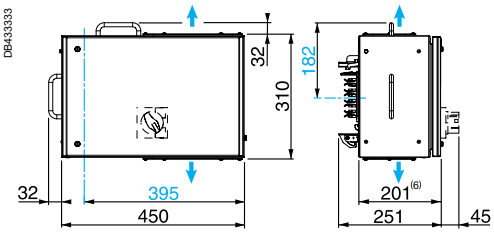

Cable exit
Centre line of tap-off outlets
(6) Protruding

Canalis KTC

Tap-off units for Compact NSX, fixed, front-connected circuit breakers, not equipped

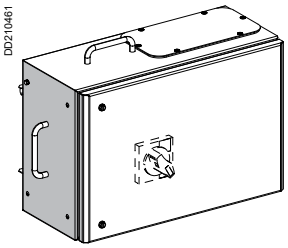

KSB●●●DC●

The cover of the tap-off unit may be opened or closed only when the circuit breaker is in the Off position.

System earthing arrangement	Busbar trunking	TT-TNS-TNC-IT (1)	TNC
	Tap-off unit	TT-TNS-TNS-IT (1)	TNC
Tap-off polarity		3L + N + PE (2)	3L + PEN
Tap-off diagram (e.g. circuit breaker protection)		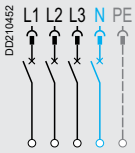	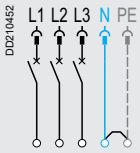

Rating (A)	Type of circuit breaker (Not Supplied)	Connection	Max. size (mm²) Flexible	Max. size (mm²) Rigid	Cable gland (3) (not supplied)	Cat. no.	Cat. no.	Weight (kg)
160(4)	NSX100 or NSX160 Rotary handle LV429338T	Terminals	50	70	ISO 25 max.	**KSB160DC4**	**KSB160DC5**	9.00
250(4)	NSX250 Rotary handle LV429338T	Terminals	70	150	ISO 32 max.	**KSB250DC4**	**KSB250DC5**	12.50
400(4)	NSX400 Rotary handle LV429338T	Terminals	150	240	ISO 40 max.	**KSB400DC4**	**KSB400DC5**	18.00

(1) The neutral must be protected or not distributed (3L + PE) for the IT system.
(2) Also suitable for tap-off unit 3L + PE (N not distributed, IT system also possible).
(3) Maximum diameter by unipolar cable.
4) IP55 Rating.

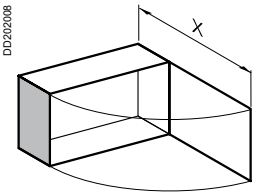

X = 625.5

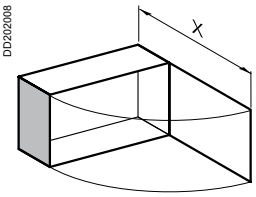

X = 726.5

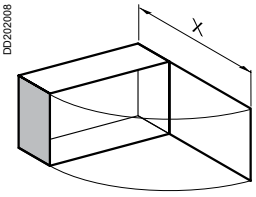

X = 976.5

KSB160DC●

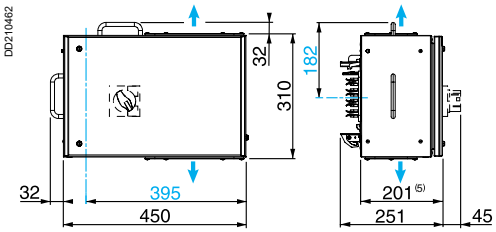

KSB250DC●

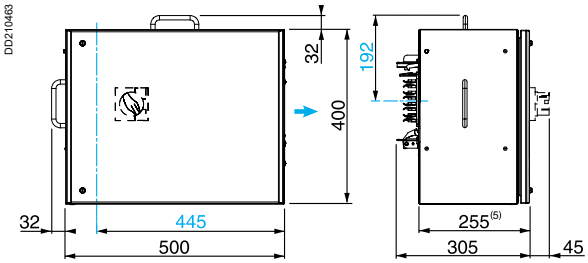

KSB400DC●

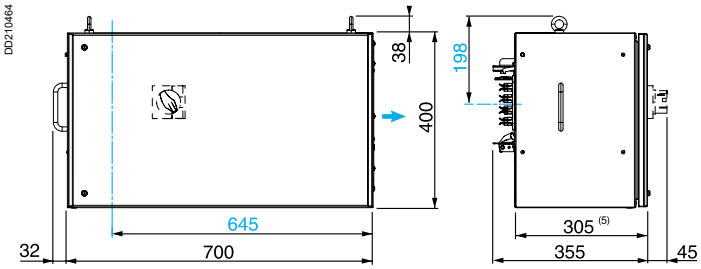

Cable exit
Centre line of tap-off outlets
(5) Protruding

Life Is On Schneider Electric

Plug-in tap-off units

For Compact NSX circuit breakers equipped with metering devices

Tap-off units for measurements and metering, not equipped

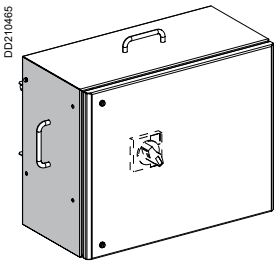

KSB●●●DC●TRE

The cover of the tap-off unit may be opened or closed only when the circuit breaker is in the Off position.

System earthing arrangement	Busbar trunking	TT-TNS-TNC-IT (1)	TNC
	Tap-off unit	TT-TNS-TNS-IT (1)	TNC
Tap-off outlets		3L + N + PE (2)	3L + PEN
Tap-off diagram (e.g. circuit breaker protection)		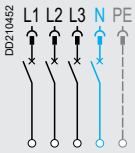	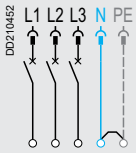

Rating (A)	Type of circuit breaker (Not supplied)	Connection	Max. size (mm²) Flexible	Max. size (mm²) Rigid	Cable gland (3) (not supplied)	Cat. no.	Cat. no.	Weight (kg)
250(4)	NSX250 Rotary handle LV429338T	Terminals	70	150	ISO 32 max.	**KSB250DC4TRE**	**KSB250DC5TRE**	13.50
400(4)	NSX400 Rotary handle LV432598T	Terminals	150	240	ISO 40 max.	**KSB400DC4TRE**	**KSB400DC5TRE**	19.50

(1) The neutral must be protected or not distributed (3L + PE) for the IT system.
(2) Also suitable for tap-off unit 3L + PE (N not distributed, IT system also possible).
(3) Maximum diameter by unipolar cable.
4) IP55 Rating.

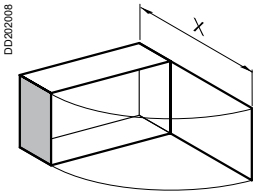

X = 726.5

KSB250DC●TRE

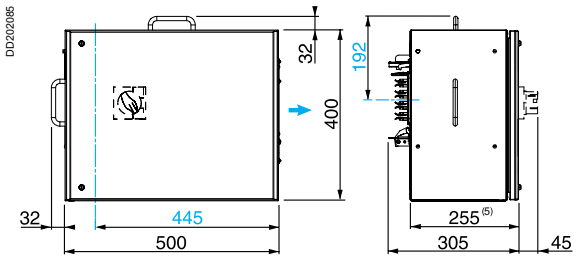

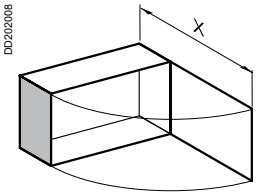

X = 976.5

KSB400DC●TRE

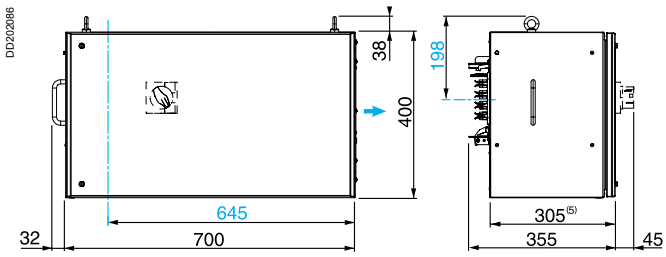

Cable exit
Centre line of tap-off outlets
(5) Protruding

Plug-in tap-off units (for Canalis KT Only)
For Compact NSX circuit breakers

Canalis KTC

DC - Tap-off units for Compact NSX, fixed, front-connected circuit breakers, not equipped

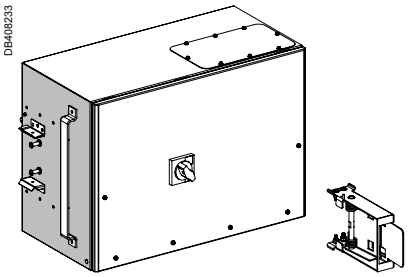

KTB0630DC●

Refer page 50, 51 for the installation of Tap off units on the KT ED outlet of different busway lengths.
The cover of the tap-off unit may be opened or closed only when the circuit breaker is in the Off position.

System earthing arrangement	Busbar trunking	TT-TNS-TNC-IT(1)	TNC
	Tap-off unit	TT-TNS-TNS-IT(1)	TNC
Tap-off polarity		3L + N + PE(2)	3L + PEN
Tap-off diagram (e.g. circuit breaker protection)		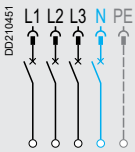	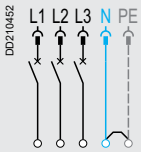

Rating (A)	Type of circuit breaker (Not Supplied)	Connection	Max. size (mm²) L or N / PE	Cable gland(3) (not supplied)	Cat. no.	Cat. no.	Weight (kg)
630(4)(6)(7)	NSX630 Rotary handle LV432598T	Terminals	2 x 300 / 1 x 150	ISO 70 max.	**KTB0630DC4**		45
		Terminals	2 x 300 / 1 x 150	ISO 70 max.		**KTB0630DC5**	46

(1) The neutral must be protected or not distributed (3L + PE) for the IT system.
(2) Also suitable for tap-off unit 3L + PE (N not distributed, IT system also possible).
(3) Maximum diameter by unipolar cable.
(4) De-rating coefficient to apply: 0.9.
(5) The auto clamping system is included in the reference and delivered in the box.
(6) To be installed on KT ED type distribution length only.
(7) IP55 Rating.
For an installation on Canalis KT delivered before 2016 contact our help desk for adaptation guidelines.

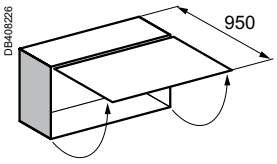

or

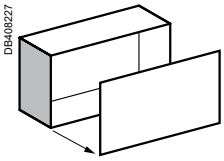

KTB0630DC●

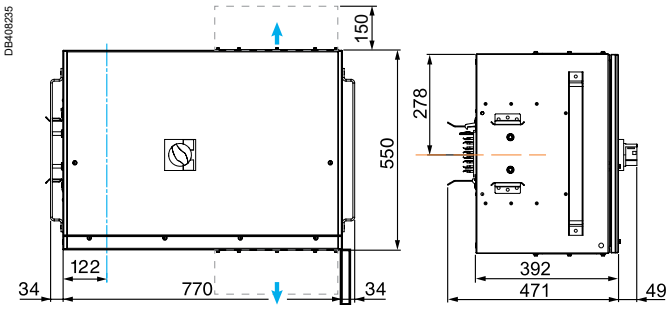

Cable exit
Center line of tap-off outlets
Axis of Canalis KT
Connection box to be fitted above or below

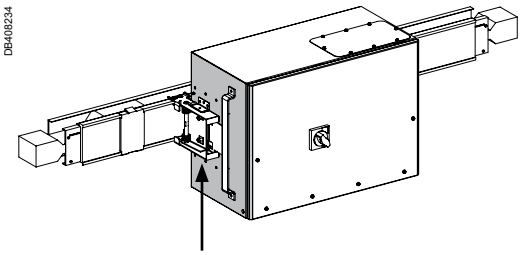

The auto clamping system has to be installed on the KT ED distribution units (5)

Option accessories	Cat. no.
Kit of connection bars	**KTB0630ZA01**
Connecting box	**KTB0630ZA04**

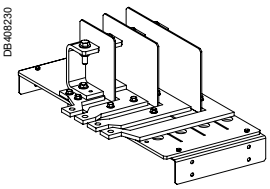

KTB0630ZA01

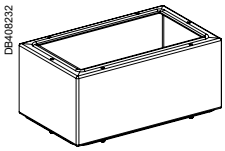

KTB0630ZA04

Plug-in tap-off units (for Canalis KT Only)

For NF fuses

Tap-off units with isolator for cylindrical fuses

Disconnection by opening the tap-off unit cover

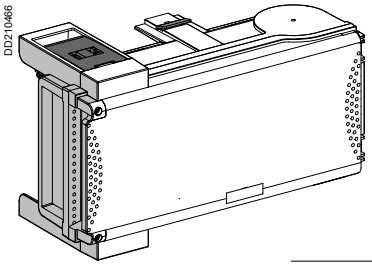

KSB●●●SF●

Tap-off unit disconnection by opening or closing the cover should be carried out only if the downstreamload is de-energised.

System earthing arrangement	Busbar trunking	TT-TNS-TNC-IT (1)	TNC
	Tap-off unit	TT-TNS-TNS-IT (1)	TNC
Tap-off polarity		3L + N + PE (2)	3L + PEN
Tap-off diagram (e.g. fuse protection)		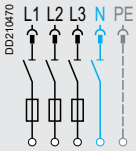	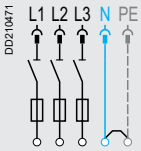

Rating (A)	For fuses (not supplied)	Connection	Max. size (mm²) Flexible	Max. size (mm²) Rigid	Cable gland (3) (not supplied)	Cat. no.	Cat. no.	Weight (kg)
50(4)	NF 14 x 51 Type gG: 50 A max. Type aM: 50 A max.	Terminals	25	25	ISO 50 max.	**KSB50SF4**	**KSB50SF5**	2.40
100(4)	NF 22 x 58 Type gG: 100 A max. Type aM: 100 A max.	Terminals	50	50	ISO 63 max.	**KSB100SF4**	**KSB100SF5**	5.00

(1) The neutral must be not distributed (3L + PE) for the IT system.
(2) Also suitable for tap-off unit 3L + PE (N not distributed, IT system also possible only if N not distributed).
(3) Maximum diameter for a multipolar cable.
(4) IP55 Rating.

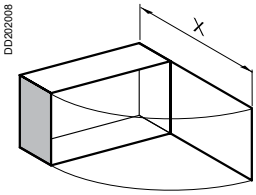

X = 432.5 (KSB50SF●)
X = 545.5 (KSB100SF●)

KSB50SF●, KSB100SF●

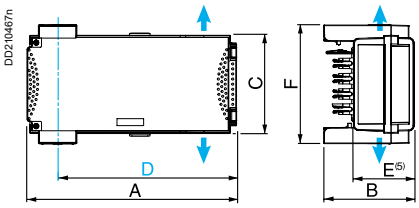

Cable exit
Centre line of tap-off outlets
(5) Protruding

Dimensions	Rating (A) 50	Rating (A) 100
A	356	444
B	153	178
C	167	202
D	309	397
E	103	128
F	202	220

Canalis KTC

Tap-off units with isolator for blade-type fuses
Disconnection by opening the tap-off unit cover

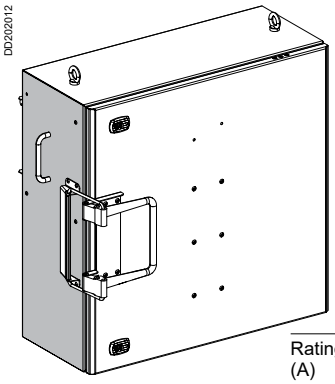

KSB400SE●

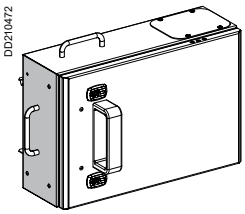

KSB160SE●
KSB250SE●

Tap-off unit disconnection by opening or closing the cover should be carried out only if the downstreamload is de-energised. It is possible to install an OF contact triggered by cover opening (see the "Accessories" section, page 122).

System earthing arrangement	Busbar trunking	TT-TNS-TNC-IT (1) TNC
	Tap-off unit	TT-TNS-TNS-IT (1) TNC
Tap-off polarity		3L + N + PE (2) / 3L + PEN
Tap-off diagram (e.g. fuse protection)		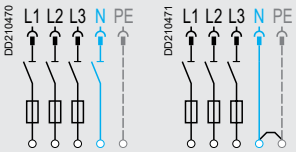

Rating (A)	For blade-type fuses (not supplied)	Connection	Max. size (mm²) Flexible	Max. size (mm²) Rigid	Cable gland (not supplied)	Cat. no.	Cat. no.	Weight (kg)
100(6)	Size 00 Type gG: 100 A max. Type aM: 100 A max.	Terminals	50	50	ISO 63 (3) max.	**KSB100SE4** (5)	**KSB100SE5** (5)	5.00
160(6)	Size 00 Type gG: 160 A max. Type aM: 160 A max.	Terminals	35	50	ISO 20 (4) max.	**KSB160SE4**	**KSB160SE5**	11.00
	Size 0 Type gG: 160 A max. Type aM: 160 A max.	Terminals	35	50	ISO 20 (4) max.	**KSB160SF4**	**KSB160SF5**	11.00
250(6)	Size 1 Type gG: 250 A max. Type aM: 250 A max.	Terminals	150	150	ISO 32 (4) max.	**KSB250SE4**	**KSB250SE5**	20.00
400(6)	Size 2 Type gG: 400 A max. Type aM: 400 A max.	Terminals	240	240	ISO 40 (4) max.	**KSB400SE4**	**KSB400SE5**	29.20

(1) The neutral must be not distributed (3L + PE) for the IT system.
(2) Also suitable for tap-off unit 3L + PE (N not distributed, IT system also possible only if N not distributed).
(3) Maximum diameter for a unipolar cable.
(4) Cable gland for multipolar cable only.
(5) For 100 A dimensions, see "Tap-off units with insulators for cylindrical fuses", page 115, catalogue number KSB100SF●.
(6) IP55 Rating.

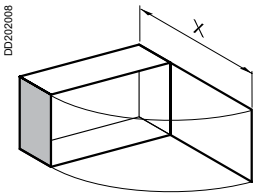

X = 577.5 (KSB160SE●)
X = 777 (KSB250SE●)

KSB160SE●, KSB250SE●

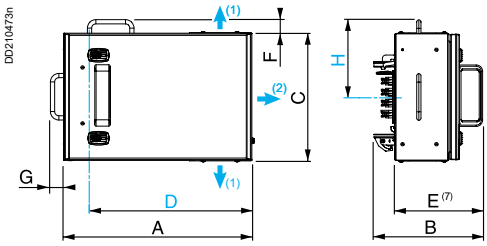

Dimensions	Rating (A) 160	Rating (A) 250
A	450	600
B	257	308
C	300	400
D	395	548
E	207	258
F	32	32
G	32	32
H	182	192

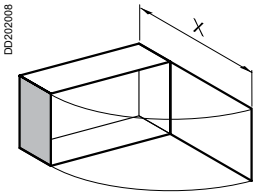

X = 855

KSB400SE●

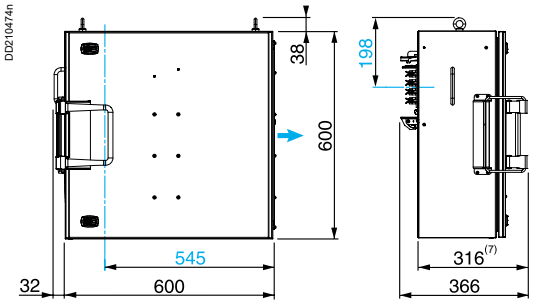

Cable exit: **(1)** exit of KSB160S●●, **(2)** exit of KSB250SE●
Centre line of tap-off outlets
(7) Protruding

Tap-off units with isolator for screw-type fuses
Disconnection by opening the tap-off unit covert

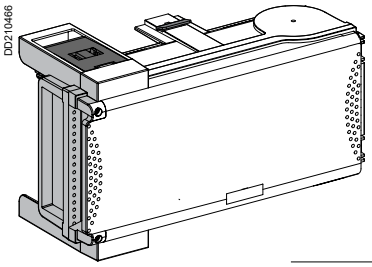

KSB●●S●●

Tap-off unit disconnection by opening or closing the cover should be carried out only if the downstreamload is de-energised.

System earthing arrangement	Busbar trunking	TT-TNS-TNC-IT [1]	TNC
	Tap-off unit	TT-TNS-TNS-IT [1]	TNC [2]
Tap-off polarity		3L + N + PE [2]	3L + PEN
Tap-off diagram (e.g. fuse protection)		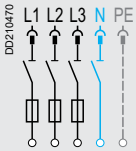	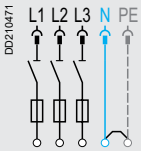

Rating (A)	For fuses (not supplied)	Connection	Max. size (mm²) Flexible	Max. size (mm²) Rigid	Cable gland [3] (not supplied)	Cat. no.	Cat. no.	Weight (kg)
25[4]	Diazed E27	Terminals	25	25	ISO 50 max.	**KSB25SD4**	**KSB25SD5**	2.40
50[4]	Néoezd E18	Terminals	25	25	ISO 50 max.	**KSB50SN4**	**KSB50SN5**	2.40
63[4]	Diazed E33	Terminals	25	25	ISO 63 max.	**KSB63SD4**	**KSB63SD5**	2.40

(1) The neutral must be not distributed (3L + PE) for the IT system.
(2) Also suitable for tap-off unit 3L + PE (N not distributed, IT system also possible only if N not distributed).
(3) Maximum diameter for a multipolar cable.
(4) IP55 Rating.

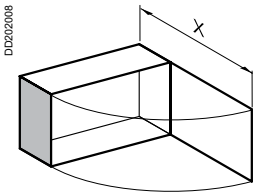

X = 432.5 (KSB25SD●, KSB50SN●)
X = 545.5 (KSB63SD●)

KSB●●S●●

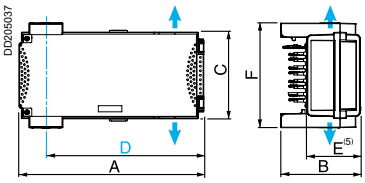

Cable exit
Centre line of tap-off outlets
(5) Protruding

Dimensions	Rating (A) 25 and 50	Rating (A) 63
A	356	444
B	153	178
C	167	202
D	309	397
E	103	198
F	202	220

Canalis KTC

Tap-off units with isolator for blade-type fuses
Disconnection by opening the tap-off unit cover

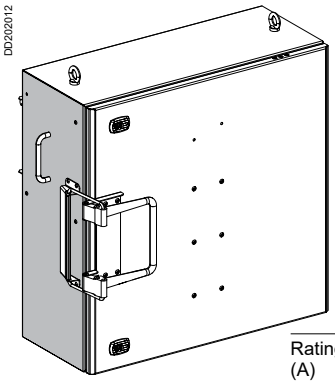

KSB400SE●

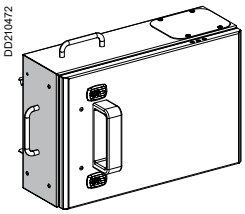

KSB160SE●
KSB250SE●

Tap-off unit disconnection by opening or closing the cover should be carried out only if the downstreamload is de-energised. It is possible to install an OF contact triggered by cover opening (see the "Accessories" section, page 122).

System earthing arrangement	Busbar trunking	TT-TNS-TNC-IT (1)	TNC
	Tap-off unit	TT-TNS-TNS-IT (1)	TNC
Tap-off polarity		3L + N + PE (2)	3L + PEN
Tap-off diagram (e.g. fuse protection)		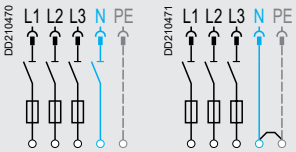	

Rating (A)	For blade-type fuses (not supplied)	Connection	Max. size (mm²) Flexible	Max. size (mm²) Rigid	Cable gland (not supplied)	Cat. no.	Cat. no.	Weight (kg)
100(6)	Size 00 Type gG: 100 A max. Type aM: 100 A max.	Terminals	50	50	ISO 63 (3) max.	**KSB100SE4** (5)	**KSB100SE5** (5)	5.00
160(6)	Size 00 Type gG: 160 A max. Type aM: 160 A max.	Terminals	35	50	ISO 20 (4) max.	**KSB160SE4**	**KSB160SE5**	11.00
250(6)	Size 1 Type gG: 250 A max. Type aM: 250 A max.	Terminals	150	150	ISO 32 (4) max.	**KSB250SE4**	**KSB250SE5**	20.00
400(6)	Size 2 Type gG: 400 A max. Type aM: 400 A max.	Terminals	240	240	ISO 40 (4) max.	**KSB400SE4**	**KSB400SE5**	29.20

(1) The neutral must be not distributed (3L + PE) for the IT system.
(2) Also suitable for tap-off unit 3L + PE (N not distributed, IT system also possible only if N not distributed).
(3) Maximum diameter for a unipolar cable.
(4) Cable gland for multipolar cable only.
(5) For 100 A dimensions, see "Tap-off units with insulators for cylindrical fuses", page 115, catalogue number KSB100SF●.
(6) IP55 Rating.

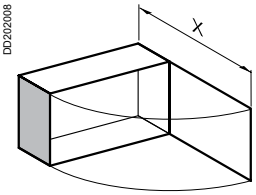

X = 577.5 (KSB160SE●)
X = 777 (KSB250SE●)

KSB160SE●, KSB250SE●

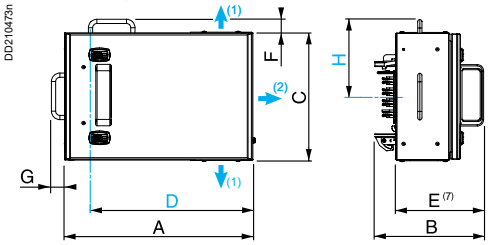

Dimensions	Rating (A) 160	Rating (A) 250
A	450	600
B	257	308
C	300	400
D	395	548
E	207	258
F	32	32
G	32	32
H	182	192

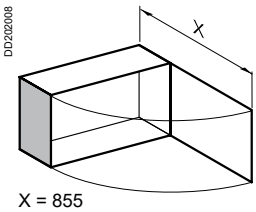

X = 855

KSB400SE●

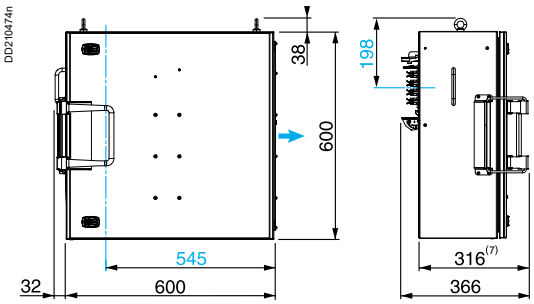

Cable exit: **(1)** exit of KSB160S●●, **(2)** exit of KSB250SE●
Centre line of tap-off outlets
(7) Protruding

SD - Tap-off units with switch-disconnector

DB408225

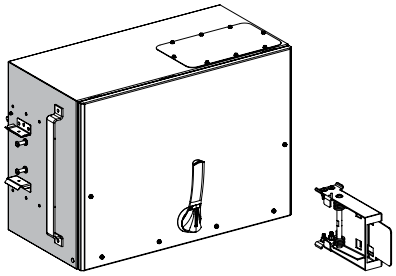

KTB0630SD●

Refer page 50, 51 for the installation of Tap off units on the KT ED outlet of different busway lengths.
The cover of the tap-off unit may be opened or closed only when the switch-disconnector is in the Off position.

System earthing arrangement	Busbar trunking	TT-TNS-TNC-IT[1]	TNC
	Tap-off unit	TT-TNS-TNS-IT[1]	TNC
Tap-off polarity		3L + N + PE[2]	3L + PEN
Tap-off diagram (e.g. fuse protection)		DD210470 L1 L2 L3 N PE	DD210471 L1 L2 L3 N PE

Rating (A)	Type of fuses	Connection	Max. size (mm²) L or N / PE	Cable gland[3] (not supplied)	Cat. no.	Cat. no.	Weight (kg)
630[4][6][7]	DIN size 3	Terminals	2 x 300 / 1 x 150	ISO 70 max.	**KTB0630SD4**		64
		Terminals	2 x 300 / 1 x 150	ISO 70 max.		**KTB0630SD5**	68

(1) The neutral must be protected or not distributed (3L + PE) for the IT system.
(2) Also suitable for tap-off unit 3L + PE (N not distributed, IT system also possible).
(3) Maximum diameter by unipolar cable.
(4) De-rating coefficient to apply: 0.87.
(5) The auto clamping system is included in the reference and delivered in the box.
(6) To be installed on KT ED type distribution length only.
(7) IP55 Rating.
For an installation on Canalis KT delivered before 2016 contact our help desk for adaptation guidelines.

DB408226

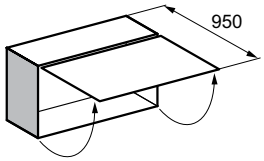

or

DB408227

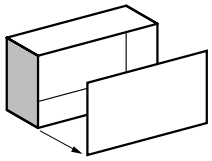

KTB0630SD●

DB408229

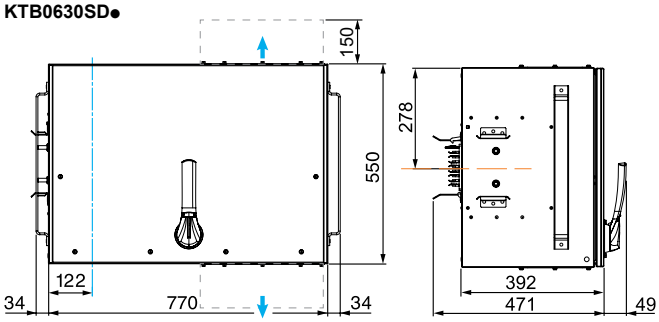

Cable exit
Center line of tap-off outlets
Axis of Canalis KT
Connection box to be fitted above or below

DB408228

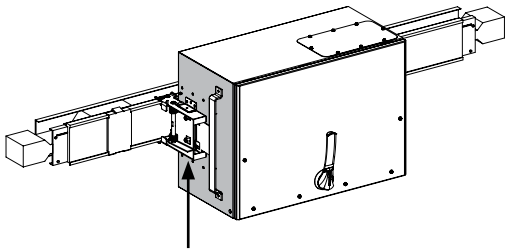

The auto clamping system has to be installed on the KT ED distribution units (5)

Option accessories	Cat. no.
Kit of connection bars	**KTB0630ZA02**
Extension rotary handle	**KTB0630ZA03**
Connecting box	**KTB0630ZA04**

DB408230

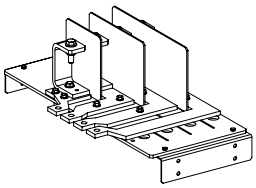

KTB0630ZA02

DB408231

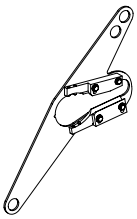

KTB0630ZA03

DB408232

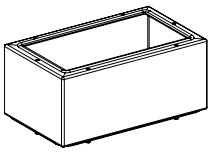

KTB0630ZA04

Canalis KTC

SE - Tap-off units with switch-disconnector internal arc tested IEC 61-641

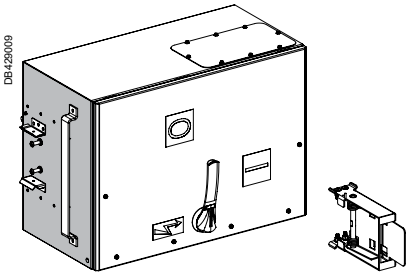

KTB0630SE●

Refer page 50, 51 for the installation of Tap off units on the KT ED outlet of different busway lengths.
The cover of the tap-off unit may be opened or closed only when the switch-disconnector is in the Off position.
To be installed on KT ED type distribution length only.

System earthing arrangement	Busbar trunking	TT-TNS-TNC-IT[1]	TNC
	Tap-off unit	TT-TNS-TNS-IT[1]	TNC
Tap-off polarity		3L + N + PE[2]	3L + PEN
Tap-off diagram (e.g. fuse protection)		DD230226 L1 L2 L3 N PE	DD230228 L1 L2 L3 N PE

Rating (A)	Type of fuses	Connection	Max. size (mm²) L or N / PE (kg)	Cable gland[3] (not supplied)	Cable exit side	Cat. no.	Cat. no.	Weight (kg)
630[4][6]	DIN size 3	Terminals	2 x 300 / 1 x 150	ISO 70 max.	Right	**KTB0630SE4R**		72
					Left	**KTB0630SE4L**		72
					Right		**KTB0630SE5R**	78
					Left		**KTB0630SE5L**	78

(1) The neutral must be protected or not distributed (3L + PE) for the IT system.
(2) Also suitable for tap-off unit 3L + PE (N not distributed, IT system also possible).
(3) Maximum diameter by unipolar cable.
(4) De-rating coefficient to apply: 0.87.
(5) The auto clamping system and the kit of connection bars are included in the reference and delivered in the box.
(6) IP55 Rating.
For an installation on Canalis KT delivered before 2016 contact our help desk for adaptation guidelines.

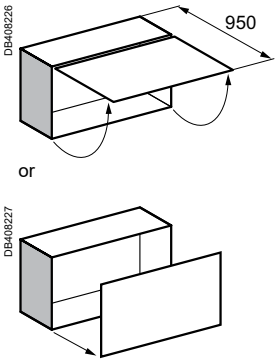

KTB0630SE●

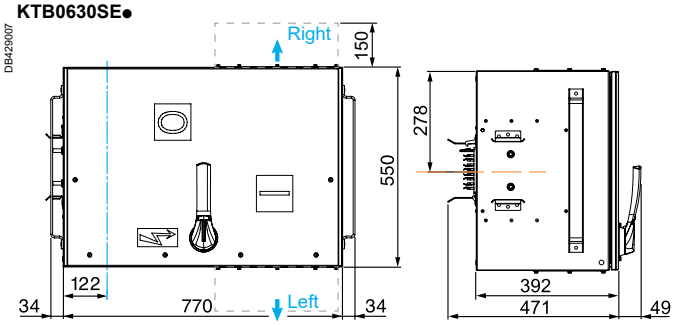

Cable exit
Center line of tap-off outlets
Axis of Canalis KT
Connection box to be fitted above or below

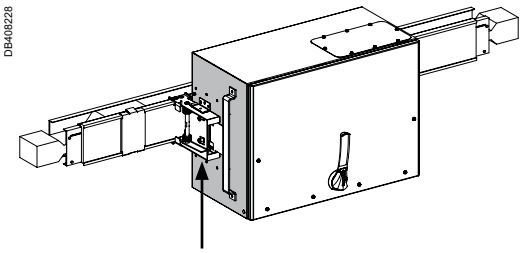

The auto clamping system has to be installed on the KT ED distribution units (5)

Option accessories	Cat. no.
Extension rotary handle	**KTB0630ZA03**
Connecting box	**KTB0630ZA04**
Plate with 5 cable glands 24 to 40 mm	**KTB0000GP01**
Plate with 1 cable clamp 30 to 70 mm	**KTB0000GP02**
Plate with 2 cable clamps 30 to 70 mm	**KTB0000GP03**

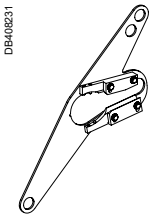

KTB0630ZA03

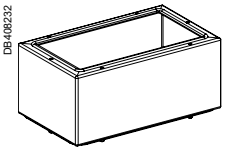

KTB0630ZA04

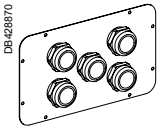

KTB0000GP01

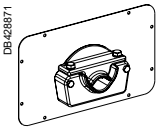

KTB0000GP02

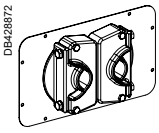

KTB0000GP03

Tap-off units for screw-mounted fuses
Disconnection by unplugging the tap-off unit

DD202013

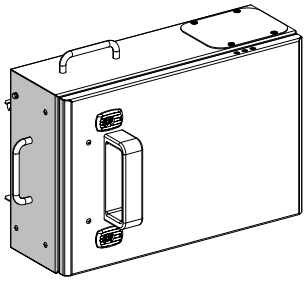

KSB160SG4

DD202014

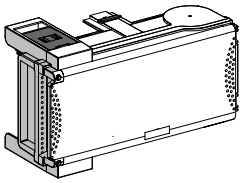

KSB●●SG4

Tap-off unit disconnection by opening or closing the cover should be carried out only if the downstreamload is de-energised.

System earthing arrangement	Busbar trunking	TT-TNS-TNC-IT (1)
	Tap-off unit	TT-TNS-TNS-IT (1)
Tap-off polarity		3L + N + PE (2)
Tap-off diagram (e.g. fuse protection)		DD210470 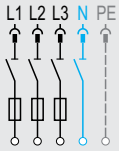

Rating (A)	For fuses (not supplied)	Connection	Max. size (mm²) Flexible	Max. size (mm²) Rigid	Cable gland (not supplied)	Cat. no.	Weight (kg)
32(5)	BS88 A1	Terminals	25	25	ISO 50 (3) maxi.	**KSB32SG4**	2.40
80(5)	BS88 A1 or A3	Terminals	35	50	ISO 63 or ISO 20 (3) maxi.	**KSB80SG4**	5.00
160(5)	BS88 B1 or B2	Terminals	35	50	ISO 20 (4) maxi.	**KSB160SG4**	11.00

(1) The neutral must be not distributed (3L + PE) for the IT system.
(2) Also suitable for tap-off unit 3L + PE (N not distributed).
(3) Maximum diameter for a multipolar cable.
(4) Maximum diameter for a unipolar cable.
(5) IP55 Rating.

DD202008

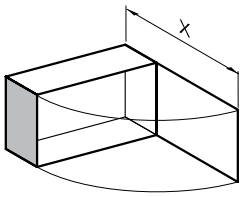

X = 432.5 (KSB32SG4)
X = 545.5 (KSB80SG4)

KSB32SG4, KSB80SG4

DD202267n

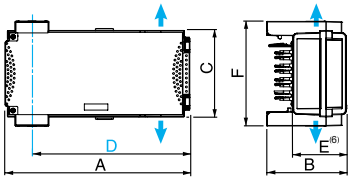

Dimensions	Rating (A) 32	Rating (A) 80
A	356	444
B	153	178
C	167	202
D	309	397
E	103	128
F	202	220

DD202008

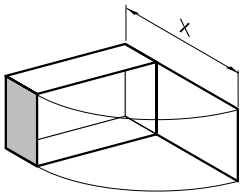

X = 577.5

KSB160SG4

DD202015n

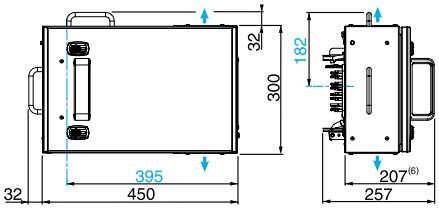

Cable exit
Centre line of tap-off outlets
(6) Protruding

Accessories for tap-off units from Canalis KS range
IP55

Canalis KTC

Accessories for all tap-off units for modular devices

Designation	Description	Cat. no.	Weight (kg)
Modular blanking plate	Divisible set of 10 x 5	**13940**	0.08
Adhesive label (1)	Set of 12 label-holders (H = 24 mm, W = 180 mm)	**LVS08905**	-
	Set of 12 labels (H = 24 mm, W = 432 mm)	**LVS08903**	-
	Set of 12 divisible labels (H = 24 mm, W = 650 mm)	**LVS08907**	-

(1) Self-adhesive support complete with transparent cover and paper label.

Accessories for all sheet-metal tap-off units

Designation	For tap-off unit	Order in multiples of	Cat. no.	Weight (kg)
Cover contact (break before opening)	KSB100S● to KSB400S●	1	**KSB400ZC1**	0.03

CB - Bolted tap-off units for Compact NSX/NS with front connections[1]

		Tap-off polarity		3L + PE	3L + N + PE 3L + N + PER	3L + PEN	
		Tap-off diagram (e.g. circuit breaker protection)		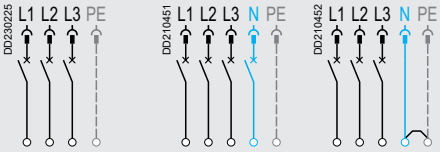			
Rating (A)	Type of circuit breaker[2]	Max. connection capacity (mm²)		Cat. no.			Weight (kg)
		Phases and neutral	PE				
400[5] to 630[5]	NSX400 or NSX630[3] Rotary handle LV432598	3 x 300	150	**KTB0630CB3**	**KTB0630CB4**	**KTB0630CB5**	35.00
800[5] to 1000[5]	NSX800 or NSX1000[4] Rotary handle 33878	4 x 300	200	**KTB1000CB3**	**KTB1000CB4**	**KTB1000CB5**	45.00
1250[6]	NSX1250 Rotary handle 33878	4 x 300	240	**KTB1250CB3**	**KTB1250CB4**	**KTB1250CB5**	50.00

(1) Installation KTC●●●●EB●●● bolted section only.
(2) Circuit breaker and rotary handle not supplied.
(3) De-rating cœfficient to apply on NSX630A: 0.94.
(4) It is recommended a derating factor of 0.93 be applied when using a Compact NS1000 **type L** circuit breaker.
(5) IP54 only.
(6) IP31 only.

DD202451

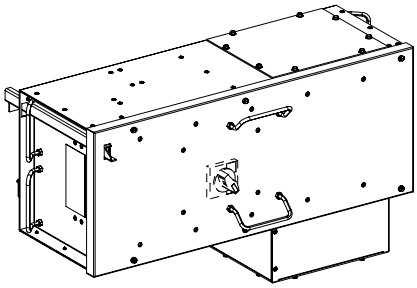

KTB0630CB●

DD202497

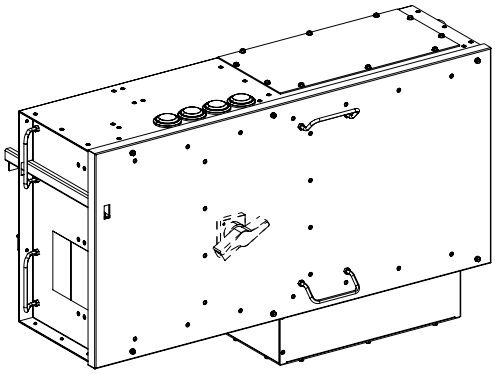

KTB1000CB●

DD230206

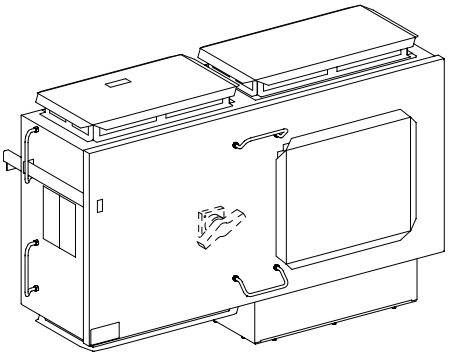

KTB1250CB●

DD210880

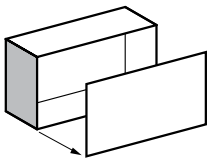

KTB●●●●CB● from 400 to 1000 A

DD210462

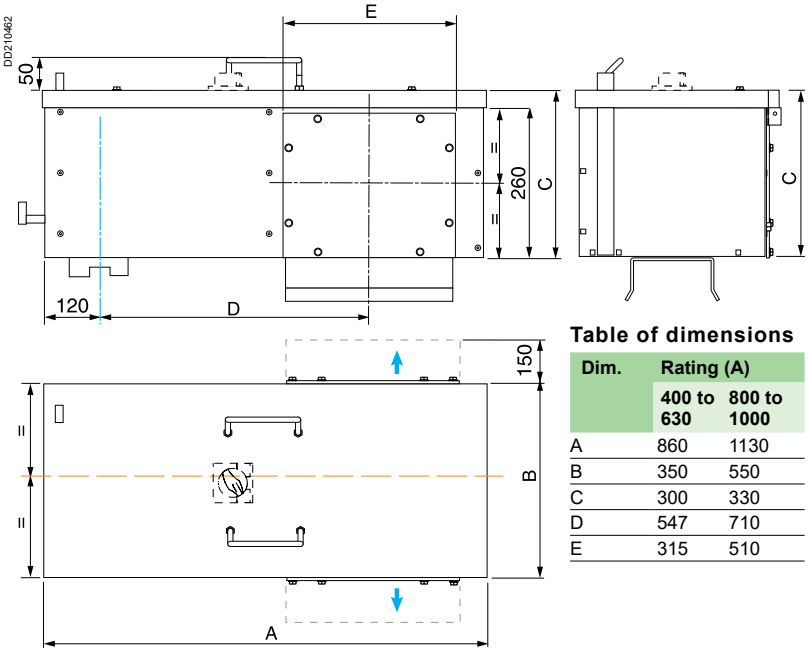

Table of dimensions

Dim.	Rating (A)	
	400 to 630	800 to 1000
A	860	1130
B	350	550
C	300	330
D	547	710
E	315	510

From 1250 A

DD230207

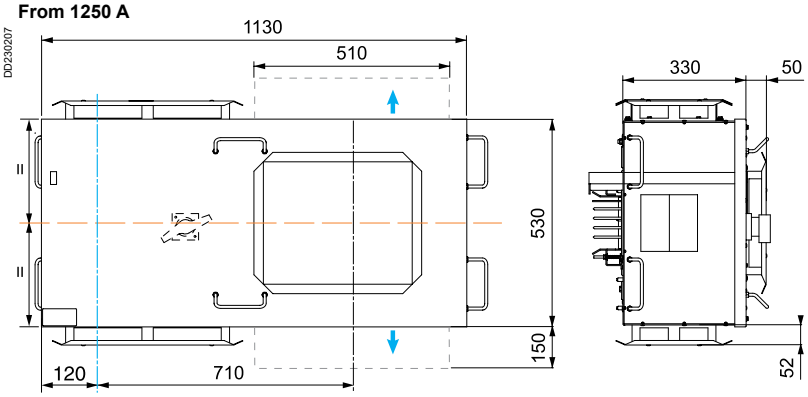

Cable exit
Center line of tap-off outlets
Axis of Canalis KT
Connection box to be fitted above or below

Canalis KTC

HF - Bolted tap-off units with switch-disconnectors [1]

		Tap-off polarity		3L + PE	3L + N + PE 3L + N + PER	3L + PEN	
		Tap-off diagram (e.g. circuit breaker protection)		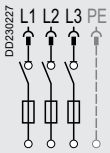	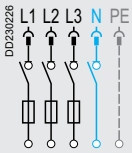	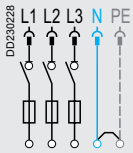	
Rating (A)	DIN fuse size (not supplied) [2]	Max. connection capacity (mm^2)		Cat. no.			Weight (kg)
		Phases and neutral	PE				
630[3][5]	T3	3 x 300	150	**KTB0630HF3**	**KTB0630HF4**	**KTB0630HF5**	54.00
1000[3][4][5]	T4	4 x 300	200	**KTB1000HF3**	**KTB1000HF4**	**KTB1000HF5**	96.00

(1) Installation KTC●●●●EB●●● bolted section only.
(2) Switch-disconnectors and rotary handle **supplied**.
(3) Derating coefficient to apply: 0.8.
(4) KTB1000HF● cannot be installed on EB straight lengths.
(5) IP31 Rating.

DD230200

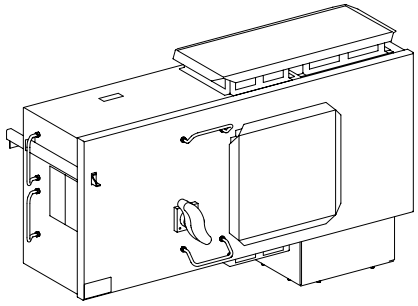

KTB0630HF●

KTB●●●●HF●

DD230223

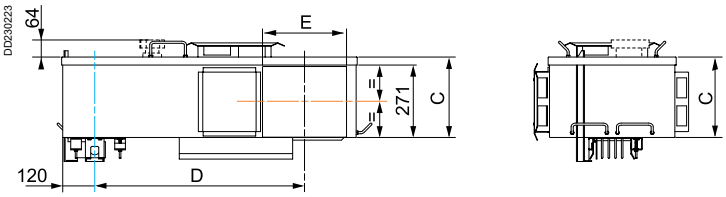

DD230203

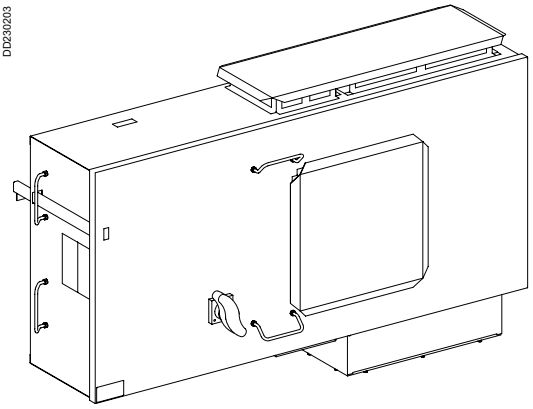

KTB1000HF●

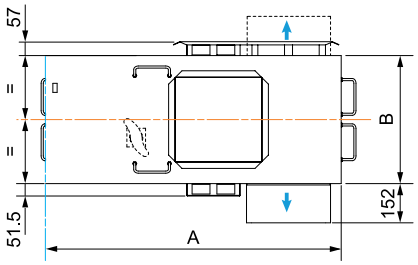

DD210880

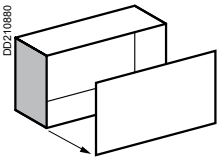

Table of dimensions

Dim.	Rating (A)	
	630	1000
A	1108	1438
B	480	690
C	300	330
D	786.5	1010
E	315	510

- Cable exit
- Center line of tap-off outlets
- Axis of Canalis KT
- Connection box to be fitted above or below

Coupling isolators from 1000 to 2500 A

SL - Compact NS type NA coupling isolators

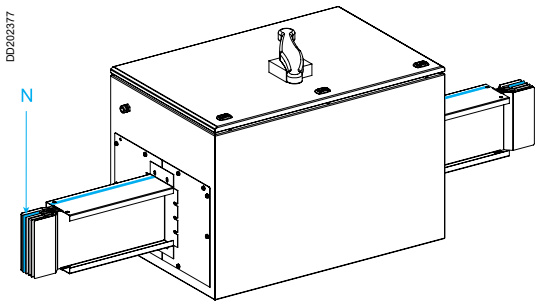

Fits equally on ducting in a flat position, on the edge (door accessible from above or below) or vertically.
Tap-off unit door locking is achieved using a door key lock.

Rating (A)	Type of isolator (supplied)	Cat. no.			Weight (kg)
		3L + PE	3L + N + PE	3L + N + PER[3]	
1000[4]	NS1000 NA	**KTC1000SL31**	**KTC1000SL41**	**KTC1000SL51**	150.00
1350[1][4]	NS1250 NA	**KTC1350SL31**	**KTC1350SL41**	**KTC1350SL51**	165.00
1600[4]	NS1600 NA	**KTC1600SL31**	**KTC1600SL41**	**KTC1600SL51**	180.00

KTC●●●●SL●1

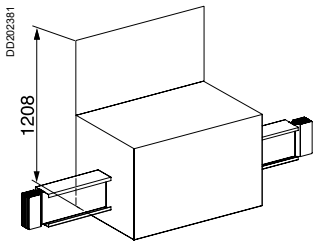

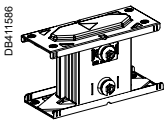

KTC●●●●SL●1

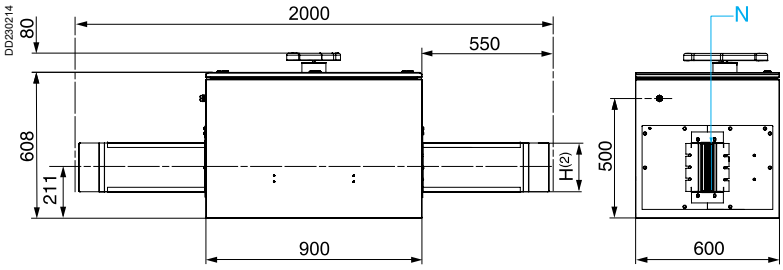

(1) Rated current: 1250 A.
(2) See the "Trunking cross-section" table below.
(3) To order the 3L + N + PER version with reinforced Isc, replace KTC●●●●SL51 by KTC●●●●SL71.
(4) IP55 Rating.

SL - Interpact INV coupling isolators

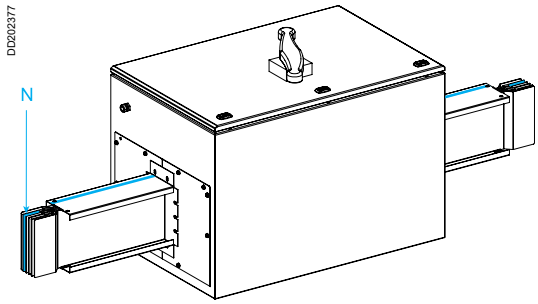

Fits equally on ducting in a flat position, on the edge (door accessible from above or below) or vertically.
Tap-off unit door locking is achieved using a door key lock.

Rating (A)	Type of isolator (supplied)	Cat. no.			Weight (kg)
		3L + PE	3L + N + PE	3L + N + PER	
2000[2]	INV2000	**KTC2000SL31**	**KTC2000SL41**	**KTC2000SL51**	200.00
2500[2]	INV2500	**KTC2500SL31**	**KTC2500SL41**	**KTC2500SL51**	210.00

KTC●●●●SL●1

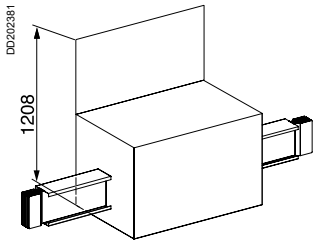

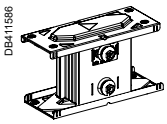

KTC●●●●SL●1

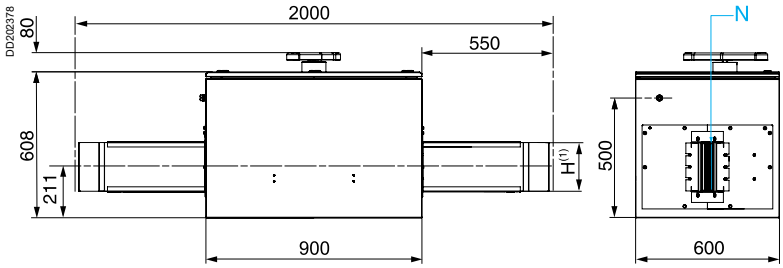

(1) See the "Trunking cross-section" table below.
(2) IP55 Rating.

Trunking cross-section

Rating (A)	1000	1350	1600	2000	2500	3200	4000	5000	6300
Height H (mm)	74	104	124	164	204	244	324	404	244 / 130 / 244
Width W (mm)	140	140	140	140	140	140	140	140	140

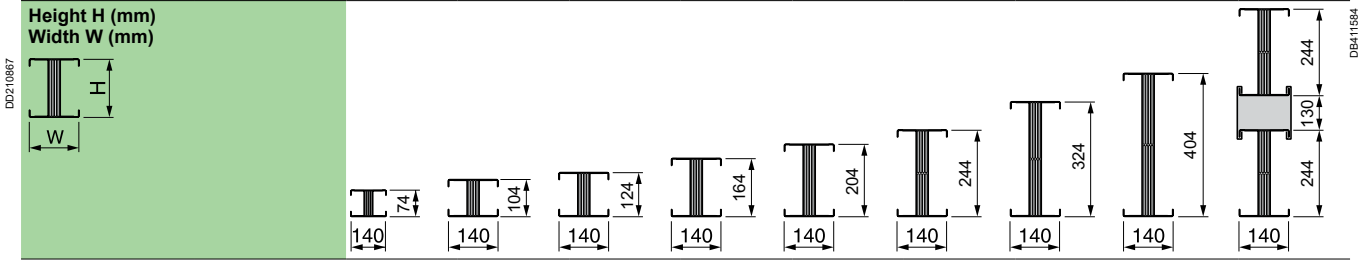

Canalis KTC

SL - Masterpact NW coupling isolators

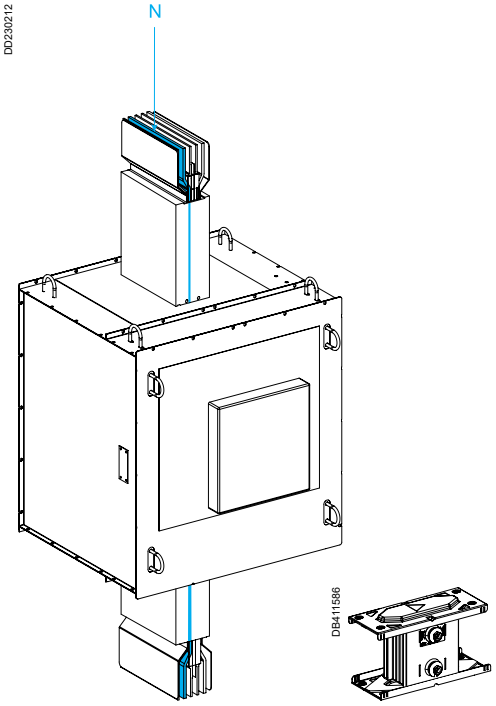

KTC3200SL●1

Notice: If the coupling isolator is installed on a **horizontal** busbar trunking the device must be only used as a disconnector and without any accessories (MX, XF, Motor MCH...).

Rating (A)	Type of isolator (supplied)	Cat. no.			Weight (kg)
		3L + PE	3L + N + PE	3L + N + PER(1)	
3000(2)(3)	NW3200 HA	**KTC3200SL31**	**KTC3200SL41**	**KTC3200SL51**	360.00

(1) To order the 3L + N +PER version with reinforced Isc, replace KTC●●●●SL51 by KTC●●●●SL71.
(2) The use of this coupling isolator requires derating the busway run to 3000 A.
(3) IP55 Rating.

KTC3200SL●1

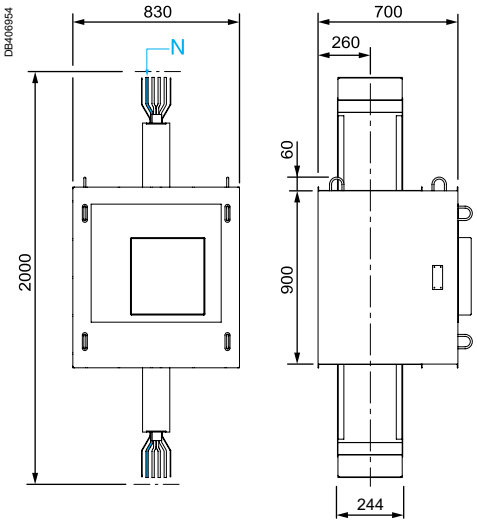

Protection of the run using Compact NS circuit breakers from 1000 à 1600 A

PL - Protection of the run using Compact NS circuit breakers

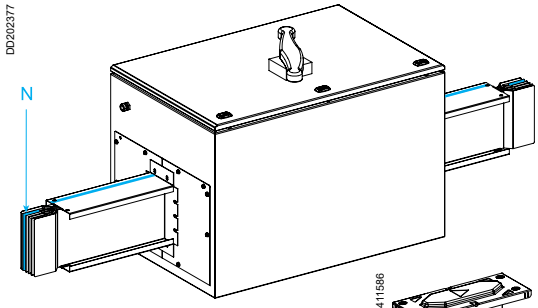

KTC●●●●PL●1

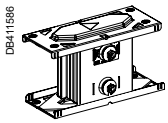

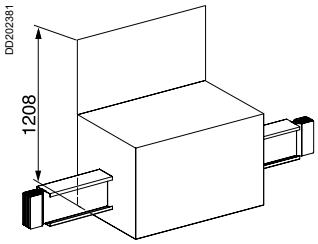

Fits equally on ducting in a flat position, on the edge or vertically.
Tap-off unit door locking is achieved using a door key lock.

Rating (A)	Type of isolator(3) (supplied)	Cat. no. 3L + PE	3L + N + PE	3L + N + PER(4)	Weight (kg)
1000(5)	NS1000 N	**KTC1000PL31**	**KTC1000PL41**	**KTC1000PL51**	150.00
1350(1)(5)	NS1250 N	**KTC1350PL31**	**KTC1350PL41**	**KTC1350PL51**	165.00
1600(5)	NS1600 N	**KTC1600PL31**	**KTC1600PL41**	**KTC1600PL51**	180.00

KTC●●●●PL●1

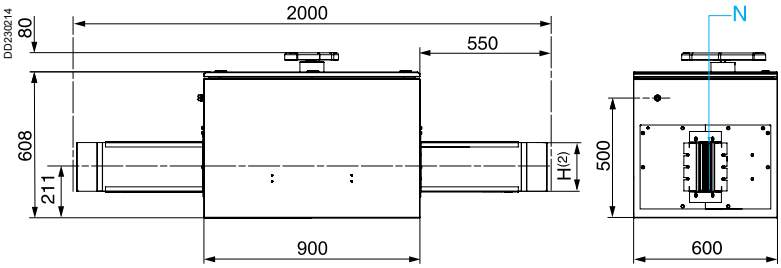

(1) Rated current: 1250 A.
(2) See the "Trunking cross-section" table below.
(3) Manual fixed compact NS circuit breakers type N equipped with a Micrologic 2.0 control unit.
(4) To order the 3L + N + PER version with reinforced Isc, replace KTC●●●●PL51 by KTC●●●●PL71.
(5) IP55 Rating.

Protection of a run > 1600 A

To install protection of a run > 1600 A, consult your sales office.

Trunking cross-section

Rating (A)	1000	1350	1600	2000	2500	3200	4000	5000	6300
Height H (mm)	74	104	124	164	204	244	324	404	244 / 130 / 244
Width W (mm)	140	140	140	140	140	140	140	140	140

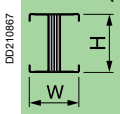

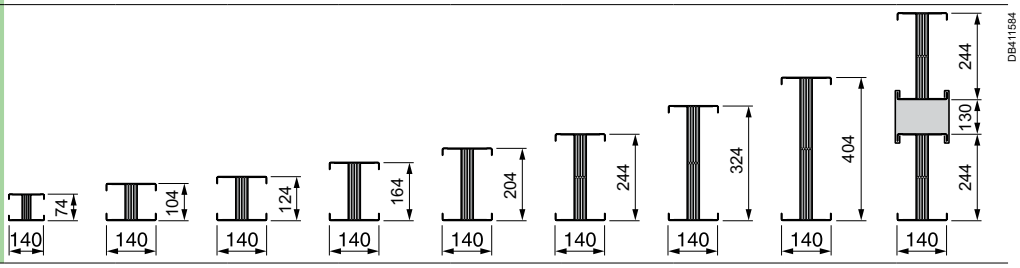

Canalis KTC

For further information about the use and the dimensions, consult your sales office.

Double skin aluminium enclosure

DD210884

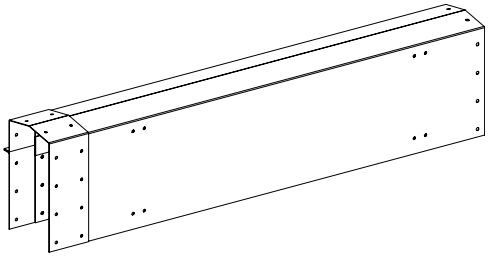

For outdoor applications.

DD205943-G

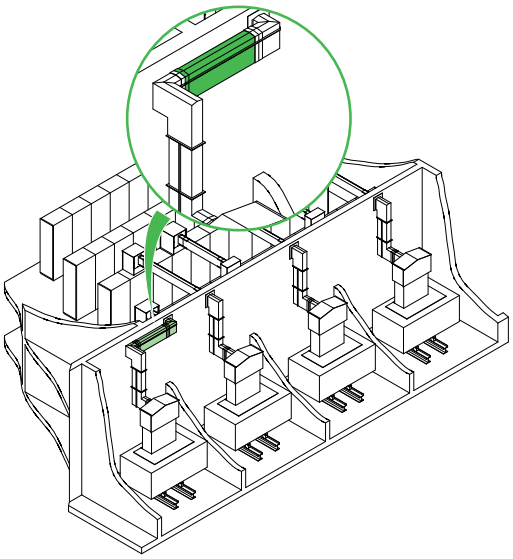

Reduction sections

DD210883

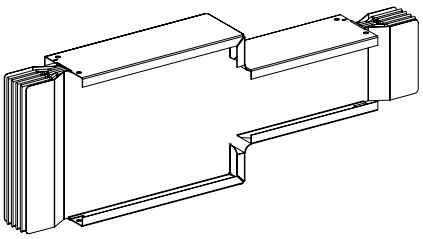

DB411586

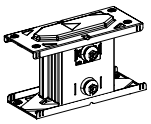

NOTE: Bigger rating Junction Block is supplied.

For reducing busbar trunking ratings.
Note: must be used in conjunction with appropriate protection.

Table of sizes

H_A	H_B							
	74	104	124	164	204	244	324	404
74								
104								
124								
164								
204								
244								
324								
404								

Available.

DD230234

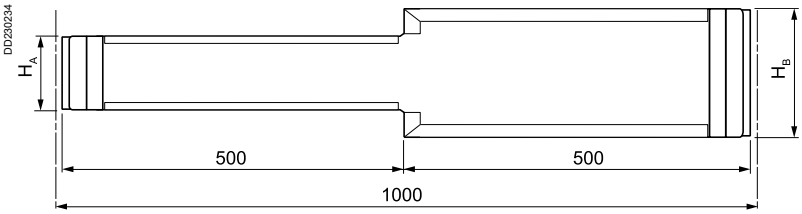

Edgewise elbow with made to measure angles

DD210817

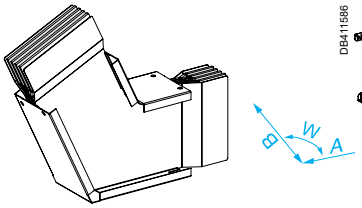

DB411586

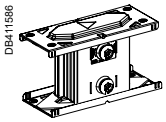

4-limb zed unit

DD210885

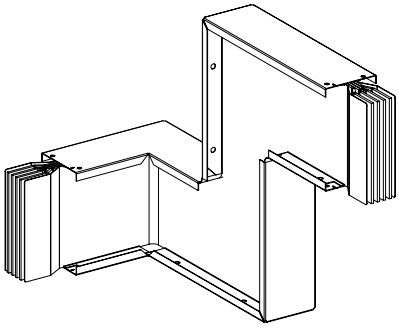

DB411586

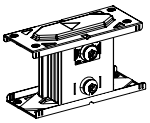

Edgewise/flat elbow feed unit

DD210881

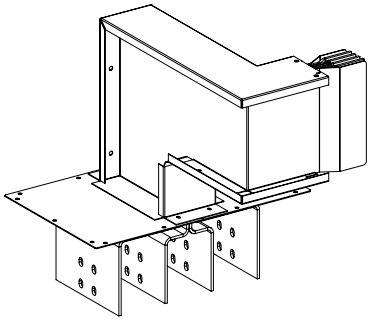

On demand

- Surface treatment on conductors for corrosive atmospheres.
- Special colours.
- Seaworthy packaging.
- etc.

Canalis KH substitution by Canalis KT
KTC/KGF connection elements

Canalis KTC or KGF

HT - Connection elements

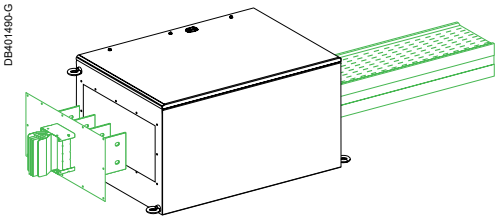

KTB0●●●HT0

Ratings	Cat. no.			
	3L + PE	3L + N + PE	3L + N + PER	Weight (kg)
See the table below	KTB0350HT01	KTB0350HT01	KTB0350HT01	63.00
	KTB0350HT02	KTB0350HT02	KTB0350HT02	80.00
	KTB0510HT01	KTB0510HT01	KTB0510HT01	88.00
	KTB0510HT02	KTB0510HT02	KTB0510HT02	127.00
	KTB0510HT03	KTB0510HT03	KTB0510HT03	137.00

End feed units (J, K, M = 115) are not included in the reference and must be ordered separately.

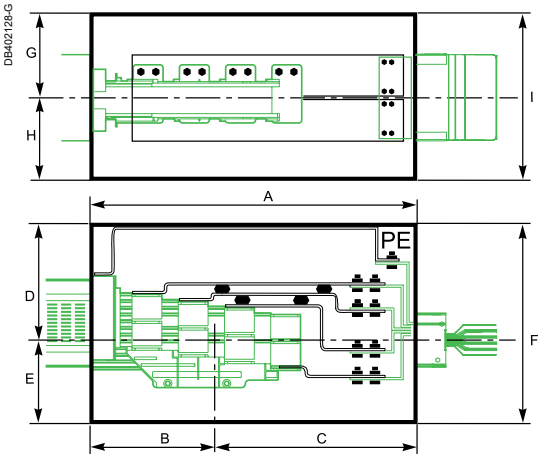

Table of dimensions

	A	B	C	D	E	F	G	H	I
KTB0350HT01	850	331.5	518.5	300	300	600	258	208	466
KTB0350HT02	850	331.5	518.5	300	300	600	258	208	466
KTB0510HT01	890	310	580	300	300	600	329	306	635
KTB0510HT02	890	310	580	300	300	600	329	306	635
KTB0510HT03	890	310	580	300	300	600	329	306	635

KGF type	Rating	L busway	KT type	Rating	H busway	H flange	Connection ref.
KGF16	1600	166	**KTC1600**	1600	124	230	**KTB0350HT01**
KGF26	2750	238	**KTC3200**	3200	244	350	**KTB0350HT02**
KGF36	3750	310	**KTC4000**	4000	324	510	**KTB0510HT01**
KGF46	5000	382	**KTC5000**	5000	404	510	**KTB0510HT02**
KGF56	5000	454		Line extension with KT is not possible			

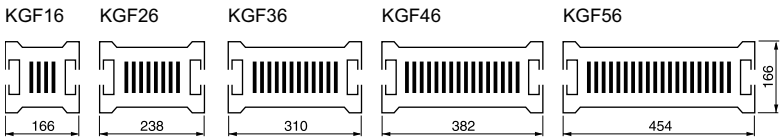

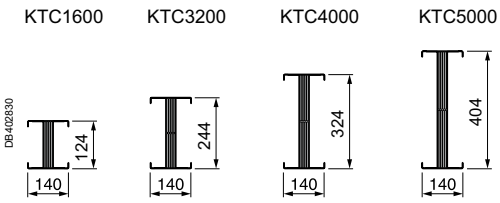

KGF Polarity	KTC Polarity
3L + PE	3L + PE
3L + 1/2N + PE	3L + N + PE
3L + N + PE	3L + N + PE
3L + N + PER (1)	3L + N + PER

DB402831

(1) Version with 120 mm² cu conductor or entire conductor.

Canalis KH substitution by Canalis KT

Preserved KH tap-off units and substitution table

Plug-in tap-off units

Protection type	Polarity	Rating	Catalogue number	Status	Substitued by
Isolator and fuse carriers	3L + PE	160	KH016SD13	Removed	KHB0250SE5
		250	KH025SD13	Removed	KHB0250SE5
		400	KH040SD13	Removed	KHB0630SE5R or KHB0630SE5L
		630	KH063SD13	Removed	KHB0630SE5R or KHB0630SE5L
	3L + N + PE	160	KH016SD14	Removed	KHB0250SE4
		250	KH025SD14	**Removed**	KHB0250SE4
		400	KH040SD14	Removed	KHB0630SE4R or KHB0630SE4L
		630	KH063SD14	**Removed**	KHB0630SE4R or KHB0630SE4L
	3L + PEN	160	KH016SD15	Removed	KHB0250SE5
		250	KH025SD15	**Removed**	KHB0250SE5
		400	KH040SD15	Removed	KHB0630SE5R or KHB0630SE5L
		630	KH063SD15	**Removed**	KHB0630SE5R or KHB0630SE5L
			KH063SD1530758	Removed	KHB0630SE5R or KHB0630SE5L
	3L + NP + PE	160	KH016SD24	Removed	No
		250	KH025SD24	Removed	No
		400	KH040SD24	Removed	No
		630	KH063SD24	Removed	No
Switch and fuse carriers	3L + PE	200	KH020SD33	Removed	KHB0250SE5
		315	KH031SD33	Removed	KHB0630SE5R or KHB0630SE5L
		500	KH050SD33	Removed	KHB0630SE5R or KHB0630SE5L
	3L + N + PE	50	KH005SD34	Removed	KHB0250SE4
		100	KH010SD34	Removed	KHB0250SE4
		200	KH020SD34	Removed	KHB0250SE4
		250	KH025SE341	**Removed**	KHB0250SE4
		315	KH031SD34	Removed	KHB0630SE4R or KHB0630SE4L
		400	KH040SE341	**Removed**	KHB0630SE4R or KHB0630SE4L
		500	KH050SD34	Removed	KHB0630SE4R or KHB0630SE4L
		630	KH063SE341	**Removed**	KHB0630SE4R or KHB0630SE4L
	3L + PEN	50	KH005SD35	Removed	KHB0250SE5
		100	KH010SD35	Removed	KHB0250SE5
		200	KH020SD35	Removed	KHB0250SE5
		250	KH025SE351	**Removed**	KHB0250SE5
		315	KH031SD35	Removed	KHB0630SE5R or KHB0630SE5L
		400	KH040SE351	**Removed**	KHB0630SE5R or KHB0630SE5L
		500	KH050SD35	Removed	KHB0630SE5R or KHB0630SE5L
		630	KH063SE351	**Removed**	KHB0630SE5R or KHB0630SE5L
	3L + NP + PE	200	KH020SD44	Removed	No
		315	KH031SD44	Removed	No
		500	KH050SD44	Removed	No
Circuit breaker manuel	3L + N + PE	160	KH016SD541	Removed	KH025SD541
		250	KH025SD541	Preserved	-
		400	KH040SD541	Removed	KH063SD541
		630	KH063SD541	Preserved	-
	3L + PEN	160	KH016SD551	Removed	KH025SD551
		250	KH025SD551	Preserved	-
		400	KH040SD551	Removed	KH063SD551
		630	KH063SD551	Preserved	-
Circuit breaker electrical control	3L + N + PE	160	KH016SD542	Removed	No
		250	KH025SD542	**Removed**	No
		400	KH040SD542	Removed	No
		630	KH063SD542	**Removed**	No
	3L + PEN	160	KH016SD552	Removed	No
		250	KH025SD552	**Removed**	No
		400	KH040SD552	Removed	No
		630	KH063SD552	**Preserved**	No
Muller Isolator	3L + N + PE	630	KH063SD841	Removed	No
	3L + PEN	100	KH010SD85	**Removed**	KHB0250SE5
		250	KH025SD85	**Removed**	KHB0250SE5
		400	KH040SD85	**Removed**	KHB0630SE5R or KHB0630SE5L
		630	KH063SD85	**Removed**	KHB0630SE5R or KHB0630SE5L
			KH063SD8502	Removed	KHB0630SE5R or KHB0630SE5L
Muller Isolator + Pelha	3L + PEN	400	KH040SD9502	Preserved	-
		630	KH063SD9502	Preserved	-
Dumeco switch	-	-	KH0SD108919802	Removed	No
			KH0SD108919803	Removed	No
			KH0SD108920002	Removed	No
			KH0SD108922201	Removed	No
			KH0SD108922202	Removed	No
Other	3L + N + PE	100	KH0SD107080401	Removed	No
		60	KH0SD107076901	Removed	No
	3L + PEN	100	KH0SD107080402	Removed	No
	-	60	KH0SD107076902	Removed	No
		400	KH0SD1530710	Removed	No

Canalis KH substitution by Canalis KT

Preserved KH tap-off units and substitution table

Canalis KTC

Bolted tap-off units

Protection	Polarity	Rating	Catalogue number	Status	Substitued by
Isolator and fuse carriers	3L + PE	160	KH016SB131	Removed	No
			KH016SB132	Removed	No
		250	KH025SB131	**Removed**	No
			KH025SB132	**Removed**	No
		400	KH040SB131	Removed	No
			KH040SB132	Removed	No
		630	KH063SB131	**Removed**	No
			KH063SB132	**Removed**	No
		1000	KH086SB131	**Removed**	No
			KH086SB132	**Removed**	No
			KH0SB331132	Removed	No
	3L + N + PE	160	KH016SB141	Removed	No
			KH016SB142	Removed	No
		250	KH025SB141	**Removed**	No
			KH025SB142	**Removed**	No
		400	KH040SB141	Removed	No
			KH040SB142	Removed	No
		630	KH063SB141	**Removed**	No
			KH063SB142	**Removed**	No
		1000	KH086SB141	**Removed**	No
			KH086SB142	**Removed**	No
	3L + PEN	160	KH016SB151	Removed	No
			KH016SB152	Removed	No
		250	KH025SB151	Removed	No
			KH025SB152	Removed	No
		400	KH040SB151	Removed	No
			KH040SB152	Removed	No
		630	KH063SB151	Removed	No
			KH063SB152	Removed	No
		1000	KH086SB151	Removed	No
			KH086SB152	Removed	No
	3L + NP + PE	160	KH016SB241	Removed	No
			KH016SB242	Removed	No
		250	KH025SB241	Removed	No
			KH025SB242	Removed	No
		400	KH040SB241	Removed	No
			KH040SB242	Removed	No
		630	KH063SB241	Removed	No
			KH063SB242	Removed	No
		1000	KH086SB241	Removed	No
			KH086SB242	Removed	No
Switch and fuse carriers	3L + PE	1000	KH086SB331	Removed	No
			KH086SB332	Removed	No
	3P + PE	250	KH025SB331	Removed	No
			KH025SB332	Removed	No
		400	KH040SB331	Removed	No
			KH040SB332	Removed	No
		630	KH063SB331	Removed	No
			KH063SB332	Removed	No
	3P + PEN	1000	KH086SB351	Removed	No
			KH086SB352	Removed	No
	3L + N + PE	250	KH025SB341	Removed	No
			KH025SB342	Removed	No
			KH025SB441	Removed	No
			KH025SB442	Removed	No
		400	KH040SB341	Removed	No
			KH040SB342	Removed	No
			KH040SB441	Removed	No
			KH040SB442	Removed	No
		630	KH063SB341	Removed	No
			KH063SB342	Removed	No
			KH063SB441	Removed	No
			KH063SB442	Removed	No
		1000	KH086SB341	Removed	No
			KH086SB342	Removed	No

Canalis KH substitution by Canalis KT

Preserved KH tap-off units and substitution table

Bolted tap-off units

Protection	Polarity	Rating	Catologue number	Status	Substitued by
Switch and fuse carriers (con't)	3L + PEN	250	KH025SB351	Removed	No
			KH025SB352	Removed	No
		400	KH040SB351	Removed	No
			KH040SB352	Removed	No
		630	KH063SB351	Removed	No
			KH063SB352	Removed	No
Circuit breaker manuel	3L + PE	1000	KH086SB5311	Removed	No
			KH086SB5312	Removed	No
	3L + N + PE	250	KH025SB5411	Removed	No
			KH025SB5412	Removed	No
		400	KH040SB5411	Removed	No
			KH040SB5412	Removed	No
		630	KH063SB5411	Removed	No
			KH063SB5412	Removed	No
		1000	KH086SB5411	Removed	No
			KH086SB5412	Removed	No
	3L + PEN	250	KH025SB5511	Removed	No
			KH025SB5512	Removed	No
		400	KH040SB5511	Removed	No
			KH040SB5512	Removed	No
		630	KH063SB5511	Removed	No
			KH063SB5512	Removed	No
		1000	KH086SB5511	Removed	No
			KH086SB5512	Removed	No
Circuit breaker electrical controle	3P + PEN	250	KH025SB5521	Removed	No
		400	KH040SB5521	Removed	No
		630	KH063SB5521	Removed	No
	3L + N + PE	250	KH025SB5421	Removed	No
			KH025SB5422	Removed	No
		400	KH040SB5421	Removed	No
			KH040SB5422	Removed	No
		630	KH063SB5421	Removed	No
			KH063SB5422	Removed	No
	3L + PEN	250	KH025SB5522	Removed	No
		400	KH040SB5522	Removed	No
		630	KH063SB5522	Removed	No
Circuit breaker plug-out	3L + PEN	1000	KH040DD411	Removed	No
			KH0SB1393108	Removed	No
			KH0SB1393132	Removed	No
Others	-	1000	KH0SA345794	Removed	No
			KH0SB1041086	Removed	No
		1500	KH0SA1088568	Removed	No
		2000	KH0SA1088123	Removed	No

Canalis KTC

Tap-off units for Compact NSX, fixed, front-connected circuit breakers, not equipped

DB402027

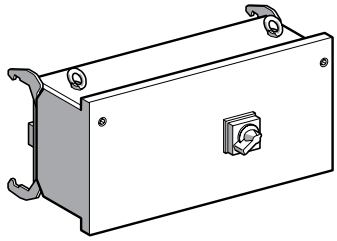

KH0●●SD5●●

The cover of the tap-off unit may be opened or closed only when the circuit breaker is in the Off position.

Plug-in tap-off units for extended rotary

System earthing arrangement (1)	Busbar trunking	TT-TNS-TNC-IT	TNC
	Tap-off unit	TT-TNS-TNS-IT	TNC
Tap-off polarity		3L + N + PE	3L + PEN
Tap-off diagram (e.g. circuit breaker protection)		DD210451 L1 L2 L3 N PE	DD210452 L1 L2 L3 N PE

Rating (A)	Type of circuit breaker	Cable capacity (mm²)	Cable clamp on (mm)	Cat. no.		Weight (kg)
250(2)	NSX250 N/H/L	1 x 150	30...70	**KH025SD541**	**KH025SD551**	32.00
630(2)	NSX630 N/H/L	2 x 300	2 x 30...70	**KH063SD541**	**KH063SD551**	45.00

(1) These units can be fitted either on Canalis KTC or KGF.
(2) IP31 Rating.

DB401483

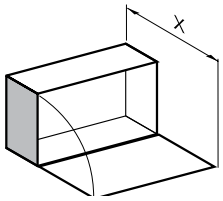

x = 520

DB401483

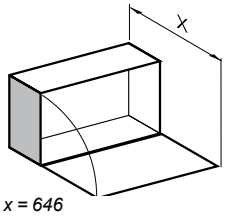

x = 646

KH025SD●●●

DD402103

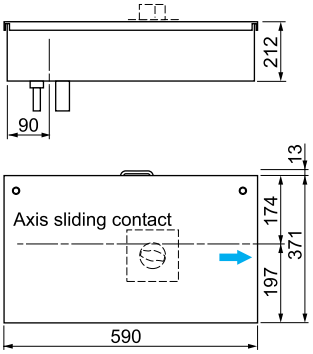

KH063SD●●●

DD402104

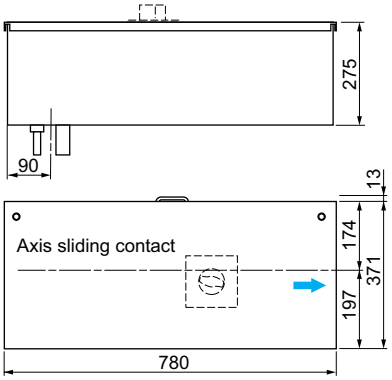

SE - Tap-off units with switch-disconnector internal arc tested IEC 61-641

DB411235

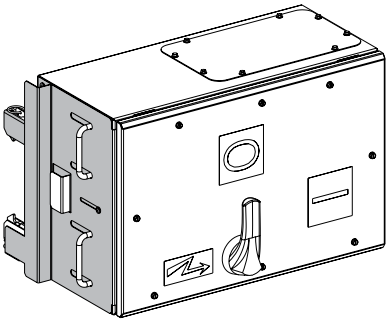

KHB0250SE●

The cover of the tap-off unit may be opened or closed only when the switch-disconnector is in the Off position.
To be installed on KT EH type or on former KHF or KGF distribution length.

System earthing arrangement	Busbar trunking	TT-TNS-TNC-IT[1] TNC
	Tap-off unit	TT-TNS-TNS-IT[1] TNC
Tap-off polarity		3L + N + PE[2] 3L + PEN
Tap-off diagram (e.g. fuse protection)		DD230226 L1 L2 L3 N PE; DD230228 L1 L2 L3 N PE

Rating (A)	Type of fuses	Connection	Max. size (mm2) L or N / PE	Cable gland[3] (not supplied)	Cable exit side	Cat. no.	Cat. no.	Weight (kg)
250[5]	DIN size 1	Terminals	1 x 150 / 1 x 75	ISO 32 max	Right & Left	**KHB0250SE4**		38
					Right & Left		**KHB0250SE5**	40

(1) The neutral must be protected or not distributed (3L + PE) for the IT system.
(2) Also suitable for tap-off unit 3L + PE (N not distributed, IT system also possible).
(3) Maximum diameter by unipolar cable.
(4) The tap-off unit is delivered with automatic clamps.
(5) IP55 Rating.

DB411234

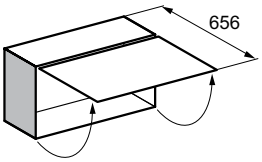

or

DB408227

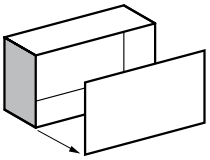

KHB0250SE●

DB411236

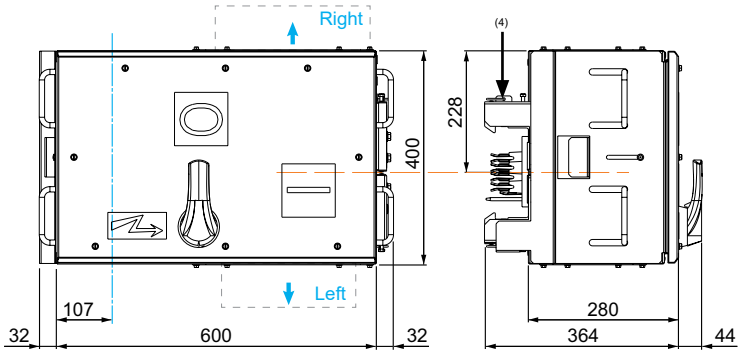

Cable exit
Center line of tap-off outlets
Axis of Canalis KT
Connection box to be fitted above or below

Option accessories	Cat. no.
Connecting box	**KTB0630ZA04**
Plate with 5 cable glands 24 to 40 mm	**KTB0000GP01**
Plate with 1 cable clamp 30 to 70 mm	**KTB0000GP02**
Plate with 2 cable clamps 30 to 70 mm	**KTB0000GP03**

DB408232

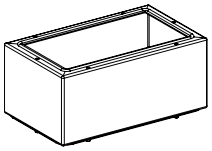

KTB0630ZA04

DB428870

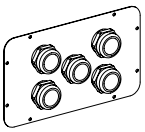

KTB0000GP01

DB428871

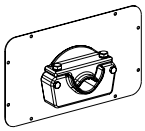

KTB0000GP02

DB428872

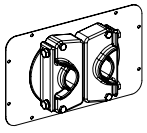

KTB0000GP03

Canalis KTC

SE - Tap-off units with switch-disconnector internal arc tested IEC 61-641

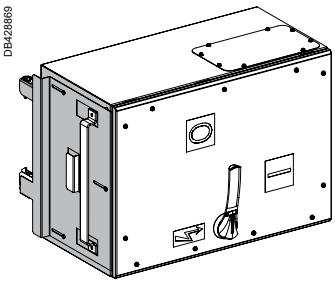

KHB0630SE●

The cover of the tap-off unit may be opened or closed only when the switch-disconnector is in the Off position.
To be installed on KT EH type or on former KHF or KGF distribution length.

System earthing arrangement	Busbar trunking	TT-TNS-TNC-IT(1) TNC	
	Tap-off unit	TT-TNS-TNS-IT(1) TNC	
Tap-off polarity		3L + N + PE(2)	3L + PEN
Tap-off diagram (e.g. fuse protection)		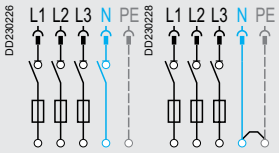	

Rating (A)	Type of fuses	Connection	Max. size (mm²) L or N / PE (kg)	Cable gland(3) (not supplied)	Cable exit side	Cat. no.	Cat. no.	Weight (kg)
630(4)(6)	DIN size 3	Terminals	2 x 300 / 1 x 150	ISO 70 max.	Right	KHB0630SE4R		72
					Left	KHB0630SE4L		72
					Right		KHB0630SE5R	78
					Left		KHB0630SE5L	78

(1) The neutral must be protected or not distributed (3L + PE) for the IT system.
(2) Also suitable for tap-off unit 3L + PE (N not distributed, IT system also possible).
(3) Maximum diameter by unipolar cable.
(4) De-rating coefficient to apply: 0.87.
(5) The tap-off unit is delivered with automatic clamps, the kit of connection bars is included in the reference and delivered in the box.
(6) IP55 Rating.

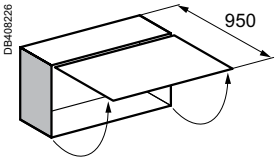

or

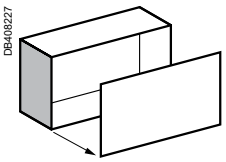

KHB0630SE●

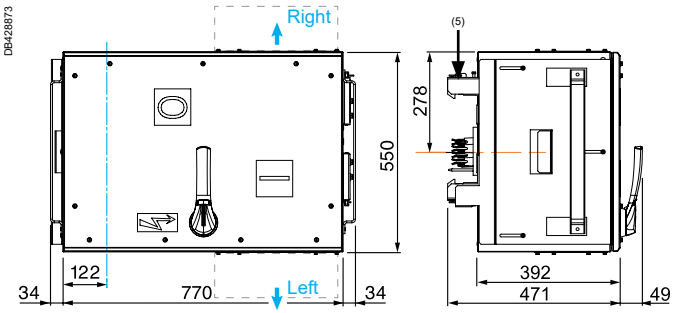

Cable exit
Center line of tap-off outlets
Axis of Canalis KT
Connection box to be fitted above or below

Option accessories	Cat. no.
Extension rotary handle	KTB0630ZA03
Connecting box	KTB0630ZA04
Plate with 5 cable glands 24 to 40 mm	KTB0000GP01
Plate with 1 cable clamp 30 to 70 mm	KTB0000GP02
Plate with 2 cable clamps 30 to 70 mm	KTB0000GP03

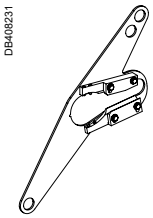

KTB0630ZA03

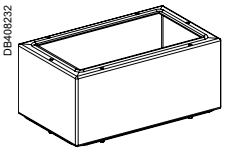

KTB0630ZA04

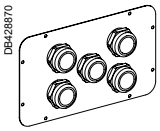

KTB0000GP01

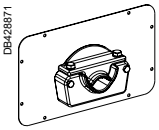

KTB0000GP02

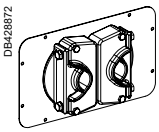

KTB0000GP03

Tap-off units with disconnector internal arc tested IEC 61-641

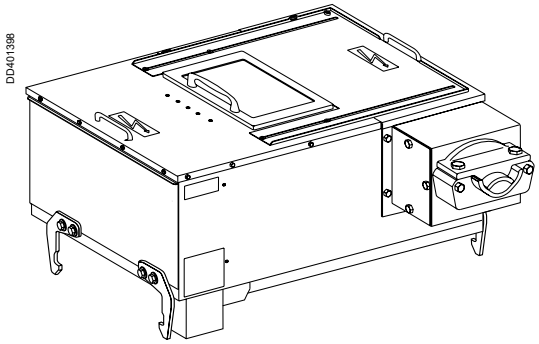

KH040SD9502

System earthing arrangement (1)		Busbar trunking	TNC	
		Tap-off unit	TNC	
Tap-off polarity			3L + PEN	
Tap-off diagram (e.g. fuse protection)			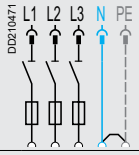	
Ith (A)		Fuse size	Cable capacity (mm²)	**Cat. no.**	**Weight (kg)**
400(2)	With MULLER disconnector	2	1 x 185	**KH040SD9502**	39.00
630(2)	With MULLER disconnector	3	2 x 185	**KH063SD9502**	46.00

(1) These units can be fitted either on Canalis KTC or KGF.
(2) IP43 Rating.

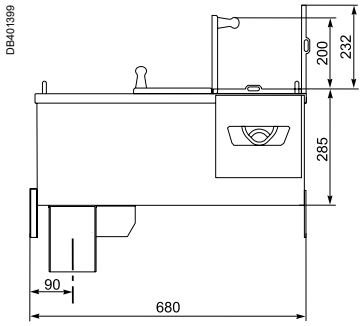

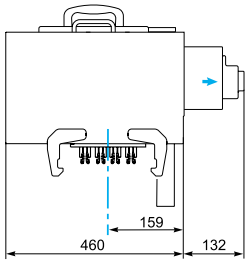

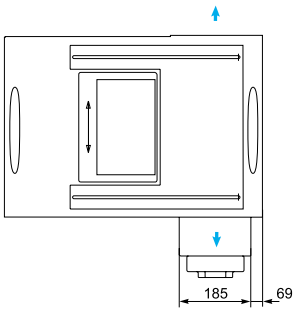

Connecting box is equipped with a 30 to 70 mm aluminium cable clamp.

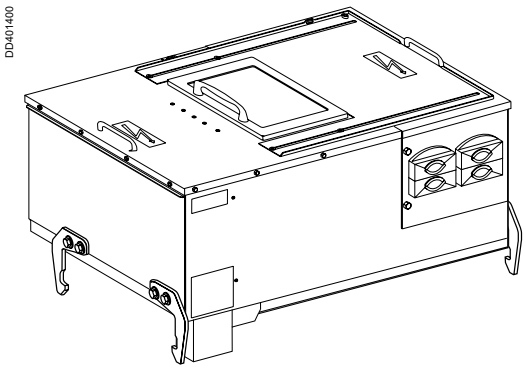

KH063SD9502

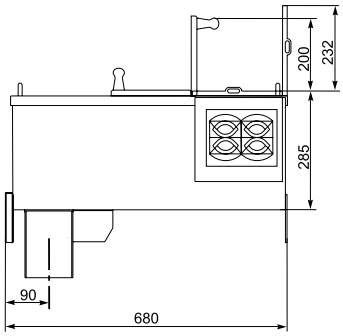

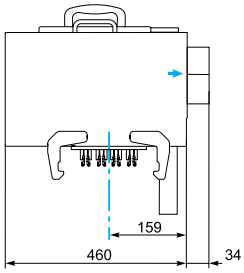

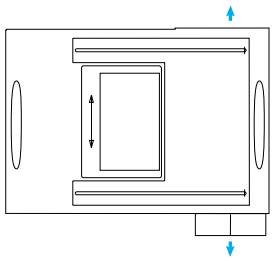

Connecting plate is equipped with 4 plastic cable clamps.

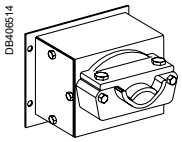

KH040ZA07

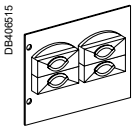

KH063ZA07

If 2 cables exit are needed, stand alone connecting box can be ordered.

Designation	Cat. no.
Connecting box for KH040SD9502 with a 30 to 70 mm aluminium cable clamp	**KH040ZA07**
Connecting plate for KH063SD9502 with 4 plastic clamps	**KH063ZA07**

Expansion of a Canalis KH line by means of Canalis KT

Canalis KTC

DB401535

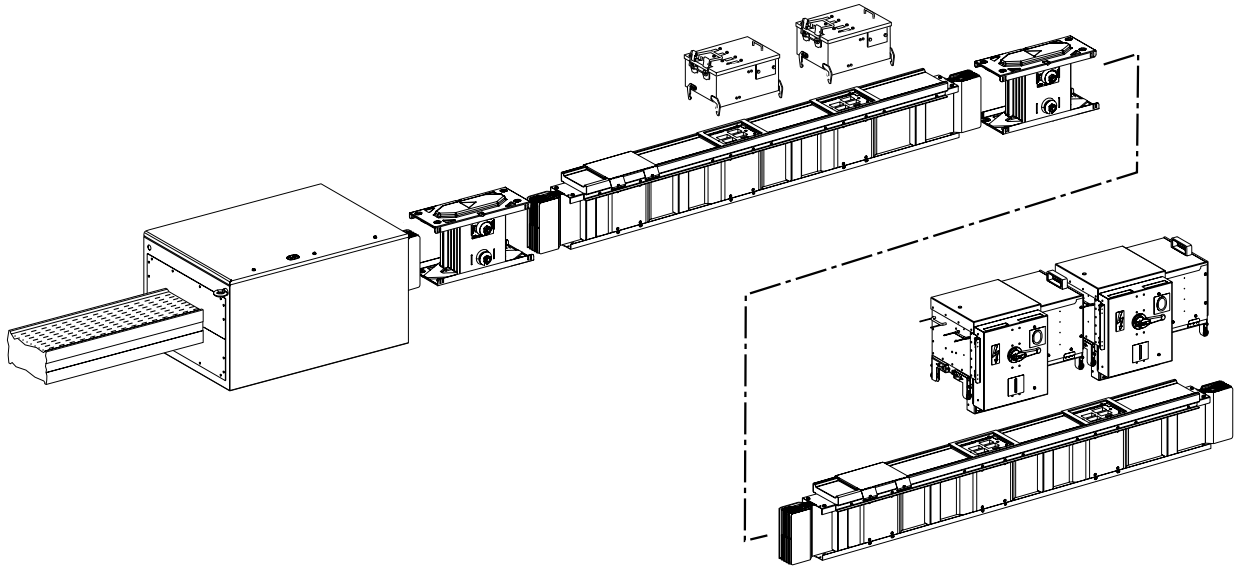

Expansion of a Canalis KH line by means of Canalis KT with a T-piece tap-off unit

DB401534

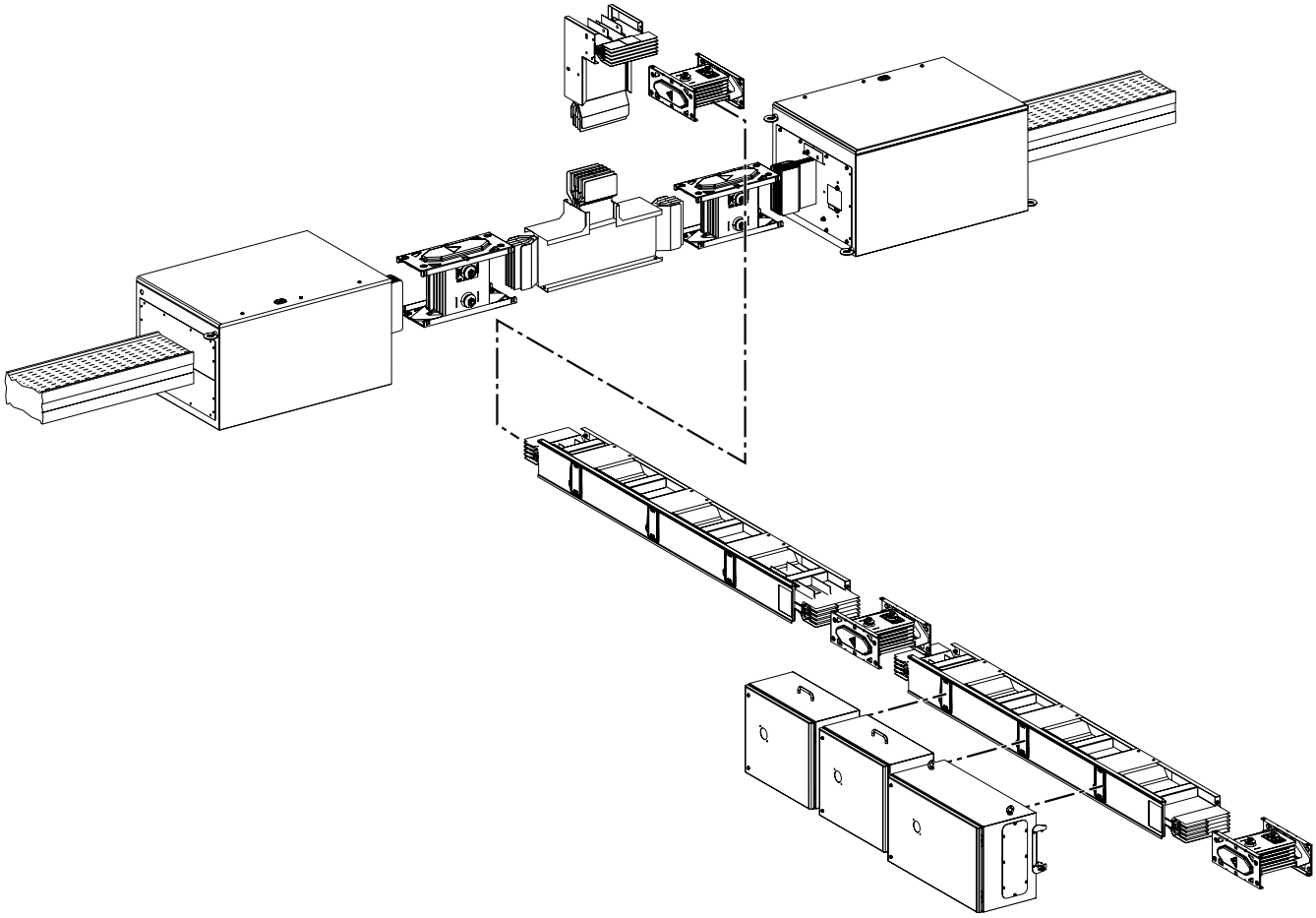

Mid KT line power supply with KH tap-off units installed

Canalis KTC

DB401497

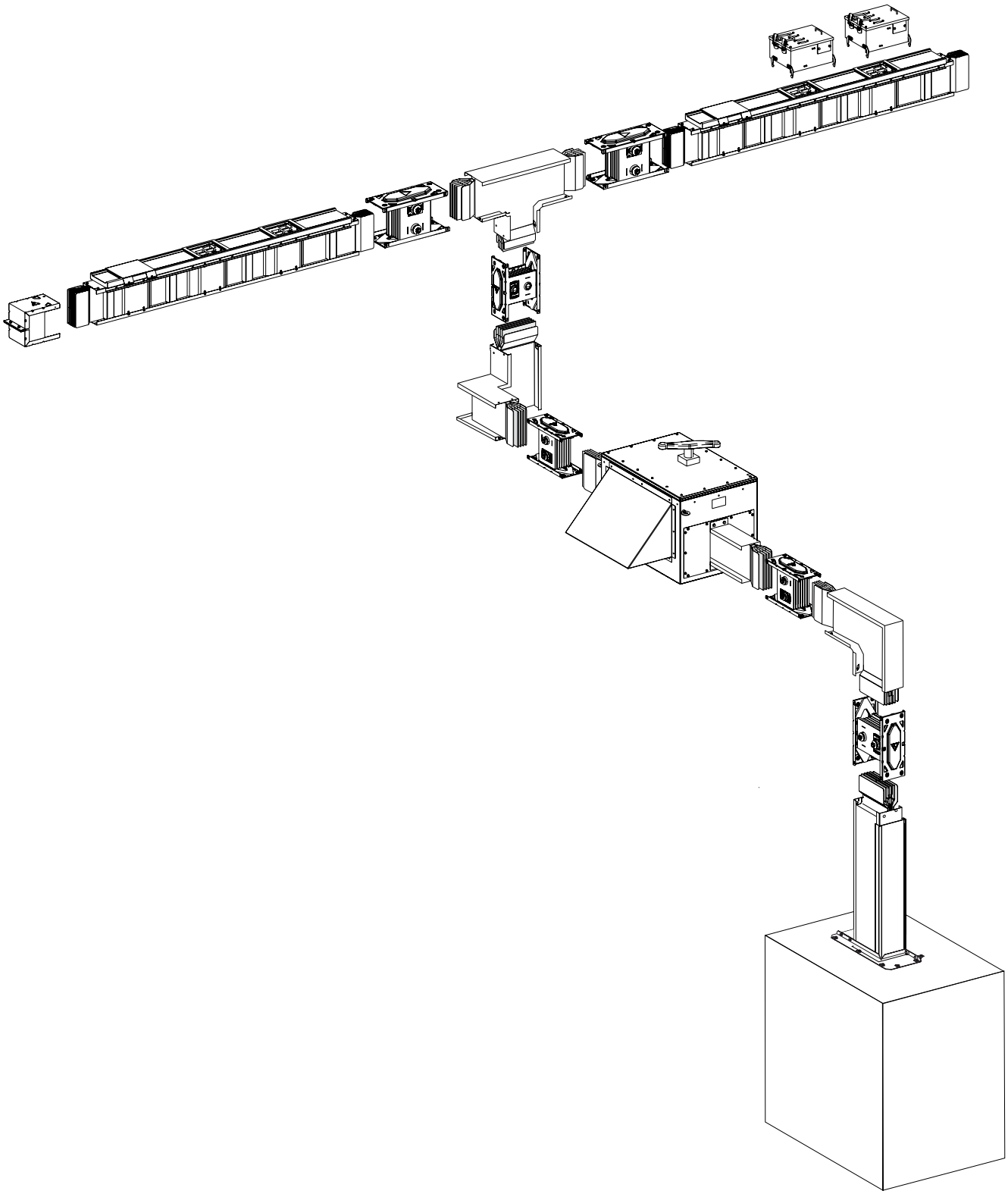

Design guide

Introduction 3
Presentation and description 23
Catalogue numbers and dimensions 47

Characteristics 142
Canalis KTC 3L + PE 142
Canalis KTC 3L + N + PE 143
Canalis KTC 3L + N + PER 144

Other characteristics 145

Determining the rating 146
Providing power distribution using Canalis 146

Sizing the busbar trunking 148

Protection of circuits supplied by several paralleled transformers 150

Coordination 152
Protection of busbar trunking against overloads 152
Protection against short-circuits 154

Circuit breaker / busbar trunking coordination 155
Non-limiting or time-delayed circuit breaker 155
Limiter circuit breaker 156

Protecting busbar trunking with a Compact NS circuit breaker 157

Selection guide 158

Degree of protection 164

Harmonic currents 166

Direct current 168

Frequencies 170
400 Hz 170

Measurements and metering 171
Canalis part of StruxureWare 171

Fire resistance 172

Seismic resistance 174

Testing and commissioning procedure 176

Installation guide 181
Recommendations 239
Index 244

D

Canalis KTC

Characteristics of run sections

	Symbol	Unit	Busbar trunking rating (A)								
General characteristics			**1000**	**1350**	**1600**	**2000**	**2500**	**3200**	**4000**	**5000**	**6300**
Compliance with standards			IEC/EN 61439-6								
Protection degree	IP		55 Any installation (indoors only) is possible for the busbar truncking: edgewise, flat or vertical. See test condition, page 147.								
Shock resistance	IK		08								
Nominal rated current at an ambient temperature of 35°C	Inc	A	1000	1350	1600	2000	2500	3200	4000	5000	6300
Rated insulation voltage	Ui	V	1000								
Rated operating voltage	Ue	V	1000								
Operating frequency	f	Hz	50/60 (for 60 to 400 Hz AC or for DC, consult us)								
Short-circuit current withstand											
Standard version 3L + PE											
Allowable rated short-time withstand current (t = 1 s)	Icw	kA	50	50	65	70	80	86	90	95	120
Allowable rated peak current	Ipk	kA	110	110	143	154	176	189	198	209	264
Maximum thermal stress I^2t (t = 1 s)	I^2t	$A^2s\ 10^6$	2500	2500	4225	12100	12769	7396	8100	9025	14400
Conductor characteristics											
Phase conductors											
Average resistance at an ambient temperature of 20°C	R_{20}	mΩ/m	0.041	0.029	0.024	0.018	0.014	0.012	0.009	0.007	0.006
Average resistance at Inc and at 35°C	R_1	mΩ/m	0.049	0.035	0.029	0.022	0.018	0.015	0.012	0.009	0.0075
Average reactance at Inc and at 35°C and at 50 Hz	X_1	mΩ/m	0.022	0.016	0.015	0.013	0.011	0.008	0.007	0.007	0.004
Average impedance at Inc and at 35°C and at 50 Hz	Z_1	mΩ/m	0.054	0.039	0.033	0.026	0.021	0.017	0.014	0.012	0.0085
PE = casing											
Average resistance at an ambient temperature of 20°C		mΩ/m	0.223	0.198	0.184	0.162	0.144	0.130	0.108	0.094	0.065
Casing (equivalent copper cross-section)		mm²	109	117	125	137	145	157	163	171	313
Fault loop characteristics											
Symmetrical components method – Ph/PE at 20°C – Average resistance	$R_{0\ ph/PE}$	mΩ/m	0.757	0.630	0.570	0.492	0.431	0.385	0.324	0.279	0.193
Symmetrical components method – Ph/PE at 20°C – Average reactance	$X_{0\ ph/PE}$	mΩ/m	0.666	0.489	0.410	0.315	0.247	0.196	0.147	0.113	0.098
Symmetrical components method – Ph/PE at 20°C – Average impedance	$Z_{0\ ph/PE}$	mΩ/m	1.009	0.797	0.702	0.584	0.497	0.432	0.356	0.301	0.217
Impedance method – At 20°C – Average resistance – Ph/Ph	$R_{b0\ ph/ph}$	mΩ/m	0.078	0.056	0.047	0.036	0.029	0.025	0.019	0.015	0.013
Impedance method – At 20°C – Average resistance – Ph/PE	$R_{b0\ ph/PE}$	mΩ/m	0.483	0.390	0.333	0.270	0.227	0.195	0.157	0.129	0.098
Impedance method – At Inc and at 35°C – Average resistance – Ph/Ph	$R_{b1\ ph/ph}$	mΩ/m	0.094	0.068	0.057	0.044	0.036	0.032	0.024	0.019	0.016
Impedance method – At Inc and at 35°C – Average resistance – Ph/PE	$R_{b1\ ph/PE}$	mΩ/m	0.580	0.476	0.407	0.330	0.282	0.246	0.201	0.165	0.123
Impedance method – At Inc and at 35°C and at 50 Hz – Average reactance – Ph/Ph	$X_{b\ ph/ph}$	mΩ/m	0.040	0.029	0.024	0.019	0.015	0.013	0.010	0.008	0.007
Impedance method – At Inc and at 35°C and at 50 Hz – Average reactance – Ph/PE	$X_{b\ ph/PE}$	mΩ/m	0.426	0.329	0.275	0.212	0.170	0.141	0.106	0.084	0.071
Other characteristics											
Voltage drop											
			Line-to-line voltage drop, in volts (V) per 100 metres and per amp (A) at 50 Hz with load spread over the run. For the case of loads concentrated at the end of a run, the voltage drops are double those shown in this table. This calculation table applies to three-phase loads. For single-phase loads, the voltage drop given in the table is divided by 1.732.								
For a cosine φ of	1	V/100 m/A	0.0043	0.0031	0.0026	0.0019	0.0015	0.0013	0.0010	0.0008	0.00065
	0.9	V/100 m/A	0.0047	0.0034	0.0029	0.0022	0.0018	0.0015	0.0012	0.0010	0.00075
	0.8	V/100 m/A	0.0046	0.0033	0.0028	0.0022	0.0018	0.0015	0.0012	0.0010	0.00075
	0.7	V/100 m/A	0.0044	0.0031	0.0027	0.0021	0.0018	0.0014	0.0012	0.0010	0.0007
Average weight											
3L + PE		kg/m	19	25	29	36	44	51	66	82	102
Fire load value											
		kWh/m	2.1	2.9	3.2	3.9	5.7	6.2	8.9	11.2	12.4
Radiated magnetic field											
Radiated magnetic field strength 1 metre from the trunking	B	µT	0.4	0.6	0.8	1.1	1.5	2.1	2.6	3.7	4.5

Characteristics of run sections

General characteristics	Symbol	Unit	Busbar trunking rating (A) 1000	1350	1600	2000	2500	3200	4000	5000	6300
Compliance with standards			IEC/EN 61439-6								
Protection degree	IP		55 Any installation (indoors only) is possible for the busbar truncking: edgewise, flat or vertical. See test condition, page 147.								
Shock resistance	IK		08								
Nominal rated current at an ambient temperature of 35°C	Inc	A	1000	1350	1600	2000	2500	3200	4000	5000	6300
Rated insulation voltage	Ui	V	1000								
Rated operating voltage	Ue	V	1000								
Operating frequency	f	Hz	50/60 (for 60 to 400 Hz AC or for DC, consult us)								

Short-circuit current withstand

Standard version 3L + N + PE

Allowable rated short-time withstand current (t = 1 s)	Icw	kA	50	50	65	70	80	86	90	95	120
Allowable rated peak current	Ipk	kA	110	110	143	154	176	189	198	209	264
Maximum thermal stress I^2t (t = 1 s)	I^2t	$A^2s\ 10^6$	2500	2500	4225	4900	6400	7396	8100	9025	14400

Conductor characteristics

Phase conductors

Average resistance at an ambient temperature of 20°C	R_{20}	mΩ/m	0.041	0.029	0.024	0.018	0.014	0.012	0.009	0.007	0.006
Average resistance at Inc and at 35°C	R_1	mΩ/m	0.049	0.035	0.029	0.022	0.018	0.015	0.012	0.009	0.0075
Average reactance at Inc and at 35°C and at 50 Hz	X_1	mΩ/m	0.022	0.016	0.015	0.013	0.011	0.008	0.007	0.007	0.004
Average impedance at Inc and at 35°C and at 50 Hz	Z_1	mΩ/m	0.054	0.039	0.033	0.026	0.021	0.017	0.014	0.012	0.0085

PE = casing

Average resistance at an ambient temperature of 20°C		mΩ/m	0.223	0.198	0.184	0.162	0.144	0.130	0.108	0.094	0.065
Casing (equivalent copper cross-section)		mm²	109	117	125	137	145	157	163	171	313

Fault loop characteristics

Symmetrical components method	Ph/N at 20°C	Average resistance		$R_{0\ ph/N}$	mΩ/m	0.192	0.138	0.116	0.089	0.071	0.062	0.046	0.037	0.031
		Average reactance		$X_{0\ ph/N}$	mΩ/m	0.124	0.089	0.075	0.058	0.044	0.040	0.030	0.024	0.020
		Average impedance		$Z_{0\ ph/N}$	mΩ/m	0.229	0.164	0.138	0.106	0.084	0.074	0.055	0.044	0.037
	Ph/PE at 20°C	Average resistance		$R_{0\ ph/PE}$	mΩ/m	0.757	0.630	0.570	0.492	0.431	0.385	0.324	0.279	0.193
		Average reactance		$X_{0\ ph/PE}$	mΩ/m	0.666	0.489	0.410	0.315	0.247	0.196	0.147	0.113	0.098
		Average impedance		$Z_{0\ ph/PE}$	mΩ/m	1.009	0.797	0.702	0.584	0.497	0.432	0.356	0.301	0.217
Impedance method	At 20°C	Average resistance	Ph/Ph	$R_{b0\ ph/ph}$	mΩ/m	0.078	0.056	0.047	0.036	0.029	0.025	0.019	0.015	0.013
			Ph/N	$R_{b0\ ph/N}$	mΩ/m	0.080	0.057	0.048	0.037	0.029	0.026	0.019	0.015	0.013
			Ph/PE	$R_{b0\ ph/PE}$	mΩ/m	0.483	0.390	0.333	0.270	0.227	0.195	0.157	0.129	0.098
	At Inc and at 35°C	Average resistance	Ph/Ph	$R_{b1\ ph/ph}$	mΩ/m	0.094	0.068	0.057	0.044	0.036	0.032	0.024	0.019	0.016
			Ph/N	$R_{b1\ ph/N}$	mΩ/m	0.096	0.070	0.059	0.045	0.036	0.032	0.024	0.020	0.016
			Ph/PE	$R_{b1\ ph/PE}$	mΩ/m	0.580	0.476	0.407	0.330	0.282	0.246	0.201	0.165	0.123
	At Inc and at 35°C and at 50 Hz	Average reactance	Ph/Ph	$X_{b\ ph/ph}$	mΩ/m	0.040	0.029	0.024	0.019	0.015	0.013	0.010	0.008	0.007
			Ph/N	$X_{b\ ph/N}$	mΩ/m	0.065	0.047	0.040	0.030	0.024	0.021	0.016	0.013	0.011
			Ph/PE	$X_{b\ ph/PE}$	mΩ/m	0.426	0.329	0.275	0.212	0.170	0.141	0.106	0.084	0.071

Other characteristics

Voltage drop

Line-to-line voltage drop, in volts (V) per 100 metres and per amp (A) at 50 Hz with load spread over the run. For the case of loads concentrated at the end of a run, the voltage drops are double those shown in this table.
This calculation table applies to three-phase loads. For single-phase loads, the voltage drop given in the table is divided by 1.732.

For a cosine φ of	1	V/100 m/A	0.0043	0.0031	0.0026	0.0019	0.0015	0.0013	0.0010	0.0008	0.00065
	0.9	V/100 m/A	0.0047	0.0034	0.0029	0.0022	0.0018	0.0015	0.0012	0.0010	0.00075
	0.8	V/100 m/A	0.0046	0.0033	0.0028	0.0022	0.0018	0.0015	0.0012	0.0010	0.00075
	0.7	V/100 m/A	0.0044	0.0031	0.0027	0.0021	0.0018	0.0014	0.0012	0.0010	0.0007

Average weight

3L + N + PE		kg/m	23	31	35	45	55	64	84	104	128

Fire load value

		kWh/m	2.5	3.6	4.1	5.9	7.3	8.0	11.5	14.4	16

Radiated magnetic field

Radiated magnetic field strength 1 metre from the trunking	B	µT	0.4	0.6	0.8	1.1	1.5	2.1	2.6	3.7	4.5

Characteristics
Canalis KTC 3L + N + PE

Canalis KTC
Characteristics of run sections

	Symbol	Unit	Busbar trunking rating (A)								
General characteristics			**1000**	**1350**	**1600**	**2000**	**2500**	**3200**	**4000**	**5000**	**6300**
Compliance with standards			IEC/EN 61439-6								
Protection degree	IP		55 Any installation (indoors only) is possible for the busbar truncking: edgewise, flat or vertical. See test condition, page 147.								
Shock resistance	IK		08								
Nominal rated current at an ambient temperature of 35°C	Inc	A	1000	1350	1600	2000	2500	3200	4000	5000	6300
Rated insulation voltage	Ui	V	1000								
Rated operating voltage	Ue	V	1000								
Operating frequency	f	Hz	50/60 (for 60 to 400 Hz AC or for DC, consult us)								
Short-circuit current withstand											
Standard version 3L + N + PER											
Allowable rated short-time withstand current (t = 1 s)	Icw	kA	50	50	65	70	80	86	90	95	120
Allowable rated peak current	Ipk	kA	110	110	143	154	176	189	198	209	264
Maximum thermal stress I^2t (t = 1 s)	I^2t	$A^2s\ 10^6$	2500	2500	4225	4900	6400	7396	8100	9025	14400
Reinforced version 3L + N + PER (optional)											
Allowable rated short-time withstand current (t = 1 s)	Icw	kA	65	65	85	110	113	113	120	120	120
Allowable rated peak current	Ipk	kA	143	143	187	242	248	248	264	264	264
Maximum thermal stress	I^2t	$A^2s\ 10^6$	4225	4225	7225	12100	12769	12769	14400	14400	14400
Conductor characteristics											
Phase conductors											
Average resistance at an ambient temperature of 20°C	R_{20}	mΩ/m	0.041	0.029	0.024	0.018	0.014	0.012	0.009	0.007	0.006
Average resistance at Inc and at 35°C	R_1	mΩ/m	0.049	0.035	0.029	0.022	0.018	0.015	0.012	0.009	0.0075
Average reactance at Inc and at 35°C and at 50 Hz	X_1	mΩ/m	0.022	0.016	0.015	0.013	0.011	0.008	0.007	0.007	0.004
Average impedance at Inc and at 35°C and at 50 Hz	Z_1	mΩ/m	0.054	0.039	0.033	0.026	0.021	0.017	0.014	0.012	0.0085
PE = internal copper protective conductor											
Average resistance at an ambient temperature of 20°C		mΩ/m	0.051	0.040	0.035	0.027	0.022	0.019	0.014	0.012	0.010
Copper cross-section		mm²	210	300	360	480	600	720	960	1200	1440
Fault loop characteristics											
Symmetrical components method – Ph/N at 35°C – Average resistance	$R_{0\ ph/N}$	mΩ/m	0.189	0.134	0.113	0.085	0.069	0.057	0.043	0.035	0.029
Symmetrical components method – Ph/N at 35°C – Average reactance	$X_{0\ ph/N}$	mΩ/m	0.087	0.061	0.054	0.042	0.041	0.029	0.022	0.018	0.015
Symmetrical components method – Ph/N at 35°C – Average impedance	$Z_{0\ ph/N}$	mΩ/m	0.208	0.148	0.125	0.095	0.080	0.064	0.049	0.039	0.032
Symmetrical components method – Ph/PE at 35°C – Average resistance	$R_{0\ ph/PE}$	mΩ/m	0.212	0.162	0.139	0.109	0.090	0.076	0.059	0.048	0.038
Symmetrical components method – Ph/PE at 35°C – Average reactance	$X_{0\ ph/PE}$	mΩ/m	0.067	0.051	0.043	0.034	0.028	0.024	0.019	0.015	0.012
Symmetrical components method – Ph/PE at 35°C – Average impedance	$Z_{0\ ph/PE}$	mΩ/m	0.222	0.169	0.145	0.114	0.094	0.080	0.062	0.051	0.040
Impedance method – At 20°C – Average resistance – Ph/Ph	$R_{b0\ ph/ph}$	mΩ/m	0.083	0.058	0.048	0.036	0.029	0.024	0.018	0.014	0.012
Impedance method – At 20°C – Average resistance – Ph/N	$R_{b0\ ph/N}$	mΩ/m	0.087	0.059	0.019	0.239	0.199	0.170	0.135	0.110	0.085
Impedance method – At 20°C – Average resistance – Ph/PER	$R_{b0\ ph/PE}$	mΩ/m	0.107	0.079	0.067	0.051	0.042	0.035	0.027	0.022	0.017
Impedance method – At Inc and at 35°C – Average resistance – Ph/Ph	$R_{b1\ ph/ph}$	mΩ/m	0.099	0.071	0.059	0.044	0.036	0.030	0.023	0.019	0.015
Impedance method – At Inc and at 35°C – Average resistance – Ph/N	$R_{b1\ ph/N}$	mΩ/m	0.104	0.072	0.060	0.045	0.036	0.031	0.023	0.019	0.016
Impedance method – At Inc and at 35°C – Average resistance – Ph/PE	$R_{b1\ ph/PE}$	mΩ/m	0.129	0.096	0.082	0.063	0.052	0.044	0.034	0.028	0.023
Impedance method – At Inc and at 35°C and at 50 Hz – Average reactance – Ph/Ph	$X_{b\ ph/ph}$	mΩ/m	0.028	0.020	0.017	0.013	0.011	0.009	0.004	0.006	0.005
Impedance method – At Inc and at 35°C and at 50 Hz – Average reactance – Ph/N	$X_{b\ ph/N}$	mΩ/m	0.043	0.032	0.028	0.021	0.017	0.015	0.011	0.009	0.008
Impedance method – At Inc and at 35°C and at 50 Hz – Average reactance – Ph/PE	$X_{b\ ph/PE}$	mΩ/m	0.050	0.040	0.035	0.029	0.023	0.020	0.016	0.013	0.010
Other characteristics											
Voltage drop											
			Line-to-line voltage drop, in volts (V) per 100 metres and per amp (A) at 50 Hz with load spread over the run. For the case of loads concentrated at the end of a run, the voltage drops are double those shown in this table. This calculation table applies to three-phase loads. For single-phase loads, the voltage drop given in the table is divided by 1.732.								
For a cosine φ of	1	V/100 m/A	0.0043	0.0031	0.0026	0.0019	0.0015	0.0013	0.0010	0.0008	0.00065
	0.9	V/100 m/A	0.0047	0.0034	0.0029	0.0022	0.0018	0.0015	0.0012	0.0010	0.00075
	0.8	V/100 m/A	0.0046	0.0033	0.0028	0.0022	0.0018	0.0015	0.0012	0.0010	0.00075
	0.7	V/100 m/A	0.0044	0.0031	0.0027	0.0021	0.0018	0.0014	0.0012	0.0010	0.0007
Average weight											
3L + N + PER		kg/m	25	33	39	49	60	71	92	114	142
Fire load value											
		kWh/m	2.5	3.6	4.1	5.9	7.3	8.0	11.5	14.4	16
Radiated magnetic field											
Radiated magnetic field strength 1 metre from the trunking	B	µT	0.4	0.6	0.8	1.1	1.5	2.1	2.6	3.7	4.5

Characteristics of run sections

Other characteristics

Choice of products when harmonics are present (see “harmonic currents” for more details).

THD ⩽ 15 %	15 % < THD ⩽ 33 %	THD > 33 %	Busbar trunking	Rating (A)
1000	800	630	KTC	1000
1350	1000	800	KTC	1350
1600	1350	1000	KTC	1600
2000	1600	1350	KTC	2000
2500	2000	1600	KTC	2500
3200	2500	2000	KTC	3200
4000	3200	2500	KTC	4000
5000	4000	3200	KTC	5000
6300	5000	4000	KTC	6300

Example. For a total rms current of 2356 A (estimation based on power drawn by loads, including harmonics), the operational current is 2500 A.
THD is estimated at 30 %. The appropriate trunking is KTC 3200 A.

Allowable current as a function of ambient temperature
Canalis busbar trunking is sized to operate at an ambient air does not exceed +40°C and its average over a period of 24 h does not exceed +35°C, above this value, the busbar trunking must be derated.
Where k1 = ambient temperature derating coefficient.

	Symbol	Unit	Ambiant temperature 24 hours average				
		°C	35	40	45	50	55
Busbar trunking installed indoors	k1	%	k1=1	k1=0.97	k1=0.93	k1=0.90	k1=0.86
Busbar trunking installed outside under an aluminium roof	k1	%	See "Busbar trunking installed outside under an aluminium roof" on page 147				
Busbar trunking installed in a fire duct	k1	%	Please, see your sales office.				

Through-wall fire barrier
Tests performed in accordance with the requirements of NF EN 1363-1 and those specific to EN 1366-3.

	Performance criteria	
	Fire integrity	Thermal insulation
Without external fire barrier	120 mn	30 mn
With external fire barrier	120 mn	120 mn

Tap-off unit characteristics

General characteristics	Symbol	Unit	
Protection degree	IP		55
Shock resistance	IK		08
Rated insulation voltage	Ui	V	400 or 500 depending on protection device
Rated operating voltage	Ue	V	
Operating frequency	f	Hz	50/60

Determining the rating
Providing power distribution using Canalis

Canalis KTC

Apart from extreme atmospheres, Canalis can be installed anywhere!
The order described below is only aimed at presenting the different stages for a simple installation.
For a detailed design, it is necessary to use appropriate tools, approved by control bodies, in compliance with local installation standards.
The **Ecodial** software, edited by Schneider Electric, meets this requirement perfectly.

Design order:
1 – Define run layouts.
2 – Identify external influences.
3 – Determine the current rating (Ib).
4 – Calculate the nominal current (In) taking into account derating coefficients.
5 – Choose the busbar trunking rating.
6 – Check the rating with respect to allowable voltage drop.
7 – Check busbar trunking overloads.
8 – Check the rating with respect to short-circuit withstand current.
9 – Choose the source and feeder circuit breakers.

1 - Canalis busbar trunking layout

The layout of the distribution runs depends on the position of the loads and where the source is located.
Load protection is placed in the tap-off boxes, at the point of use.

A single and same Canalis busbar trunking supplies a group of loads of different ratings.

Schneider Electric has tools you can use to help you choose the architecture best suited to your application:
- the **Idpro software** to simulate the organisation of your electrical networks
- **application orientated technical guides** (car industry, data centers, shopping centres, etc).

2 - Identification of external influences

DD202142

Protection degree
Canalis KT busbar trunking is IP55 and IPxxD by construction.
This protection degree protects the busbar trunking against:
- dust
- penetration by a 1mm diameter wire
- water projections from all directions.

It can be installed in almost all premises; for more details see the "Determining the protection degree" page 164.

Wherever the busbar trunking must pass outside the building, an aluminium roof can be supplied; consult your Schneider Electric distributor for information concerning this option.

Corrosive atmosphere
The busbar trunking has been qualified for industrial atmospheres.
For sulphurous atmospheres such as sulphur dioxide (SO_2) and hydrogen sulphide (H_2S), there is a suitable Canalis KT solution; consult your Schneider Electric distributor for more information on this option.
Example: paper mills, water treatment works, etc.

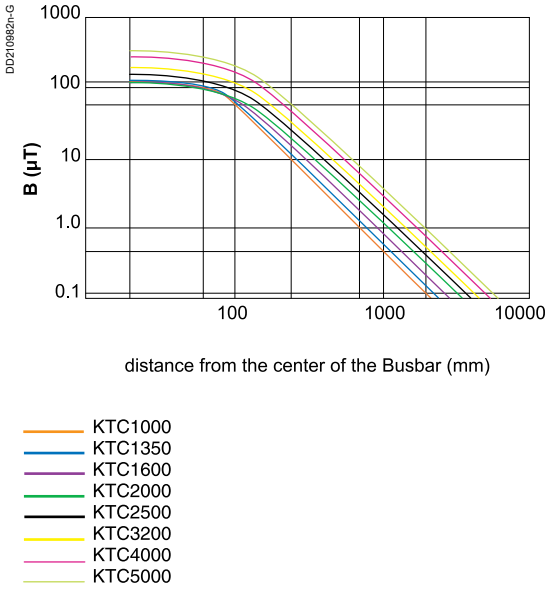

Radiated electromagnetic fields

According to the WHO (World Health Organisation), exposure to radiated electromagnetic fields above 0.2 micro Tesla can be dangerous causing a risk of cancer over the long term. Some countries have standardised the limit: Sweden = 0.2 µT, at a distance of 1 metre.
All electrical conductors generate a magnetic field, the strength of which is proportional to the distance between them. The Canalis busbar trunking concept (metal casing and conductors near together) helps to considerably reduce radiated electromagnetic fields.
In specific cases where particularly low values are required (computer rooms, hospitals, some offices), it is important to keep in mind the following:

- the induction generated around 3-phase distribution. This is proportional to the current and the distance between the conductors, and inversely proportional to the square of the distance with respect to the busbar trunking and the screening effect of the case
- the induction generated around busbar trunking. This is less than the induction generated around an equivalent cable distribution
- Canalis' steel casing. This attenuates the induction more than an equivalent aluminium casing of the same thickness (screening effect)
- the induction generated around busbar trunking with sandwiched bars. This is particularly low because of the short distance between the bars and the additional attenuation provided by the steel casing.

3 - Determining the current rating (Ib)

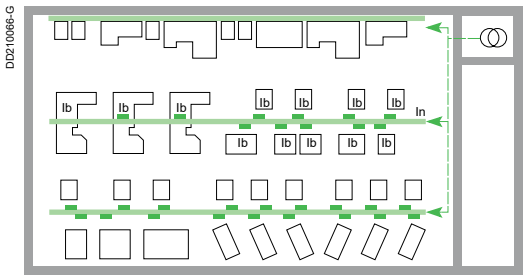

Calculation of the total current (Ib) absorbed by a run is equal to the sum of the currents absorbed by all of the loads.
The loads do not all operate at the same time and, as they are not continuously at full load, a stacking or simultaneity factor Ks has to be taken into account:
Ib = Σ Ib load x Ks

Stacking factor Ks depending on the number of loads according to IEC 61439- 1

Application	Number of loads	Ks coefficient
Lighting, heating	-	1
Distribution (mechanic workshop)	2...3	0.9
	4...5	0.8
	6...9	0.7
	10...40	0.6
	40 and over	0.5

Caution: for industrial installations, remember to take into account future increases in the number of machines. A 20 % reserve is recommended.

4 - Calculating nominal current (In) by applying a derating coefficient

Ambient temperature
Canalis busbar trunking is sized to operate at an average ambient temperature of 35°C, above this value, the busbar trunking must be derated.

Example: Canalis KTC1350 A installed inside with an ambient temperature of 50°C:
In = 1350 x 0.90 = 1215 A.

In ⩾ Ib x k1 = Iz

Where k1 = ambient temperature derating coefficient.

Type of installation		Canalis KT	Ambiant temperature 24 hours average (°C)				
			35	40	45	50	55
Busbar trunking installed inside		All	1	0.97	0.93	0.90	0.86
Busbar trunking installed outside under an aluminium roof		All	0.86	0.83	0.80	0.77	0.74
Busbar trunking installed in a fire duct			Please, see your sales office.				

Canalis KTC

5 - Choosing the busbar trunking rating according to the nominal current In

Nominal current In (A)	Busbar trunking
0 to 1000	KTC1000
1001 to 1350	KTC1350
1351 to 1600	KTC1600
1601 to 2000	KTC2000
2001 to 2500	KTC2500
2501 to 3200	KTC3200
3201 to 4000	KTC4000
4001 to 5000	KTC5000
5001 to 6300	KTC6300

6 - Checking the rating with respect to allowable voltage drop

The voltage drop between the start and all points of use must not be greater than the values in the table below:

Installation supplied by:	Lighting	Other use
Low voltage public distribution network	3 %	5 %
High voltage distribution network	6 %	8 %

The allowable voltage drop is that which is compatible with correct load operation (refer to manufacturers' guides).
■ Read voltage drop in V / 100 m/A for the busbar trunking chosen in accordance with temperature rise.
■ Determine the voltage drop for the worst case loads, i.e. those furthest from the source and for the highest current.
If the voltage drop exceeds allowable limits, choose the next rating up.
Re-check the voltage drop for the new rating.

Voltage drop, in volts per 100 metres and per amp for 3-phase 50 Hz current with load spread over the run. For loads concentrated at the end of a run (transport), the voltage drops are double those shown in the table below:

Delta U for evenly distributed loads (V/100m/A)									
	KTC10	KTC13	KTC16	KTC20	KTC25	KTC32	KTC40	KTC50	KTC63
Cosine φ = 1	0.0043	0.0031	0.0026	0.0019	0.0015	0.0013	0.0010	0.0008	0.00065
Cosine φ = 0.9	0.0047	0.0034	0.0029	0.0022	0.0018	0.0015	0.0012	0.0010	0.00075
Cosine φ = 0.8	0.0046	0.0033	0.0028	0.0022	0.0018	0.0015	0.0012	0.0010	0.00075
Cosine φ = 0.7	0.0044	0.0031	0.0027	0.0021	0.0018	0.0014	0.0012	0.0010	0.0007

Example: for the KTC1600 A busbar trunking:
Ib = 1530 A
In = 1600 A
Length L = 87 m
Cosine φ = 0.8.
According to the above table, the voltage drop coefficient for 100 metres and per amp is equal to 0.0028V/100m/A.

0.0028 x 0.87 x 1530 = 3.72 V
For a voltage = 400 V, in percentages:
3.72 / 400 = 0.0093 that is to say 0.9 %.

7 - Protecting against busbar trunking overloads

To allow for extensions, the busbar trunking is generally protected at its nominal current Inc (or its allowable current Iz if the ambient temperature coefficient k1 is applied).
■ Circuit breaker protection:
□ adjust Ir of the circuit breaker such that:
Iz = Ib x k1 ⩽ Ir ⩽ Inc

Circuit breaker protection allows the Canalis busbar trunking to be used at full capacity because the standardised nominal current In of the circuit breaker is In ⩽ Inc / K2 where K2 = 1.

■ Protection using gG (gI) fuse:
□ determine the standardised nominal current In of the fuse such that: In ⩽ Inc / K2
□ where K2 = 1.1
□ choose the standardised rating In that is equal to or just lower.
Check the following condition: In ⩾ Ib x k1 = Iz.
If this condition is not met, choose the busbar trunking with the next rating up.

Note: using gI fuses for protection means reducing the busbar trunking's allowable current.

8 - Checking the rating and choice of circuit breaker with respect to short-circuit withstand current

Short-circuit current withstand is shown in the table below.
This value must be greater than the prospective short-circuit current, at all points of the installation.
■ Calculate the short-circuit current value at the worst case points.
■ Check the chosen rating allows the busbar trunking to cope with this short-circuit current.
■ If this is not the case, there are 2 possible solutions:
■ choose a higher rating busbar trunking and re-check
■ provide a peak current limiting protection system upstream of the busbar trunking.

Warning: regarding the TNS or TNC earthing system, based on the value of L-PE fault loop impedance and the level of L-PE short-circuit, choose the correct coordination between the protection and the busbar trunking.

Canalis KT is more than sized to cope with short-circuit currents.
Some specific cases require checks to be carried out: transformers in parallel, low rating Canalis installed close to a transformer, etc.

Protection of circuits supplied by several paralleled transformers

Canalis KTC

9 - Choosing source and feeder circuit breakers according to the number and rating of the supply transformers

The choice of a circuit breaker to protect a circuit depends mainly on the following 2 criteria:
■ the nominal current of the source or the loads, which determines the appropriate rating of the device,
■ the maximum short-circuit current at the point in question, which determines the minimum breaking capacity of the device.

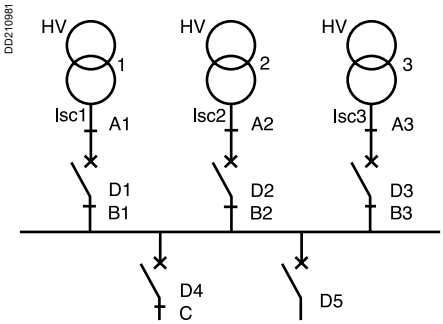

For the case of several parallel transformers [(1)]:
■ the source circuit breaker D1 must have a breaking capacity greater than the largest of the 2 following values:
□ either Isc1 (short-circuit at B1)
□ or Isc2 + Isc3 (short-circuit at A1)
■ the feeder circuit breaker D4 must have a breaking capacity greater than Isc1 + Isc2 + Isc3.

The table allows the following to be determined:
■ the source circuit breaker, according to the number and rating of the supply transformers (in the case of a single transformer, the table recommends a fixed circuit breaker; in the case of several transformers, the table shows a drawout circuit breaker and a fixed circuit breaker)
■ the feeder circuit breaker, according to the sources and the nominal current rating of the feeder (the circuit breakers shown in the table can be replaced by limiter circuit breakers if the cascading technique is to be used with other circuit breakers downstream of the feeder).

(1) To couple several transformers in parallel, the transformers must have the same Usc, the same transformation ratio, the same coupling and the ratio of the power rating of the 2 transformers must be less than or equal to 2.

Example:
3 incoming 1250 kVA transformers 20 kV/410 V (In = 1760 A).
Feeders: including one 2000 A feeder, one 1600 A feeder and one 1000 A feeder.
What circuit breakers should be fitted at the incomer and for the feeders?
■ Incomer circuit breakers:
either the Drawout Masterpact NW20N1 or the Drawout NS2000N circuit breakers can be chosen. The choice will depend on the options required.
■ Feeder circuit breakers:
the NW20H2 for the 2000 A feeder, the NW16H2 for the 1600 A feeder and the NW10H2 for the 1000 A feeder are to be chosen.
These circuit breakers have the advantage of providing discrimination (full discrimination) with the NW12H1 or NS1250N circuit breakers.

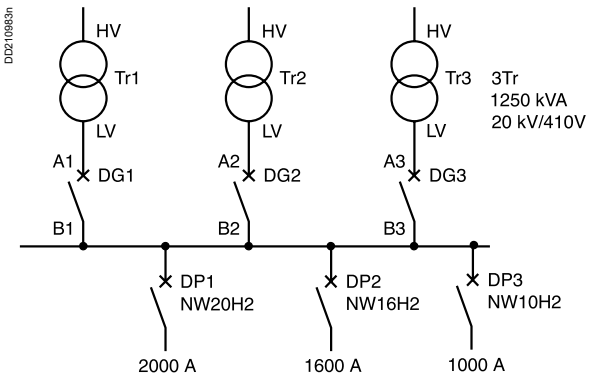

Protection of circuits supplied by several paralleled transformers

Calculation assumption:
- the **upstream network short-circuit power is not defined**
- the transformers are 20 kV / 410 V
- between each transformer and corresponding circuit breaker there is 5 metres of KT busbar trunking
- between a source circuit breaker and a feeder circuit breaker there is 1 metre of bars
- the equipment is installed into a switchboard with an ambient temperature of 40°C.

Transformer				Source min. break. cap. (kA)	Source circuit breaker	Feeder min. break. cap. (kA)	Feeder circuit breaker				
P (kVA)	In (A)	Usc (%)	Isc (kA)				≤ 100 A	160 A	250 A	400 A	630 A
1 transformer											
50	70	4	2	2	NSX100N TM-D/STR22SE	2	NSX100N				
100	141	4	4	4	NSX160N TM-D/STR22SE	4	NSX100N	NSX160N			
160	225	4	6	6	NSX250N TM-D/STR22SE	6	NSX100N	NSX160N	NSX250N		
250	352	4	9	9	NSX400N STR23SE/53UE	9	NSX100N	NSX160N	NSX250N	NSX400N	
400	563	4	14	14	NSX630N STR23SE/53UE	14	NSX100N	NSX160N	NSX250N	NSX400N	NSX630N
630	887	4	22	22	NS1000N NT10H1 NW10N1 Micrologic	22	NSX100N	NSX160N	NSX250N	NSX400N	NSX630N
800	1127	6	19	19	NS1250N NT12H1 NW12N1 Micrologic	19	NSX100N	NSX160N	NSX250N	NSX400N	NSX630N
1000	1408	6	23	23	NS1600N NT16H1 NW16N1 Micrologic	23	NSX100N	NSX160N	NSX250N	NSX400N	NSX630N
1250	1760	6	29	29	NW20N1 Micrologic	29	NSX100H	NSX160N	NSX250N	NSX400N	NSX630N
1600	2253	6	38	38	NW25H1 Micrologic	38	NSX100H	NSX160H	NSX250H	NSX400N	NSX630N
2000	2816	6	47	47	NW32H1 Micrologic	47	NSX100H	NSX160H	NSX250H	NSX400H	NSX630H
2500	3521	6	59	59	NW40H1 Micrologic	59	NSX100H	NSX160H	NSX250H	NSX400H	NSX630H
2 transformers											
50	70	4	2	2	NSX100N TM-D/STR22SE	4	NSX100N	NSX160N			
100	141	4	4	4	NSX160N TM-D/STR22SE	7	NSX100N	NSX160N	NSX250N		
160	225	4	6	6	NSX250N TM-D/STR22SE	11	NSX100N	NSX160N	NSX250N	NSX400N	
250	352	4	9	9	NSX400N STR23SE/53UE	18	NSX100N	NSX160N	NSX250N	NSX400N	NSX630N
400	563	4	14	14	NSX630N STR23SE/53UE	28	NSX100H	NSX160N	NSX250N	NSX400N	NSX630N
630	887	4	22	22	NS1000N NT10H1 NW10N1 Micrologic	44	NSX100H	NSX160H	NSX250H	NSX400N	NSX630N
800	1127	6	19	19	NS1250N NT12H1 NW12N1 Micrologic	38	NSX100H	NSX160H	NSX250H	NSX400N	NSX630N
1000	1408	6	23	23	NS1600N NT16H1 NW16N1 Micrologic	47	NSX100H	NSX160H	NSX250H	NSX400H	NSX630H
1250	1760	6	29	29	NW20N1 Micrologic	59	NSX100H	NSX160H	NSX250H	NSX400H	NSX630H
1600	2253	6	38	38	NW25H1 Micrologic	75	NSX100L	NSX160L	NSX250L	NSX400L	NSX630L
2000	2816	6	47	47	NW32H1 Micrologic	94	NSX100L	NSX160L	NSX250L	NSX400L	NSX630L
2500	3521	6	59	59	NW40H1 Micrologic	117	NSX100L	NSX160L	NSX250L	NSX400L	NSX630L
3 transformers											
50	70	4	2	4	NSX100N TM-D/STR22SE	5	NSX100N	NSX160N	NSX250N		
100	141	4	4	7	NSX160N TM-D/STR22SE	11	NSX100N	NSX160N	NSX250N	NSX400N	
160	225	4	6	11	NSX250N TM-D/STR22SE	17	NSX100N	NSX160N	NSX250N	NSX400N	NSX630N
250	352	4	9	18	NSX400N STR23SE/53UE	26	NSX100H	NSX160N	NSX250N	NSX400N	NSX630N
400	563	4	14	28	NSX630N STR23SE/53UE	42	NSX100H	NSX160H	NSX250H	NSX400N	NSX630N
630	887	4	22	44	NS1000N NT10L1 NW10H1 Micrologic	67	NSX100H	NSX160H	NSX250H	NSX400H	NSX630H
800	1127	6	19	38	NS1250N NT12H1 NW12N1 Micrologic	56	NSX100H	NSX160H	NSX250H	NSX400H	NSX630H
1000	1408	6	23	47	NS1600N NW16H1 Micrologic	70	NSX100H	NSX160H	NSX250H	NSX400H	NSX630H
1250	1760	6	29	59	NS2000N NW20N1 Micrologic	88	NSX100L	NSX160L	NSX250L	NSX400L	NSX630L
1600	2253	6	38	75	NS2500N NW25H2 Micrologic	113	NSX100L	NSX160L	NSX250L	NSX400L	NSX630L
2000	2816	6	47	94	NS3200N NW32H2 Micrologic	141	NSX100L	NSX160L	NSX250L	NSX400L	NSX630L

Usc values as defined in HD 428.

Canalis KTC

Introduction

System performance is guaranteed by coordination between the Schneider Electric circuit breaker protection and the distribution spread over the Canalis busbar trunking.

Fully coordinated distributed electrical distribution perfectly meets the requirements of safety, service continuity, system changes and simplicity.

In the following pages, we will explain the advantages of the Schneider Electric system and Schneider Electric circuit breaker protection, as well as the selection guide tables for coordination between the Schneider Electric circuit breakers and the Canalis busbar trunking.

The use of Schneider Electric circuit breakers provides:
■ protection against overloads and short-circuits
■ coordination between the protective devices and the Canalis busbar trunking:
□ full discrimination from 1 to 6300 A between all the circuit breakers of the Schneider Electric ranges
□ cascading:
- reinforcement of the small and medium power busbar trunking short-circuit protective devices. This enables all short-circuit levels to be covered
- protection of tap-offs using standard circuit breakers: this is achieved whatever the position of the tap-off unit on the Canalis busbar trunking
■ the use of standard circuit breakers makes for simpler design whilst respecting a high level of dependability
■ fault location is quick and easy
■ resetting is easy once the fault has been cleared by the site operator.

Adequacy between circuit breaker ratings and busbar trunking

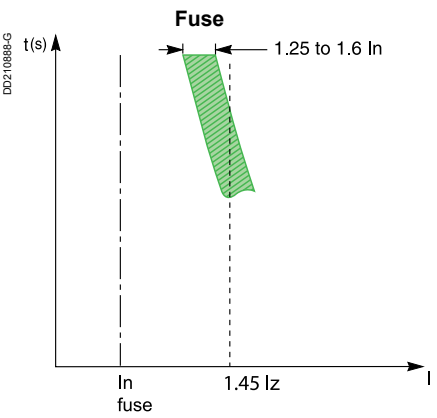

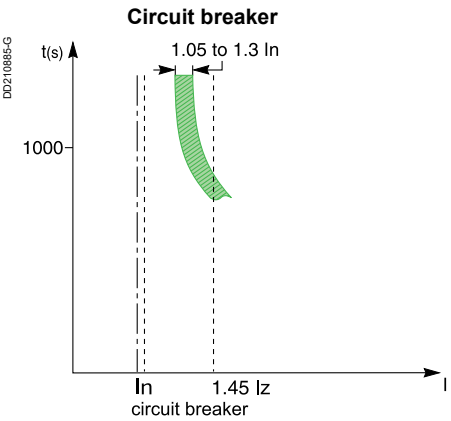

In order to take into consideration thermal overload protection of busbar trunking, the different technologies of the protection switchgear and the maximum overload operating currents must be considered.

By design, the thermal adjustment of a circuit breaker is more accurate.

■ Iz = Ib x k1 x k2
□ Ib : current rating
□ Iz : allowable busbar trunking current
□ k1 : temperature derating coefficient
□ k2 : derating coefficient linked to the type of switchgear:
- fuse k2 = 1.1
- circuit breaker k2 = 1.
■ Iz = Ib x k1.
■ In = I standardised fuse or circuit breaker.

Example:
For a current rating Ib = 1900 A in an ambient temperature of 35°C:
■ fuse protection:
Iz = Ib x k1 x k2 = 1900 x 1 x 1.1 = 2090 A
The correct choice of busbar trunking is the KTC2500 (Iz = 2500 A),
■ circuit breaker protection:
Iz = Ib x k1 x k2 = 1900 x 1 x 1 = 1900 A
The correct choice of busbar trunking is the KTC2000 (Iz = 2000 A),
A difference of 20 % in the measurement of operating currents results in an over-rating of the busbar trunking of 10 % if it is protected by fuses.

Explanations
■ Calibration of thermal asymptotes:
□ the distribution fuse is calibrated to operate for overloads of between 1.25 and 1.6 times its nominal current (In fuse)
□ the circuit breaker is calibrated to operate for overloads of between 1.05 and 1.3 times (1.2 for circuit breakers with electronic protection) its setting current (Ir which is a function of circuit breaker In).
■ Maximum operating current:
□ the maximum limit for this current is set by installation standards (IEC 364, NFC 15-100, etc) at 1.45 times the allowable current of the busbar trunking.

Thermal setting accuracy

■ A fuse is for a fixed rating, a change in the current to be protected requires a change of fuse.
The spacing between 2 fuse ratings is around 25 %.
The typical ratings are conform to the numbers of the "Renard" series.

Example: 40 - 50 - 63 - 80 - 100 - 125 - 160 - 200 - etc.
■ The circuit breaker provides the possibility of fine adjustment:
□ 5 % for circuit breakers fitted with standard thermal-magnetic trip units
□ 3 % for circuit breakers fitted with electronic trip units.
A circuit breaker with a nominal rating of 100 A can be easily set to the following values:
Ir = 100 A, 95 A, 90 A, 85 A, 80 A.

Example:
A circuit breaker with a nominal rating of 1600 A set at 1344 A would be used to protect a KTC1600 (Inc = 1344 A) busbar trunking used in an ambient temperature of 50°C (k1 = 0.84).

Setting range of circuit breakers fitted with electronic trip units

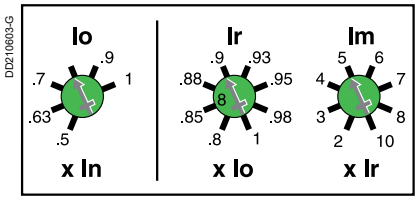

Example of setting possibilities.

Circuit breakers fitted with electronic trip units have the following setting ranges:
■ thermal protection Ir adjustable from 0.4 In to In
■ short-circuit protection adjustable from 2 Ir to 10 Ir.

Example:
A 250 A circuit breaker (NS250N fitted with an STR22SE) can easily have the following settings:
■ thermal protection from 100 to 250 A
■ short-circuit protection from 200 to 2500 A.

Advantages
This provides great flexibility for:
■ modifications (flexibility), extensions (installation changes): the protective devices easily adapt to the load to be protected and to the earthing system (protection of personnel and equipment)
■ maintenance, the use of this type of device considerably reduces the stocks of maintenance components.

Canalis KTC

Busbar trunking characteristics

The busbar trunking must meet all of the rules detailed in IEC 61439-1 and IEC 61439-6.
The sizing of busbar trunking for short-circuits is determined by the following characteristics:
■ the allowable rated peak current Ipk (kÂ).
This characteristic represents the busbar trunking's instantaneous electrodynamic withstand limits. The peak current value is often the most restrictive instantaneous characteristic for the protective device
■ The maximum short-time withstand rms current Icw (kArms/s).
This characteristic represents the allowable temperature rise limit of the conductors during a given time period (0.1 to 1s)
■ The thermal stress in A^2s.
This characteristic represents the instantaneous thermal stress withstand of the busbar trunking. In general, if the short-circuit generates fault conditions compatible with the first two characteristics, this constraint is "automatically satisfied".

Circuit breaker characteristics

The circuit breaker must satisfy the requirements of product construction standards (IEC 60947-2, etc) and installation standards (IEC 60364 or those in force in the country concerned), i.e. have a breaking capacity Icu (1) greater than the prospective short-circuit current Isc at the point where it is installed.

(1) Installation standard IEC 60364 and construction standards specify the breaking capacity of a circuit breaker as being:
- the ultimate breaking capacity, Icu, if it is not coordinated with an upstream protective device,
- the reinforced breaking capacity (cascading) if there is coordination with the upstream protective device.

Circuit breaker / busbar trunking system characteristics

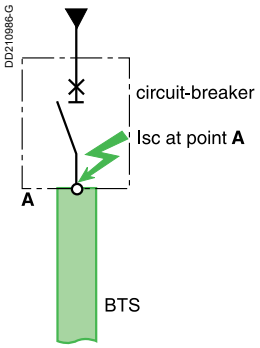

When the busbar trunking is directly protected, the circuit breaker must be chosen as follows:
■ Icu of the circuit breaker ⩾ prospective Isc at point A
■ I peak of the busbar trunking ⩾ prospective asymmetrical or limited Isc at point A
■ busbar trunking thermal withstand Icw ⩾ thermal stress through the busbar trunking.

When the busbar trunking is protected downstream of a cable, the circuit breaker must be chosen as follows:
■ Icu of the circuit breaker ⩾ prospective Isc at point A
■ I peak of the busbar trunking ⩾ prospective asymmetrical or limited Isc at point B
■ busbar trunking thermal withstand Icw ⩾ thermal stress through the busbar trunking.

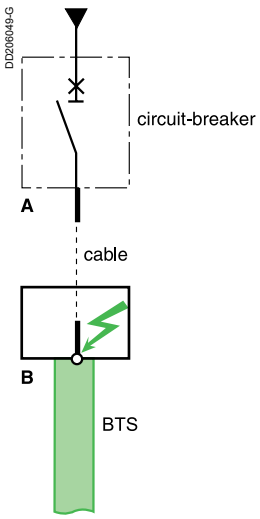

Circuit breaker/busbar trunking coordination

Non-limiting or time-delayed circuit breaker

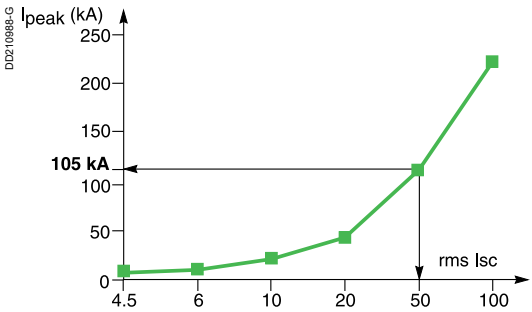

Current value of the 1st peak as a function of Isc rms.

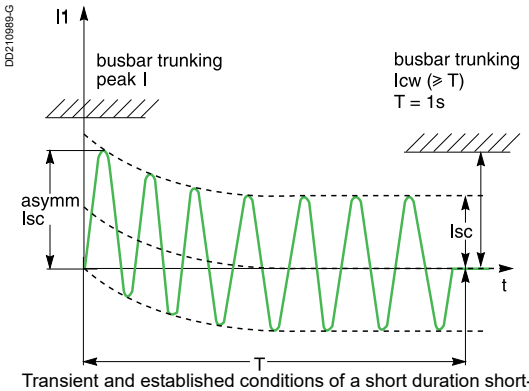

Transient and established conditions of a short duration short-circuit.

This is applicable for non-limiting circuit breakers (instantaneous or time-delayed) and time-delayed limiting circuit breakers.
These are mainly air circuit breakers (≥ 800 A).

This type of circuit breaker is used for time discrimination and is therefore often associated with KT type busbar trunking.

It must be checked that the busbar trunking can handle the peak fault current to which it may be subjected and the thermal withstand during any time delay.
The allowable peak current (I peak) of the busbar trunking must be greater than the peak current value of the prospective asymmetrical short-circuit current (Isc asym) at A.
The asymmetrical short-circuit current value is obtained by multiplying the symmetrical short-circuit current value (Isc) by a standardised asymmetrical coefficient (k).
It is the first value of the 1st transient asymmetrical peak of the short-circuit which is taken into account.

Standardised table for calculating asymmetrical short-circuit values

Isc: prospective symmetrical short-circuit value	Asymmetrical coefficient
kA (rms value)	**k**
4,5 ≤ I ≤ 6	1.5
6 < I ≤ 10	1.7
10 < I ≤ 20	2.0
20 < I ≤ 50	2.1
50 < I	2.2

Example:
For a circuit with a prospective short-circuit current of 50 kA rms, the 1st peak reaches 105 kÂ (50 kA x 2.1), see figure opposite.

The short-time withstand value (Icw) of the busbar trunking must be greater than the current flowing through the installation during the duration of the short-circuit (Isc) (duration T - total breaking time - including any time delay).

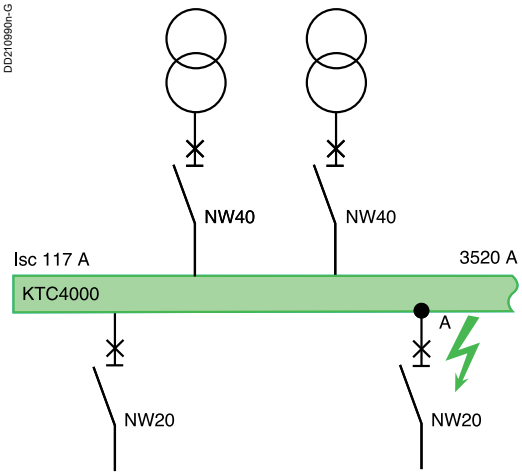

At point A, the prospective short-circuit current is 117 kArms.
To meet this constraint, a reinforced KTC4000 is needed because:
Icw KTC4000 > Isc prospective at point A.

The Icw or Ipk values of standard or reinforced KTC trunking allow the easy construction of circuits with time discrimination, even with high short-circuit values.

Circuit breaker/busbar trunking coordination
Limiter circuit breaker

Canalis KTC

This is mainly applicable to the protection of busbar trunking using moulded case circuit breakers (≤ 1600 A).
This type of circuit breaker is used for energy discrimination and is therefore often associated with Canalis KTC.

Here, it has to be checked that the busbar trunking can cope with the peak current (Ipk) limited by the protective device and the corresponding thermal stress (A²s):
■ the peak current (I peak), once limited by the circuit breaker, must be less than the allowable peak current value of the busbar trunking
■ the thermal stress, once limited by the circuit breaker, must be less than the allowable thermal stress of the busbar trunking.

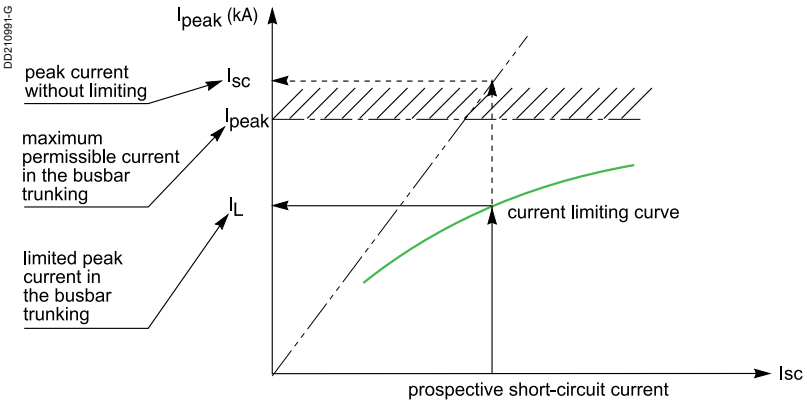

Checking peak I withstand of the busbar trunking.

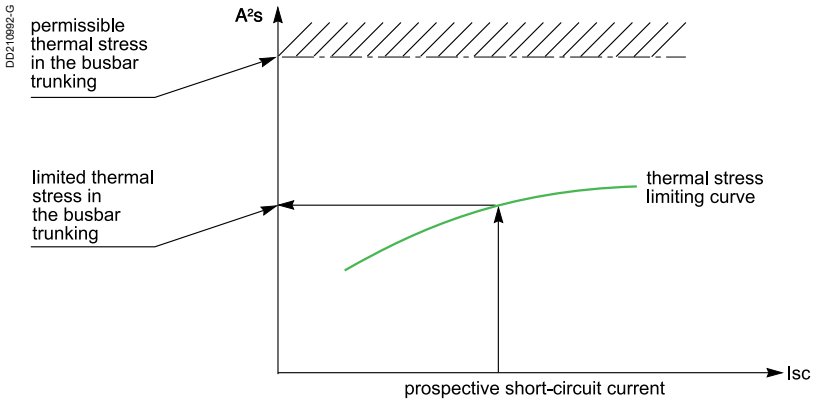

Checking A²s withstand of the busbar trunking.

Protecting busbar trunking with a Compact NS circuit breaker

Limiting capacity

Compact NS circuit breakers are high current limiting circuit breakers.
The limiting capacity of a circuit breaker is its capacity to only allow a limited current (IL) to flow in the event of a short-circuit. This limited current being less than the prospective asymmetrical peak short-circuit current (Isc).
This greatly reduces the electrodynamic and thermal constraints on the installation to be protected.

Applying limiting capacity to busbar trunking protection

Even if this combination is less frequent than for KS busbar trunking, some KT ratings can benefit from the association with a limiter circuit breaker.

High power installation
If the circuit breaker's limiting capacity is not taken into account:
- the prospective short-circuit current value (Isc) at point A would be 121 kÂ
- KTC1600 would be the appropriate choice of busbar trunking.

If the limiting capacity of the Compact NS1000L is taken into account, the limited Ipk is 50 kÂ < 110 kÂ of the KTC1000 busbar trunking.

Because of the high limiting capacity of the Compact NS1000L, a KTC1000 busbar trunking can be installed into a prospective short-circuit current at point A of 150 kA rms or 300 kÂ.

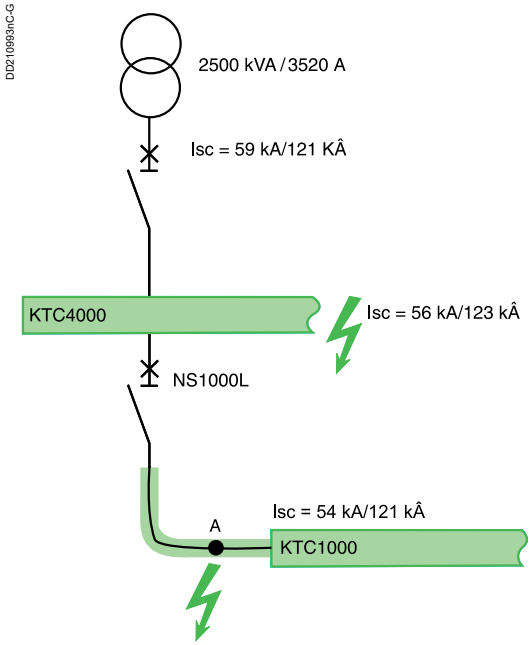

Canalis KTC

The selection guide below will, according to the prospective short-circuit current of the installation, allow you to determine the type of circuit breaker needed to fully protect the busbar trunking.

Example: for an installation with a prospective Isc of 150 kA, the circuit breaker needed to protect a KTC1350 A busbar trunking is a **NS1000L** or **NT10L1** (the rating depends on the circuit's nominal current).

For a voltage of 380 / 415 V

Type of Canalis busbar trunking		KTC1000					
	Isc max kArms	**42 kA**	**50 kA**	**65 kA**	**85 kA**	**100 kA**	**150 kA**
Type of circuit breaker	Compact NS		NS800N **NS1000N** NS1250N				NS800L **NS1000L**
	Masterpact MTZ1	MTZ1 08 H1/H2/H3/L1 **MTZ1 10 H1/H2/H3/L1** MTZ1 12 H1/H2/H3	MTZ1 08 H2/H3/L1 **MTZ1 10 H2/H3/L1** MTZ1 12 H2/H3	MTZ1 08 L1 **MTZ1 10 L1**			
	Masterpact MTZ2	MTZ2 08 N1/H1/H2/L1 **MTZ2 10 N1/H1/H2/L1** MTZ2 12 N1/H1/H2/L1	MTZ2 08 H1/H2/L1 **MTZ2 10 H1/H2/L1** MTZ2 12 H1/H2/L1				
	Masterpact NT	NT08H1 **NT10H1** NT12H1	NT08H2 **NT10H2** NT12H2				NT08L1 **NT10L1**
	Masterpact NW	NW08N1 **NW10N1** NW12N1	NW08H1 **NW10H1** NW12H1				

Type of Canalis busbar trunking		KTC1000 Reinforced short-circuit level					
	Isc max kArms	**42 kA**	**50 kA**	**65 kA**	**85 kA**	**100 kA**	**150 kA**
Type of circuit breaker	Compact NS		NS800N **NS1000N**	NS800H **NS1000H** NS1250H			NS800L **NS1000L**
	Masterpact MTZ1	MTZ1 08 H1/H2/H3/L1 **MTZ1 10 H1/H2/H3/L1** MTZ1 12 H1/H2/H3	MTZ1 08 H2/H3/L1 **MTZ1 10 H2/H3/L1** MTZ1 12 H2/H3	MTZ1 08 H3/L1 **MTZ1 10 H3/L1** MTZ1 12 H3	MTZ1 08 L1 **MTZ1 10 L1**		
	Masterpact MTZ2	MTZ2 08 N1/H1/H2/L1 **MTZ2 10 N1/H1/H2/L1** MTZ2 12 N1/H1/H2/L1	MTZ2 08 H1/H2/L1 **MTZ2 10 H1/H2/L1** MTZ2 12 H1/H2/L1		MTZ2 08 L1 **MTZ2 10 L1** MTZ2 12 L1		
	Masterpact NT	NT08H1 **NT10H1** NT12H1	NT08H2 **NT10H2** NT12H2				NT08L1 **NT10L1**
	Masterpact NW	NW08N1 **NW10N1** NW12N1		NW08H1 **NW10H1** NW12H1	NW08L1 **NW10L1** NW12L1		

Type of Canalis busbar trunking		KTC1350					
	Isc max kArms	**42 kA**	**50 kA**	**65 kA**	**85 kA**	**100 kA**	**150 kA**
Type of circuit breaker	Compact NS		NS1000N **NS1250N** **NS1600N**				**NS1000L**
	Masterpact MTZ1	MTZ1 10 H1/H2/H3/L1 **MTZ1 12 H1/H2/H3** MTZ1 16 H1/H2/H3	MTZ1 10 H2/H3/L1 **MTZ1 12 H2/H3** MTZ1 16 H2/H3	MTZ1 10 L1			
	Masterpact MTZ2	MTZ2 10 N1/H1/H2/L1 MTZ2 12 N1/H1/H2/L1 MTZ2 16 N1/H1/H2/L1	MTZ2 10 H1/H2/L1 MTZ2 12 H1/H2/L1 MTZ2 16 H1/H2/L1				
	Masterpact NT	NT10H1 **NT12H1** **NT16H1**	NT10H2 **NT12H2** **NT16H2**				**NT10L1**
	Masterpact NW	NW10N1 **NW12N1** **NW16N1**	NW10H1 **NW12H1** **NW16H1**				

Type of Canalis busbar trunking		KTC1350 Reinforced short-circuit level					
	Isc max kArms	**42 kA**	**50 kA**	**65 kA**	**85 kA**	**100 kA**	**150 kA**
Type of circuit breaker	Compact NS		NS1000N **NS1250N** **NS1600N**	NS1000H **NS1250H** **NS1600H**			NS1000L
	Masterpact MTZ1	MTZ1 10 H1/H2/H3/L1 **MTZ1 12 H1/H2/H3** MTZ1 16 H1/H2/H3	MTZ1 10 H2/H3/L1 **MTZ1 12 H2/H3** MTZ1 16 H2/H3	MTZ1 10 H3/L1 **MTZ1 12 H3** MTZ1 16 H3	MTZ1 10 L1		
	Masterpact MTZ2	MTZ2 10 N1/H1/H2/L1 MTZ2 12 N1/H1/H2/L1 MTZ2 16 N1/H1/H2/L1	MTZ2 10 H1/H2/L1 MTZ2 12 H1/H2/L1 MTZ2 16 H1/H2/L1		MTZ2 10 L1 **MTZ2 12 L1** **MTZ2 16 L1**		
	Masterpact NT	NT10H1 NT12H1 NT16H1	NT10H2 NT12H2 NT16H2				NT10L1
	Masterpact NW	NW10N1 **NW12N1** **NW16N1**		NW10H1 **NW12H1** **NW16H1**	NW10L1 **NW12L1** **NW16L1**		

Type of Canalis busbar trunking	KTC1600					
Isc max kArms	42 kA	50 kA	65 kA	85 kA	100 kA	150 kA
Type of circuit breaker Compact NS		NS1250N **NS1600N**	NS1250H **NS1600H** **NS1600bN** NS2000N			
Masterpact MTZ1	**MTZ1 12 H1/H2/H3** MTZ1 16 H1/H2/H3	**MTZ1 12 H2/H3** MTZ1 16 H2/H3	**MTZ1 12 H3** MTZ1 16 H3			
Masterpact MTZ2	MTZ2 12 N1/H1/H2/L1 MTZ2 16 N1/H1/H2/L1 MTZ2 20 N1/H1/H2/H3/L1	MTZ2 12 H1/H2/L1 MTZ2 16 H1/H2/L1 MTZ2 20 H1/H2/H3/L1		MTZ2 12 L1 **MTZ2 16 L1** MTZ2 20 L1		
Masterpact NT	**NT12H1** NT16H1	**NT12H2** NT16H2				
Masterpact NW	NW12N1 **NW16N1** NW20H1		NW12H1 **NW16H1** NW20H1		NW12L1 **NW16L1** NW20L1	

Type of Canalis busbar trunking	KTC1600 Reinforced short-circuit level					
Isc max kArms	42 kA	50 kA	65 kA	85 kA	100 kA	150 kA
Type of circuit breaker Compact NS		NS1250N	NS1250H NS1600H **NS1600bN** NS2000N	**NS1600bH** NS2000H		
Masterpact MTZ1	**MTZ1 12 H1/H2/H3** MTZ1 16 H1/H2/H3	**MTZ1 12 H2/H3** MTZ1 16 H2/H3	**MTZ1 12 H3** MTZ1 16 H3			
Masterpact MTZ2	MTZ2 12 N1/H1/H2/L1 MTZ2 16 N1/H1/H2/L1 MTZ2 20 N1/H1/H2/H3/L1	MTZ2 12 H1/H2/L1 MTZ2 16 H1/H2/L1 MTZ2 20 H1/H2/H3/L1		MTZ2 12 H2/L1 MTZ2 16 H2/L1 MTZ2 20 H2/H3/L1	MTZ2 12 L1 **MTZ2 16 L1** MTZ2 20 L1	
Masterpact NT	NT12H1 **NT16H1**	NT12H2 **NT16H2**				
Masterpact NW	NW12N1 **NW16N1**		NW12H1 **NW16H1** NW20H1	NW12H2 **NW16H2** NW20H2		NW12L1 **NW16L1** NW20L1

Type of Canalis busbar trunking	KTC2000					
Isc max kArms	42 kA	50 kA	65 kA	85 kA	100 kA	150 kA
Type of circuit breaker Compact NS			NS1600bN **NS2000N**			
Masterpact MTZ1	MTZ1 16 H1/H2/H3	MTZ1 16 H2/H3	MTZ1 16 H3			
Masterpact MTZ2	MTZ2 16 N1/H1/H2/L1 MTZ2 20 N1/H1/H2/H3/L1 MTZ2 25 H1/H2/H3	MTZ2 16 H1/H2/L1 MTZ2 20 H1/H2/H3/L1		MTZ2 16 L1 **MTZ2 20 L1**		
Masterpact NT	NT16H1	NT16H2				
Masterpact NW	NW16N1 **NW20H1** NW25H1		NW16H1 **NW20H1** NW25H1		NW 16 L1 **NW20L1**	

Type of Canalis busbar trunking	KTC2000 Reinforced short-circuit level					
Isc max kArms	42 kA	50 kA	65 kA	85 kA	100 kA	150 kA
Type of circuit breaker Compact NS			NS1600bN **NS2000N**	NS1600bH **NS2000H**		
Masterpact MTZ1	MTZ1 16 H1/H2/H3	MTZ1 16 H2/H3	MTZ1 16 H3			
Masterpact MTZ2	MTZ2 16 N1/H1/H2/L1 **MTZ2 20 N1/H1/H2/H3/L1** MTZ2 25 H1/H2/H3	MTZ2 16 H1/H2/L1 **MTZ2 20 H1/H2/H3/L1**		MTZ2 16 H2/L1 **MTZ2 20 H2/H3/L1** MTZ2 25 H2/H3		MTZ2 16 L1 **MTZ2 20 L1**
Masterpact NT	NT16H1	NT16H2				
Masterpact NW	NW16N1 **NW20H1** NW25H1		NW16H1 **NW20H1** NW25H1		NW16H2 **NW20H2** NW25H2	NW16L1 **NW20L1**

Type of Canalis busbar trunking	KTC2500					
Isc max kArms	42 kA	50 kA	65 kA	80 kA	100 kA	150 kA
Type of circuit breaker Masterpact MTZ2	MTZ2 20 H1/H2/H3/L1 **MTZ2 25 H1/H2/H3** MTZ2 32 H1/H2/H3			MTZ2 20 H2/H3/L1 **MTZ2 25 H2/H3** MTZ2 32 H2/H3	MTZ2 20 L1	
Masterpact NW			NW20H1 **NW25H1** NW32H1	NW20H2 **NW25H2** NW32H2	NW20L1	NW20L1

Type of Canalis busbar trunking	KTC2500 Reinforced short-circuit level					
Isc max kArms	42 kA	50 kA	65 kA	80 kA	100 kA	110 kA
Type of circuit breaker Masterpact MTZ2	MTZ2 20 H1/H2/H3/L1 **MTZ2 25 H1/H2/H3** MTZ2 32 H1/H2/H3			MTZ2 20 H2/H3/L1 **MTZ2 25 H2/H3** MTZ2 32 H2/H3		MTZ2 20 H3/L1[(1)] **MTZ2 25 H3** MTZ2 32 H3
Masterpact NW			NW20H1 **NW25H1** NW32H1		NW20H2 **NW25H2** NW32H2	NW20L1 (150 kA) **NW25H3** NW32H3

(1) L1 up to 150 kA.

Canalis KTC

Type of Canalis busbar trunking		KTC3200					
	Isc max kArms	42 kA	50 kA	65 kA	85 kA	100 kA	110 kA
Type of circuit breaker	Masterpact MTZ2	MTZ2 25 H1/H2/H3 **MTZ2 32 H1/H2/H3** MTZ2 40 H1/H2/H3			MTZ2 25 H2/H3 **MTZ2 32 H2/H3** MTZ2 40 H2/H3		
	Masterpact MTZ3	MTZ3 40 H1/H2					
	Masterpact NW			NW25H1 **NW32H1** NW40H1	NW25H2 **NW32H2** NW40H2 NW40bH1		

Type of Canalis busbar trunking		KTC3200 Reinforced short-circuit level					
	Isc max kArms	42 kA	50 kA	65 kA	85 kA	100 kA	110 kA
Type of circuit breaker	Masterpact MTZ2	MTZ2 25 H1/H2/H3 **MTZ2 32 H1/H2/H3** MTZ2 40 H1/H2/H3			MTZ2 25 H2/H3 **MTZ2 32 H2/H3** MTZ2 40 H2/H3		MTZ2 25 H3 **MTZ2 32 H3** MTZ2 40 H3
	Masterpact MTZ3	MTZ3 40 H1/H2					MTZ3 40 H2
	Masterpact NW			NW25H1 **NW32H1** NW40H1		NW25H2 **NW32H2** NW40H2 NW40bH1	**NW32H3** NW40H3 NW40bH2

Type of Canalis busbar trunking		KTC4000					
	Isc max kArms	42 kA	50 kA	65 kA	90 kA	100 kA	110 kA
Type of circuit breaker	Masterpact MTZ2	MTZ2 32 H1/H2/H3 **MTZ2 40 H1/H2/H3**			MTZ2 32 H2/H3 **MTZ2 40 H2/H3**		
	Masterpact MTZ3	MTZ3 40 H1/H2 MTZ3 50 H1/H2					
	Masterpact NW			NW32H1 **NW40H1** NW40bH1 NW50H1	NW32H2 **NW40H2** NW40bH1 NW50H1		

Type of Canalis busbar trunking		KTC4000 Reinforced short-circuit level					
	Isc max kArms	42 kA	50 kA	65 kA	90 kA	100 kA	120 kA
Type of circuit breaker	Masterpact MTZ2	MTZ2 32 H1/H2/H3 **MTZ2 40 H1/H2/H3**			MTZ2 32 H2/H3 **MTZ2 40 H2/H3**		MTZ2 32 H3 **MTZ2 40 H3**
	Masterpact MTZ3	MTZ3 40 H1/H2 MTZ3 50 H1/H2					MTZ3 40 H2 MTZ3 50 H2
	Masterpact NW			NW32H1 **NW40H1** NW40bH1 NW50H1		NW32H2 **NW40H2** NW40bH1 NW50H1	NW32H3 **NW40H3** NW40bH2 NW50H2

Type of Canalis busbar trunking		KTC5000					
	Isc max kArms	42 kA	50 kA	65 kA	95 kA	100 kA	110 kA
Type of circuit breaker	Masterpact MTZ2	MTZ2 32 H1/H2/H3 MTZ2 40 H1/H2/H3			MTZ2 32 H2/H3 MTZ2 40 H2/H3		
	Masterpact MTZ3	MTZ3 40 H1/H2 **MTZ3 50 H1/H2** MTZ3 63 H1/H2					
	Masterpact NW			NW40H1	NW40H2 NW40bH1 **NW50H1** NW63H1		

Type of Canalis busbar trunking		KTC5000 Reinforced short-circuit level					
	Isc max kArms	42 kA	50 kA	65 kA	90 kA	100 kA	120 kA
Type of circuit breaker	Masterpact MTZ2	MTZ2 32 H1/H2/H3 MTZ2 40 H1/H2/H3			MTZ2 32 H2/H3 MTZ2 40 H2/H3		MTZ2 32 H3 MTZ2 40 H3
	Masterpact MTZ3	MTZ3 40 H1/H2 **MTZ3 50 H1/H2** MTZ3 63 H1/H2					MTZ3 40 H2 **MTZ3 50 H2** MTZ3 63 H2
	Masterpact NW			NW40H1 NW40bH1 **NW50H1** NW63H1		NW40H2 (≤ 95 kA) NW40bH1 (≤ 95 kA) **NW50H1 (≤ 95 kA)** NW63H1 (≤ 95 kA)	NW40H3 NW40bH2 **NW50H2** NW63H2

Type of Canalis busbar trunking		KTC6300 / KTC6300 Reinforced short-circuit level					
	Isc max kArms	42 kA	50 kA	65 kA		100 kA	120 kA
Type of circuit breaker	Masterpact MTZ3		MTZ2 32 H1/H2/H3 MTZ2 40 H1/H2/H3			MTZ2 32 H2/H3 MTZ2 40 H2/H3	MTZ2 32 H3 MTZ2 40 H3
	Masterpact MTZ3		MTZ3 40 H1/H2 MTZ3 50 H1/H2 **MTZ3 63 H1/H2**				MTZ3 40 H2 MTZ3 50 H2 **MTZ3 63 H2**

For a voltage of 660 / 690 V

Type of Canalis busbar trunking	KTC1000						
Isc max kArms	25 kA	30 kA	42 kA	50 kA	65 kA	75 kA	100 kA
Type of circuit breaker Compact NS		NS800N **NS1000N** NS1250N	NS800H **NS1000H** NS1250H			NS800LB	
Masterpact MTZ1	MTZ1 08 H1/H2/L1 **MTZ1 10 H1/H2/L1** MTZ1 12 H1/H2	MTZ1 08 H1/H2 **MTZ1 10 H1/H2**					
Masterpact MTZ2	MTZ2 08 N1/H1/H2/L1 **MTZ2 10 N1/H1/H2/L1** MTZ2 12 N1/H1/H2/L1			MTZ2 08 H1/H2/L1 **MTZ2 10 H1/H2/L1** MTZ2 12 H1/H2/L1			
Masterpact NT			NT08H1/H2 **NT10H1/H2** NT12H1/H2				
Masterpact NW			NW08N1 **NW10N1** NW12N1	NW08H1 **NW10H1** NW12H1			

Type of Canalis busbar trunking	KTC1000 Reinforced short-circuit level						
Isc max kArms	25 kA	30 kA	42 kA	50 kA	65 kA	75 kA	100 kA
Type of circuit breaker Compact NS		NS800N **NS1000N** NS1250N	NS800H **NS1000H** NS1250H			NS800LB	
Masterpact MTZ1	MTZ1 08 H1/H2/L1 **MTZ1 10 H1/H2/L1** MTZ1 12 H1/H2	MTZ1 08 H1/H2 **MTZ1 10 H1/H2**					
Masterpact MTZ2	MTZ2 8 N1/H1/H2/L1 **MTZ2 10 N1/H1/H2/L1** MTZ2 12 N1/H1/H2/L1			MTZ2 8 H1/H2/L1 **MTZ2 10 H1/H2/L1** MTZ2 12 H1/H2/L1		MTZ2 8 H/L1 **MTZ2 10 L1** MTZ2 12 L1	
Masterpact NT			NT08H1/H2 NT10H1/H2 NT12H1/H2				
Masterpact NW			NW08N1 **NW10N1** NW12N1		NW08H1 **NW10H1** NW12H1		

Type of Canalis busbar trunking	KTC1350						
Isc max kArms	25 kA	30 kA	42 kA	50 kA	65 kA	75 kA	100 kA
Type of circuit breaker Compact NS		NS1000N NS1250N NS1600N	NS1000H NS1250H NS1600H	NS1600bN			
Masterpact MTZ1	MTZ1 08 H1/H2/L1 MTZ1 12 H1/H2 MTZ1 16 H1/H2	MTZ1 08 H1/H2					
Masterpact MTZ2	MTZ2 10 N1/H1/H2/L1 MTZ2 12 N1/H1/H2/L1 MTZ2 16 N1/H1/H2/L1			MTZ2 10 H1/H2/L1 MTZ2 12 H1/H2/L1 MTZ2 16 H1/H2/L1			
Masterpact NT			NT10H1/H2 NT12H1/H2 NT16H1/H2				
Masterpact NW			NW10N1 NW12N1 NW16N1	NW10H1 NW12H1 NW16H1			

Type of Canalis busbar trunking	KTC1350 Reinforced short-circuit level						
Isc max kArms	25 kA	30 kA	42 kA	50 kA	65 kA	75 kA	100 kA
Type of circuit breaker Compact NS		NS1000N NS1250N NS1600N	NS1000H NS1250H NS1600H	NS1600bN	NS1600bN		
Masterpact MTZ1	MTZ1 08 H1/H2/L1 **MTZ1 12 H1/H2** MTZ1 16 H1/H2	MTZ1 08 H1/H2					
Masterpact MTZ2	MTZ2 10 N1/H1/H2/L1 **MTZ2 12 N1/H1/H2/L1** MTZ2 16 N1/H1/H2/L1			MTZ2 10 H1/H2/L1 **MTZ2 12 H1/H2/L1** MTZ2 16 H1/H2/L1		MTZ2 10 L1 **MTZ2 12 L1** MTZ2 16 L1	
Masterpact NT			NT10H1/H2 NT12H1/H2 NT16H1/H2				
Masterpact NW			NW10N1 NW12N1 NW16N1	NW10H1 NW12H1 NW16H1	NW10H1 NW12H1 NW16H1	NW10L1 NW12L1 NW16L1	

Canalis KTC

Type of Canalis busbar trunking	KTC1600						
Isc max kArms	25 kA	30 kA	42 kA	50 kA	65 kA	85 kA	100 kA
Type of circuit breaker Compact NS		NS1250N NS1600N	NS1250H NS1600H		NS1600bN NS2000N		
Masterpact MTZ1	MTZ1 12 H1/H2 MTZ1 16 H1/H2						
Masterpact MTZ2	MTZ2 12 N1/H1/H2/L1 **MTZ2 16 N1/H1/H2/L1** MTZ2 20 N1/H1/H2/H3/L1			MTZ2 12 H1/H2/L1 **MTZ2 16 H1/H2/L1** MTZ2 20 H1/H2/H3/L1		MTZ2 12 L1 **MTZ2 16 L1** MTZ2 20 L1	
Masterpact NT			NT12H1/H2 **NT16H1/H2**				
Masterpact NW			NW12N1 **NW16N1**		NW12H1 **NW16H1** NW20H1	NW12L1 (≤ 75 kA) **NW16L1 (≤ 75 kA)** NW20 L1 (≤ 75 kA)	

Type of Canalis busbar trunking	KTC1600 Reinforced short-circuit level						
Isc max kArms	25 kA	30 kA	42 kA	50 kA	65 kA	85 kA	100 kA
Type of circuit breaker Compact NS		NS1250N NS1600N	NS1250H NS1600H		NS1600bN NS2000N		
Masterpact MTZ1	MTZ1 12 H1/H2 MTZ1 16 H1/H2						
Masterpact MTZ2	MTZ2 12 N1/H1/H2/L1 **MTZ2 16 N1/H1/H2/L1** MTZ2 20 N1/H1/H2/H3/L1			MTZ2 12 H1/H2/L1 **MTZ2 16 H1/H2/L1** MTZ2 20 H1/H2/H3/L1		MTZ2 12 H2/L1 MTZ2 16 H2/L1 MTZ2 20 H2/H3/L1	MTZ2 12 L1 **MTZ2 16 L1** MTZ2 20 L1
Masterpact NT			NT12H1/H2 **NT16H1/H2**				
Masterpact NW			NW12N1 **NW16N1**		NW12H1 **NW16H1** NW20H1	NW12H2 (≤ 75 kA) **NW16H2 (≤ 75 kA)** NW20H2 (≤ 75 kA)	NW12L1 **NW16L1** NW20L1

Type of Canalis busbar trunking	KTC2000						
Isc max kArms	25 kA	30 kA	42 kA	50 kA	65 kA	85 kA	100 kA
Type of circuit breaker Compact NS		NS1600N	NS1600H		NS1600bN NS2000N NS2500N		
Masterpact MTZ1	MTZ1 16 H1/H2						
Masterpact MTZ2	MTZ2 16 N1/H1/H2/L1 **MTZ2 20 N1/H1/H2/H3/L1**			MTZ2 16 H1/H2/L1 **MTZ2 20 H1/H2/H3/L1**		MTZ2 16 L1 **MTZ2 20 L1**	
	MTZ2 25 H1/H2/H3						
Masterpact NT			NT16H1/H2				
Masterpact NW			NW16N1		NW16H1 **NW20H1** NW25H1		NW16L1 **NW20L1**

Type of Canalis busbar trunking	KTC2000 Reinforced short-circuit level						
Isc max kArms	25 kA	30 kA	42 kA	50 kA	65 kA	85 kA	100 kA
Type of circuit breaker Compact NS		NS1600N	NS1600H		NS1600bN NS2000N NS2500N		
Masterpact MTZ1	MTZ1 16 H1/H2						
Masterpact MTZ2	MTZ2 16 N1/H1/H2/L1 **MTZ2 20 N1/H1/H2/H3/L1**			MTZ2 16 H1/H2/L1 **MTZ2 20 H1/H2/H3/L1**		MTZ2 16 L1 **MTZ2 20 H2/H3/L1** MTZ2 25 H2/H3	MTZ2 16 L1 **MTZ2 20 H3/L1** MTZ2 25 H3
	MTZ2 25 H1/H2/H3						
Masterpact NT			NT16H1/H2				
Masterpact NW			NW16N1		NW16H1 **NW20H1** NW25H1	NW16H2 (≤ 75 kA) **NW20H2 (≤ 75 kA)** NW25H2 (≤ 75 kA)	NW16L1 **NW20H3** NW25H3

Type of Canalis busbar trunking	KTC2500						
Isc max kArms	25 kA	30 kA	42 kA	50 kA	65 kA	80 kA	100 kA
Type of circuit breaker Compact NS					NS2000N NS2500N NS3200N		
Masterpact MTZ1	MTZ1 16 H1/H2						
Masterpact MTZ2	MTZ2 20 N1/H1/H2/H3/L1			MTZ2 20 H1/H2/H3/L1		MTZ2 20 H2/H3/L1 MTZ2 25 H2/H3 MTZ2 32 H2/H3	MTZ2 20 L1
	MTZ2 25 H1/H2/H3 MTZ2 32 H1/H2/H3						
Masterpact NT			NT16H1/H2				
Masterpact NW					NW20H1 **NW25H1** NW32H1	NW20H2 **NW25H2** NW32H2	NW20L1

Type of Canalis busbar trunking	KTC2500 Reinforced short-circuit level						
Isc max kArms	25 kA	30 kA	42 kA	50 kA	65 kA	85 kA	100 kA
Type of circuit breaker: Compact NS					NS2000N NS2500N NS3200N		
Masterpact MTZ1	MTZ1 16 H1/H2						
Masterpact MTZ2	MTZ2 20 N1/H1/H2/H3/L1			MTZ2 20 H1/H2/H3/L1		MTZ2 20 H2/H3/L1	MTZ2 20 H3/L1
	MTZ2 25 H1/H2/H3 MTZ2 32 H1/H2/H3					MTZ2 25 H2/H3 MTZ2 32 H2/H3	MTZ2 25 H3 MTZ2 32 H3
Masterpact NT			NT16H1/H2				
Masterpact NW					NW20H1 **NW25H1** NW32H1	NW20H2 (≤ 80 kA) **NW25H2 (≤ 80 kA)** NW32H2 (≤ 80 kA)	NW20H3 **NW25H3** NW32H3

Type of Canalis busbar trunking	KTC3200						
Isc max kArms	25 kA	30 kA	42 kA	50 kA	65 kA	85 kA	100 kA
Type of circuit breaker: Compact NS					NS2500N NS3200N		
Masterpact MTZ2	**MTZ2 32 H1/H2/H3** MTZ2 40 H1/H2/H3					**MTZ2 32 H2/H3** MTZ2 40 H2/H3	
Masterpact MTZ3	MTZ3 40 H1/H2						
Masterpact NW					NW25H1 **NW32H1** NW40H1	NW25H2 **NW32H2** NW40H2 NW40b H1/H2	

Type of Canalis busbar trunking	KTC3200 Reinforced short-circuit level						
Isc max kArms	25 kA	30 kA	42 kA	50 kA	65 kA	85 kA	100 kA
Type of circuit breaker: Compact NS					NS2500N NS3200N		
Masterpact MTZ2	**MTZ2 32 H1/H2/H3** MTZ2 40 H1/H2/H3					**MTZ2 32 H2/H3** MTZ2 40 H2/H3	**MTZ2 32 H3** MTZ2 40 H3
Masterpact MTZ3	MTZ3 40 H1/H2						
Masterpact NW					NW25H1 **NW32H1** NW40H1	NW25H2 **NW32H2** NW40H2	NW25H3 **NW32H3** NW40H3 NW40bH1/2

Type of Canalis busbar trunking	KTC4000						
Isc max kArms	25 kA	30 kA	42 kA	50 kA	65 kA	85 kA	100 kA
Type of circuit breaker: Compact NS					NS3200N		
Masterpact MTZ2	MTZ2 32 H1/H2/H3 MTZ2 40 H1/H2/H3					MTZ2 32 H2/H3 MTZ2 40 H2/H3	
Masterpact MTZ3	**MTZ3 40 H1/H2** MTZ3 50 H1/H2						
Masterpact NW					NW32H1 **NW40H1**	NW32H2 **NW40H2** **NW40bH1/H2** NW50 H1/H2	

Type of Canalis busbar trunking	KTC4000 Reinforced short-circuit level						
Isc max kArms	25 kA	30 kA	42 kA	50 kA	65 kA	85 kA	100 kA
Type of circuit breaker: Compact NS					NS3200N		
Masterpact MTZ2	MTZ2 32 H1/H2/H3 MTZ2 40 H1/H2/H3					MTZ2 32 H2/H3 MTZ2 40 H2/H3	MTZ2 32 H3 MTZ2 40 H3
Masterpact MTZ3	**MTZ3 40 H1/H2** MTZ3 50 H1/H2 MTZ3 63 H1/H2						
Masterpact NW					NW32H1 **NW40H1**	NW32H2 **NW40H2**	NW32H3 **NW40H3** **NW40bH1/H2** NW50H1/H2

Type of Canalis busbar trunking	KTC5000						
Isc max kArms	25 kA	30 kA	42 kA	50 kA	65 kA	85 kA	95 kA
Type of circuit breaker: Masterpact MTZ2					MTZ2 32 H1/H2/H3 MTZ2 40 H1/H2/H3	MTZ2 32 H2/H3 MTZ2 40 H2/H3	MTZ2 32 H3 MTZ2 40 H3
Masterpact MTZ3					MTZ3 40 H1/H2 **MTZ3 50 H1/H2** MTZ3 63 H1/H2		

Type of Canalis busbar trunking	KTC5000 Reinforced short-circuit level						
Isc max kArms	25 kA	30 kA	42 kA	50 kA	65 kA	85 kA	100 kA
Type of circuit breaker: Masterpact MTZ2					MTZ2 32 H1/H2/H3 MTZ2 40 H1/H2/H3	MTZ2 32 H2/H3 MTZ2 40 H2/H3	MTZ2 32 H3 MTZ2 40 H3
Masterpact MTZ3					MTZ3 40 H1/H2 **MTZ3 50 H1/H2** MTZ3 63 H1/H2		

Type of Canalis busbar trunking	KTC6300						
Isc max kArms	25 kA	30 kA	42 kA	50 kA	65 kA	85 kA	100 kA
Type of circuit breaker: Masterpact MTZ2					MTZ2 40 H1/H2/H3	MTZ2 40 H2/H3	MTZ2 40 H3
Masterpact MTZ3					MTZ3 40 H1/H2 MTZ3 50 H1/H2 **MTZ3 63 H1/H2**		

Canalis KTC

Standard IEC 60364-5-51 categorises a large number of external influences to which electrical installations can be subjected, for instance the presence of water, solid objects, shocks, vibrations and corrosive substances.
The importance of these influences depends on the installation conditions.
For example, the presence of water can vary from a few drops to total immersion.

Degree of protection IP

Standard IEC 60529 (February 2001) indicates the degree of protection provided by electrical equipment enclosures against accidental direct contact with live parts and against the ingress of solid foreign objects or water.

This standard does not apply to protection against the risk of explosion or conditions such as humidity, corrosive gases, fungi or vermin.

The IP code comprises 2 characteristic numerals and may include an additional letter when the actual protection of persons against direct contact with live parts is better than that indicated by the first numeral.

The first numeral characterises the protection of the equipment against penetration of solid objects and the protection of people.
The second numeral characterises the protection of the equipment against penetration of water with harmful effects.

Remarks concerning the degree of protection IP

The degree of protection IP must always be read and understood numeral by numeral and not as a whole.
For example, an IP31 enclosure is suitable for an environment that requires a minimum degree of protection IP21. However an IP30 wall-mount enclosure is not suitable.

The degrees of protection indicated in this catalogue are valid for the enclosures as presented. However, the indicated degree of protection is guaranteed only when the installation and device mounting are carried out in accordance with professional standard practice.

Additional letter

Protection of persons against direct contact with live parts.

The additional letter is used only if the actual protection of persons is higher than that indicated by the first characteristic numeral of the IP code.
If only the protection of persons is of interest, the two characteristic numerals are replaced by the letter "X", e.g. IPxxB.

Degree of protection IK

Standard IEC 62-262 defines a coding system (IK code) indicating the degree of protection provided by electrical equipment enclosures against external mechanical impact.

Installation standard IEC 60-364 provides a cross-reference between the various degrees of protection and the environmental conditions classification, relating to the selection of equipment according to external factors.

IK code●●

The IK code comprises 2 characteristic numerals (e.g. IK05).

Practical guide UTE C 15-103 shows, in the form of tables, the characteristics required for electrical equipment (including minimum degrees of protection), according to the locations in which they are installed.

Meaning of the numerals and letters representing the degree of protection IP.

The Canalis KTC busbar trunking products are designed to provide **IP55D and IK08** protection.

DD202437

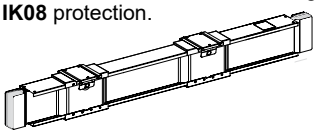

1st characteristic numeral: corresponds to protection of equipment against penetration of solid objects and protection of persons against direct contact with live parts.

Protection of equipment	Protection of persons			
Non-protected.	Non-protected.	0		
Protected against the penetration of solid objects having a diameter greater than or equal to 50 mm.	Protected against direct contact with the back of the hand (accidental contact).	1	DD210014	Ø 50 mm
Protected against the penetration of solid objects having a diameter greater than or equal to 12.5 mm.	Protected against direct finger contact.	2	DD210015	Ø12,5 mm
Protected against the penetration of solid objects having a diameter greater than or equal to 2.5 mm.	Protected against direct contact with a 2.5 mm diameter tool.	3	DD210016	Ø2,5 mm
Protected against the penetration of solid objects having a diameter greater than 1 mm.	Protected against direct contact with a 1 mm diameter wire.	4	DD210017	Ø1 mm
Dust protected (no harmful deposits).	Protected against direct contact with a 1 mm diameter wire.	5	DD210018	
Dust tight.	Protected against direct contact with a 1 mm diameter wire.	6	DD210019	

2nd characteristic numeral: corresponds to protection of equipment against penetration of water with harmful effects.

Protection of equipment			
Non-protected.	0		
Protected against vertical dripping water (condensation).	1	DD210006	
Protected against dripping water at an angle of up to 15°.	2	DD210007	15°
Protected against rain at an angle of up to 60°.	3	DD210008	60°
Protected against splashing water in all directions.	4	DD210009	
Protected against water jets in all directions. Test duration: 1 mn/m² casing	5	DD210010	
Protected against powerful jets of water and waves.	6	DD210011	
Protected against the effects of temporary immersion.	7	DD210012	1m
Protected against the effects of prolonged immersion under specified conditions.	8	DD210013	m

Additional letter

Corresponds to protection of persons against direct contact with live parts.

A	With the back of the hand.
B	With the finger.
C	With a 2.5 mm diameter tool
D	With a 1 mm diameter tool

Degrees of protection IK against mechanical impact

The IK code comprises 2 characteristic numerals corresponding to a value of impact energy, in joules.

DD210533-G

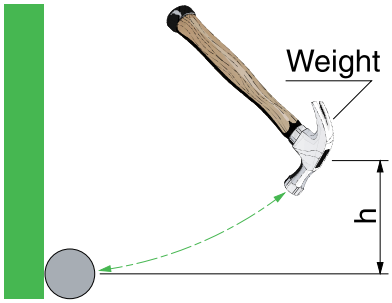

	Weight (kg)	Height (cm)	Energy (J)
00	Non-protected		
01	0.20	7.50	0.15
02		10	0.20
03		17.50	0.35
04		25	0.50
05		35	0.70
06	0.50	20	1
07		40	2
08	1.70	30	5
09	5	20	10
10		40	20

Canalis KTC

Origin of harmonic currents

Harmonic currents are caused by non-linear loads connected to distribution systems, i.e. by loads that draw current with a waveform different that that of the voltage that supplies them.

The most common non-linear loads are equipment including rectifiers, fluorescent lighting and computer hardware.

In installations with a distributed neutral, non-linear loads may cause significant overloads in the neutral conductor due to the presence of third-order harmonics.

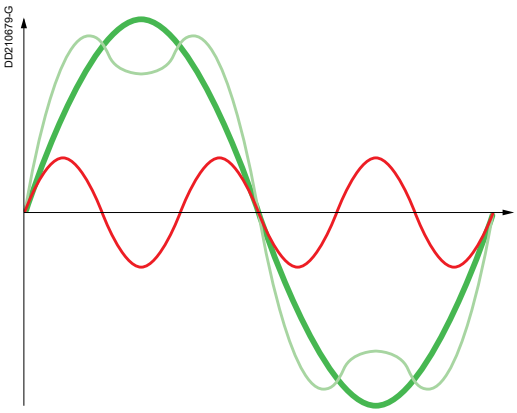

Harmonic order
The order is the ratio between the harmonic frequency fn and the fundamental frequency (generally the power frequency, 50 or 60 Hz):
n = fn/f1

By definition, the fundamental f1 is order 1 (H1).

Third-order harmonics (H3) have a frequency of 150 Hz (when f1 = 50 Hz).

Estimating THD (total harmonic distortion)

The presence of third-order harmonics depends on the applications involved.
It is necessary to carry out an in-depth study on each non-linear load to determine the level of H3:
ih3 (%) = 100 x i3 / i1
- i3 = rms current of H3
- i1 = rms current of the fundamental

Assuming that H3 is preponderant among harmonics, the THD is close to the value of H3 (ih3 (%)).

There are two decisive factors:
- the types of connected devices:
  - disturbing loads: fluorescent lighting, computer hardware, rectifiers, arc furnaces, etc.
  - non-disturbing loads: heating, motors, pumps, etc.
- the ratio between the two types of disturbing loads.

Workshops
Mix of disturbing loads (computers, UPSs, fluorescent lighting) and non-disturbing loads (motors, pumps, heating).

Low probability of harmonics
THD ≤ 15 %.

Offices
Numerous disturbing loads (computers, UPSs, fluorescent lighting).

High probability of harmonics
15 % < THD ≤ 33 %.

Effects of harmonics on Canalis busbar trunking

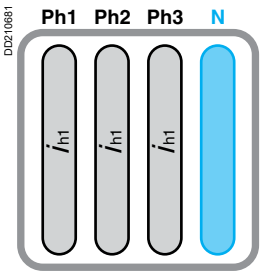

Fundamental frequency: ih1 (50 Hz)

No current in the neutral.
The conductors are correctly sized.

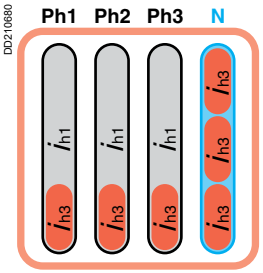

Fundamental frequency: ih1 (50 Hz) and 33 % of H3

Abnormal temperature rise in the conductors caused by current at a higher frequency in the phases (skin effect) and current in the neutral caused by summing of the H3 harmonics.

The only effective solution

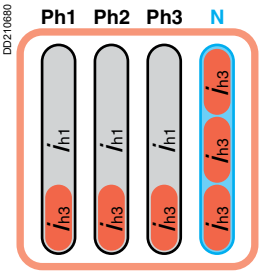

Fundamental frequency: ih1 (50 Hz) and 33 % H3

Reduce the current density in ALL conductors by using appropriately sized trunking.

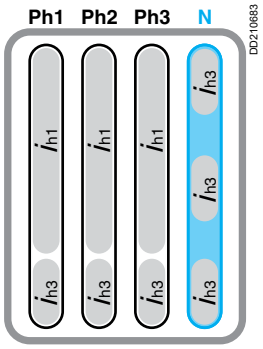

Busbar-trunking selection

THD ≤ 15 %	15 % < THD ≤ 33 %	THD > 33 %	Busbar trunking	Rating (A)
1000	800	630	KTC	1000
1350	1000	800	KTC	1350
1600	1350	1000	KTC	1600
2000	1600	1350	KTC	2000
2500	2000	1600	KTC	2500
3200	2500	2000	KTC	3200
4000	3200	2500	KTC	4000
5000	4000	3200	KTC	5000

Example: For a total rms current of 2356 A (estimation based on power drawn by loads, including harmonics), the operational current is 2500 A.
THD is estimated at 30 %. The appropriate trunking is KTC 3200 A.

For more information on harmonics

See the Cahier Technique publications on the Schneider Electric web site: www.se.com

Canalis KTC

Determining the DC current value

Thermal effect

Rule

The total power dissipated as heat must remain constant in the duct:
Pac = Pdc

Where:
- the power dissipated as heat: **Pac** = 3 x R x Iac² where:
  - R= resistance of a conductor
  - Iac = conductor rms current
- the dissipated power for 4 conductors: **Pdc** = 4 x R x Idc² where:
  - Idc = direct current.

Selection table

- 1 source

Case of 2 conductors in parallel for the + and 2 conductor in parallel for the **–** (only 1 circuit in the busbar trunking):

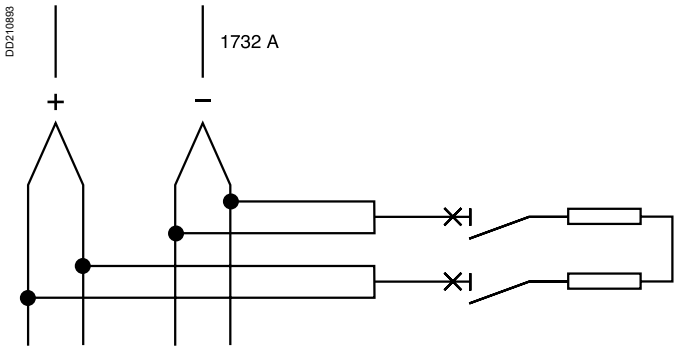

- 2 sources

Case of 1 conductor for the + and 1 conductor for the **–** (2 circuits possible in the same busbar trunking):

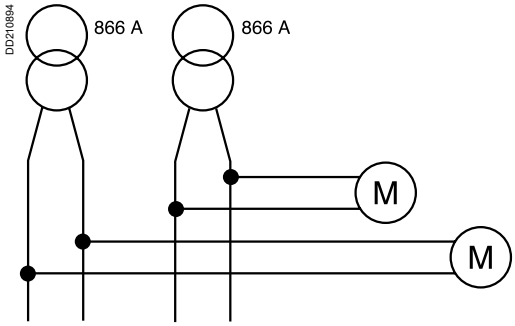

Busbar trunking rating (A)	1 source	2 sources
1000	1732	866
1350	2165	1083
1600	2771	1385
2000	3464	1732
2500	4330	2165
3200	5542	2771
4000	6928	3464
5000	8660	4330
6300	10910	5455

Protection

With DC, there is no zero crossing point of the voltage and current to facilitate arc extinction in the protective device.
The arcing time is longer and the energy that has to be absorbed is higher than for AC.
The voltage of the DC arc must rise to the source voltage very quickly in order to "put out" the short-circuit current.
"Shortened" electrical equation: Unetwork = R x Isc + Uarc where:

- Isc = (Unetwork - Uarc) / R
- Isc = 0 when Uarc = Unetwork.

Use with specific switchgear

A quick rise in arcing voltage can be achieved by using series fuses, one fuse on the **+** and one fuse on the **–** of each circuit.
For some current rating and fuse characteristics, the placing of two fuses in series on each polarity may be specified (highly inductive circuit).
In some cases, two fuses must be placed in parallel for each polarity.

Saline environment

For use in a saline environment, storage and installation precautions must be followed.
Please contact your sales office.

Canalis KTC

KT busbar trunking derating at 400 Hz

Values at 35 °C.
Application of a derating coefficient at 400 Hz combined with that for temperature derating.

Busbar trunking derating								
	KTC10	KTC13	KTC16	KTC20	KTC25	KTC32	KTC40	KTC50
In (A)	688	851	1014	1327	1635	2024	2394	3162
Coefficient K at 400 Hz	0.86	0.85	0.84	0.83	0.82	0.81	0.80	0.79

Voltage drop

3-phase voltage drop, in millivolts per metre and per amp 400 Hz with load spread over the run.
For a concentration of load at the end of a run (transport), the voltage drops are double those shown in the table below.

ΔU evenly spread (mV. A. m)								
	KTC10	KTC13	KTC16	KTC20	KTC25	KTC32	KTC40	KTC50
Cos Φ = 1.0	0.079	0.068	0.057	0.044	0.038	0.033	0.025	0.020
Cos Φ = 0.9	0.12	0.109	0.096	0.079	0.067	0.054	0.045	0.039
Cos Φ = 0.8	0.13	0.121	0.108	0.089	0.076	0.060	0.051	0.045

Conductor characteristics

Conductor impedance								
	KTC10	KTC13	KTC16	KTC20	KTC25	KTC32	KTC40	KTC50
Average ohmic resistance of phase and neutral conductors at In [1] Rb1ph (mΩ/m)	0.092	0.079	0.066	0.051	0.044	0.039	0.029	0.023
Average resistance at In and rated F(Hz) [1] Xph (mΩ/m)	0.14	0.128	0.120	0.104	0.088	0.064	0.059	0.056

(1) In line with the CENELEC RO.64.013 document.

Canalis KTC

Loads monitored by a power meter in tap-off units

Canalis offers measurement and metering units that can be mounted on both Canalis KS and KT trunking ranges, available in two ratings (250 A and 400 A). They are equipped with mounting plates designed to receive a PowerLogic PM810UMG Power Meter, a Compact NSx circuit breaker and the associated current transformers.

Data are collected by a Modbus serial communication bus and converted in Ethernet TCP/IP through an EGX gateway. Provided informations can easily be used in a supervision system.

DD205664

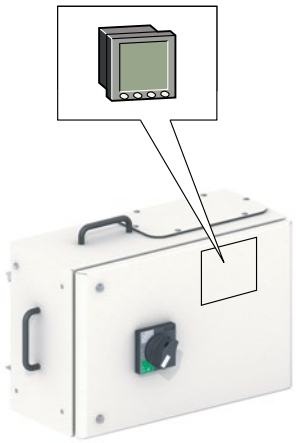

DD205947-G

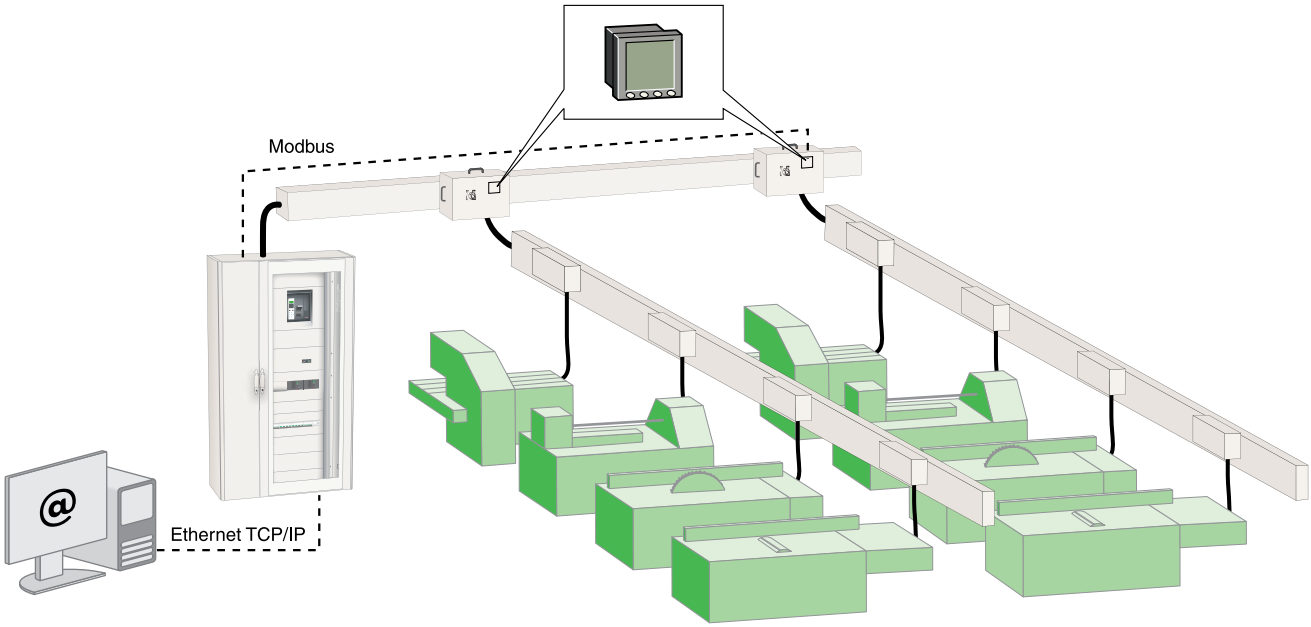

Data acquisition in distributed architectures

When busbar trunking is located upstream of a secondary trunking line, the measurement devices should be installed in the tap-off units.

DD205948-G

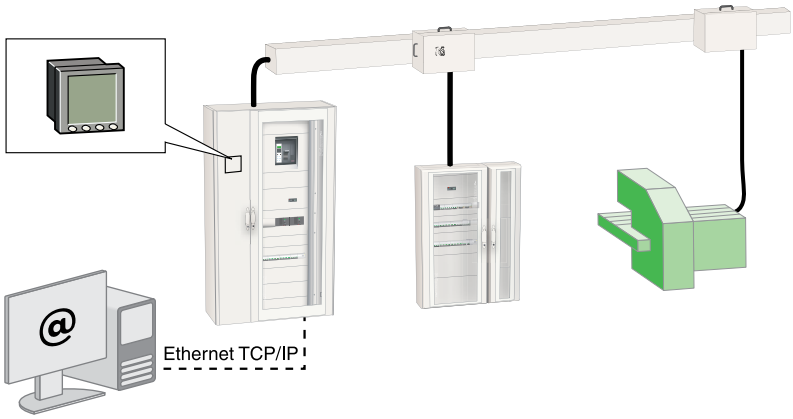

Canalis KTC

As required by standards, Canalis KT busbar trunking complies with:
1 - material resistance to abnormal temperatures.
2 - flame propagation resistance.
3 - fire barrier function when going through a partition wall.
4 - conservation of all circuits for 1.30 hours in an insulating sheath.

Definition of tests

1 - Insulating material resistance test to abnormal temperatures

Objective
To check a material will not be suspected as being the origin of a secondary fire outbreak.

As defined in standards § 8.1.3 IEC 61439-1 and IEC 60695-2-10 to -2-13.

Method
Application of an incandescent wire for 30 seconds on the insulating materials in contact with live parts.

Result criteria
The specimen is considered to have passed the incandescent wire test if:
■ if there is no visible flame and no sustained incandescence
■ the specimen's flames and incandescence go out within 30 seconds of the incandescent wire being removed.

2 - Flame propagation resistance test

Objective
To check a busbar trunking will not create secondary fire outbreaks.

As defined in standards § 10.101 IEC 61439-6 and IEC 60332 part 3.

Method
■ Application of a flame for 40 minutes on a straight length of busbar trunking whose centre is located 2.5 metres from the edge of the burner.

Result criteria
The specimen is considered to have passed the test if:
■ combustion does not occur
■ the maximum extent of the burned part (external and internal) of the busbar trunking does not go beyond 2.5 metres above the lower edge of the burner.

3 - Fire barrier test through a partition wall

Objective
To check a busbar trunking will not propagate a fire from one room to another by crossing a fire barrier wall for 60, 120, 180, or 240 minutes.

As defined in standard EN 1366-3; EN 1363-1; ISO 834; DIN 4102 part 9.

Method
The fire barrier busbar trunking section to be tested is placed in an oven which executes a standardised temperature-time curve.

Result criteria
The specimen is considered to have passed the test if:
- there are no flames behind the fire barrier
- there is no smoke or gas behind the fire barrier (not requested by the standard; can appear as a remark in the test report)
- the temperature rise of the casing behind the fire barrier does not exceed 180°C.

4 - Conservation of all circuits in fire conditions test

Objective
To check all the busbar trunking's electrical circuits are preserved in fire conditions.

As defined in standard DIN 4102 part 12.

Method
Its entire length inserted, the busbar trunking is taken as a specimen in an insulating sheath.

Result criteria
The specimen is considered to have passed the test if:
- conductor continuity is preserved
- there is no short-circuit between conductors.

Canalis KTC

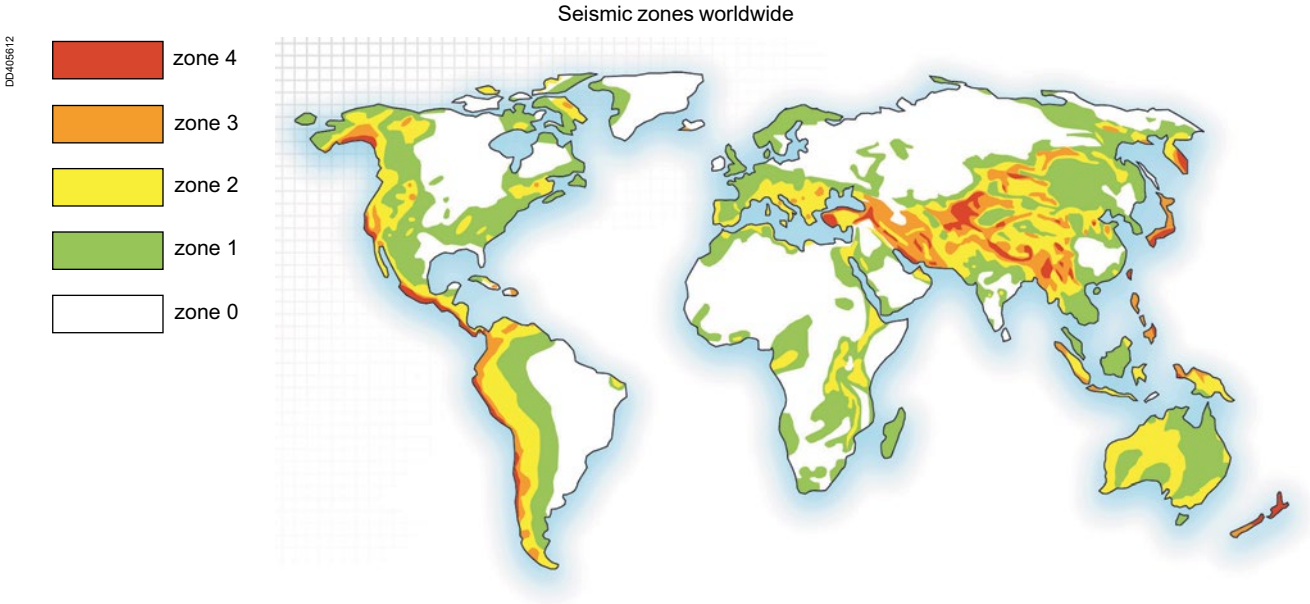

Canalis KT is seismic certified in accordance with the protocol described in IEC 60980 and a seismic level equivalent to >7 on the Richter scale and severity 9 on the international MSK- 64 scale.
The spectrum used for testing is the one specified for civil engineering and nuclear applications in GOST 17516.1-90.

Spectrum according to GOST

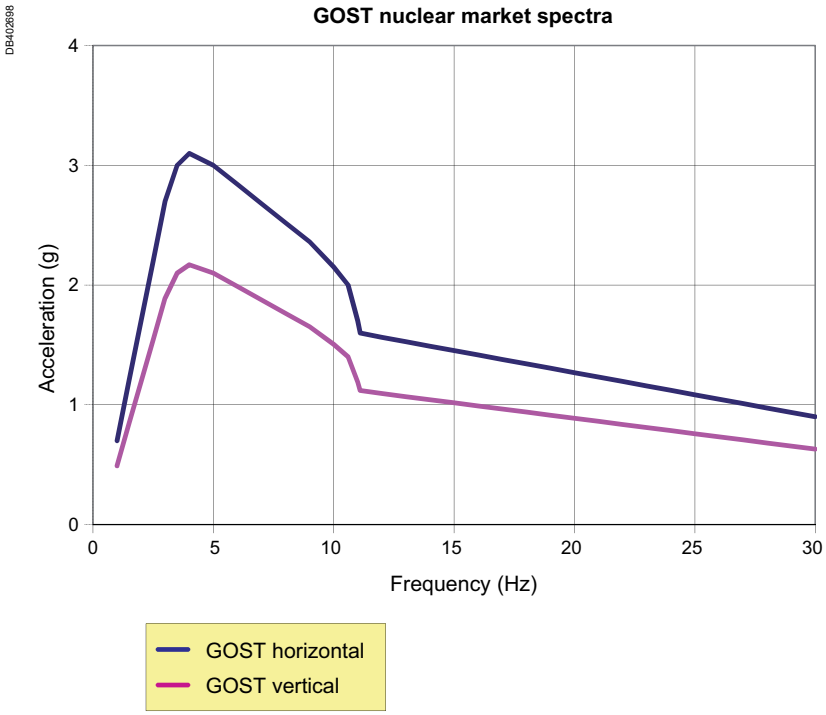

Installation and support

Supports for conventional applications can be used for seismic applications by following the recommendations below:

■ For flexible support
Use supports and rods, with a minimum length of 1000 mm and additional clamping as per the following diagram.

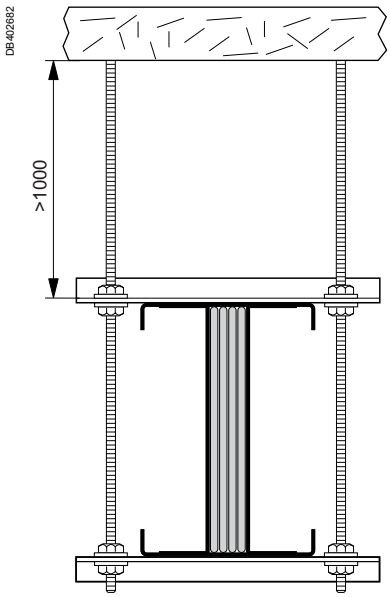

Safety limit: 250 mm round the busbar trunking (amplitude noted during testing).

■ For rigid support
Use of conventional mechanically welded consoles with rigid busbar trunking fastening.

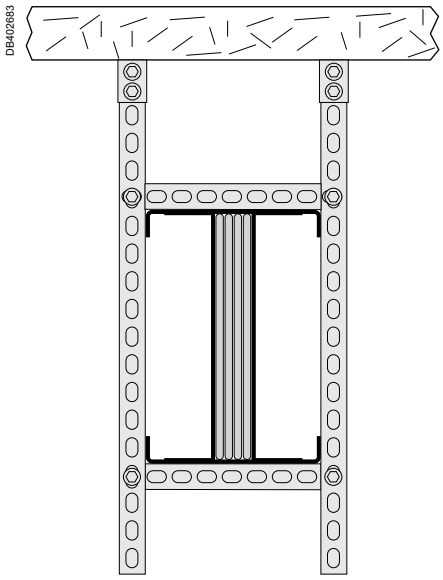

For both cases:
■ its conventional fixing centre distances are maintained (3 m edgewise, 2 m flat)
■ the levels achieved are applicable for horizontal, edgewise or flat or vertical installations.

Canalis KTC

All the operations described below are given for indication only. Under no circumstances can they be used to substitute the installation company's own procedures and engage Schneider Electric's responsibility.

Scope
High power busbar trunking, transformer-switchboard links.

Required tools
- Multimeter.
- 500 V megger.
- Roto-phase.

Prerequisites
- If need be, the old equipment has been removed from the premises.
- The new equipment has been manoeuvred into the premises where it is to be installed by the installation contractor.
- The equipment has been installed by the installation contractor in accordance with manufacturer's recommendations.
- The equipment's installation diagram, connection diagram and assembly results sheet are available for the commissioning engineer.

De-energising the installation and making it safe
The works manager is responsible for worksite safety and must ensure the installation is de-energised and made safe in accordance with safety rules before any inspection or measurement is performed.

Equipment checking, positioning and identification

After the installation contractor has positioned, assembled and connected the busbar trunking in accordance with the supplied installation, assembly and connection diagrams, and using the recommended tools and handling equipment, the following characteristics must:
- be noted
- be checked for compliance with respect to the details shown on the drawing.

Brand:	-	Busbar trunking rating:	-
Equipment type:	-	Serial number:	-
Reference:	-	Date of manufacture:	-
Transformer power:	-	Source circuit breaker (busbar trunking protection):	-

General visual inspection
The equipment has been chosen according to its electrical environment (rating and protection adapted to operating conditions).
The following points do not require checking.

Points concerning reception, storage and handling
No signs of:
- shock (which may deteriorate internal insulation: conductor insulation on straight lengths or at the tap-off points or joint blocks)
- humidity or oxidation (equipment stored outside should have been covered with a plastic sheet, sheltered from humidity, dirt and dust)
- firm's label defining the product's characteristics.

DD206098

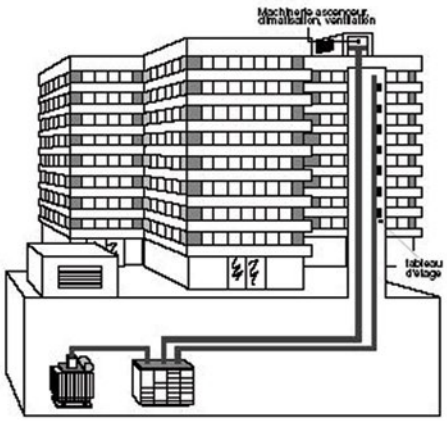

Points concerning installation and fittings
Assembly compliance with the specifications of the installation drawing, service instructions and the catalogue:
- no busbar trunking twisting
- positioning and distance of the busbar trunking with respect to the building
- fixings, compliance of the between centres distance of the equipment for flat or edgewise, horizontal or vertical distribution
- clamps, not fully blocked to allow movement due to longitudinal forces
- presence of expansion sections if necessary.

Checking power connections

DD205950-G

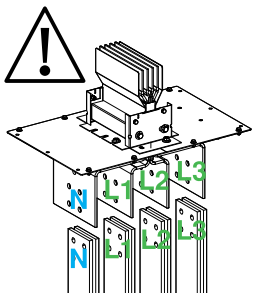

DD210764-G

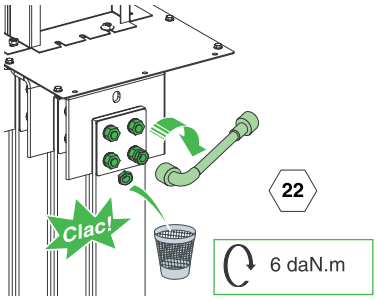

General visual inspection

Check the number of connection parts and their cross-sections for each conductor (see "Installation guide").

Check insulation distances between 2 conductors and between conductors and metal panels.

Check the tightening torque of bolts not fitted with torque nuts. For bolts fitted with torque nuts, check the head has broken-off.

DD205951-G

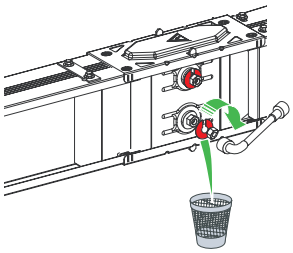

Check the bolt length exceeding the nut ; some bolts may have been removed and then put back, but left untightened.

Mark each tightened nut using indelible varnish. As well as a means of self-inspection to ensure correct tightening torque, it also allows any untightening to be identified.

Class 8-8 nuts and bolts (M8 on LV switchboard side, see "Commissioning Guide for Schneider Electric LV Switchboards").

Bolt	Tightening torque
HM16	16 daN.m
HM14	12 daN.m
HM12	7 daN.m
HM10	5 daN.m

The results of all these checks must be noted on the results sheet by the installation contractor.

PB104861

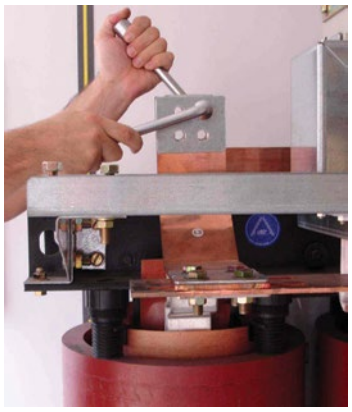

Checking insulation between live conductors

These measurements and checks can only be performed if:
- each link is disconnected by an isolating device
- each link is disconnected from the upstream transformer, with the main circuit breaker upstream of the LV switchboard unplugged and in the open position.

Test means: 500 V DC megger (DC to avoid capacitive currents)
Measurements: 6 measurements between live conductors (between phases and then between each phase and neutral).
LV circuit insulation value, according to IEC 60364-6 (and 61.3.3) standard:
- rated voltage < 500 V U test DC = 500 V Ri ⩾ 1 MΩ
- rated voltage > 500 V U test DC = 1000 V Ri ⩾ 1 MΩ.

Canalis KTC

Checking the earth network and locks

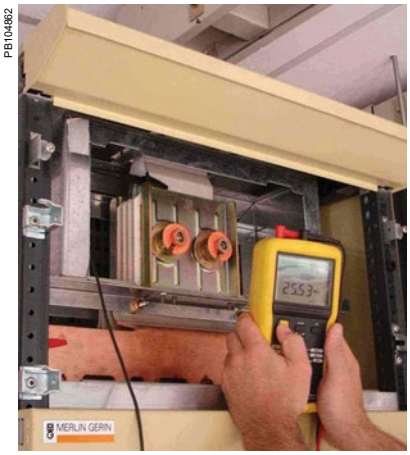

PB104862

Earth network

General visual inspection

Check:
- the galvanised steel casing sides are earthed (note: this depends on the earthing system)
- connection quality
- cable cross-section
- there are no loose metal parts (washers, screws) in the tap-off units.

Note: the results of these checks must have already been noted on the results sheet by the installation contractor.

Checking insulation between live conductors and earth

Following this check, each link must be reconnected to the upstream transformer (use the 2nd available 6 daN.m torque bolt heads).

Test means: 500 V DC megger (DC to avoid capacitive currents)
Measurements: between each phase or neutral (1) and earth (the casing if it is connected to earth).
LV circuit insulation value, according to IEC 60364-6 (and 61.3.3) standard:
- rated voltage < 500 V U test DC = 500 V Ri ⩾ 1 MΩ
- rated voltage > 500 V U test DC = 1000 V Ri ⩾ 1 MΩ.

(1) No neutral insulation if the earthing system is such that the neutral is connected to or used as the earth.
Caution: In this case, once the transformer has been reconnected (star secondary), the phase-earth measurement is the winding resistance.

PE protective circuit equipotential

Reference: IEC 61439-1:
Check PE protective circuit continuity by visual inspection and random continuity testing.
The previously performed "phases-PE" insulation test must have been compliant.
Test means: ohmmeter.

Locks

To protect personnel by not allowing access to live parts through the use of locks.
Only concerns key operated safety locks.

Checking connections and auxiliary testing

Check not relevant to busbar trunking.

De-energised equipment operating tests

Checking source circuit breaker protection settings

Compliance check in accordance with the installation drawing specifications:
- Imax thermal
- In magnetic.

Note: this check is only to be performed if the busbar trunking is commissioned at the same time as the transformer: the source circuit breaker protection setting checks are related to transformer commissioning.
Check not relevant if the transformer has already been commissioned.

If this check is successful, the busbar trunking can be commissioned and the energised operating tests performed with the appropriate protective equipment

Commissioning and energised equipment operating tests

Note: commissioning can only be carried out by personnel with appropriate authorisations.

Preliminary operation: energising the off-load transformer.
Closing the source circuit breaker.

Checking phase order

Objective: to detect, in order to correct, an inversion of the phases or neutral amongst the busbar trunking's 4 incoming and outgoing connections with respect to the transformer output.

Test means: roto-phase or 3-phase harmonic analyser.

If busbar trunking energising is successful, a progressive start-up of the factory must be requested to definitively validate commissioning.

If unsuccessful, the previous checks must be carried out again to try and locate the fault. Before undertaking this, the equipment must once again be made safe.

Final putting into service test

This test is performed once the busbar trunking has been energised.
The progressive start-up of loads will highlight any undesirable phenomena due to the increased average load.

Real life operating test
Once the high power busbar trunking has been energised, the other busbar trunking must be gradually put into service starting with those furthest from the load, then each load itself, those with high pull-in currents, then the lighting, contactors, heating, motors, etc.

There must not be excessive vibration, and no sparkovers should be observed.

The test simply consists of checking correct busbar trunking operation according to:
- the average number of machines in operation
- the load variation of each individual load
- the simultaneous operation of machines (superimposing of peaks).

If everything is in order, the busbar trunking is declared "in-service".
Testing is completed.

Installation guide

Introduction 3
Presentation and description 23
Catalogue numbers and dimensions 47
Design guide 141

Layout advice 182
Run optimisation 182
Positioning and supports 185
Anticipate unexpected worksite problems 188
Tips for determining dimensions at the worksite 189

Horizontal distribution 192
Positioning the tap-off units 192
Tap-off units 193
Checking and compensating for expansion 194

Rising mains 198
General 198
Positioning the busbar trunking without external fire barrier 199
Positioning the tap-off units 200
Positioning of supports 201
Positioning the external fire barriers 202
Installation with feed via a cable box or direct onto the switchboard 203

Panorama of connection solutions 206

Connection to LV switchboards 208
Selection guide 208
By Canalis interface 210
By universal feed unit 216
By feed and connection plates 218

Connection to cast resin transformers 222
Selection guide 222

Connection to Trihal cast resin transformers 224
Selection guide 224

Connection to cast resin transformers 227
By universal feed and connection plates 227

Connection to Minera immersed transformers 232
Horizontal incomer 232

Connection to Minera immersed transformers by standard interface 234
Vertical incomer 234

Connection to oil immersed transformers 236
By feed and connection plates or braids 236

Recommendations 239
Index 244

Canalis KTC

PowerSet Canalis Design software

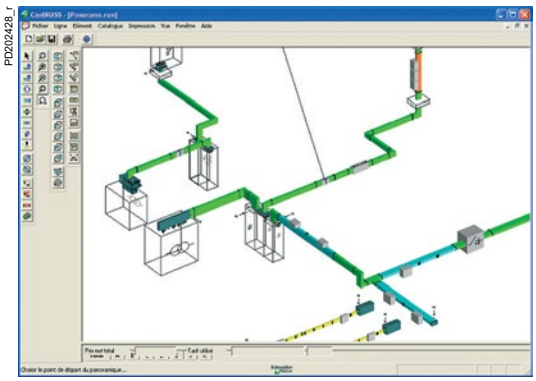

PowerSet Canalis Design software can be used to design the busbar trunking line.
The easy-to-use program creates a graphic model of the line, determines the length and draws up the list of Canalis KT parts to order.

The Canalis KT line is easy to specify simply by indicating the required dimensions. However, it is strongly advised to use the shortest and simplest path possible between the transformer and the switchboard.
It is important to carefully plan the layout of the transformer and switchboard in order to use:
- the maximum number of standard components rather than made-to-measure components
- the minimum number of components for changing direction
- straight made-to-measure components rather than made-to-measure components for changing direction.

Advice

Before defining your busbar trunking run, it is recommended you pay particular attention to the various parameters which could be detrimental to the installation.

Obstacles that obstruct the busbar trunking such as beams, pipes, etc.

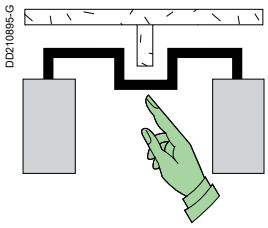

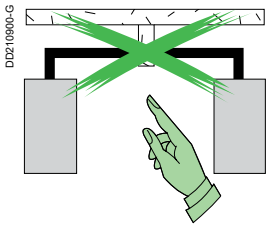

Badly positioned places for going through walls and floors.

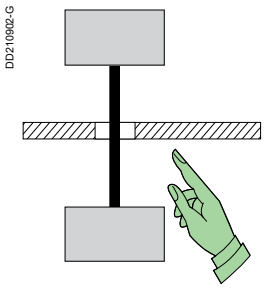

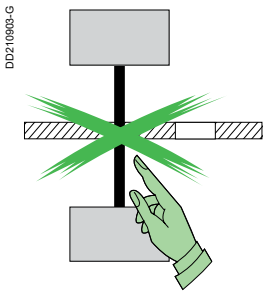

Joint positions in the middle of a partition wall.

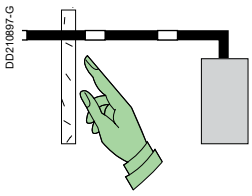

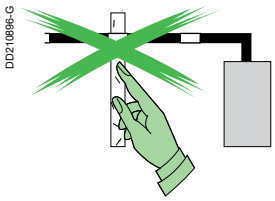

Insufficient ceiling height.

If the busbar trunking must be installed edgewise between a transformer and switchboard, ensure the ceiling height is sufficient for fitting the joint blocks from the top.
Reserve a space between the busbar trunking and the ceiling equal to 100 mm (variable depending on the rating, see "Catalogue numbers and dimensions").

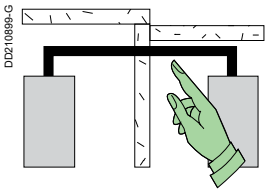

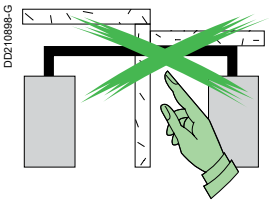

Going through a floor to bottom feed a switchboard on the next floor.

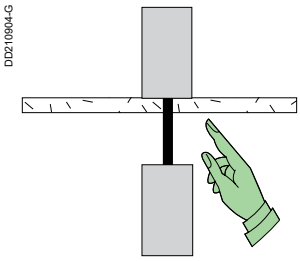

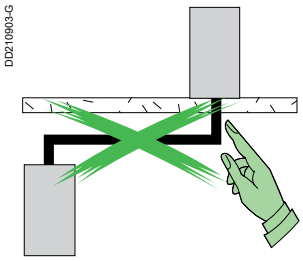

Difference in floor levels of 2 rooms.

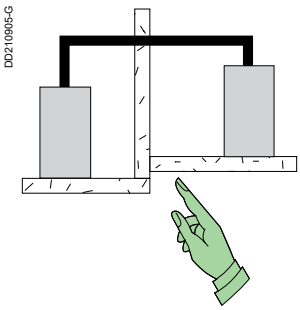

Also make sure that as the work progresses other tradesmen do not carry out installations that could hinder your initial layout.

Canalis KTC

Examples of link optimisation

Example 1
Reducing the number of changes of direction by modifying the switchboard or transformer layout.

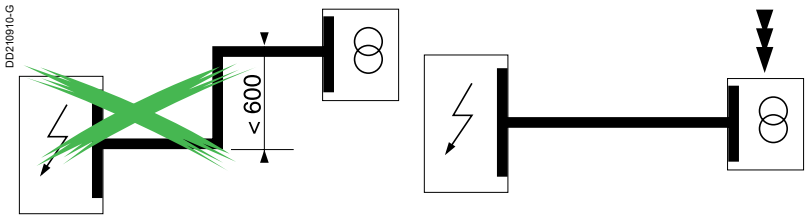

Example 2
Use of 2 standard elbows in place of a made to measure zed by increasing dimension "L".

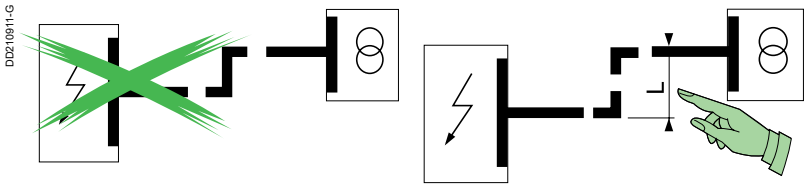

Modification of the busbar trunking height
By slightly increasing dimension "Z", replace a made to measure elbow feed connector with a standard feed connector and standard elbow section.

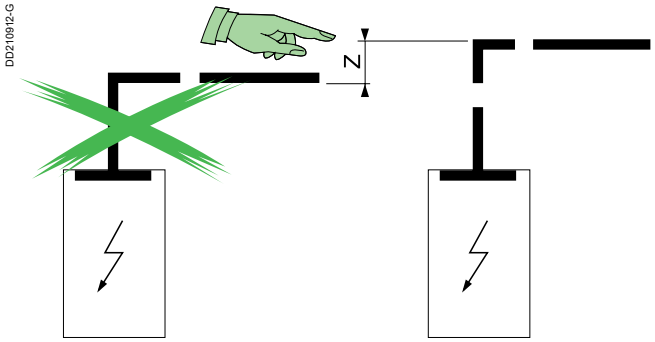

Neutral position

When choosing the layout of the electrical installation, it is important care is taken when positioning the neutral between the transformer and the switchboard.
If the neutral position is different to that planned, it is recommended the transformer is moved, if possible, to align the neutral with respect to the switchboard's neutral.
When it is not possible to move the transformer, it is recommended the phase order in the switchboard is inversed.
If this cannot be done, use the phase and neutral transposition section.

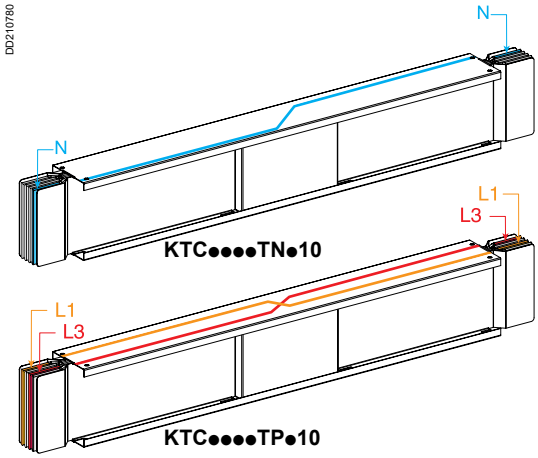

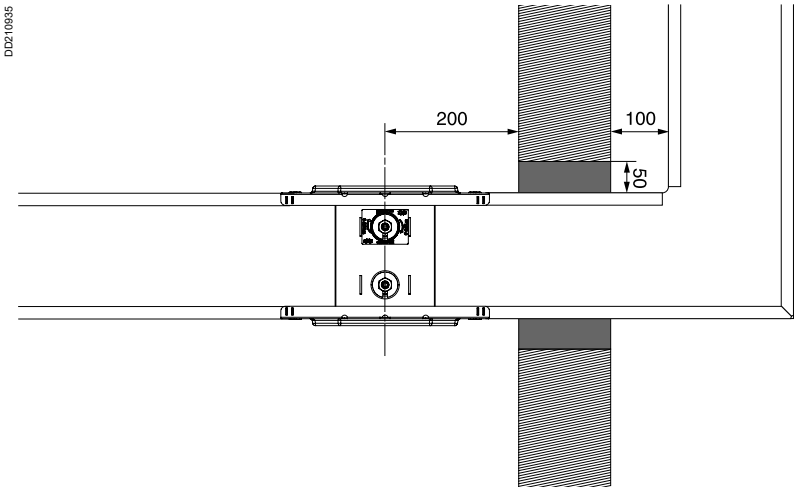

Edgewise passage through partition wall

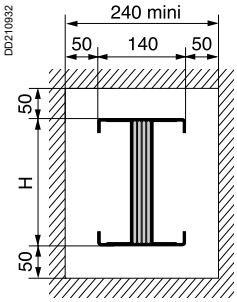

Flat passage through partition wall

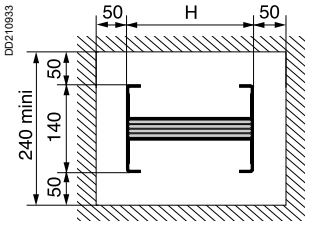

Rating (A)	1000	1350	1600	2000	2500	3200	4000	5000	6300
Height H (mm)	74	104	124	164	204	244	324	404	2 x 244 + 130

Edgewise passage through partition wall for 6300

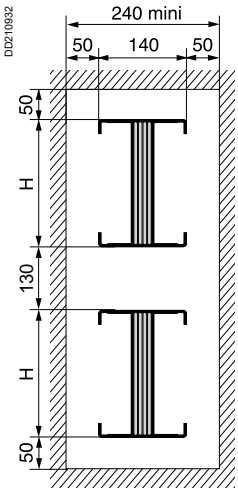

Flat passage through partition wall for 6300

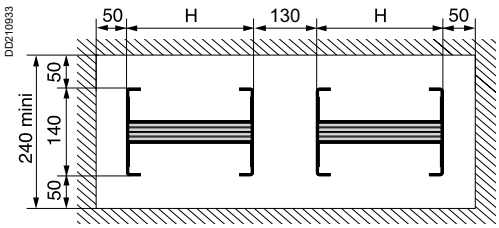

Canalis KTC

A support point as close as possible to the connections is needed because transformers, generator sets and switchboards must not support the weight of the busbar trunking.
In some industries, for service continuity reasons, transformers may be replaced quickly. The busbar trunking must be able to support itself.

Edgewise horizontal installation

The maximum recommended distance between supports is 3 metres.
In all cases, provide for 2 supports for 4 metre sections.
For clamping busbar trunking to support brackets, see page 196.

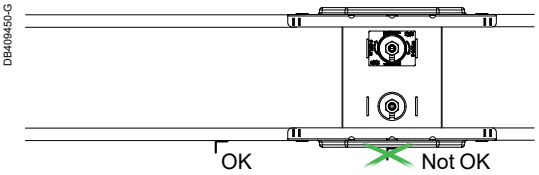

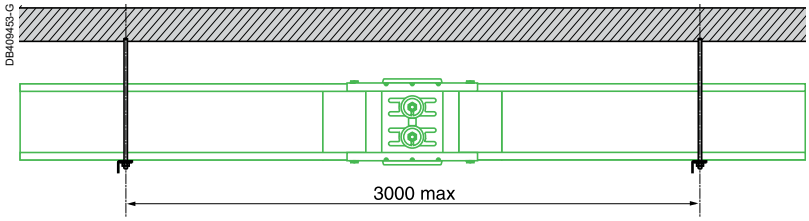

Flat horizontal installation

The recommended distance between supports is 2 metres. In addition, a support must be placed at 400 mm maximum from the joint block axis.
For clamping busbar trunking to support brackets, see page 196.

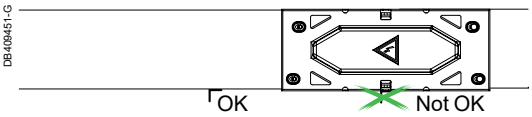

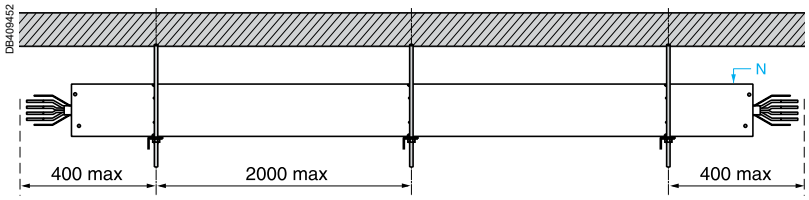

Example of spreading out supports

Supporting of LC elbow with a vertical branch

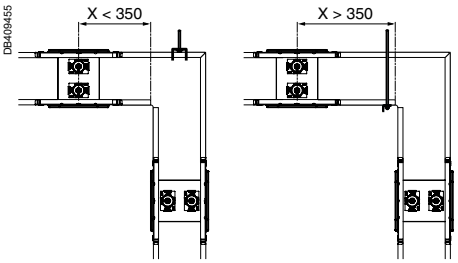

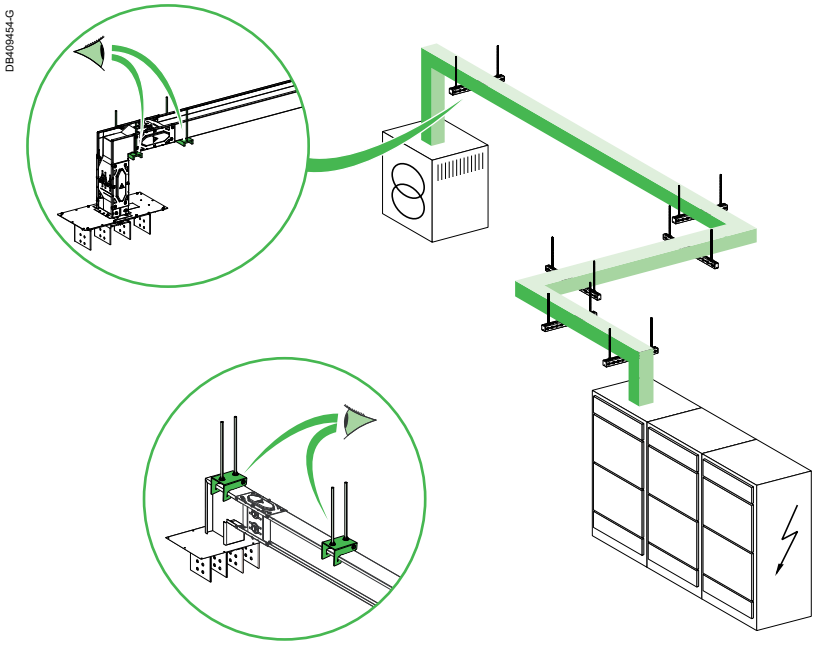

Supporting of LP elbow with a vertical branch

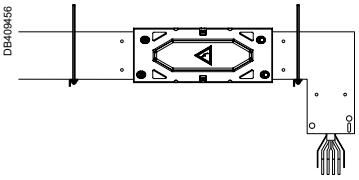

Supporting of LC elbows and TC tees
(top view)

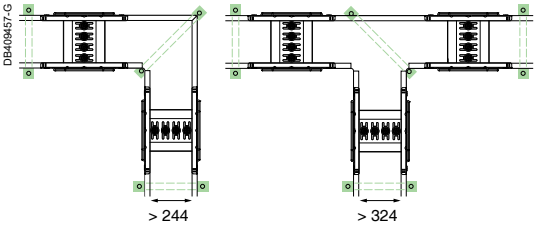

Rules to follow

- An element must never be left unsupported.
- For easier leveling, always use two supports for each element wherever possible.
- A bracket must never coincide with a junction block.
- The capacity of fixing brackets in terms of supporting is at least the weight of the busbar trunking system plus 90 kg, in accordance with IEC 61439-6.
- Terminals must be fixed by its own brackets not be supported by transformers or switchboards.
- Vertical branches must be always supported the closer as possible to the elbow angle.
- Elbows and zeds must be supported individually.
- Supports must be installed close to junctions.

Defining the layout, dimensions to be provided

The position of the joint block with respect to the transformer axes and switchboard edges (defined in the "Installation guide").

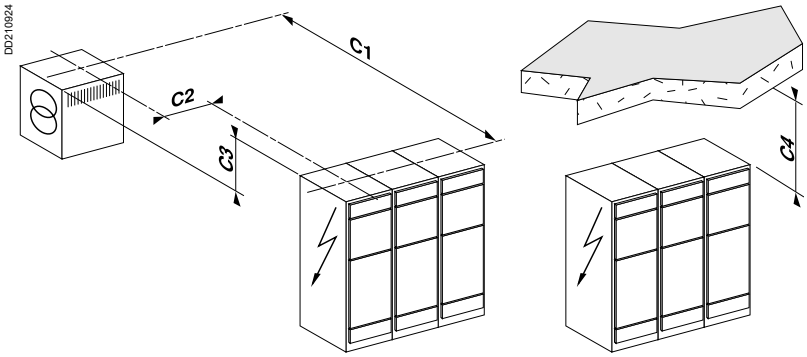

Distance of the busbar trunking from the wall

Edgewise installation

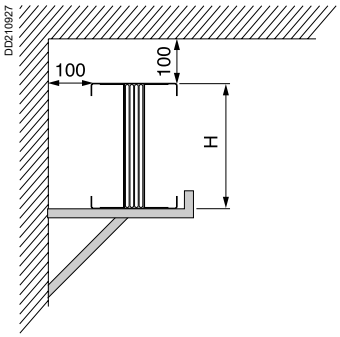

Flat installation

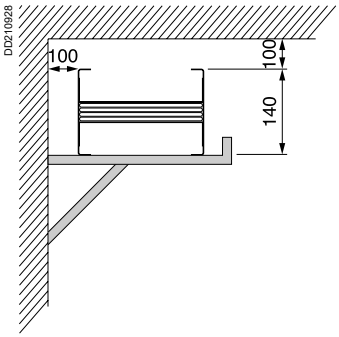

Rating (A)	1000	1350	1600	2000	2500	3200	4000	5000	6300
Height H (mm)	74	104	124	164	204	244	324	404	2 x 244 + 130

Distance between busbar trunking (without tap-off units)

Edgewise installation

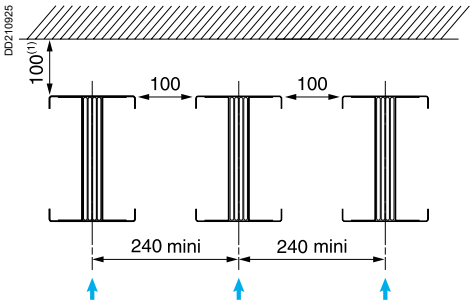

(1) Provide 2 times the height if the joint block must be fitted from the top.
➔ Direction of fitting joint blocks.

Flat installation

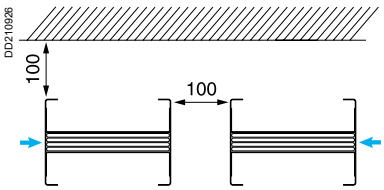

➔ Direction of fitting joint blocks.

Layout advice
Anticipate unexpected worksite problems

Canalis KTC

Undecided section

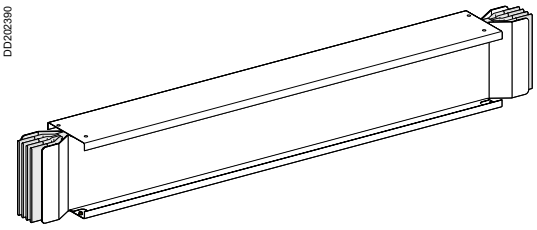

This section will be ordered after the gap to be filled has been measured at the end of the job. To optimise its delivery to site, prefer a straight section with a length of less than 2 metres rather than made to measure elbows.

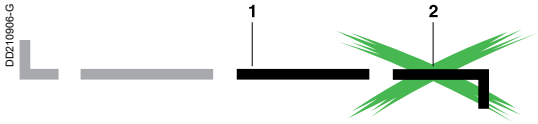

1: Standard straight section.
2: Made to measure elbow.

3: Made to measure straight section.
4: Standard elbow.

On the drawing, provide a minimum dimension of 700 mm to guarantee an adjustment of ±200 mm on-site. The minimum length of straight sections being equal to 500 mm.

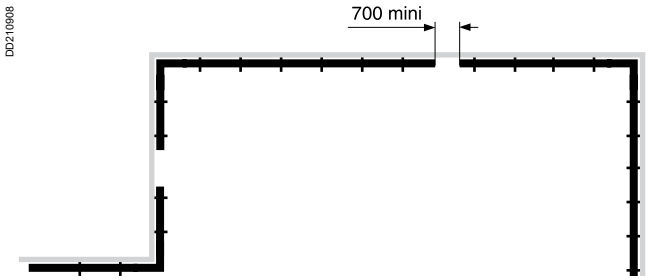

Layout recommendations for adjustable or undecided sections

In order to provide for the place needed for undecided section, install the elbows and the sections attached to the elbows in each angle (support each assembly using 2 supports on each straight section).

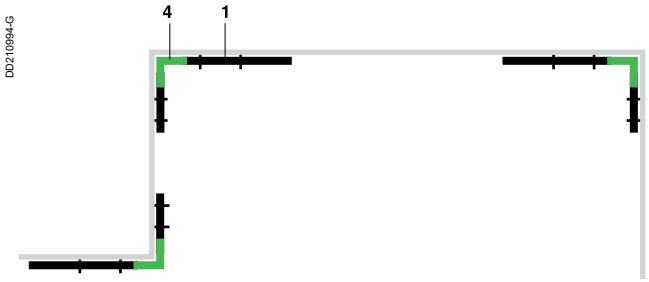

And then complete the layout with standard and made to measure straight sections.

Straight section

The nominal length "**L**" of a straight section is measured from the axis of the joint block to the other axis of the joint block, in millimetres (the joint block axis is located 20 mm from the end of the bars).
Dimension **L** of the standard or made to measure section = **x** - 40 mm.

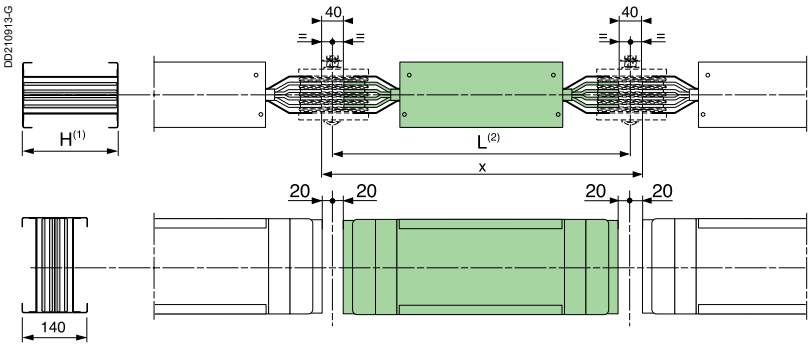

(1) For the different busbar trunking heights, see page 187.
(2) See "Run sections" in "Catalogue numbers and Dimensions".
x: measured dimension.

Example: **x** = 1860 mm hence L = 1860 - 40 = 1820 mm.

Change-of-directions

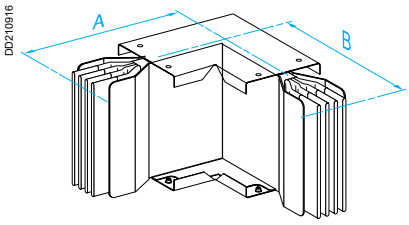

A and **B**: See "Changes of direction" in "Catalogue numbers and Dimensions".

Flat elbows

The nominal length of each branch is measured from the axis of the joint block to the axis of the other branch, in millimetres. The joint block axis is located 20 mm from the end of the bars.

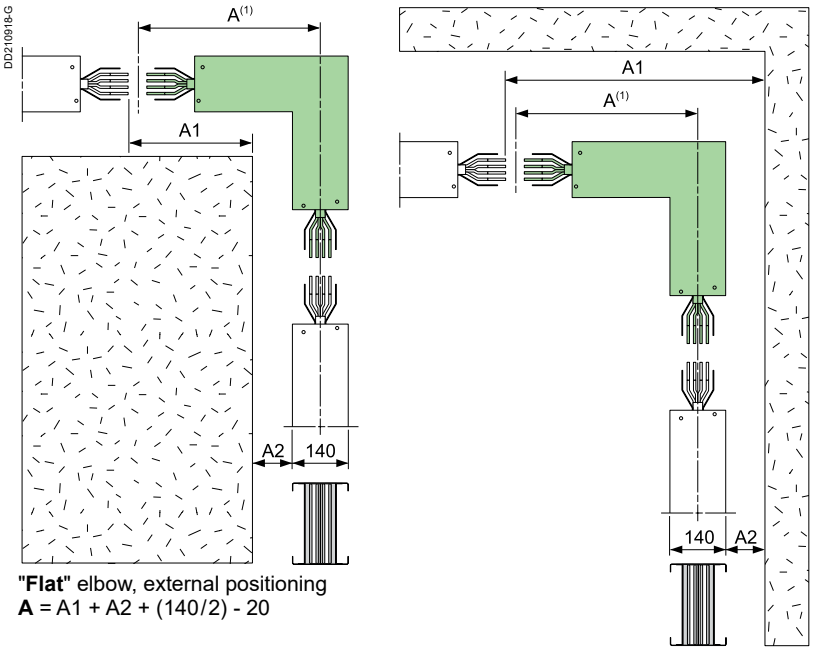

"**Flat**" elbow, external positioning
A = A1 + A2 + (140/2) - 20

"**Flat**" elbow, internal positioning
A = A1 - A2 - (140/2) - 20

(1) See "Changes of direction" in "Catalogue numbers and Dimensions".

Layout advice
Tips for determining dimensions at the worksite

Canalis KTC

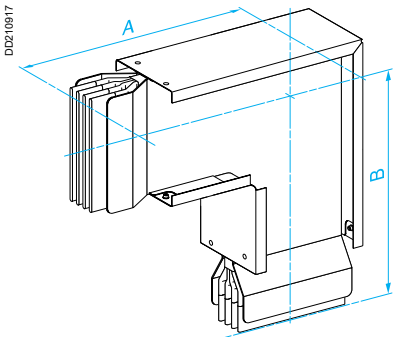

A and **B**: See "Changes of direction" in "Catalogue numbers and Dimensions".

Edgewise elbows

The nominal length of each branch is measured from the axis of the joint block to the axis of the other branch, in millimetres. The joint block axis is located 20 mm from the end of the bars.

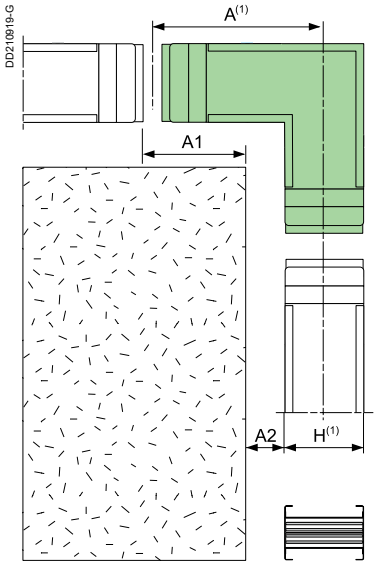

"**Edgewise**" elbow, external positioning
A = A1 + A2 + (H/2) - 20

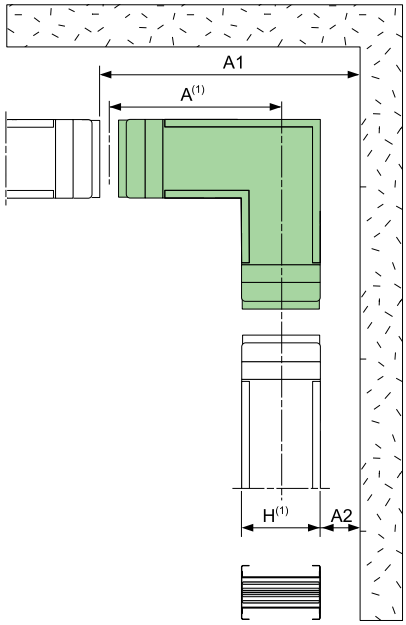

"**Edgewise**" elbow, internal positioning
A = A1 - A2 - (H/2) - 20

(1) See "Changes of direction" in "Catalogue numbers and Dimensions".

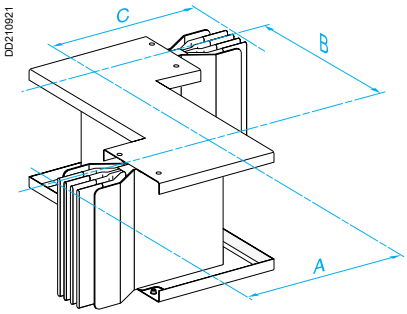

A, **B** and **C**: See "Changes of direction" in "Catalogue numbers and Dimensions".

Flat Zed

The nominal length of each branch is measured from the axis of the joint block to the axis of the other branch, in millimetres. The joint block axis is located 20 mm from the end of the bars.
The nominal length of the intermediary branch(es) is measured from the axis of one branch to the axis of another.

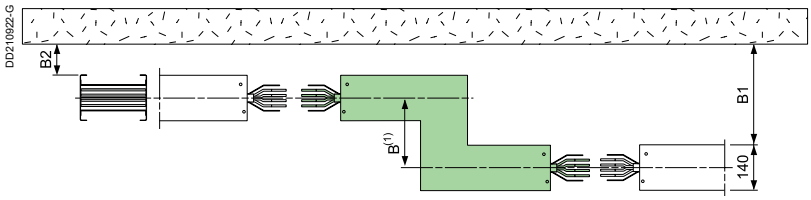

B = B1 - B2

(1) See "Changes of direction" in "Catalogue numbers and Dimensions".

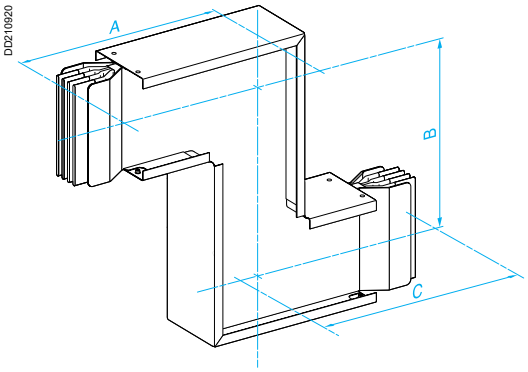

A, **B** and **C**: See "Changes of direction" in "Catalogue numbers and Dimensions".

Edgewise Zed

The nominal length of each branch is measured from the axis of the joint block to the axis of the other branch, in millimetres. The joint block axis is located 20 mm from the end of the bars.
The nominal length of the intermediary branch(es) is measured from the axis of one branch to the axis of another.

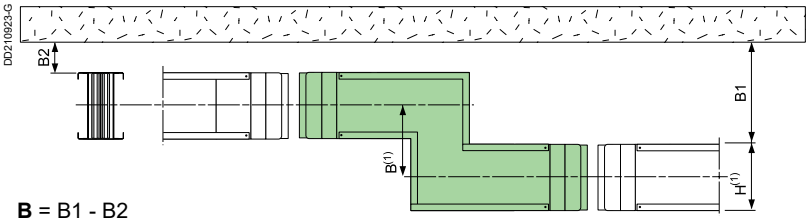

B = B1 - B2

(1) See "Changes of direction" in "Catalogue numbers and Dimensions".

Definition of final section parameters

Reminder: the final section should preferably be a straight section.
Take into account the neutral position when choosing the section.

Tools

Tape measure | Spirit level | Lead line | Stick

Ruler

Laser or infra-red reader

Their use

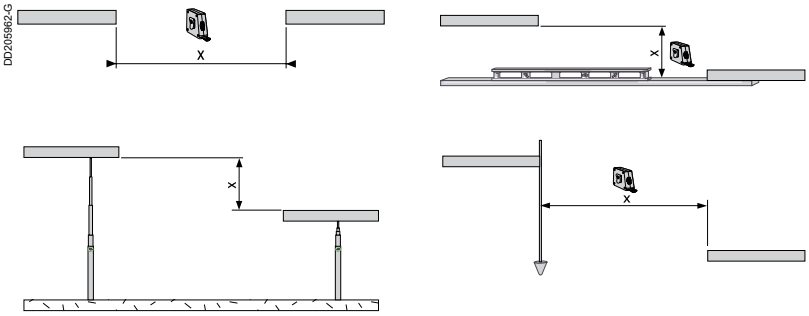

Canalis KTC

It is possible to combine the following in the same installation:
■ straight transport sections with straight sections containing fixed or plug-on tap-off points
■ straight sections of different lengths
■ straight sections with different numbers of fixed or plug-on tap-off points
■ …

PD202398_r

Positioning the tap-off units on the busbar trunking

Several configurations are possible.
Some examples:
■ on a 2000 mm straight section with plug-on tap-off points (KTC●●●●ED●20):
□ 3 x 160 A circuit breaker tap-off units:

DD210938

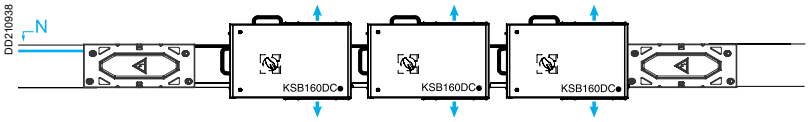

□ 1 x 400 A circuit breaker tap-off unit and 1 x 160 A circuit breaker tap-off unit

DD210936

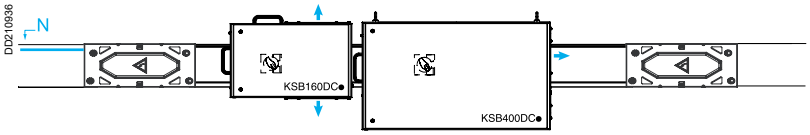

□ 3 x 160 A fuse tap-off units:

DD210939

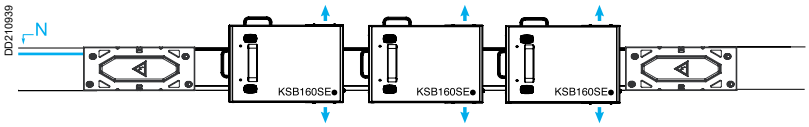

■ on a 4000 mm straight section with plug-on tap-off points (KTC●●●●ED●40):
□ 1 x 400 A circuit breaker tap-off unit, 1 x 250 A circuit breaker tap-off unit and 1 x 160 A circuit breaker tap-off unit:

DD210995

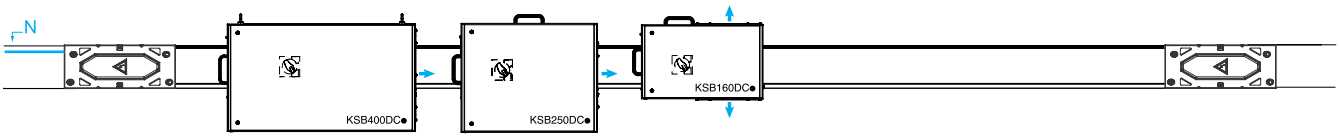

□ 1 x 400 A fuse tap-off unit, 1 x 250 A fuse tap-off unit and 1 x160 A fuse tap-off unit:

DD210996

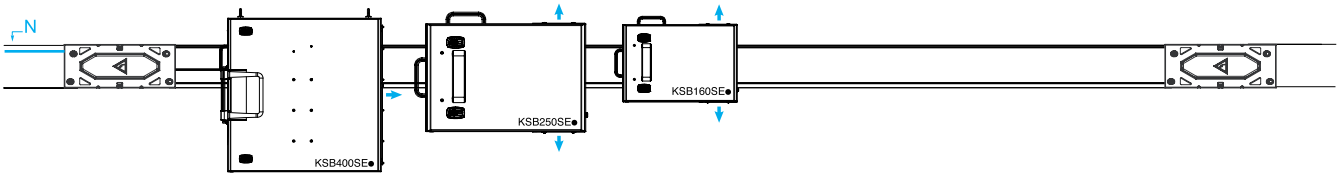

■ on a 4000 mm straight section with fixed tap-off points (KTB●●●●EB●40):
□ 1 x 400 to 630 A fixed tap-off unit and 1 x 800 to 1000 A fixed tap-off unit:

DD210937

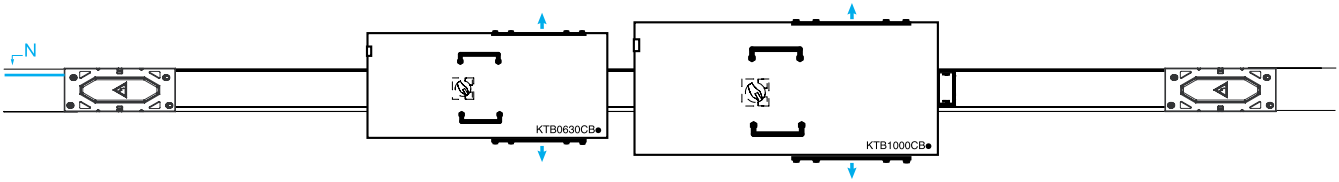

➔ Cable exit.

When the tap-off units have to be distributed along the length of the busbar trunking, use 2 metre sections and alternate the tap-off point positions.

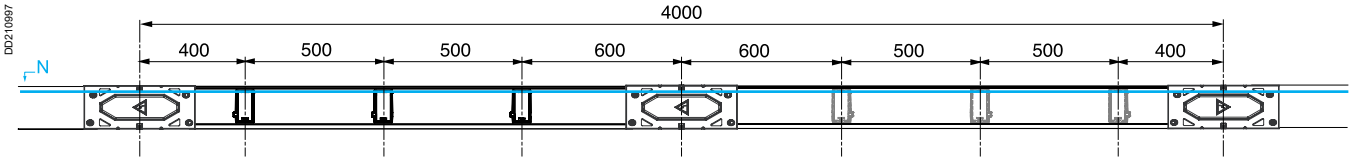

Recommendations for installing 2 parallel busbar trunking runs

For an installation with tap-off units, provide for a between centres distance that takes into account the minimum dimension of 100 mm and the dimensions A and B of the tap-off units.

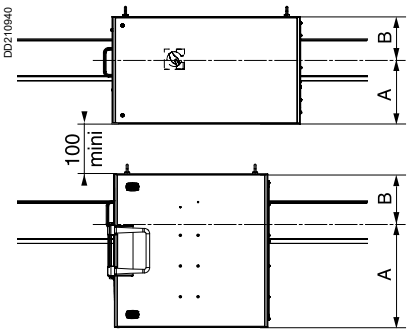

Type	Cat. no.	Dimensions (mm)	
		A	B
Circuit breaker tap-off units	KSB160DC●	160	150
	KSB250DC●	240	160
	KSB400DC●	240	160
	KTB0630CB●	175	175
	KTB1000CB●	275	275
Fuse tap-off units	KSB160SE●	150	150
	KSB250SE●	250	160
	KSB400SE●	440	160

Tap-off unit door opening

Provide for a minimum distance of 1000 mm between the busbar trunking and the ceiling to allow for the opening of tap-off unit doors.

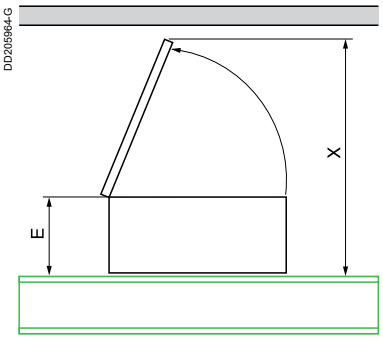

Type	Cat. no.	Dimensions (mm)	
		X	E (1)
Circuit breaker tap-off units	KSB160DC●	625.5	246
	KSB250DC●	726.5	300
	KSB400DC●	976,5	350
Fuse tap-off units	KSB160SE●	577,5	207
	KSB250SE●	777	258
	KSB400SE●	855	316

(1) With the handle.

Installing an isolator or run protective device

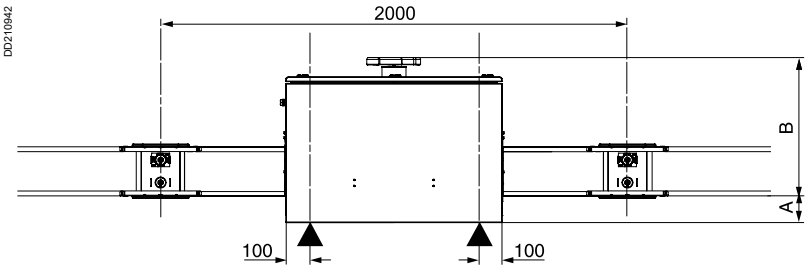

Rating (A)	Dimensions (mm)	
	A	B
1000	174	514
1350	159	529
1600	149	539
2000	129	559
2500	109	579
3200	89	599

Horizontal distribution
Checking and compensating for expansion

Canalis KTC

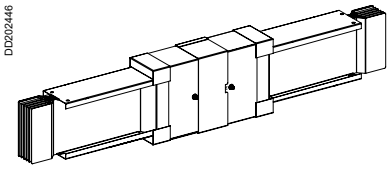

Expansion poses a problem when:
- the runs are made up of long straight sections
- when the busbar trunking passes through an expansion joint between two buildings.

Long part runs

Electrical busbar trunking can be subjected to a multitude of load variations during its service life (e.g. day / night, summer / winter) which cause temperature rise differences and thus variable expansions.
To absorb expansion in a Canalis KT busbar trunking, a specific section must be used: **the expansion section**.

Horizontal runs without tap-off units

If the busbar trunking length is greater than 30 metres, provide for expansion sections and appropriate blocking means. The ends and, in some cases, the centre of part runs must be blocked in order to direct the extensions towards the expansion sections.

Layout of expansion sections and blocking means for the following busbar trunking lengths:

- 0 to 30 metres:

- 31 to 60 metres:

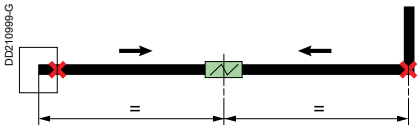

- 61 to 90 metres:

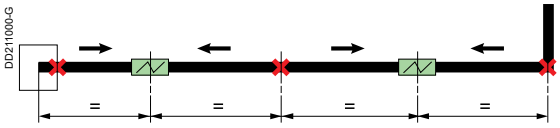

91 to 120 metres:

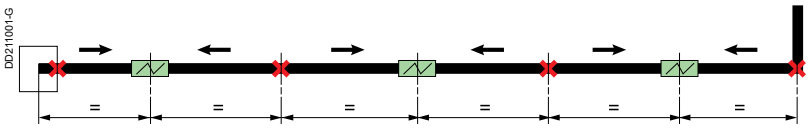

Blocked fixing supports
Expansion section
Direction of expansion

Horizontal runs with tap-off units

Layout of expansion sections and blocking means for the following busbar trunking lengths:

- 0 to 30 metres:

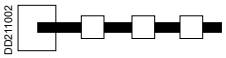

- 31 to 60 metres:

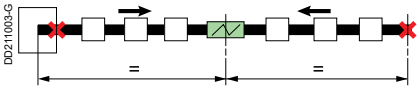

- 61 to 120 metres:

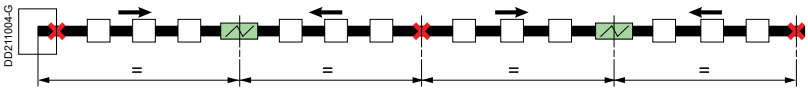

Blocked fixing supports
Expansion section
Direction of expansion
Tap-off unit

Transformer / switchboard links

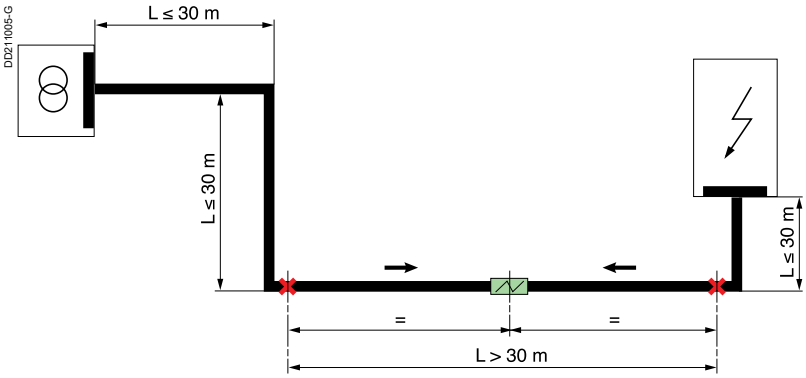

Blocked fixing supports
Expansion section
Direction of expansion

Horizontal distribution
Checking and compensating for expansion

Canalis KTC

Rules for fixing busbar trunking to the supports

For correct system operation, the expansion of the part run in question must be directed towards the expansion section.
This implies:
- the busbar trunking must be free from all longitudinal movement on its supports
- the expansion section must be blocked on the opposite side to that by which it is pushed.

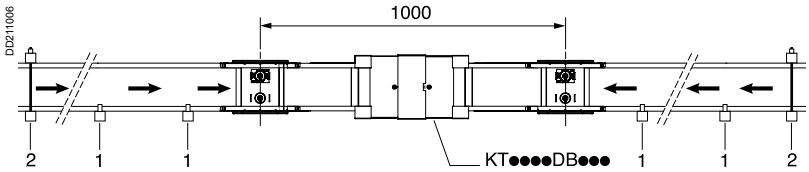

1 Free fixings
2 Blocked fixings
→ Direction of expansion

Installation of free fixings

Edgewise assembly

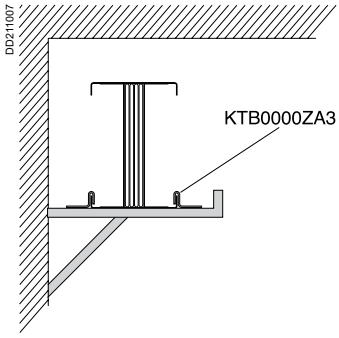

Flat assembly

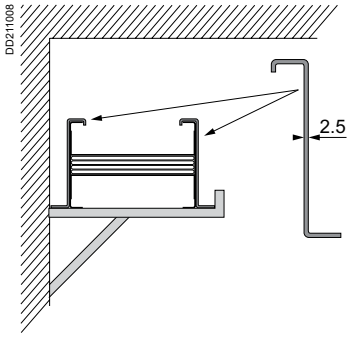

Installation of blocked fixings

Edgewise assembly

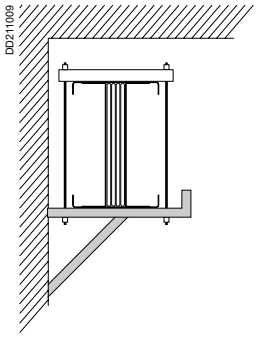

Flat assembly

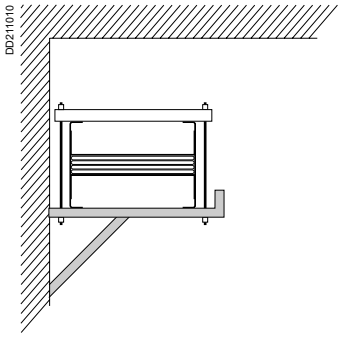

Passing through a joint between 2 buildings

Here, the expansion section allows the busbar trunking to absorb the forces due to the relative movement between the 2 buildings.

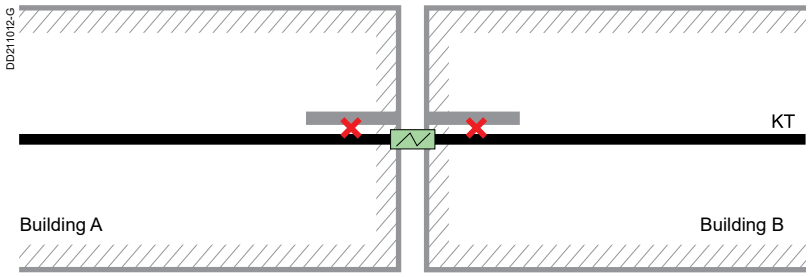

✕ Blocked fixing supports

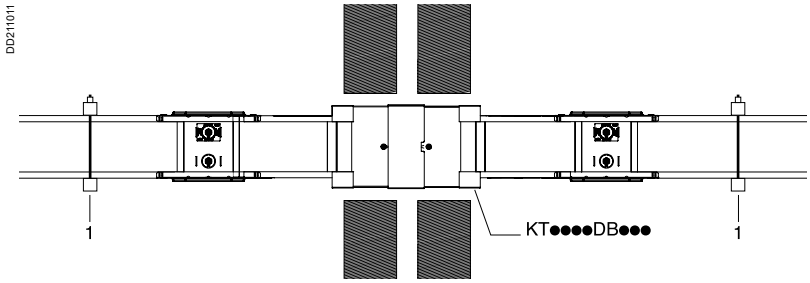

1 Blocked fixings

Installation of blocked fixings

Edgewise assembly

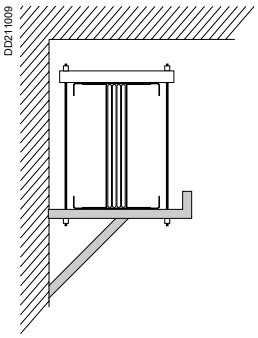

Flat assembly

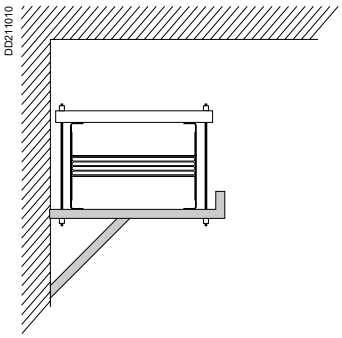

Canalis KTC

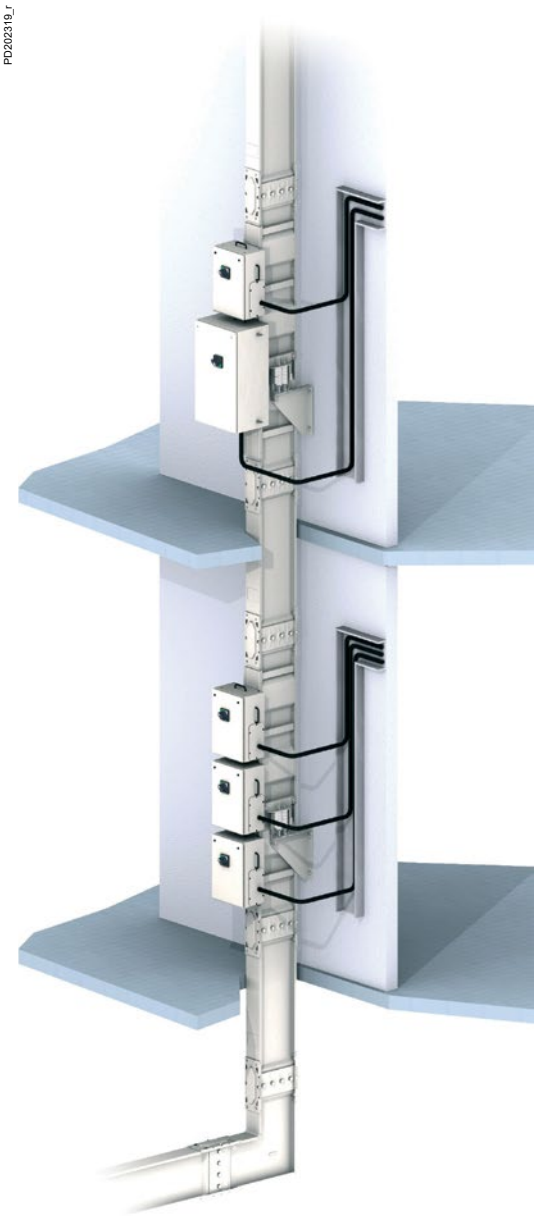

Canalis KT enables power distribution to each floor of multi-storey buildings (office buildings, hotels, hospitals, etc).
In this application, Canalis KT retains all its construction principles:

Vertically mounted, the protection degree of the KT busbar trunking is IP55 as standard.

Installing a rising main

1 Installation principle

Installation at each floor of:
- a 2 metre distribution section,
- a made to measure transport section to go through the floor slab,
- a busbar trunking support,
- up to 3 x 160 A tap-off units or a 250 or 400 A tap-off unit and a 160 A tap-off unit.

2 Installation feed

The installation feed is achieved using either a cable box or by direct connection to an electrical distribution switchboard.

3 Busbar trunking supports

The supports fix the vertical run section to the building structure. a floor slab support. It can be fixed to either the wall, to a wall bracket or directly to the floor, This type of fixing support has the following advantages:
- fitting to either the wall, to a wall bracket or directly to the floor
- height adjustment to make up for positioning errors
- depth adjustment from 50 to 100 mm
- spring adjustment to ensure distribution of the load at each floor
- absorption of building stresses with respect to the busbar trunking (expansion, vibration, etc) thanks to the springs.

4 Tap-off units

All Canalis KS tap-off units can be mounted vertically on the Canalis KT without the risk of interference with the supports.

Positioning the busbar trunking without external fire barrier

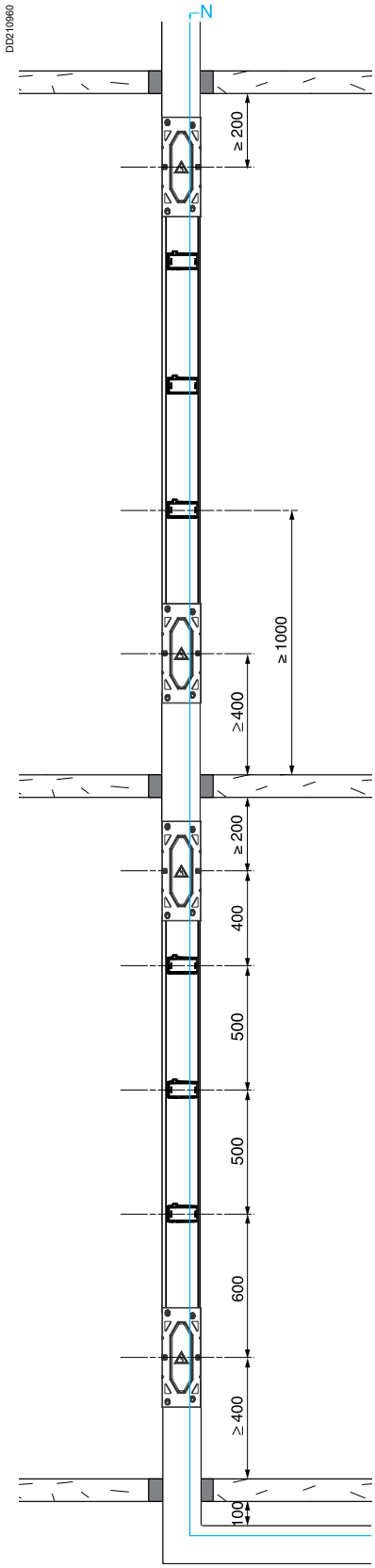

Positioning the neutral

The busbar trunking must be positioned with the neutral on the right.

Positioning the joint block

It is important the joint block is not positioned in the floor slab.

We recommend you provide for a distance of:

■ 400 mm between the floor slab and the joint block axis to be able to install a support to the wall or wall bracket to facilitate the re-filling of the hole and to cope with possible building faults (e.g. screed not indicated on the drawings). Provide 500 mm for a floor fixing.

■ 200 mm between the upper joint block and the ceiling to allow the busbar trunking to be boxed-in when filling-in the hole with plaster or concrete.

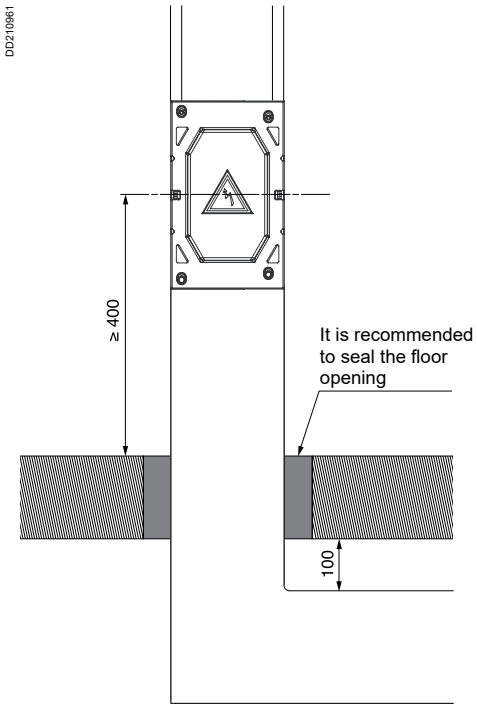

Positioning the tap-offs

The run sections are fitted with 3 tap-off points. Spaced at 500 mm intervals, they provide a high density of tap-offs per floor.

Edgewise passage through partition wall

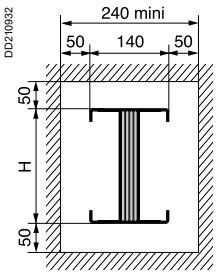

Flat passage through partition wall

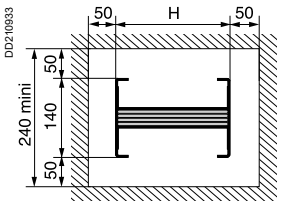

Rating (A)	1000	1350	1600	2000	2500	3200	4000	5000
Height H (mm)	74	104	124	164	204	244	324	404

Canalis KTC

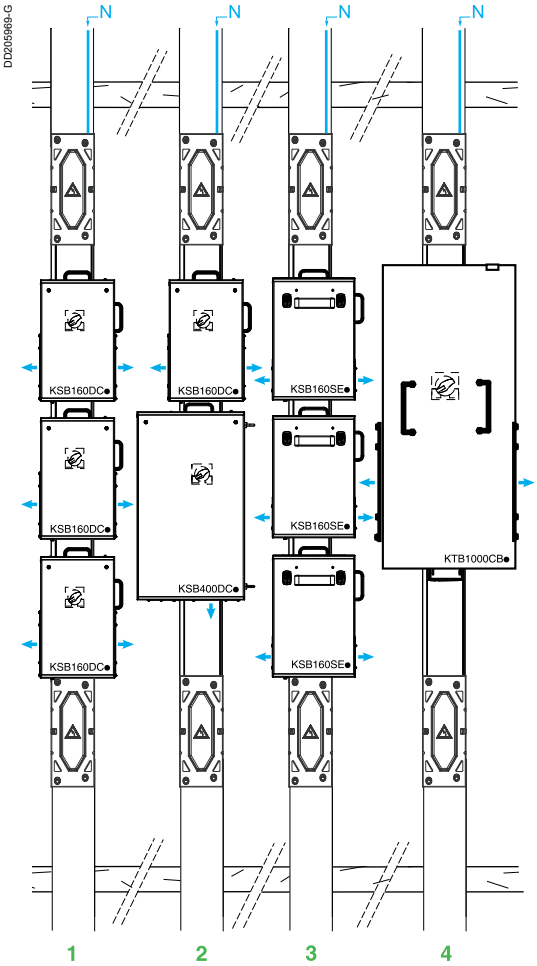

→ Cable exit.

Positioning the tap-off units on the busbar trunking

Several configurations are possible.
Some examples:
1 - 3 x 160 A circuit breaker tap-off units
2 - 1 x 400 A circuit breaker tap-off unit and 1 x 160 A circuit breaker tap-off unit
3 - 3 x 160 A fuse tap-off units
4 - 1 x 800 to 1000 A bolted tap-off unit.

Cable exit

R = 12 x Ø of cable

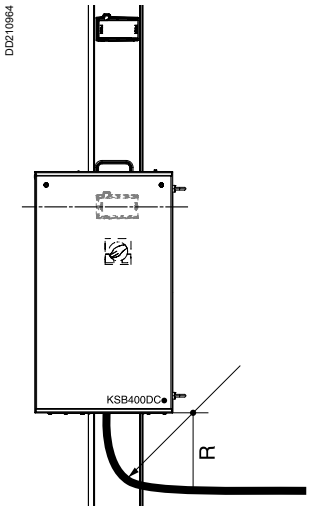

Recommendations for installing 2 rising mains in parallel

For an installation with tap-off units, provide for a between centres distance that takes into account the minimum dimension of 100 mm and the dimensions A and B of the tap-off units.

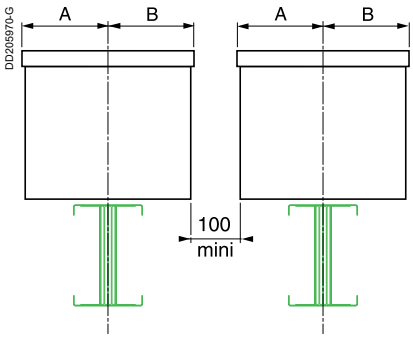

Type	Cat. no	Dimensions (mm)	
		A	B
Circuit breaker tap-off units	KSB160DC●	160	150
	KSB250DC●	240	160
	KSB400DC●	240	160
	KTB0630CB●	175	175
	KTB1000CB●	275	275
	KTB0630DC●	275	275
Fuse tap-off units	KSB160SE●	150	150
	KSB250SE●	250	160
	KSB400SE●	440	160
	KTB0630SD●	275	275

Tap-off unit door opening

If installed in a technical room, provide for a minimum distance of 1000 mm between the busbar trunking and the wall in order to be able to open the doors of the tap-off units.

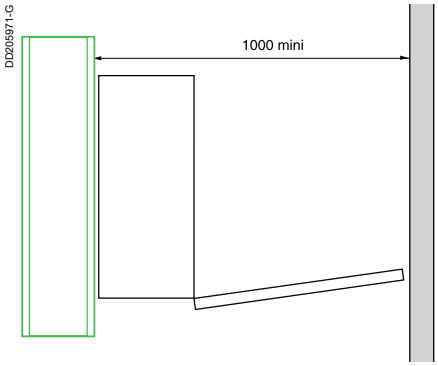

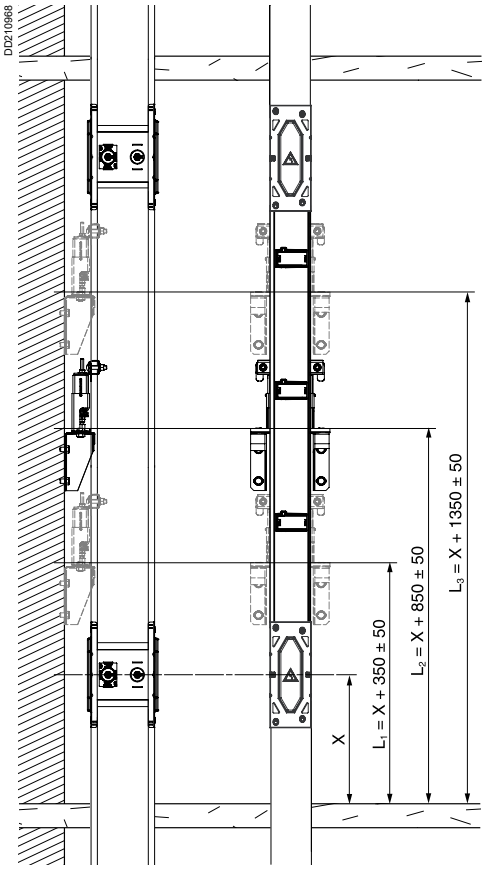

X ⩾ 400.

Spring hangers vertical supports KTB●●●●ZA5● are designed for buildings with an average gap between floors of 3 to 4 meters between each floor.
- If these distance is punctually reduced or increased (Max 5 meters with no more than 1 element without support in between) additional supports should then be added to fit a good column consistency. The average distance between supports should stay between 3 to 4 meters.
- Also, a distribution element with high rating tap offs (630 A and more) should have a spring hanger on its length.

2 fixing systems are available:
- a rear wall fixing system for 800 A to 1600 A busbar trunking
- a side wall fixing system for 2000 A to 4000 A busbar trunking.

Wall support

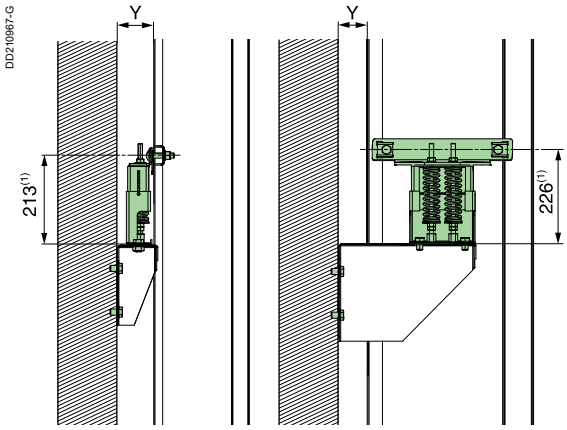

1000 to 2000 A 2500 to 5000 A

Wall drilling drawing to fix the support.

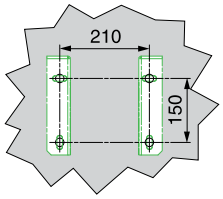

(1) Dimensions with free springs.
Y: 50 mm minimum to 100 mm maximum

Wall bracket support (if Y > 100 mm)

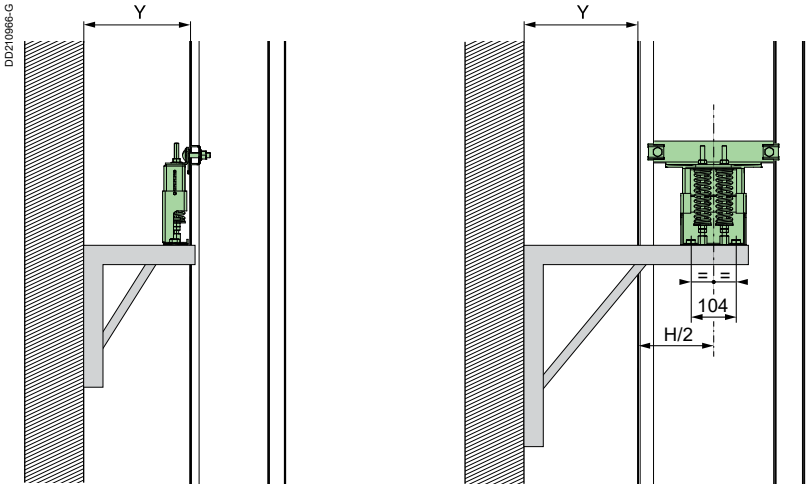

1000 to 2000 A 2500 to 5000 A

Rating (A)	2500	3200	4000	5000
Height H (mm)	204	244	324	404

Floor support

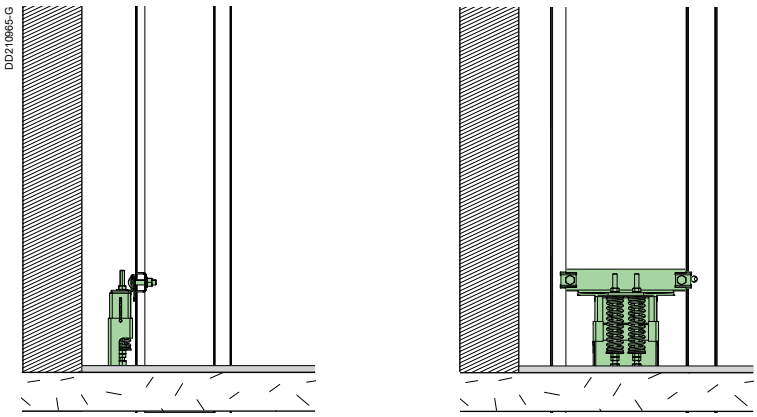

1000 to 2000 A 2500 to 5000 A

Canalis KTC

The filler material around the busbar trunking must meet the requirements currently in force to guarantee that the wall and ceiling fire-resistance class (for example DIN 1045 and DIN 1053-1) is maintained. Filler material not supplied.

Vertical mounting

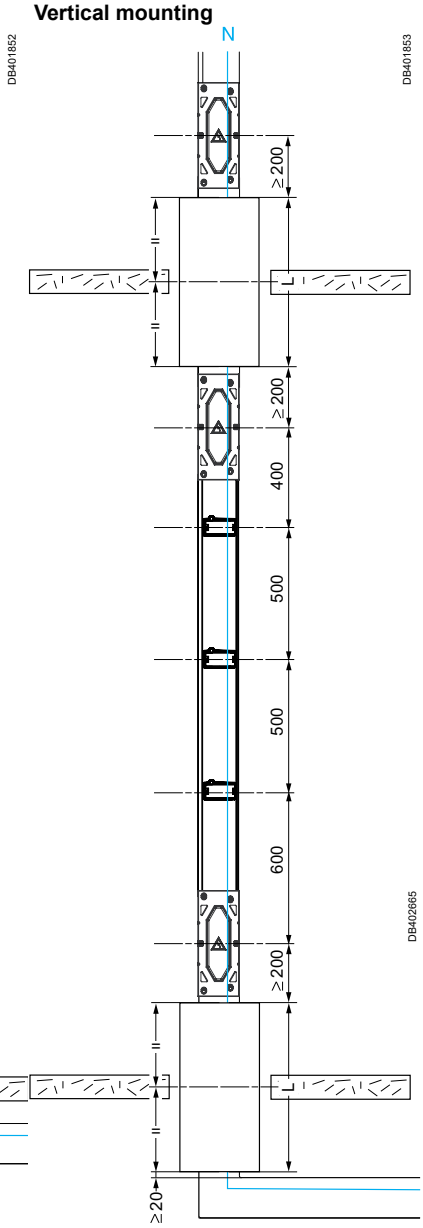

Horizontal mounting

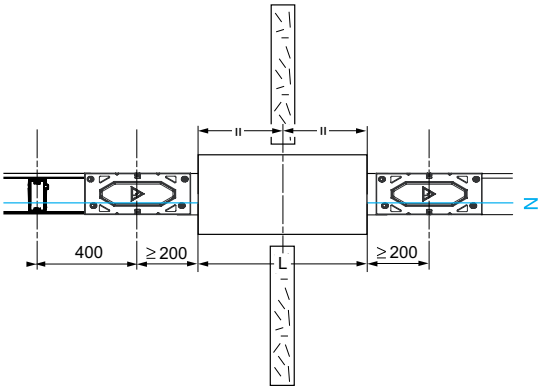

Rating	L
KTC1000	650
KTC1250	650
KTC1600	650
KTC2000	750
KTC2500	750
KTC3200	750
KTC4000	950
KTC5000	950
KTC6300	750

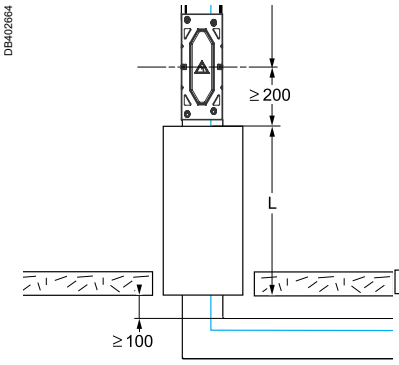

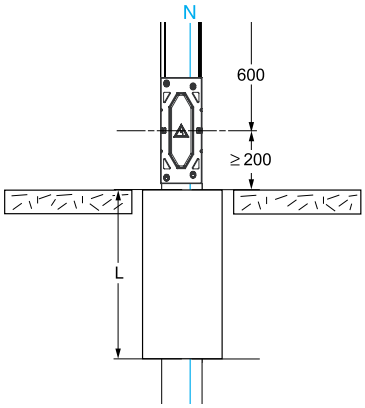

Edgewise passage through partition wall

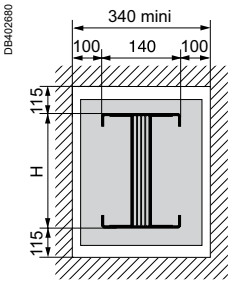

Flat passage through partition wall

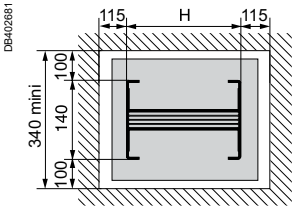

Distances to comply

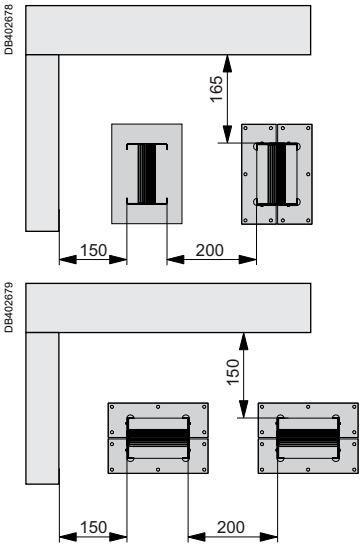

Installation with feed via a cable box or direct onto the switchboard

2 possibilities:
- installation with feed direct to the switchboard
- installation with feed via a cable box.

Installation with feed via a cable box

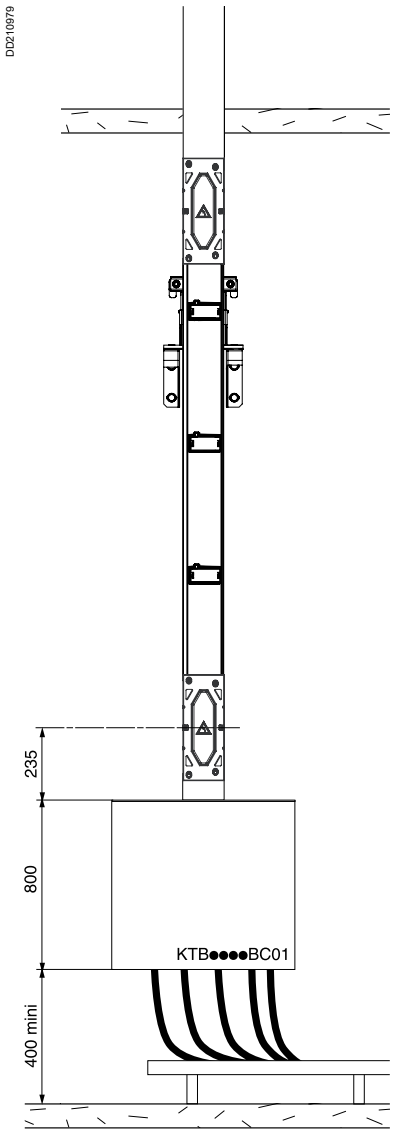

Rising mains

Installation with feed via a cable box or direct onto the switchboard

Canalis KTC

Installation with feed direct to the switchboard

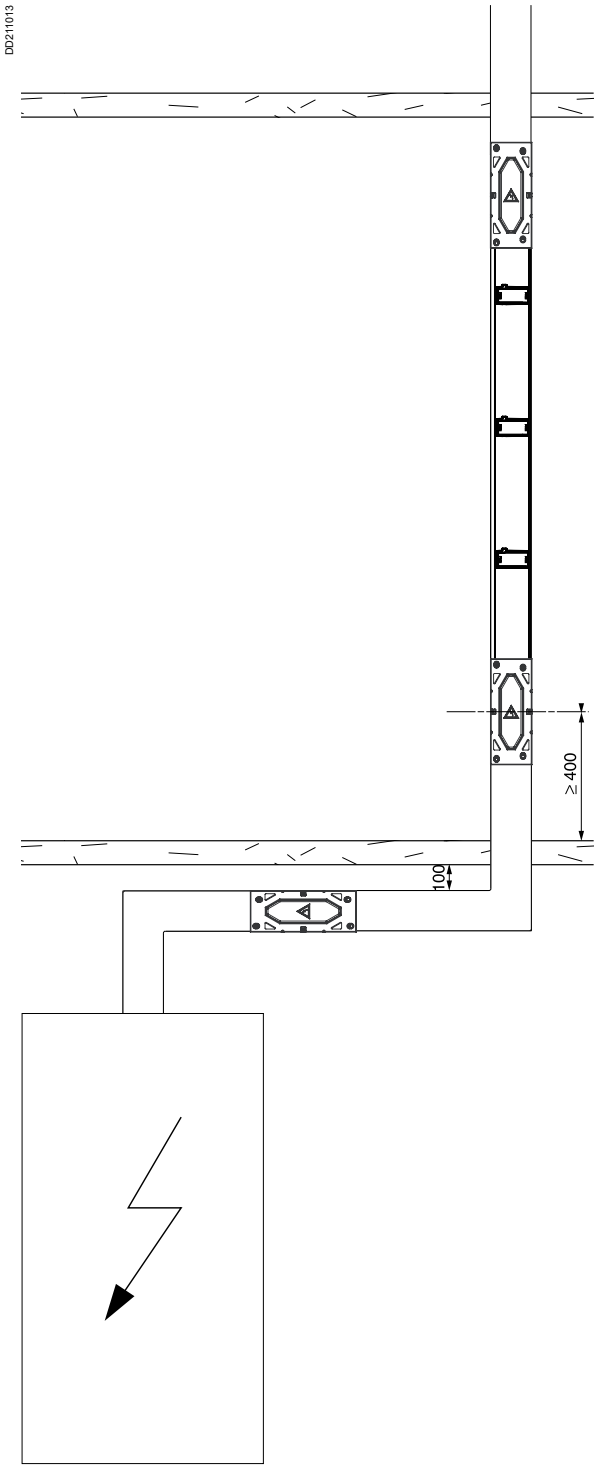

Canalis KTC

The Schneider Electric system

The comprehensive Schneider Electric system makes it simple to design a complete transformer/Canalis KT/switchboard installation.
Using dedicated interfaces, the trunking connects directly to the dry-type transformer and the switchboard for:
- ■ tested and standardised connections
- ■ fast and flexible installation
- ■ shorter lead times.

Advantages
- ■ No design work for the connections.
- ■ Simplified layout design:
  - □ pre-defined position of the jointing unit
  - □ simplified routing (only three dimensions required)
  - □ smaller size (no additional covers required).
- ■ Transformer and switchboard supplied with connections already mounted.
- ■ Short lead times and fewer catalogue numbers for connections.
- ■ Adaptable on the worksite:
  - □ transformer end: ± 15 mm adjustments along all three axes
  - □ switchboard end: phases can be inverted.
- ■ Continuity of service:
  - □ transformer can be replaced in less than one hour
  - □ transformer, trunking and switchboard designed to be used together.
- ■ Safety:
  - □ trunking fully tested in compliance with IEC 61439-1 and 61439-6
  - □ compliance with standards and installation rules
  - □ excellent fire-withstand capability.
- ■ Comfort:
  - □ low level of electromagnetic radiation
  - □ no noise.

Compatibility between Trihal transformers/Canalis KT/PrismaSeT or Okken switchboards (1)

Trihal transformers					PrismaSeT or Okken switchboards							
					NS-MTZ1/NT-MTZ2/NW circuit breakers				NS-MTZ2/NW circuit breakers			MTZ2/NW circuit breakers
Rating	Naturally ventilated (AN) dry-type transformers Ie max.	Forced ventilated (AF) dry-type transformers, 25 % overload accepted Ie max.	Interfaces		800 A	1000 A	1250 A	1600 A	2000 A	2500 A	3200 A	4000 A
					08/16				20/25		32	40
				Junctions	H164				H244		H404	H404
630 kVA	887 A	1109 A	n°1	H124	KTC1000, KTC1350, KTC1600	KTC1000, KTC1350, KTC1600	KTC1000, KTC1350, KTC1600	KTC1000, KTC1350, KTC1600	-	-	-	-
800 kVA	1126 A	1408 A	n°2	H164	KTC1350, KTC1600, KTC2000	KTC1350, KTC1600, KTC2000	KTC1350, KTC1600, KTC2000	KTC1350, KTC1600, KTC2000	KTC2000	KTC2000	-	-
1000 kVA	1408 A	1760 A	n°3	H204	KTC1600, KTC2000	KTC1600, KTC2000	KTC1600, KTC2000	KTC1600, KTC2000	KTC2000, KTC2500	KTC2000, KTC2500	-	-
1250 kVA	1760 A	2200 A	n°4	H244	-	-	-	-	KTC2000, KTC2500, KTC3200	KTC2000, KTC2500, KTC3200	-	-
1600 kVA	2253 A	2816 A	n°5	H324					KTC2500, KTC3200	KTC2500, KTC3200	KTC3200, KTC4000	KTC3200, KTC4000
2000 kVA	2813 A	3516 A	n°6	H404	-	-	-	-	-	-	KTC3200, KTC4000, KTC5000	KTC3200, KTC4000, KTC5000
2500 kVA	3520 A	4400 A	n°7	H404	-	-	-	-	-	-	KTC4000, KTC5000	KTC4000, KTC5000

(1) The compatibilities indicated correspond to the electrical connection possibilities; in all cases, coordination between circuit breaker and electrical busbar trunking must be checked.

Connection to a dry-type transformer using a dedicated interface, see page 224.

Connection to an LV switchboard using a dedicated interface, see page 210.

Panorama of connection solutions

Connection to LV switchboards
Selection guide

Canalis KTC

This guide may be used to:
■ select the connection best suited to your installation (incoming direction, trunking installed flat or edgewise, different phase order)
■ check the total height of the connection with respect to the ceiling, i.e. dimension Z0 + Z2 (100 mm minimum clearance required between top of connection and ceiling)
■ optimise the connection by ensuring that $(Z0 + Z1)_{switchboard} = (Z0 + Z1)_{transformer}$ to avoid having to use elbows and zed units
■ position the fixing devices used to support the trunking.

DB411148

Type of connection	Connection with an interface		Direct connection
			Without protective covers
	SB1	SB2	SB3
	DD21v0753 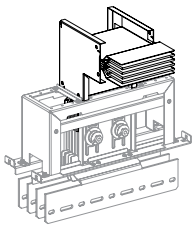	DD210754 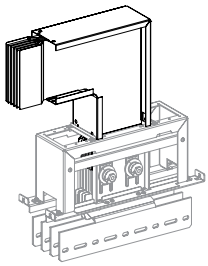	DD210755 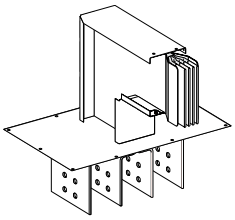
	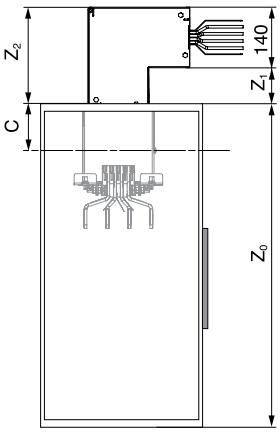	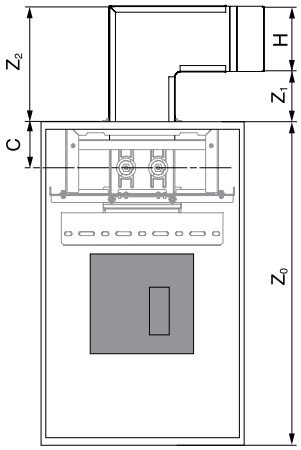	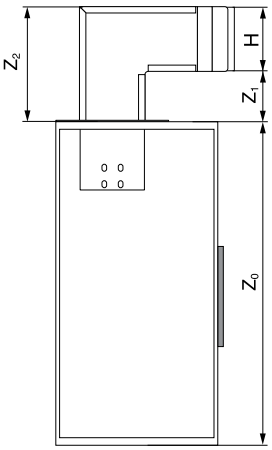
Z_0	see page 210	see page 210	As per manufacturing drawings
Z_1 minimum	74	82	138
maximum	-	-	472
Z_2	Z_1 + 140	Z_1 + H	Z_1 + H
Phase order can be changed	■	■	
Mounting in workshop	■	■	
Exit through front or rear	■		■
Exit through left or right side		■	
Edgewise installation		■	■
Flat installation	■		

Trunking cross-section

Rating (A)	1000	1350	1600	2000	2500	3200	4000	5000	6300
Height H (mm)	74	104	124	164	204	244	324	404	244 / 130 / 244
Width W (mm)	140	140	140	140	140	140	140	140	140

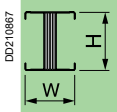

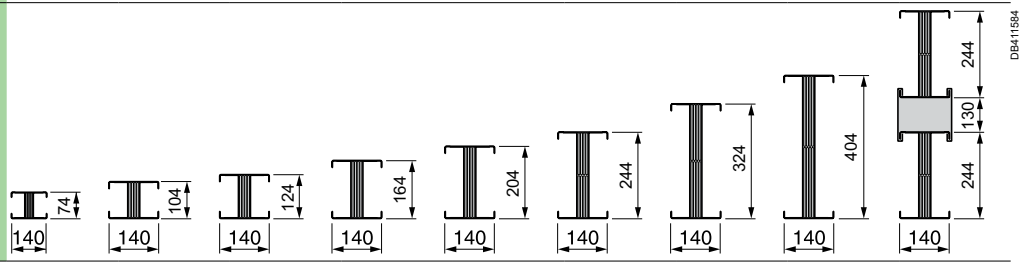

	SB4	SB5	SB6	With protective covers SB7	
	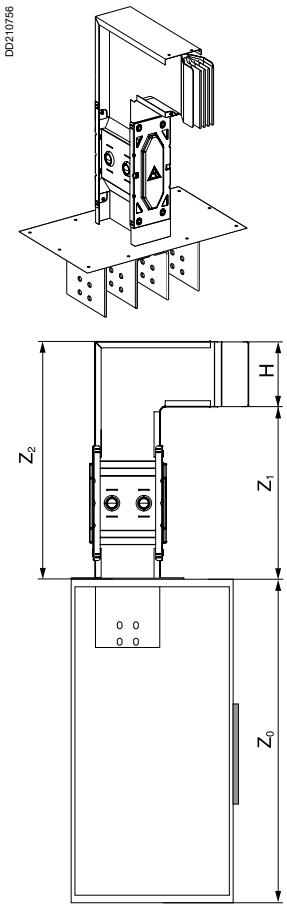	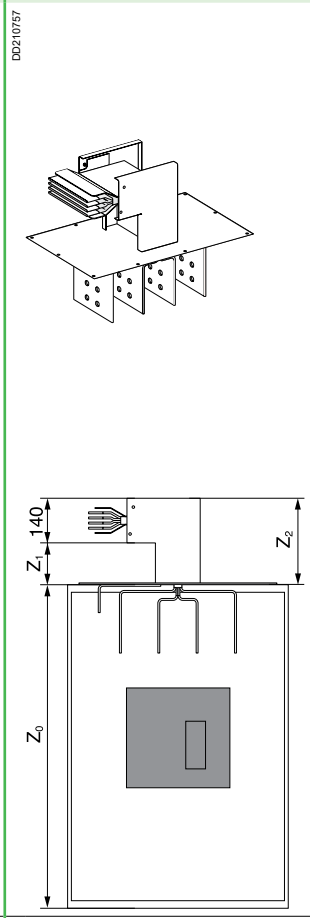	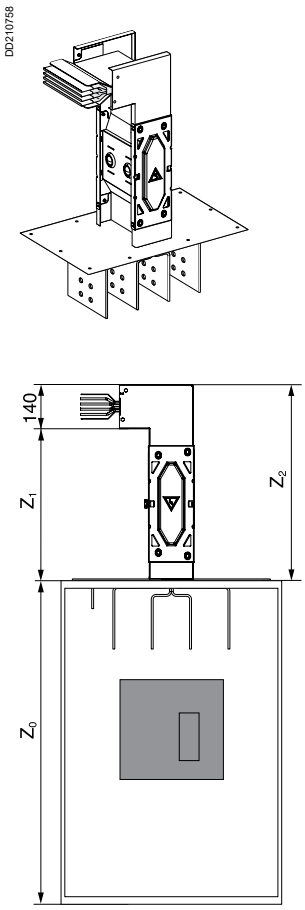	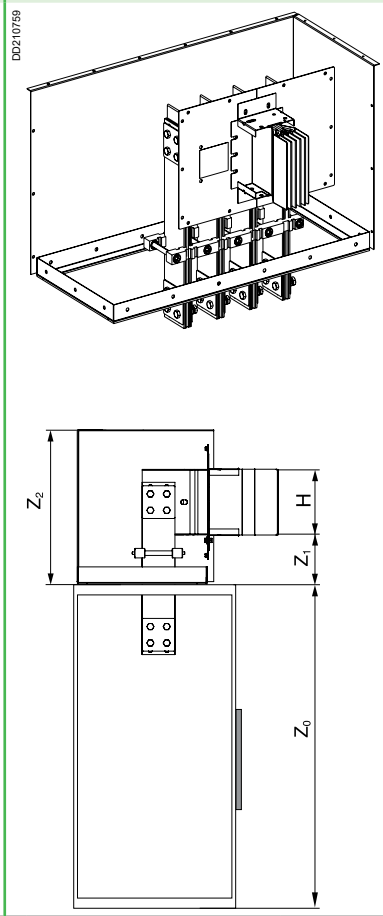	
	As per manufacturing drawings	As per manufacturing drawings	As per manufacturing drawings	As per manufacturing drawings	
	473	130	465	H = 74 to 124 mm	195 - H/2
				H = 164 to 244 mm	255 - H/2
				H = 324 to 404 mm	355 - H/2
	-	464	-	-	
	Z_1 + H	Z_1 + 140	Z_1 + 140	H = 74 or 104 or 124 mm	Z_1 + H/2 + 115
				H = 164 or 204 or 244 mm	Z_1 + H/2 + 175
				H = 324 or 404 mm	Z_1 + H/2 + 255
	■		■		
	■			■	
		■	■		
	■			■	
		■	■		

Connection to LV switchboards
By Canalis interface

Canalis KTC

Switchboards can be equipped with connections for Canalis KT. Jointing with the switchboard is via a standard run component (straight length, elbow, etc.) and a jointing unit (identical to those used between line components). The trunking enters the switchboard via the top (roof).

Switchboard connections are available from 800 to 6300 A.

Type of switchboard	Rating of trunking (A)	Type of circuit breaker	Type of connection
Prisma**SeT**	800 to 1600	Compact NS	Top direct and rear
		Masterpact MTZ1/NT	Top direct and rear
	800 to 3200	Masterpact MTZ2/NW	Top direct and rear
	4000	Masterpact MTZ2/NW	Rear
Okken	800 to 4000	Masterpact MTZ2/NW	Top direct and rear
	6300	Masterpact MTZ3/ NW40b-50	Rear

Connections are tested and qualified under normal operating conditions in terms of temperature rise (Δθ) and short-circuit currents (Isc).

The panel builder receives and connects the Canalis KT interface in the workshop. The phase order at the interface output can be adapted if necessary (this information must be forwarded to the panel builder).
The switchboard is then delivered to the site and the trunking can be rapidly connected using a simple jointing unit with torque nuts to ensure the correct tightening torque.

Compatibility between Canalis KT and the interface in the switchboard[(1)(2)]

Canalis KT				Circuit breakers in Okken and PrismaSeT switchboards							
				NS - MTZ1/NT - MTZ2/NW			NS - MTZ2/NW			MTZ2/NW	MTZ3/NW
Cat. no.	Rating (A)	Height (mm)	Sealing kit	800 and 1000 A	1250 A	1600 A	2000 A	2500 A	3200 A	4000 A	5000 A
				Interface 08/16			Interface 20/25		Interface 32	Interface 40	Interface 40b-63
				H164[(3)]			H244[(3)]		H404[(3)]	H404[(3)]	H622[(3)(4)]
KTC1000	1000	74	KTB0074TT01								
KTC1350	1350	104	KTB0104TT01								
KTC1600	1600	124	KTB0124TT01								
KTC2000	2000	164	KTB0164TT01								
KTC2500	2500	204	KTB0204TT01								
KTC3200	3200	244	KTB0244TT01								
KTC4000	4000	324	KTB0324TT01								
KTC5000	5000	404	KTB0404TT01								
KTC6300	5000	622	KTB0622TT01								

(1) The compatibilities indicated correspond to the electrical connection possibilities; in all cases, coordination between circuit breaker and electrical busbar trunking must be checked.
(2) Coordination with a dry-type transformer, see the "Transformer" section, see page 224.
(3) Height of the jointing unit in millimetres.
(4) Connection only to Okken interface.

The prefabricated connections installed in the switchboard are designed to operate without derating and can therefore operate at the rated circuit-breaker current.

Phase order

Using the dedicated interface, it is possible to change the phase order if it is different between the trunking and the switchboard.

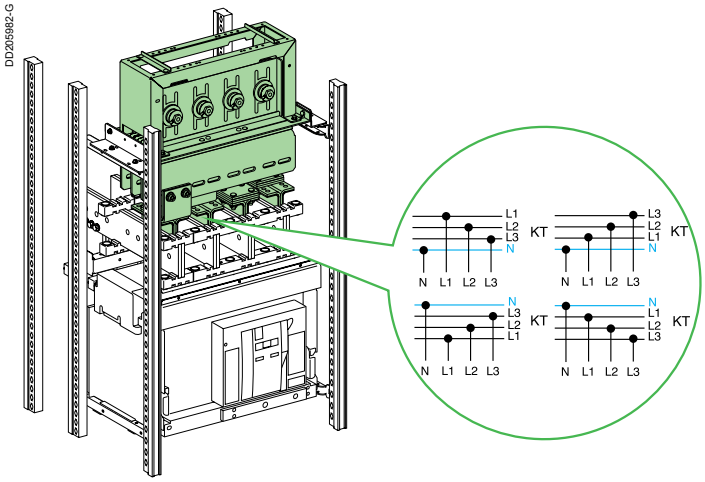

Top direct connection (TDC)

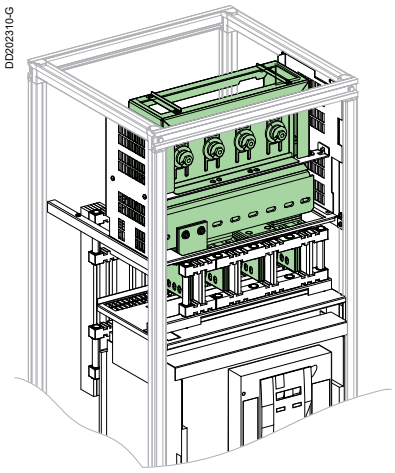

To 800 to 4000 A Masterpact MTZ2/NW circuit breakers
■ Enclosure 600 or 1000 mm deep, access through the front.

Position of the jointing unit

Circuit breaker		Dimensions (mm)		
		A	B	C
Drawout, 3P/4P (1)	MTZ2/NW 08/16	175	325	156
	MTZ2/NW 20/25	175	325	156
	MTZ2/NW 32	175	325	156
	MTZ2/NW 40	175	325	156

(1) To order, see "Catalogue numbers", page 77.

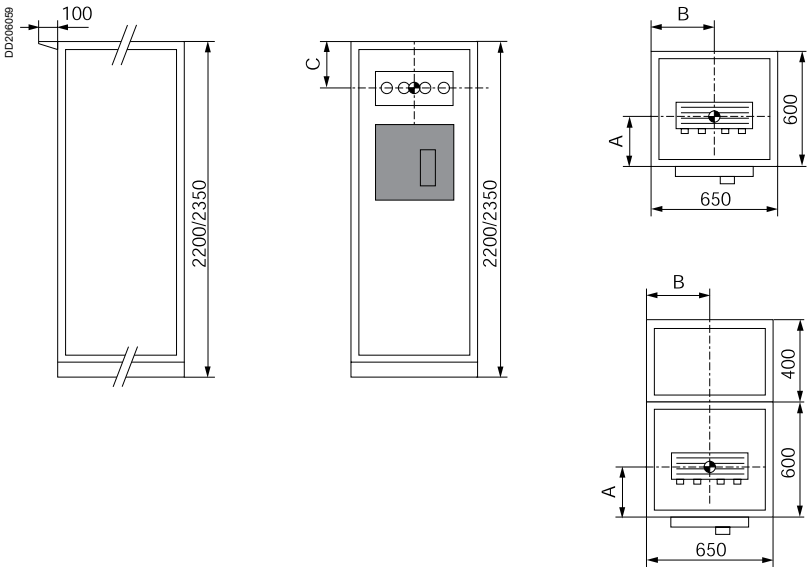

Reference point

Connection to LV switchboards

By Canalis interface

Connection to Okken switchboards

Canalis KTC

Rear connection (RC)

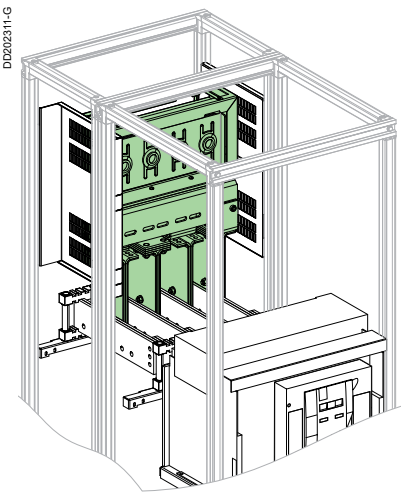

To 800 to 6300 A Masterpact MTZ2/NW circuit breakers

■ Enclosure 1000, 1200 or 1400 mm deep, access through the rear.

Position of the jointing unit

Circuit breaker		Dimensions (mm)						
		A			B		C	
		Depth (mm)			Width (mm)		Height (mm)	
		1000	1200	1400	650	1150	2350	2200
Drawout, 3P/4P[1], top position	MTZ2/NW 08/16	825	-	-	363	-	317	-
	MTZ2/NW 20/25	825	-	-	363	-	317	-
	MTZ2/NW 32	825	-	-	363	-	317	-
	MTZ2 (3/4P)/ NW40 (3P)	-	953	1196	363	-	156	-
	NW40 (4P)	-	953	1196	363	-	381	-
	MTZ3 NW40b	800 (SHBB only)	1033	1200	-	575	174	-
	MTZ3 NW50	800 (SHBB only)	1033	1200	-	575	174	-
	MTZ3 NW63	800 (SHBB only)	1033	1200	-	575	174	174
	115-3 NW40	-	953	1196	363	-	156	-
	115-4 NW40	-	953	1196	363	-	381	-
Drawout, 3P/4P[1], medium position	MTZ2/NW 08/16	825		-	363	-	942	-
	MTZ2/NW 20/25	825		-	363	-	942	-
	MTZ2/NW 32	825		-	363	-	942	-
	MTZ2 (3/4P)/ NW40 (3P)	-	953	1196	363	-	881	-
	NW40 (4P)	-	953	1196	363	-	1008	-
	115-3 NW40	-	953	1196	363	-	881	-
	115-4 NW40	-	953	1196	363	-	1006	-
Drawout, 3P/4P[1], bottom position	MTZ2/NW 08/16	-	-	1225	363	-	1417	-
	MTZ2/NW 20/25	-	-	1225	363	-	1417	-
	MTZ2/NW 32	-	-	1225	363	-	1417	-
	MTZ3 NW40b	800	964	1200	-	575	2065	1913
	MTZ3 NW50	800	964	1200	-	575	2065	1913
	MTZ3 NW63	800	964	1200	-	575	2068	1915

(1) To order, see "Catalogue numbers", page 77.

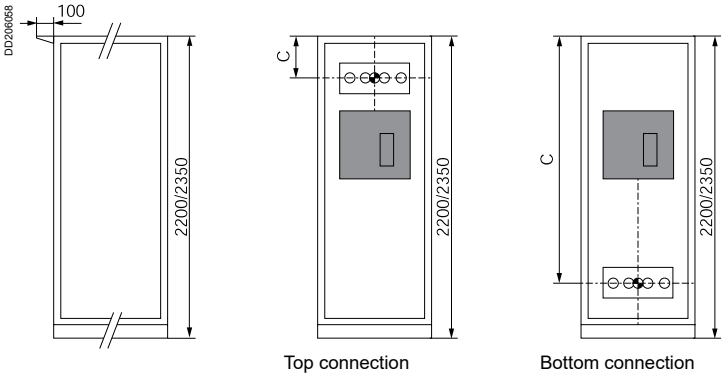

Top connection

Bottom connection

Top views
Depth: 1000 mm

Depth: 1200 mm

Depth: 1400 mm

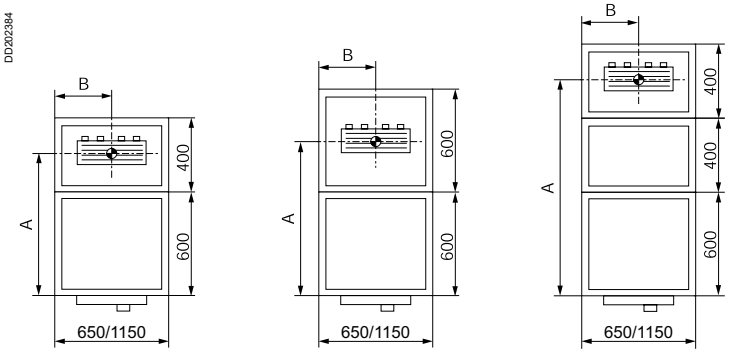

Reference point

Bottom connection

For installations with connections through the bottom, please consult us.

Top direct connection (TDC)

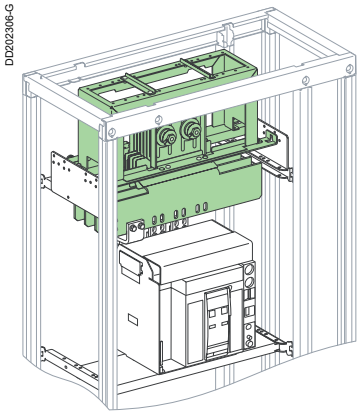

To a Compact NS1250 or Masterpact MTZ1/NT 1600 circuit breaker
■ Enclosure 400 mm deep, access through the front.

Position of the jointing unit

Circuit breaker		Dimensions(1) (mm)		
		A	B	C
Fixed, 3P/4P(2)	NS800/1250	260	325	173
	MTZ1/NT 06/16	260	325	173
Drawout, 3P/4P(2)	NS800/1250 or 06/MTZ1/NT 16	260	325	198

(1) Dimensions measured from switchboard framework.
(2) To order, see "Catalogue numbers", page 75.

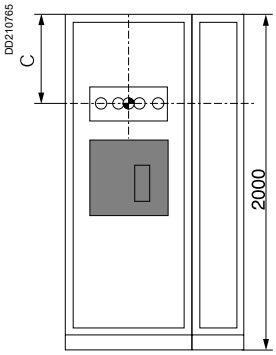

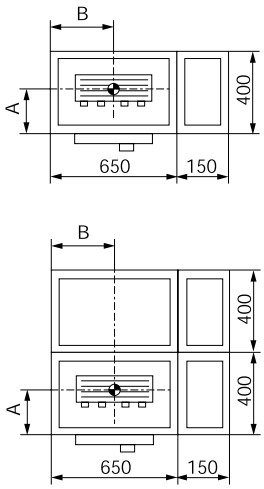

Reference point

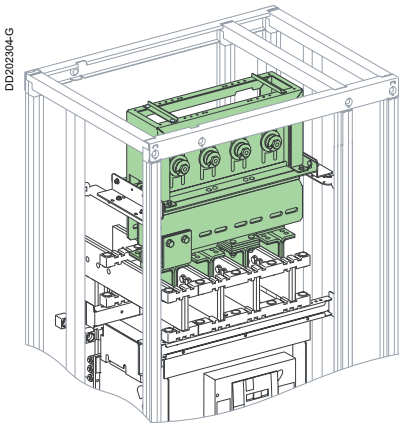

To 800 to 6300 A Masterpact MTZ2/MTZ3/NW circuit breakers
■ Enclosure 600 mm deep, access through the front.

Position of the jointing unit

Circuit breaker		Dimensions(1) (mm)		
		A	B	C
Fixed, 3P/4P(2)	MTZ2/NW 08/16	185	325	254
	MTZ2/NW 20/25	185	325	304
	MTZ2/NW 32	185	325	279
Drawout, 3P/4P(2)	MTZ2/NW 08/16	185	343	179
	MTZ2/NW 20/25	185	343	196
	MTZ2/NW 32	185	343	214
	MTZ3/NW40b-63 A	555	600	174

(1) Dimensions measured from switchboard framework.
(2) To order, see "Catalogue numbers", page 74.

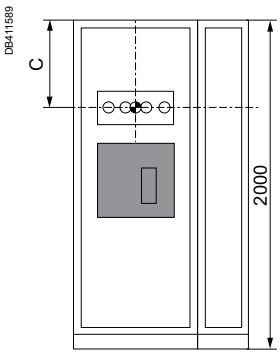

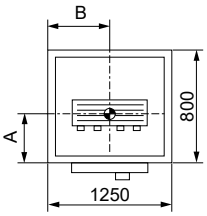

For MTZ3/NW40b-63

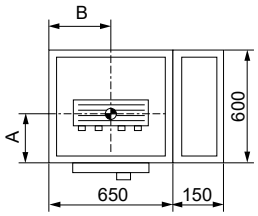

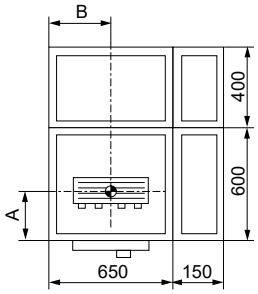

Reference point

Connection to LV switchboards
By Canalis interface
Connection to Prisma**SeT** switchboards

Canalis KTC

Rear connection (RC)

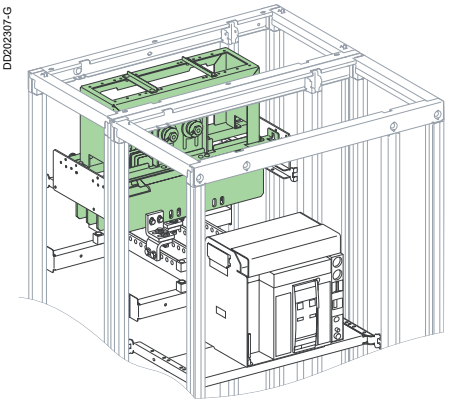

To a Compact NS1600 or Masterpact MTZ1/NT 1600 circuit breaker
- ■ Two enclosures combined:
- □ 1 enclosure, 400 mm deep, for the circuit breaker
- □ 1 enclosure, 400 mm deep, for the Canalis KT/switchboard interface.

Position of the jointing unit

Circuit breaker		Dimensions (1) (mm)		
		A	B	C
Fixed, 3P/4P (2)	NS800/1600 or MTZ1/NT 06/16	638	325	219
Drawout, 3P/4P (2)	NS800/1600 or MTZ1/NT 06/16	638	325	269

(1) Dimensions measured from switchboard framework.
(2) To order, see "Catalogue numbers", page 75.

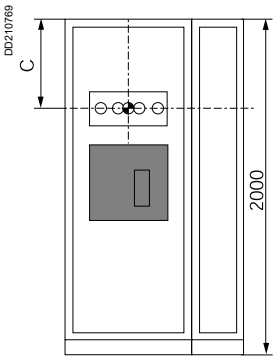

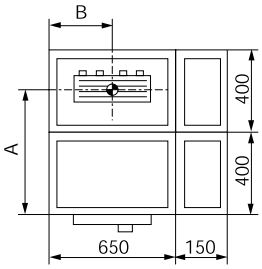

Reference point

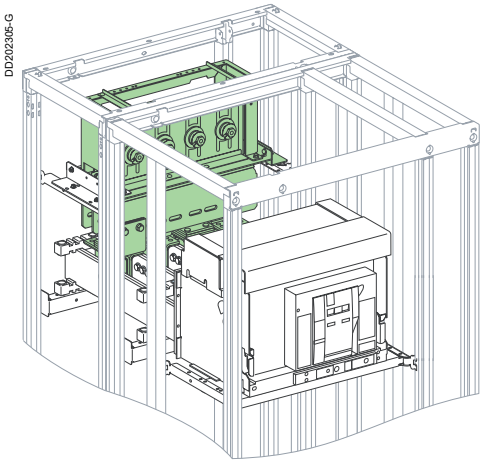

To 800 to 4000 A Masterpact MTZ2/NW circuit breakers
- ■ Two enclosures combined:
- □ 1 enclosure, 600 mm deep, for the circuit breaker
- □ 1 enclosure, 400 mm deep, for the Canalis KT/switchboard interface.

Position of the jointing unit

Disjoncteur		Dimensions (1) (en mm)		
		A	B	C
Fixed, 3P/4P (2)	MTZ2/NW 08/16	815	325	279
	MTZ2/NW 20/25	815	325	279
	MTZ2/NW 32	815	325	279
	MTZ2/NW 40	1041	351	474
Drawout, 3P/4P (2)	MTZ2/NW 08/16	815	307	279
	MTZ2/NW 20/25	815	307	279
	MTZ2/NW 32	815	307	239
	MTZ2/NW 40	1041	351	524

(1) Dimensions measured from switchboard framework.
(2) To order, see "Catalogue numbers", page 74.

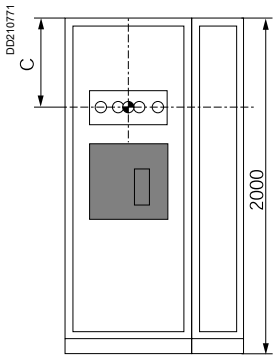

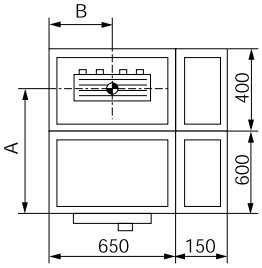

Reference point

Sealing kit

The sealing kit must be ordered with the KT trunking. The size of the trunking determines that of the sealing kit. For the different types of kit, see the "Catalogue numbers and dimensions" pages.
The kit includes a drilling and cut-out drawing for the switchboard roof.

DD202314-G

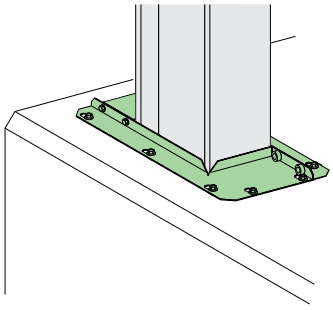

KTB0●●●●TT01

DD205983-G

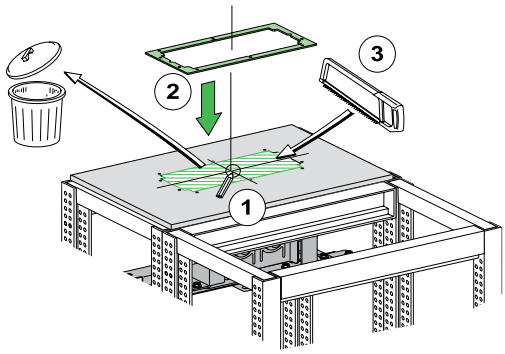

DD205984-G

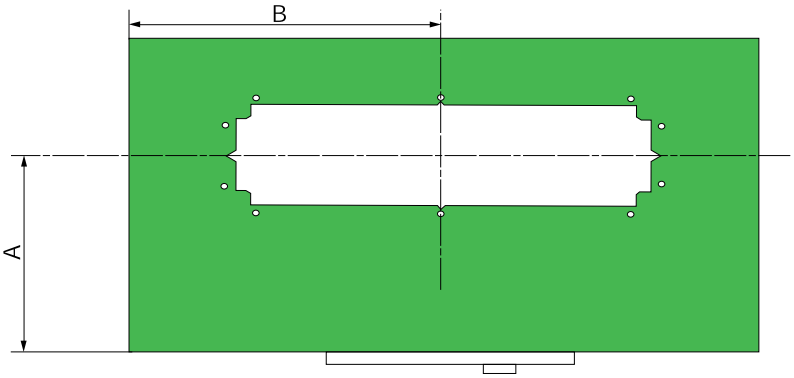

Okken

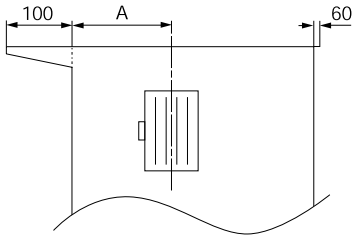

Cut-out drawing (for all the ratings)

It is advised to cut out the switchboard roof in the workshop.
Important: the dimensions are measured from switchboard framework.

DD210776

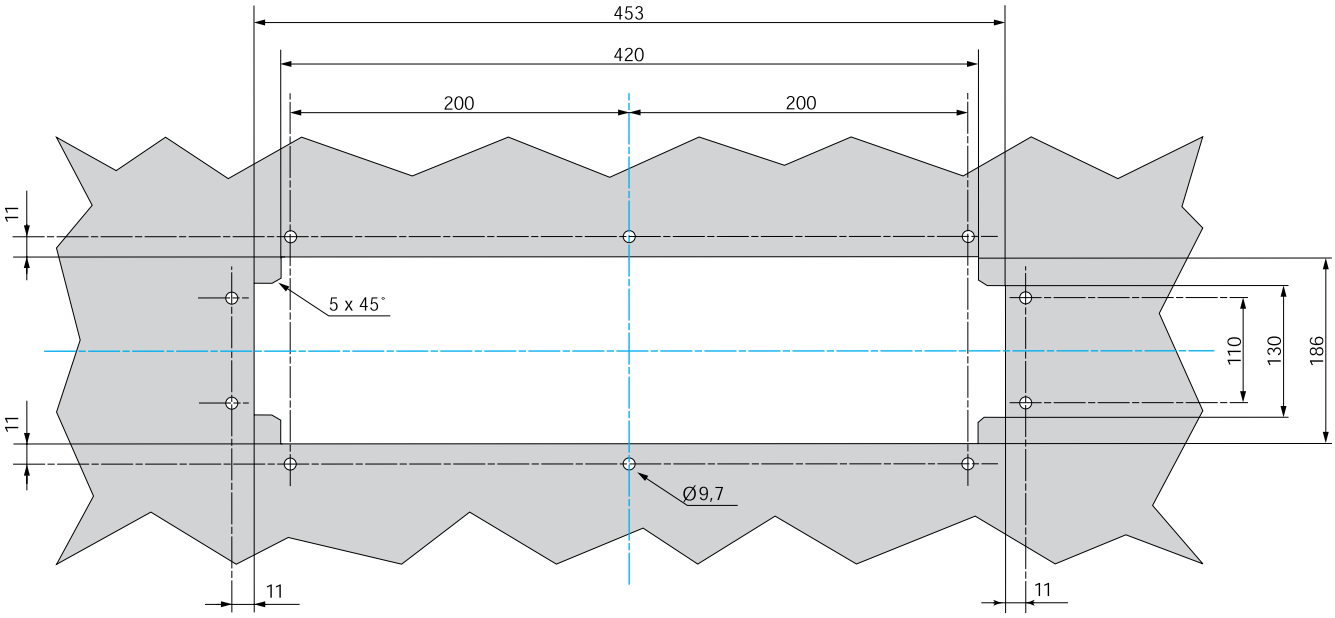

Centre lines.

Connection to LV switchboards
By universal feed unit

Canalis KTC

PD202351

Canalis KT can be connected to switchboards via a universal connector. To simplify the work, it is advised to fit the switchboard busbars with a **distance between centres of 115 mm**.
Jointing with the switchboard is via a straight or elbow universal feed unit with a straight or flat outlet.
Connections are made using torque nuts offering both ease of use and the possibility of a visual check before energising.

Enclosure depth depending on the rating of the trunking

Rating of trunking (A)	Depth "Y" of flange feed unit plate (mm)	Minimum depth "X" of switchboard (mm)
1000 to 1600	230	400
2000 to 3200	350	400
4000 and 5000	510	600

Busbars in switchboard (recommended distance between centres = 115 mm)

DD205986-G

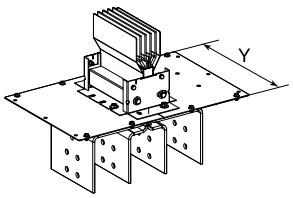

KTA●●●●ER●●

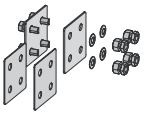

KTA0000YB2

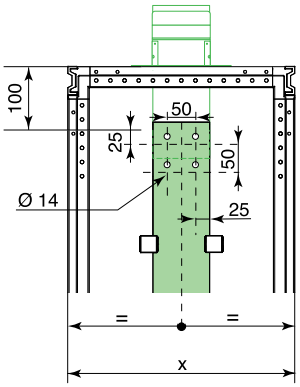

DD205987-G

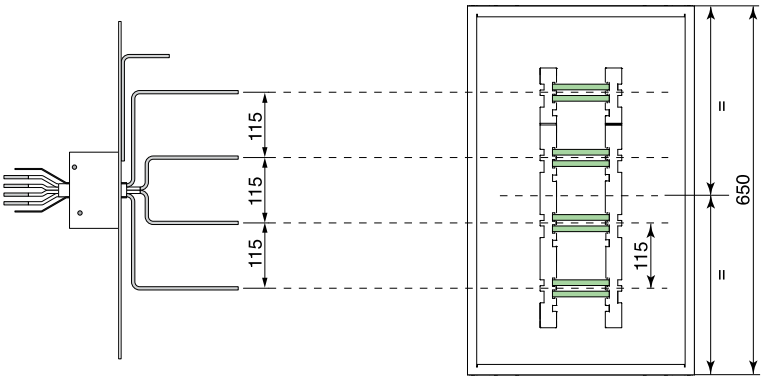

Phase order

DD205988-G

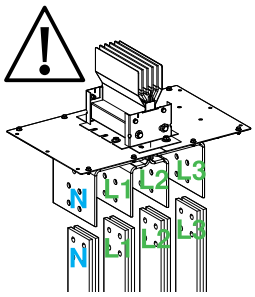

If the order of the phases in the trunking and the switchboard is different, it is advised to invert the phases in the switchboard. If that is not possible, use the phase and neutral crossover components. For more information, see the "Description", page 33 and "Catalogue numbers/Dimensions" section, page 56.

DD210780

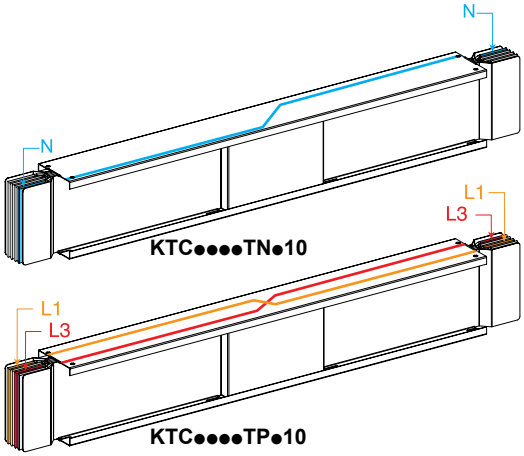

Cut-out drawing

It is advised to cut out the switchboard roof in the workshop.

Cut-out for universal feeder unit, with distance between centres = 115 mm

Rating of trunking (A)	Depth "Y" of flange feed unit plate (mm)
1000 to 1600	230
2000 to 3200	350
4000 and 5000	510

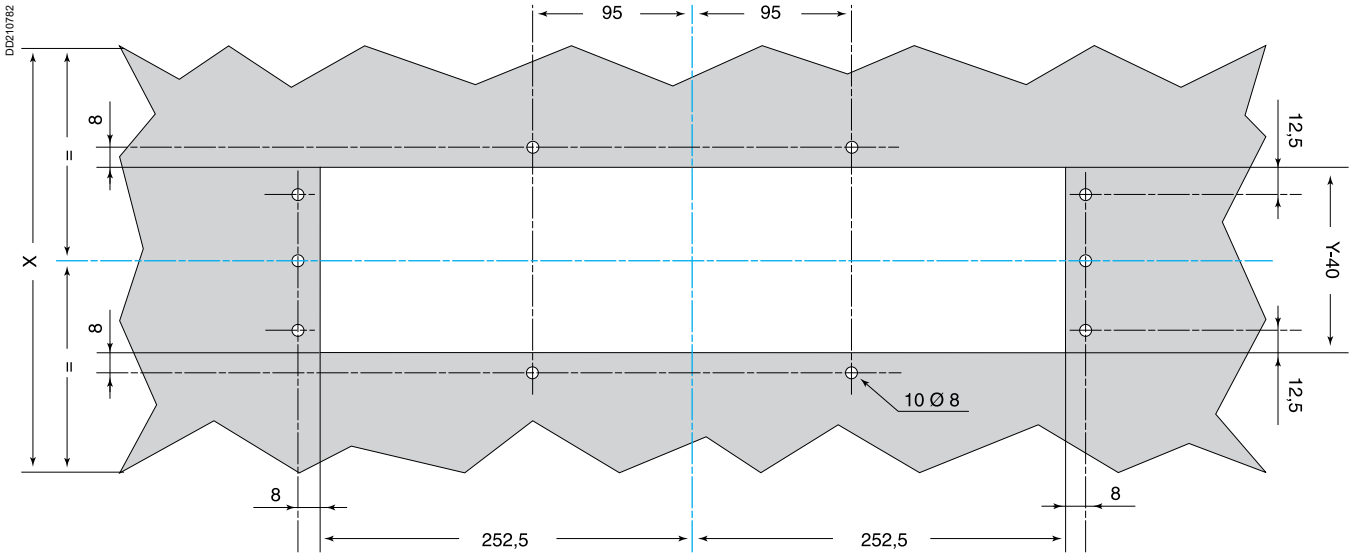

Centre lines.

Connection to LV switchboards
By feed and connection plates

Canalis KTC

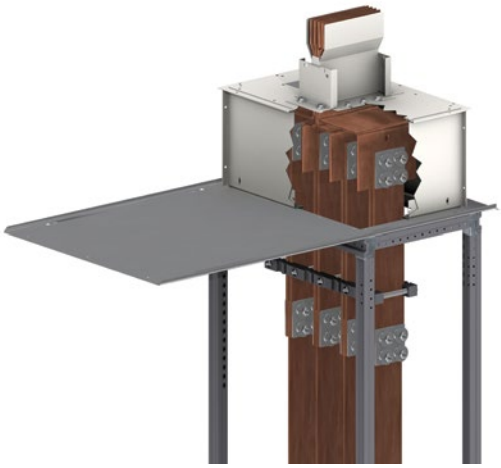

Universal feed unit (recommended distance between centres = 115 mm)

Connection plates are flexible copper bars, insulated or not, and drilled at one or both ends. They are supplied with bolts, washers and torque nuts for connection to straight or elbow universal feed units.
To simplify the work, it is advised to universal feed units with a **distance between centres of 115 mm**.

Enclosure depth depending on the rating of the trunking

Rating of trunking (A)	Depth "Y" of flange feed unit plate (mm)	Minimum depth "X" of switchboard (mm)
1000 to 1600	230	400
2000 to 3200	350	400
4000 and 5000	510	600

Vertical incomer

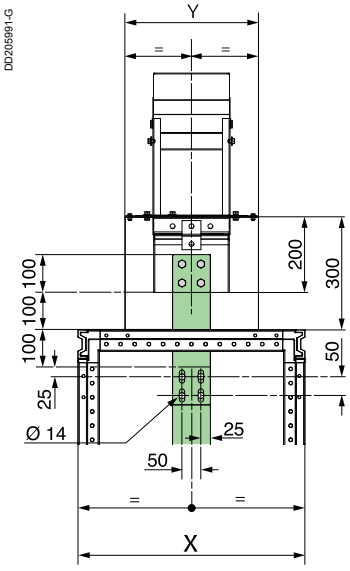

Horizontal incomer

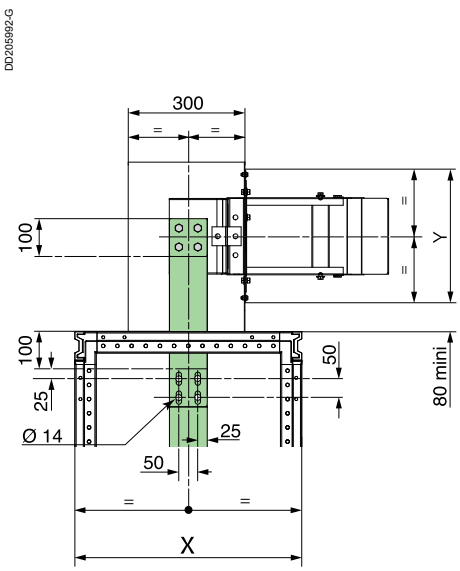

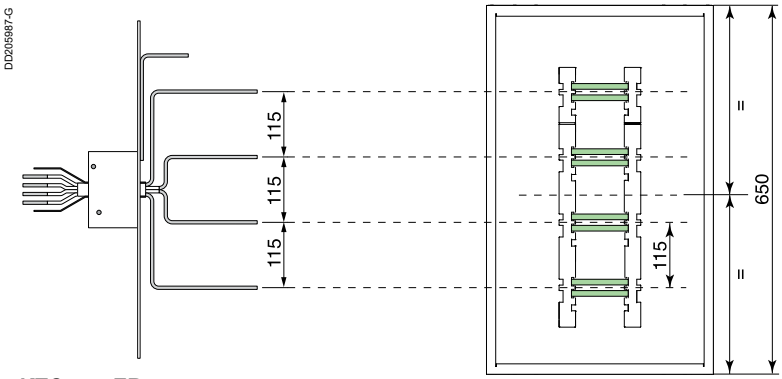

KTC●●●●ER●●

Connection to LV switchboards
By feed and connection plates

Selection of connection plates

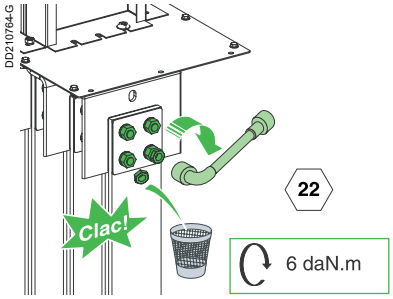

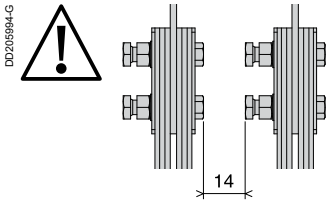

The required number of connection plates is indicated in the table below.

Busbar trunking rating (A)	Bare copper connection plates per phase	
	Number	Section (mm²)
1350	2 (100 x 5)	1000
1600	2 (100 x 5)	1000
2000	3 (100 x 5)	1500
2500	3 (100 x 5)	1500
3200	4 (100 x 5)	2000
4000	5 (100 x 5)	2500
5000	6 (100 x 5)	3000
6300	8 (120 x 5)	4800

Connection plates	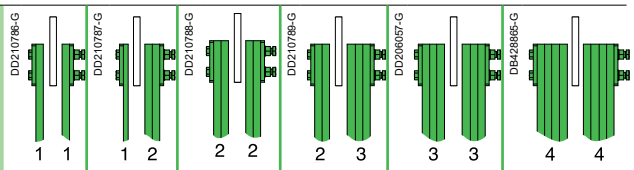					
Busbar trunking rating (A)	1350 to 1600	2000 to 2500	3200	4000	5000	6300

Short-circuit withstand

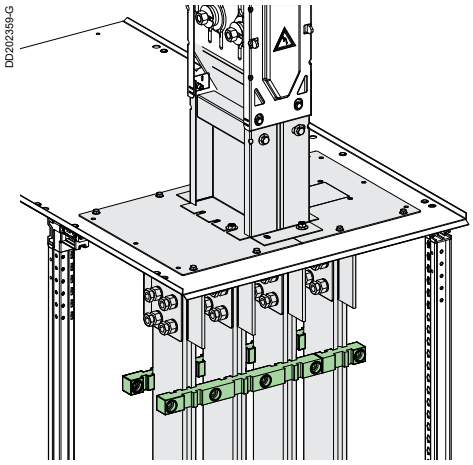

Short-circuit withstand table

Short-time withstand current (Icw)	Maximum distance between support centres X (mm)
≤ 43 kA	400
43 kA ≤ Icw ≤ 50 kA	225
50 kA ≤ Icw ≤ 100 kA	150

Vertical incomer

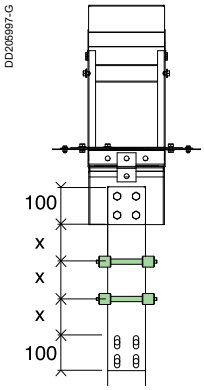

Horizontal incomer

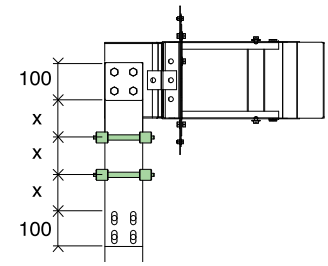

Phase order

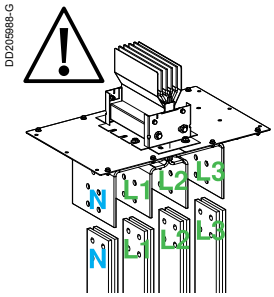

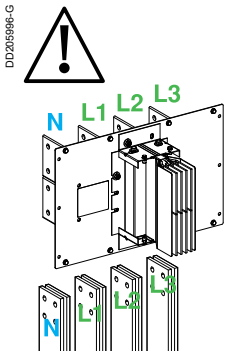

If the order of the phases in the trunking and the switchboard is different, it is advised to invert the phases in the switchboard. If that is not possible, use the phase and neutral crossover components.
For more information, see the "Description" section, page 33 and "Catalogue numbers/Dimensions" section, page 56.

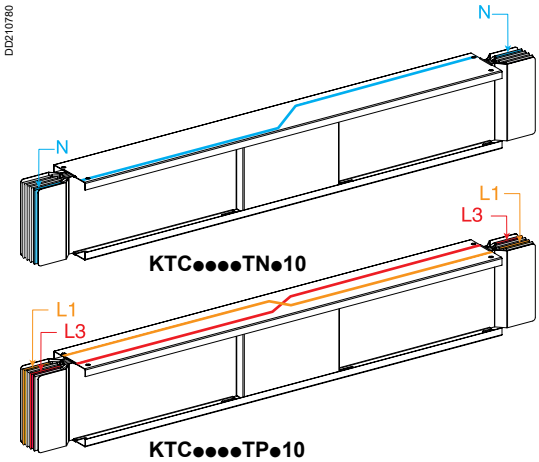

Connection to LV switchboards
By feed and connection plates

Canalis KTC

Dimensions of protective covers

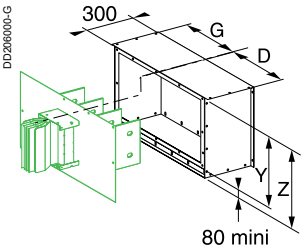

KTB●●●●CR1

Horizontal incomer

Rigid horizontal cover KTB●●●●CR1 for ER straight outlet feed connectors type N1 to N6

Rating (A)	Dimensions (mm)			
	Y	D	G	Z
1000 to 1600	230	220 to 475	220 to 475	310 to 800
2000 to 3200	350	220 to 475	220 to 475	430 to 800
4000 and 5000	510	220 to 475	220 to 475	590 to 800

Cut-out drawing

It is advised to cut out the switchboard roof in the workshop.

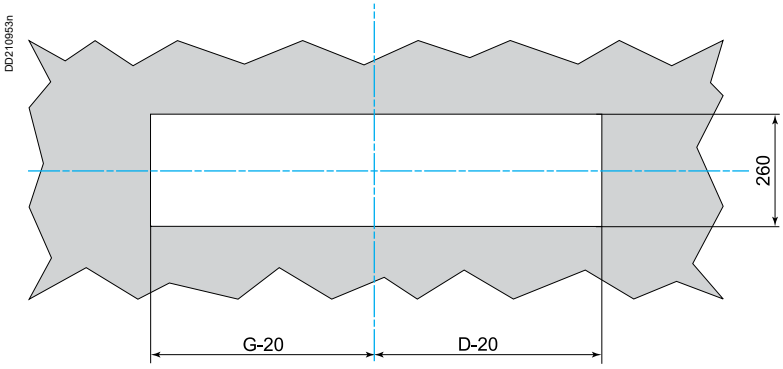

Centre lines.

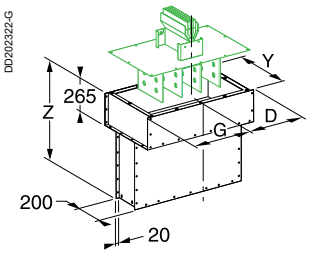

KTB●●●●CR2

Vertical incomer

Rigid vertical cover KTB●●●●CR2 (400 to 800 mm height) for ER straight outlet feed connectors type N1 to N6

Rating (A)	Dimensions (mm)			
	Y	D	G	Z
1000 to 1600	230	220 to 475	220 to 475	400 to 800
2000 to 3200	350	220 to 475	220 to 475	400 to 800
4000 and 5000	510	220 to 475	220 to 475	400 to 800

Cut-out drawing

It is advised to cut out the switchboard roof in the workshop.

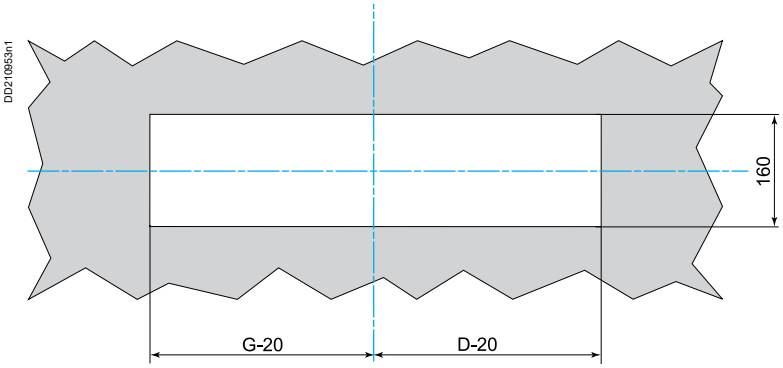

Centre lines.

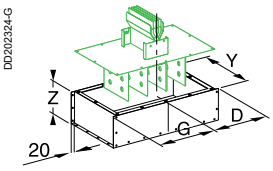

KTB●●●●CR3

Rigid vertical cover KTB●●●●CR3 (100 to 400 mm height) for ER straight outlet feed connectors type N1 to N6

Rating (A)	Dimensions (mm)			
	Y	D	G	Z
1000 to 1600	230	220 to 475	220 to 475	400 to 800
2000 to 3200	350	220 to 475	220 to 475	400 to 800
4000 and 5000	510	220 to 475	220 to 475	400 to 800

Cut-out drawing

It is advised to cut out the switchboard roof in the workshop.

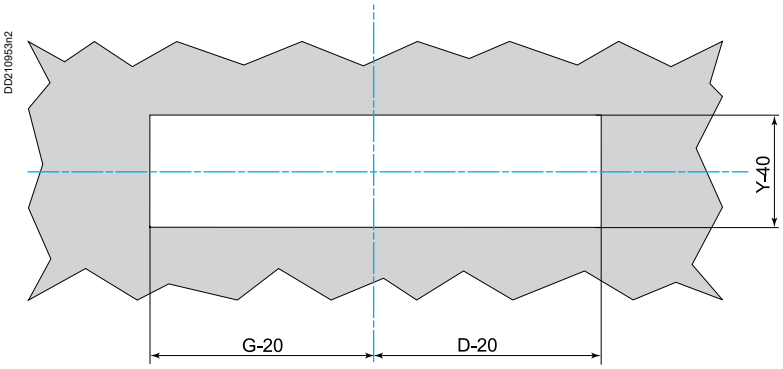

Centre lines.

Connection to cast resin transformers
Selection guide

Canalis KTC

This guide will allow you to:
■ choose the connection best suited to your layout (incoming direction, flat or edgewise busbar trunking, possibility of adjusting phase order)
■ check the total height of the link with respect to the premises' ceiling height, dimension Z0 + Z2 (plan for 100 mm minimum between the upper point of the link and the ceiling)
■ optimise your link whilst respecting the following rule:
$(Z_0 + Z_1)_{switchboard} = (Z_0 + Z_1)_{transformer}$ to avoid multiple elbows to change levels
■ position the sections for the busbar trunking supports.

Type of connection	Connection with interface to Trihal transformers		Universal connection
	TS1	TS2	TS3
PD202399_r	DD202487 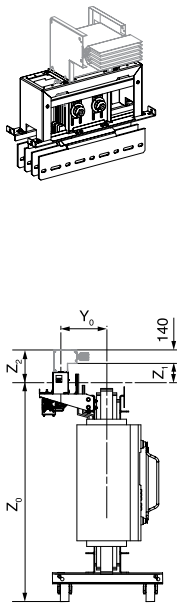	DD202488 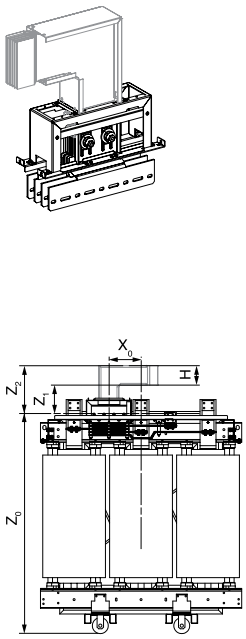	DD202489 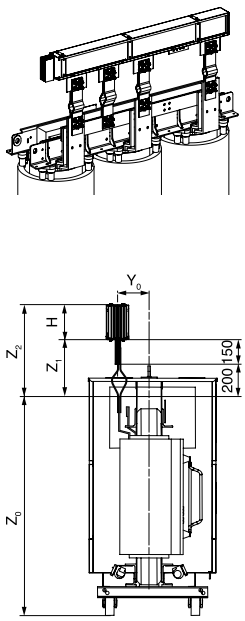
Z_0	See page 224	See page 224	According to manufacturer's drawing
Z_1 minimum	230	238	350
maximum	-	-	350
Z_2	Z_1 + 140	Z_1 + H	Z_1 + H
Selecting phase order	Fixed	Fixed	At time of order
Front or rear exit	■		
Right or left exit		■	■
Edgewise layout		■	■
Flat layout	■		

Connection to cast resin transformers
Selection guide

Trunking cross-section

Rating (A)	1000	1350	1600	2000	2500	3200	4000	5000	6300
Height H (mm) Width W (mm)	74 140	104 140	124 140	164 140	204 140	244 140	324 140	404 140	244 130 244 140

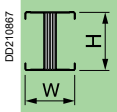

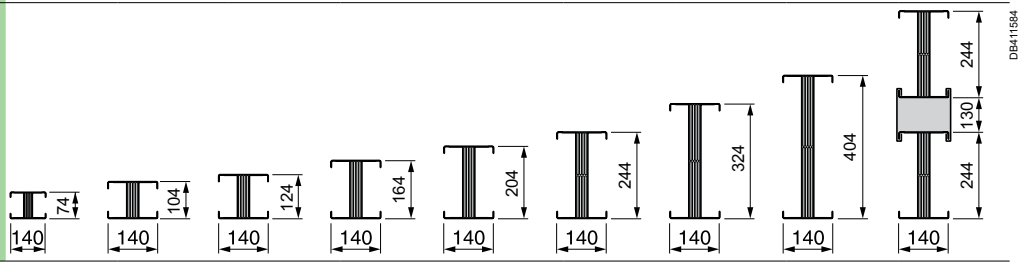

	TS4	TS5	TS6	TS7	TS8
	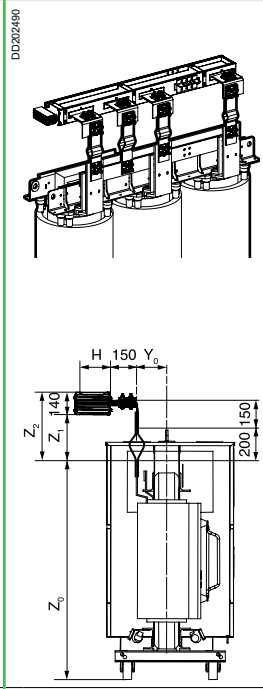	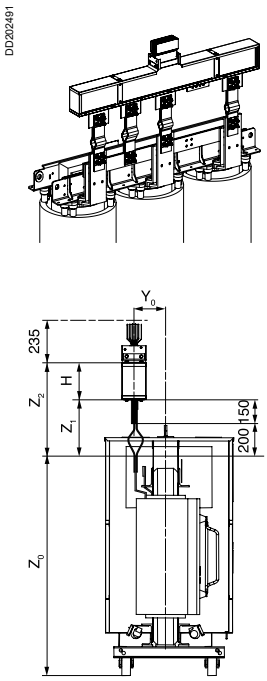	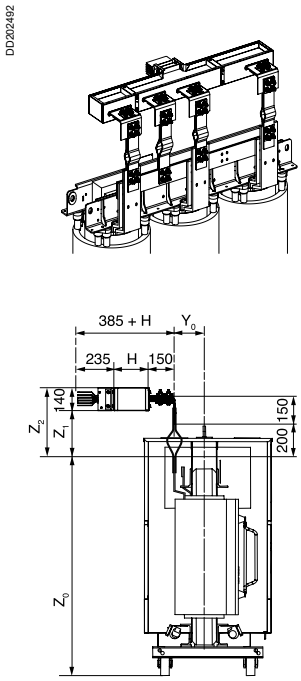	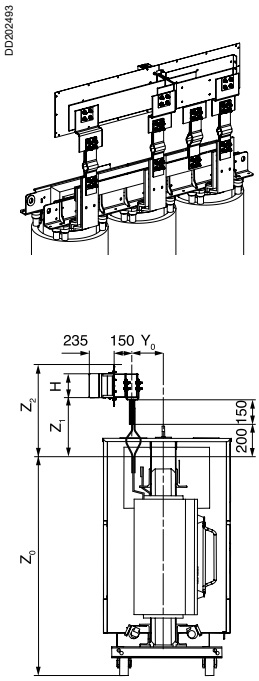	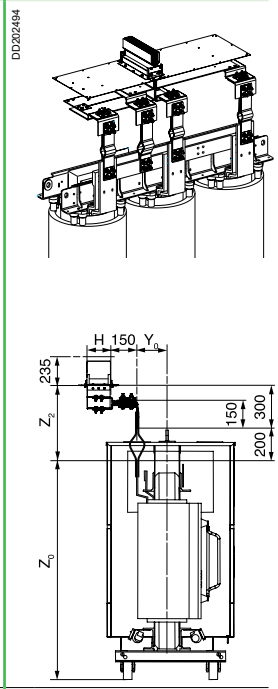
	According to manufacturer's drawing	According to manufacturer's drawing	According to manufacturer's drawing	According to manufacturer's drawing	According to manufacturer's drawing
	280	350	280	350	-
	280 (1)	350 (1)	280 (1)	350 (1)	-
	420 (1)	Z_1 + H	420 (1)	H = 74 or 104 or 124 mm: Z_1 + H/2 + 115 H = 164 or 204 or 244 mm: Z_1 + H/2 + 175 H = 324 or 404 mm: Z_1 + H/2 + 255	500 (1)
	At time of order	At time of order	At time of order	At time of order	At time of order
	■		■	■	
			■		
	■			■	

(1) To use standard connection plates L = 406 mm in accordance with our recommendations.

Connection to Trihal cast resin transformers
By Canalis interface

Canalis KTC

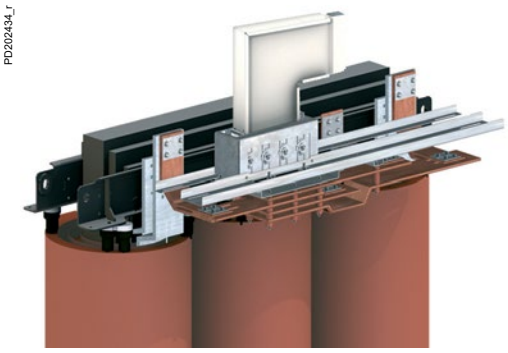

The Trihal dry-type transformers are supplied with a specific interface tested to receive the Canalis KT busbar trunking. Jointing with the switchboard is achieved using a standard run section (straight, elbow section, etc) and a joint block identical to that for connecting run elements.

The Canalis KT/dry type transformer interface, which is fitted to the transformer, is designed to accept the transformer's 25 % overload in the case of forced ventilation.

The connections are tested and qualified in normal operating conditions with respect to temperature rise (Δθ) and short-circuits (Isc).

The busbar trunking is quickly connected to the dry-type transformer using a simple joint block with torque nuts, guaranteeing tightening torque.

Table of compatibility between Canalis KT and the connection interface for naturally ventilated (AN) dry-type transformers.

Dry-type transformer					Canalis KTC	
Rating (kVA)	I nominal (1) (A)	Interface			Cross-section	Type
		Type	Junction	Rating (A)		
630	887	1	H124	1600	140 x 74	KTC1000
800	1126	2	H164	2000	140 x 104	KTC1350
1000	1408	3	H204	2500	140 x 124	KTC1600
1250	1760	4	H244	3200	140 x 164	KTC2000
1600	2253	5	H324	4000	140 x 204	KTC2500
2000	2816	6	H404	5000	140 x 244	KTC3200
2500	3520	7	H404	5000	140 x 324	KTC4000

(1) I is given as an indication only and is calculated with U - 410 V.

Table of compatibility between Canalis KT and the connection interface for forced ventilated (AF) dry-type transformers.

Dry-type transformer					Canalis KTC	
Rating (kVA)	I nominal (1) (A)	Interface			Cross-section	Type
		Type	Junction	Rating (A)		
630	1108	1	H124	1600	140 x 104	KTC1350
800	1407	2	H164	2000	140 x 124	KTC1600
1000	1760	3	H204	2500	140 x 164	KTC2000
1250	2253	4	H244	3200	140 x 204	KTC2500
1600	2816	5	H324	4000	140 x 244	KTC3200
2000	3520	6	H404	5000	140 x 324	KTC4000

(1) I is given as an indication only and is calculated with U - 410 V.

If, for reasons of busbar trunking operating conditions or performance requirements, you have to use a rating other than those defined in the above tables, consult us.

Phase order

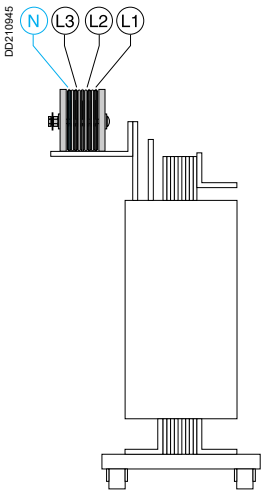

If the phase order of the busbar trunking is different to that of the switchboard's busbars, it is recommended a phase inversion is carried out in the switchboard.
If this cannot be done, use the phase and neutral transposition section.
For more information on transposition sections, see "Description" page 33 and "Catalogue numbers/Dimensions" section, page 56.

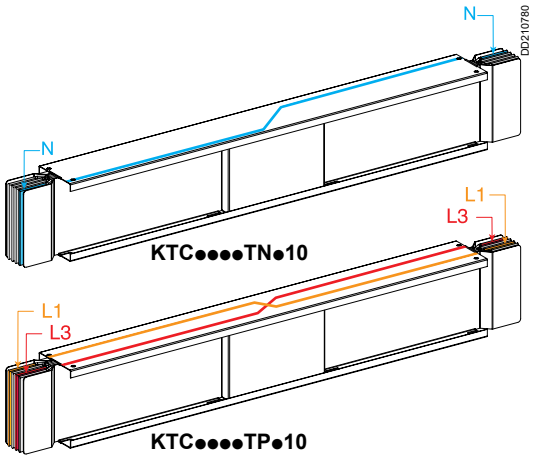

Connection to Trihal cast resin transformers
By Canalis interface

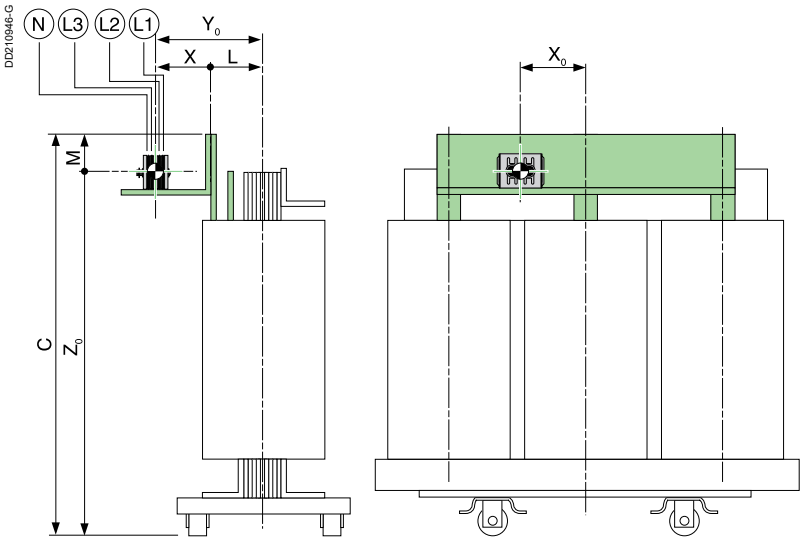

Reference point

Dimensions

Dimensions X, M and X_0

Dimensions (mm)	Transformer power (kVA)						
	630	800	1000	1250	1600	2000	2500
X	147	150	170	147	150	170	153
M	100	100	108	93	124	144	149
X_0	233	215	265	245	300	300	322.5
Interface type	1	2	3	4	5	6	7

Dimensions Y_0 and Z_0

$Y_0 = X + L$
$Z_0 = C - M$

Dimensions **C** and **L** are different according to country standards.

French standard
FT no.235627 rev. 3 - Primary voltage: 20 kV - Insulation voltage: 24 kV -Secondary voltage: 410 V

Dimensions (mm)	Transformer power (kVA)						
	630	800	1000	1250	1600	2000	2500
C	1614	1744	1749	1929	2089	2209	2297
L	220	225	240	240	240	257	275

German standard
FT no.235763 rev. 0 - Primary voltage: 20 kV - Insulation voltage: 24 kV - Secondary voltage: 400 V

Dimensions (mm)	Transformer power (kVA)						
	630	800	1000	1250	1600	2000	2500
C	1734	1744	1749	2019	1979	2199	2279
L	210	220	225	245	255	255	265

Spanish standard
FT no.235515 rev. 3 - Primary voltage: 20 kV - Insulation voltage: 24 kV - Secondary voltage: 420 V

Dimensions (mm)	Transformer power (kVA)					
	630	800	1000	1250	1600	2000
C	1614	1744	1879	1929	1979	2194
L	220	225	215	245	250	245

Belgian standard
FT no.235820 rev. 0 - Primary voltage: 15 kV - Insulation voltage: 17.5 kV - Secondary voltage: 400 V

Dimensions (mm)	Transformer power (kVA)						
	630	800	1000	1250	1600	2000	2500
C	1484	1564	1694	1844	2054	2149	2164
L	215	210	215	225	230	255	235

Connection to Trihal cast resin transformers
By Canalis interface

Canalis KTC

Sealing kit

The sealing kit must be ordered with the KT busbar trunking. The busbar trunking size defines the sealing kit size. For the different types of kit, see "Catalogue numbers / Dimensions".
The kit includes a drilling and cut-out template for the dry-type transformer panels.

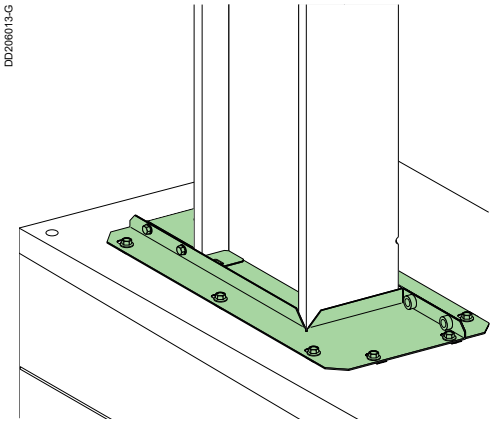

KTB0●●●●TT01

Cut-out drawing

It is recommended that the cutting-out of the transformer panels is done in the workshop.

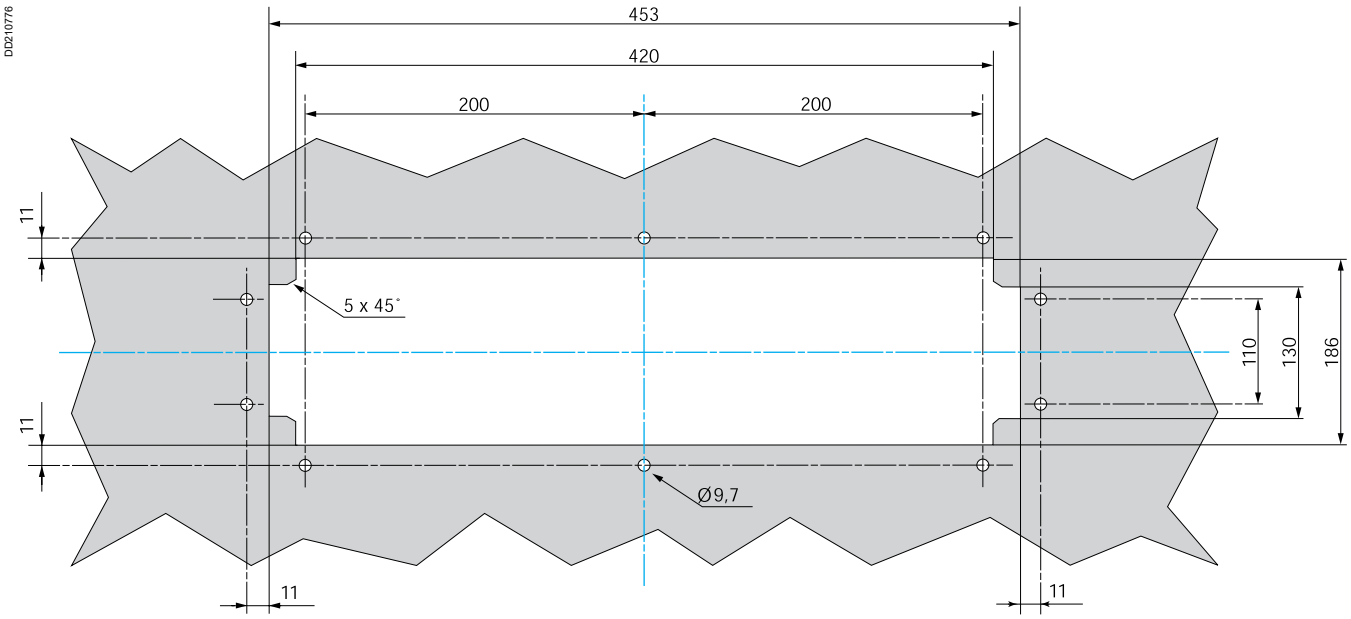

Junction axis.

Connection to cast resin transformers
By universal feed and connection plates

PD202352

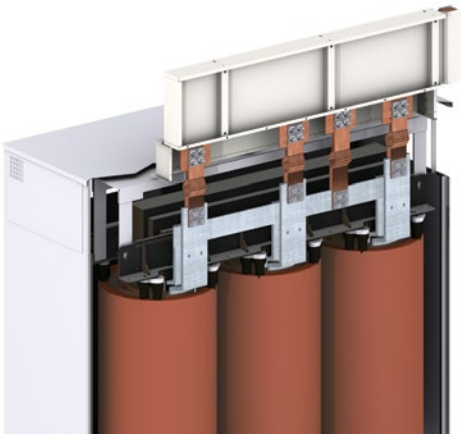

Canalis KT can be connected to cast resin transformers using a universal feed. The connection is made using a flexible busbar (connection plates or braids) to avoid transmitting vibrations and expansions. The connection plates are made up of either insulated or non-insulated flexible copper bars, drilled at one or both ends. A nut and bolt kit allows connection to the feed.
The connections use torque-head bolts which provide both ease of installation and visual inspection of correct tightening before energising.

If the transformer is supplied with panels, provide for an additional cover to maintain the protection degree.

Choice of Canalis KT busbar trunking rating according to transformer power.

Transformer		KTC rating at nominal power (2) (A)
Power (kVA)	I nominal (1) (A)	
630	887	1000
800	1126	1350
1000	1408	1600
1250	1760	2000
1600	2253	2500
2000	2816	3200
2500	3520	4000
3150	4435	5000

(1) I is given as an indication only and is calculated with U = 410 V and at transformer nominal setting, without forced ventilation.
(2) The busbar trunking rating is defined for normal operating conditions.

Recommended configurations for short-circuit withstand (connection plate L = 400 mm)

TS3 and TS5 universal connection, edgewise mounting

DD206015-G

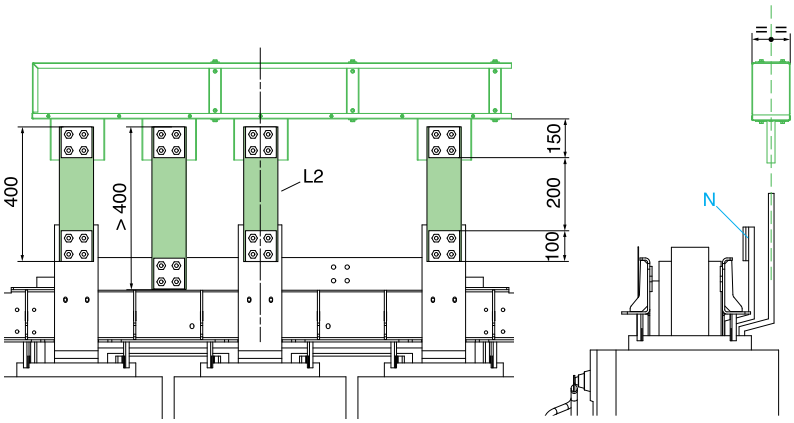

KTC●●●●EL●1 or **KTC●●●●EL●2** or **KTC●●●●EL●3** or **KTC●●●●EL●4**

TS4 and TS6 universal connection, flat mounting (using angle brackets)

DD206016-G

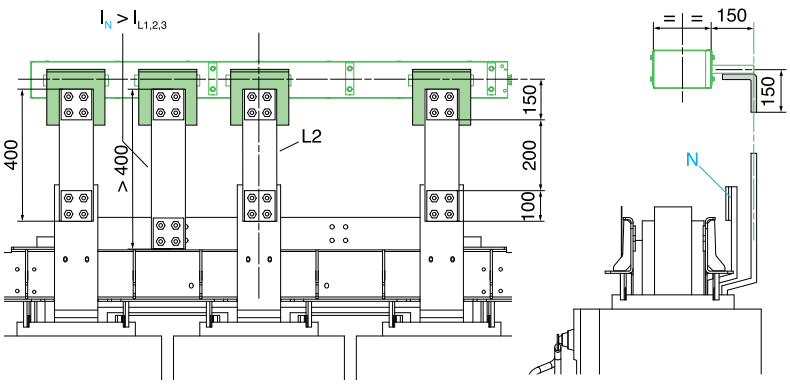

KTC●●●●EL●1 or **KTC●●●●EL●2** or **KTC●●●●EL●3** or **KTC●●●●EL●4** with angle bracket **KTB0000YE1**

Connection to cast resin transformers
By universal feed and connection plates

Canalis KTC

TS7 universal connection, edgewise mounting

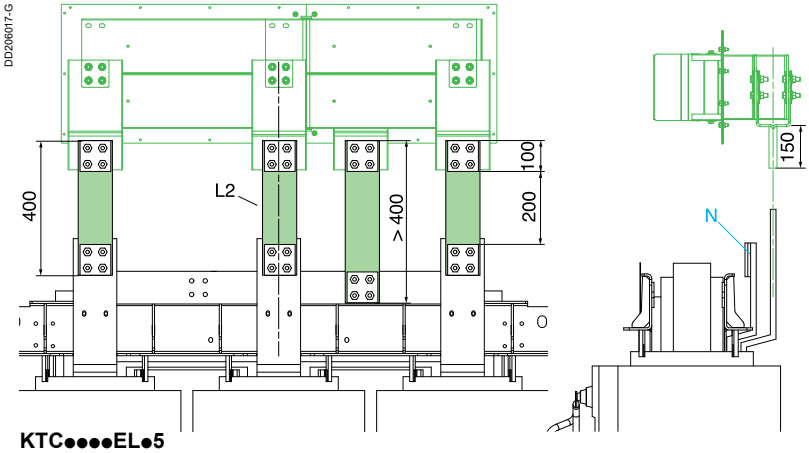

KTC●●●●EL●5

TS7 universal connection, flat mounting (using angle brackets)

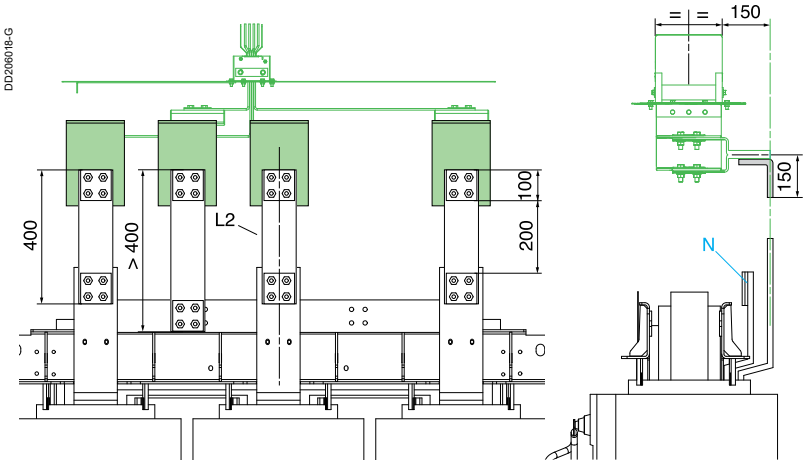

KTC●●●●EL●5 with angle bracket **KTB0000YE**

Definition of connection plates

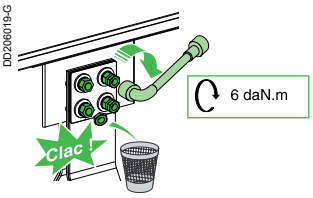

The required number of connection plates is indicated in the table below.

Busbar trunking rating (A)	Bare copper connection plates per phase	
	Number	Section (mm²)
1350	2 (100 x 5)	1000
1600	2 (100 x 5)	1000
2000	3 (100 x 5)	1500
2500	3 (100 x 5)	1500
3200	4 (100 x 5)	2000
4000	5 (100 x 5)	2500
5000	6 (100 x 5)	3000
6300	16 (YC5 - 100 x 5)	6000

Connection plates	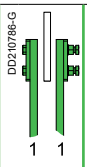	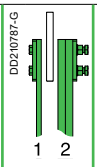	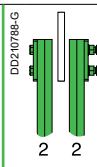	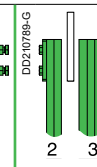	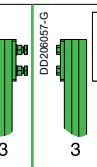	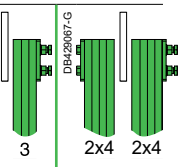
	1 1	1 2	2 2	2 3	3 3	2x4 2x4
Busbar trunking rating (A)	1350 to 1600	2000 to 2500	3200	4000	5000	6300

Connection to cast resin transformers
By universal feed and connection plates

Phase order

Phase selection is made when the feed is ordered.
Phase L2 is fixed and can therefore be used as a reference for installing the feed on the transformer.

The different phase selection possibilities (T)

■ Dedicated feeds N1 to N4,

DD210951

T1

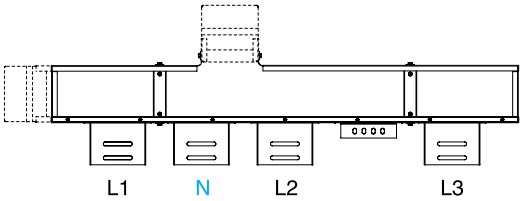

T2

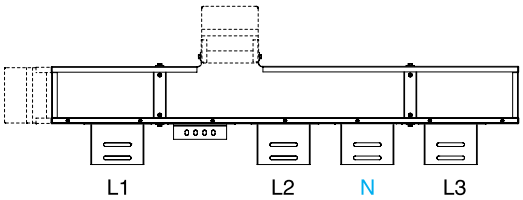

T3

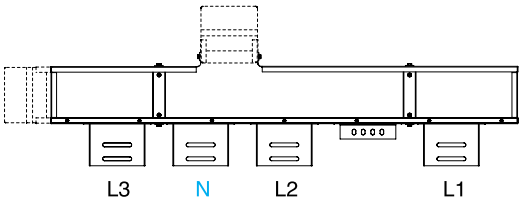

T4

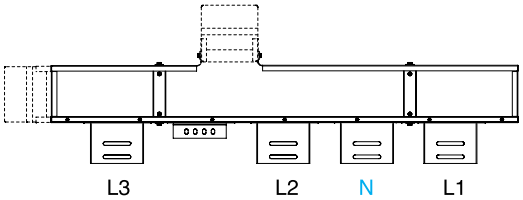

Important: the drawings and references above correspond to a phase order of N321, joint block side. If the phase order on the joint block side is N123, inverse T=1 with T=3 and T=2 with T=4.

■ Feed with flat bars N5.

DD210952

T = 2

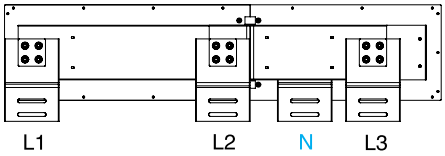

T = 3

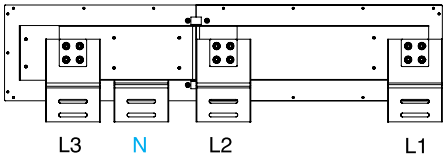

Important: the drawings and references above correspond to a phase order of N321, joint block side. If the phase order on the joint block side is N123, inverse L1 and L3 on the transformer side marking.

Connection to cast resin transformers
By universal feed and connection plates

Canalis KTC

Dimensions of protective covers

Vertical protection covers for dry-type transformer feeds N1, N2, N3 and N4

Rating (A)	Dimensions (mm)		
	Y	Z	
		Minimum	Maximum
1000 to 1600	230	200	350
2000 to 3200	350	200	350
4000 to 5000	510	200	350

KTB0000CR4

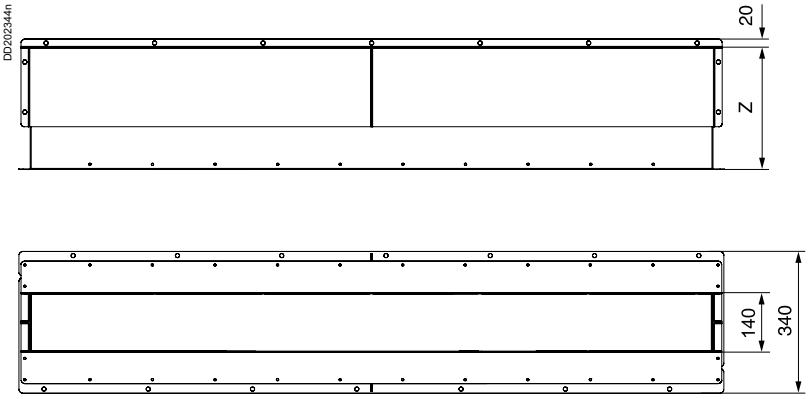

Horizontal protection covers for dry-type transformer feeds N1, N2, N3 and N4

Rating (A)	Dimensions (mm)		
	Y	Z	
		Minimum	Maximum
1000 to 1600	230	330	480
2000 to 3200	350	330	480
4000 to 5000	510	330	480

KTB0000CR5

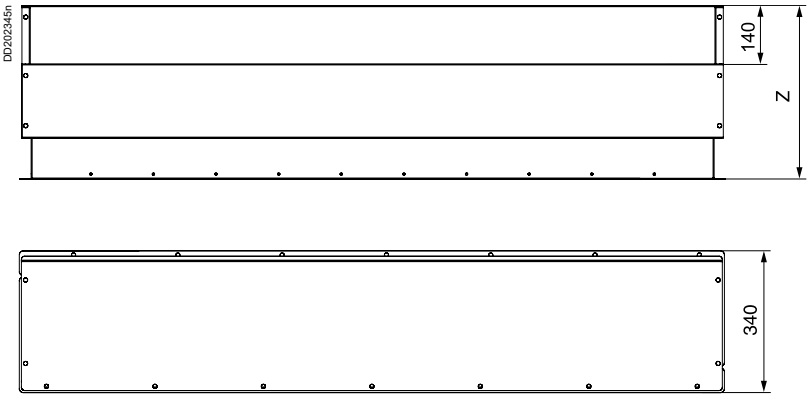

Connection to cast resin transformers
By universal feed and connection plates

Horizontal protection cover for dry-type transformer feed N5

Rating (A)	Dimensions (mm)		
	Y	Z	
		Minimum	Maximum
1000 to 1600	230	380	530
2000 to 3200	350	500	650
4000 to 5000	510	660	810

KTB●●●●CR6

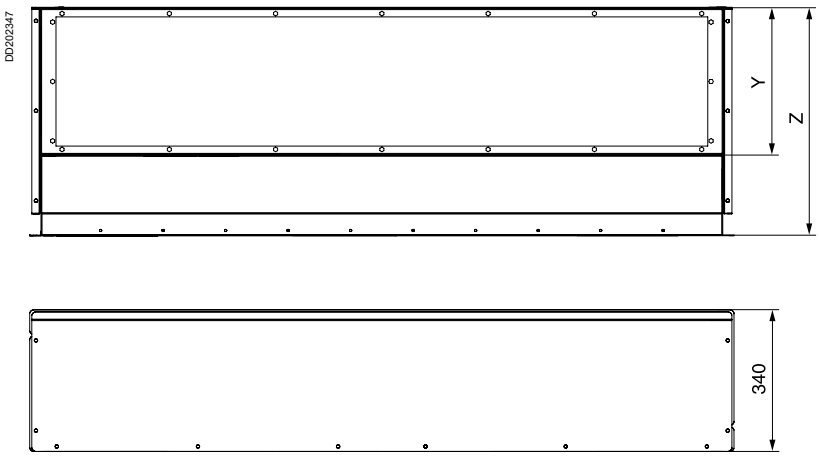

Cut-out drawing for dry-type transformer panels

It is recommended that the cutting-out of the transformer panels is done in the workshop.

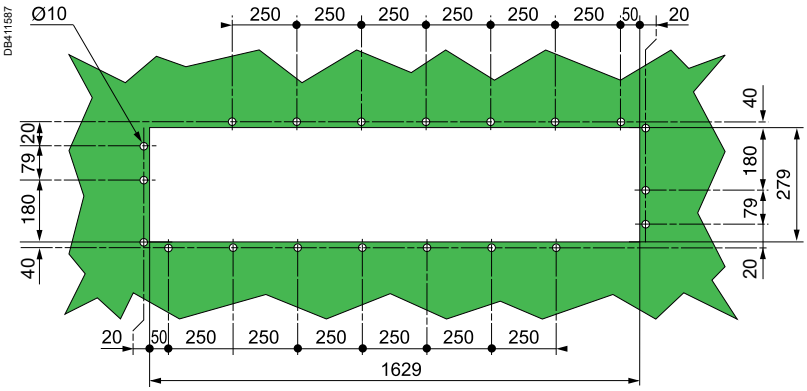

View from the top of the transformer.

Connection to Minera immersed transformers
Horizontal incomer

Canalis KTC

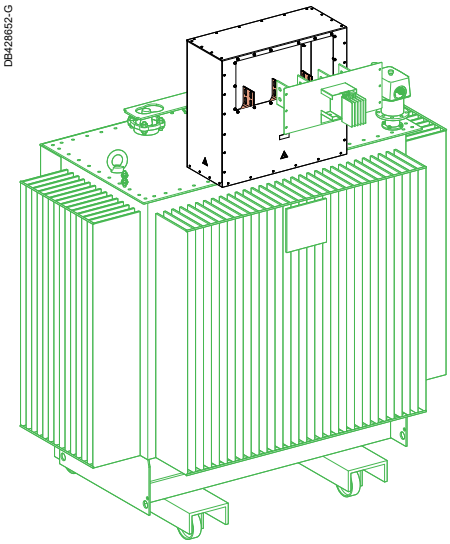

Canalis KT is easily connectable to Minera transformers.
A pre-designed interface including cover, flexible links and bolts is installed in place of the cable box delivered (or not) with the transformer.
This solution that connects end feed units ER1 to ER6, make the design simple and fast.
- Position of the flange is given by the table 1.
- Products that compose the interface are given in the table 2.

The dimensions D and X are given by the Table 1.
D_0 and Z_0 must be taken from the transformer documentation.
The interface is always centered in the middle of the transformer indifferently for the 3P or 4P versions.

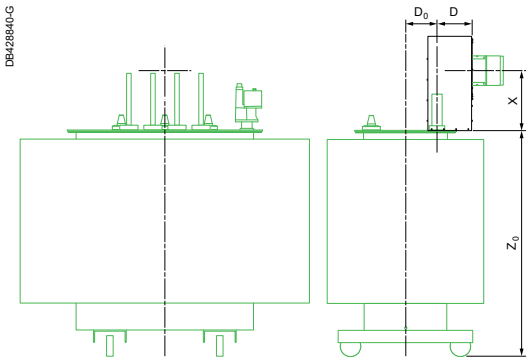

KTC Minera interfaces composition - horizontal incomer

	Protective covers			Flexible links reference and quantity				
	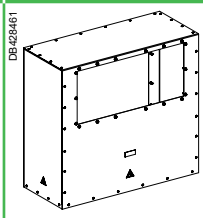				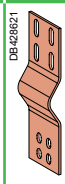			
Type	**Catalogue number**	**D (mm)**	**X (mm)**	**Polarity**	**KTB0100YC305B** (dimensions in mm)			
					L = 320 A = 32 B = 60 C = 34 D = 32 E = 2 F = 2 Y = 25	L = 320 A = 32 B = 30 C = 34 D = 32 E = 2 F = 2 Y = 25	L = 350 A = 32 B = 31 C = 15 D = 32 E = 2 F = 2 Y = 25	L = 350 A = 32 B = 31 C = 53 D = 32 E = 2 F = 2 Y = 25
KTC H2	**KTB0230CR71**	150	320	3P	6			
				4P	8			
KTC H3	**KTB0350CR72**	150	350	3P		9		
				4P		12		
KTC H4	**KTB0350CR73**	150	400	3P			6	3
				4P			7	5
KTC H5	**KTB0350CR73**	150	400	3P			6	6
				4P			8	8
KTC H6	**KTB0350CR74**	180	400	3P				
				4P				
KTC H7	**KTB0510CR72**	180	470	3P				
				4P				
KTC H8	**KTB0510CR73**	180	510	3P				
				4P				
KTC H9	**KTB0510CR73**	180	510	3P				
				4P				
KTC H10	**KTB0726CR71**	180	469	3P				
				4P				

Interface details, see page 88

Connection to Minera immersed transformers
Horizontal incomer

Horizontal incomer interface

Minera transformer			Canalis KT feed unit ER1, ER2, ER3, ER4, ER5, ER6								
Rating (kVA)	I nominal (A)	Bar bushing dimensions (mm)	Between centres J, K and M (mm)	KTC1350	KTC1600	KTC2000	KTC2500	KTC3200	KTC4000	KTC5000	KTC6300
630	887	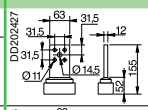	150	Type KTC H2							
800	1126			Type KTC H2	Type KTC H2						
1000	1408	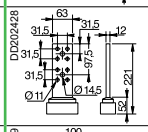			Type KTC H2	Type KTC H3					
1250	1760	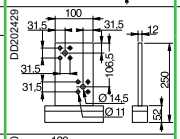	170			Type KTC H4	Type KTC H4				
1600	2253						Type KTC H4	Type KTC H5			
2000	2816	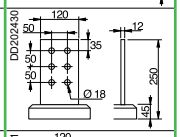						Type KTC H6	Type KTC H7		
2500	3520	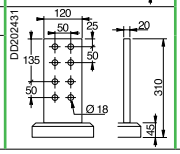							Type KTC H8	Type KTC H9	
3150	4435									Type KTC H9	Type KTC H10

							Bolts sets reference and quantity			Connection plates
							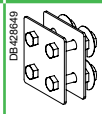	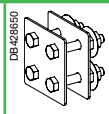		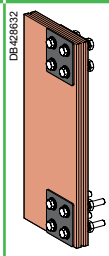
	KTB0120YC305B (dimensions in mm)						KTB0000YB3	KTB0000YB4	KTB0000YB5	KTB0000YP21
	L = 350 A = 50 B = 24 C = 20 D = 50 E = 2 F = 2 Y = 50	L = 350 A = 50 B = 24 C = 50 D = 50 E = 2 F = 2 Y = 20	L = 370 A = 50 B = 24 C = 20 D = 50 E = 2 F = 2 Y = 50	L = 370 A = 50 B = 24 C = 50 D = 50 E = 2 F = 2 Y = 20	L = 400 A = 50 B = 41 C = 20 D = 50 E = 2 F = 2 Y = 50	L = 400 A = 50 B = 41 C = 50 D = 50 E = 2 F = 2 Y = 20				
							1		1	
							1		1	
							1		1	
							1		1	
							1		1	
							1		1	
							1		1	
							1		1	
	6	6					2			
	8	8					2			
			6	9				2		
			8	12				2		
					6	9		2		
					8	12		2		
					9	9		2		
					12	12		2		
	12	12						1		3
	16	16						1		4

Set of bolts details, see page 103

Connection to Minera immersed transformers by standard interface

Vertical incomer

Canalis KTC

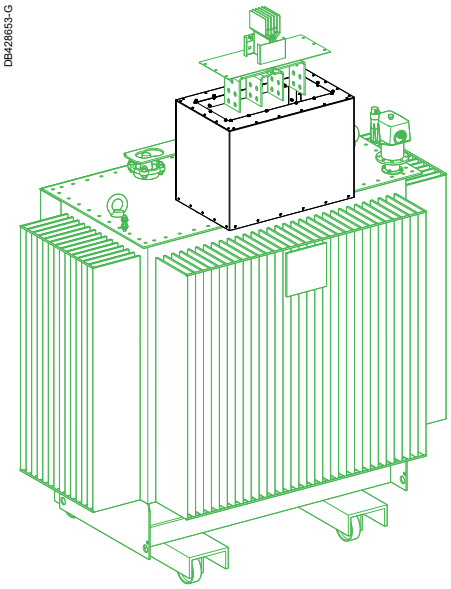

Canalis KT is easily connectable to Minera transformers.
A pre-designed interface including cover, flexible links and bolts is installed in place of the cable box delivered (or not) with the transformer.
This solution that connects end feed units ER1 to ER6, make the design simple and fast.

- Position of the flange is given by the table 1
- Products that compose the interface are given in the table 2.

The dimensions D and Z are given by the Table 1.
D_0 and Z_0 must be taken from the transformer documentation.
The interface is always centered in the middle of the transformer indifferently for the 3P or 4P versions.

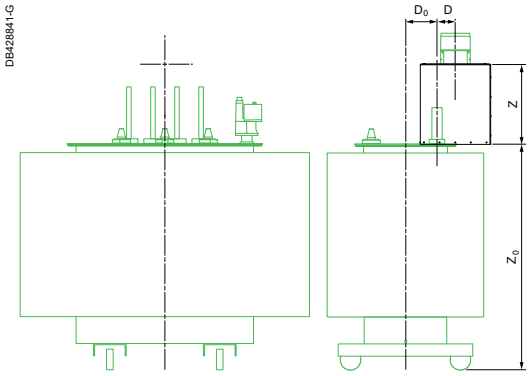

KTC Minera interfaces composition - vertical incomer

	Protective covers			Flexible links reference and quantity									
	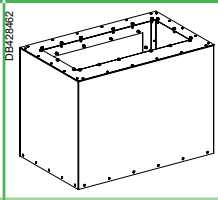				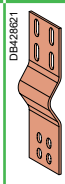								
Type	**Catalogue number**	**D (mm)**	**Z (mm)**	**Polarity**	**KTB0100YC305B** (dimensions in mm)					**KTB0120YC305B**			
					L = 320 A = 32 B = 50 C = 15 D = 32 E = 2 F = 2 Y = 31	L = 320 A = 32 B = 50 C = 53 D = 32 E = 2 F = 2 Y = 19	L = 320 A = 32 B = 60 C = 34 D = 32 E = 2 F = 2 Y = 25	L = 320 A = 32 B = 60 C = 15 D = 32 E = 2 F = 2 Y = 25	L = 320 A = 32 B = 60 C = 53 D = 32 E = 2 F = 2 Y = 25	L = 320 A = 50 B = 24 C = 29 D = 50 E = 2 F = 2 Y = 50	L = 320 A = 50 B = 24 C = 41 D = 50 E = 2 F = 2 Y = 20	L = 320 A = 50 B = 32 C = 35 D = 50 E = 2 F = 2 Y = 35	L = 340 A = 50 B = 20 C = 35 D = 50 E = 2 F = 2 Y = 35
KTC V2	**KTB0230CR81**	25	480	3P	3	3							
				4P	4	4							
KTC V3	**KTB0350CR81**	94	580	3P			9						
				4P			12						
KTC V4	**KTB0350CR82**	74	600	3P				6	3				
				4P				7	5				
KTC V5	**KTB0350CR82**	74	600	3P				6	6				
				4P				8	8				
KTC V6	**KTB0350CR83**	21	520	3P						6	6		
				4P						8	8		
KTC V7	**KTB0510CR82**	101	615	3P								15	
				4P								20	
KTC V8	**KTB0510CR82**	101	615	3P									15
				4P									20
KTC V9	**KTB0510CR82**	101	615	3P									18
				4P									24
KTC V10	**KTB0726CR81**	202	591	3P									24
				4P									32

Interface details, see page 89

Connection to Minera immersed transformers by standard interface

Vertical incomer

Vertical incomer interface

Minera transformer			Canalis KT feed unit ER1, ER2, ER3, ER4, ER5, ER6								
Rating (kVA)	I nominal (A)	Bar bushing dimensions (mm)	Between centres J, K and M (mm)	KTC1350	KTC1600	KTC2000	KTC2500	KTC3200	KTC4000	KTC5000	KTC6300
630	887	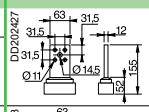	150	Type KTC V2							
800	1126			Type KTC V2	Type KTC V2						
1000	1408	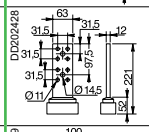			Type KTC V2	Type KTC V3					
1250	1760	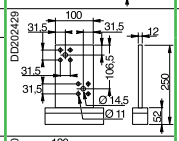	170			Type KTC V4	Type KTC V4				
1600	2253						Type KTC V4	Type KTC V5			
2000	2816	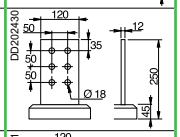						Type KTC V6	Type KTC V7		
2500	3520	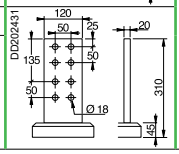							Type KTC V8	Type KTC V9	
3150	4435									Type KTC V9	Type KTC V10

Connection plates reference and quantity					Bolts sets reference and quantity		
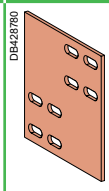				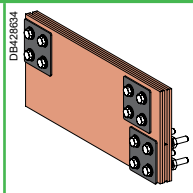	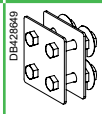	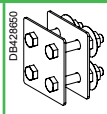	
KTB0000YP11 (dimensions in mm)	KTB0000YP12 (dimensions in mm)	KTB0000YP13 (dimensions in mm)	KTB0000YP14 (dimensions in mm)	KTB0000YP22	KTB0000YB3	KTB0000YB4	KTB0000YB5
A = 20 B = 28 H = 200 W = 200 X = 28 Y = 20	A = 20 B = 38 H = 200 W = 200 X = 38 Y = 20	A = 20 B = 28 H = 260 W = 200 X = 28 Y = 20	A = 20 B = 25 H = 200 W = 200 X = 25 Y = 21				
					1		1
					1		1
3					2		1
4					2		1
	3				2		1
	4				2		1
	3				2		1
	4				2		1
					2		
					2		
			3		1	2	
			4		1	2	
			3		1	2	
			4		1	2	
			3		1	2	
			4		1	2	
				3		1	
				4		1	

Set of bolts details, see page 103

Connection to oil immersed transformers
By feed and connection plates or braids

Canalis KTC

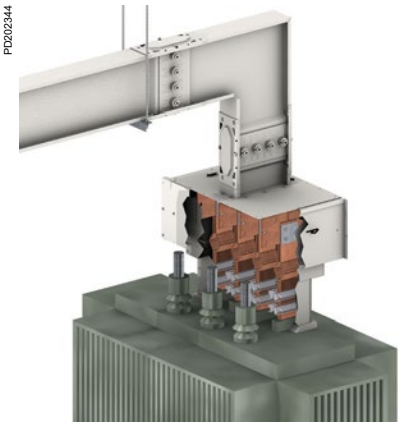

Connection to an oil immersed transformer is made using flexible bars (connection plates) to avoid transmitting transformer vibrations to the busbar trunking and to limit the stress on connection terminals.

Choice of busbar trunking

Dry-type transformer		Canalis KTC busbar trunking	
Rating (kVA)	I nominal (1) (A)	Rating (A)	Cross-section
630	887	1000	140 x 74
800	1126	1350	140 x 104
1000	1408	1600	140 x 124
1250	1760	2000	140 x 164
1600	2253	2500	140 x 204
2000	2816	3200	140 x 244
2500	3520	4000	140 x 324
3150	4435	5000	140 x 404

(1) I is given as an indication only and is calculated with U - 410 V.

Note: If, for reasons of busbar trunking operating conditions or performance requirements, you have to use a rating other than those defined in the above tables, consult us.

Protective cover width

Busbar trunking rating (A)	Dimensions "Y" of the feed
1350 to 1600	230
2000 to 3200	350
4000 to 5000	510

Recommended configurations for short-circuit withstand (connection plate L = 400 mm)

Vertical incomer

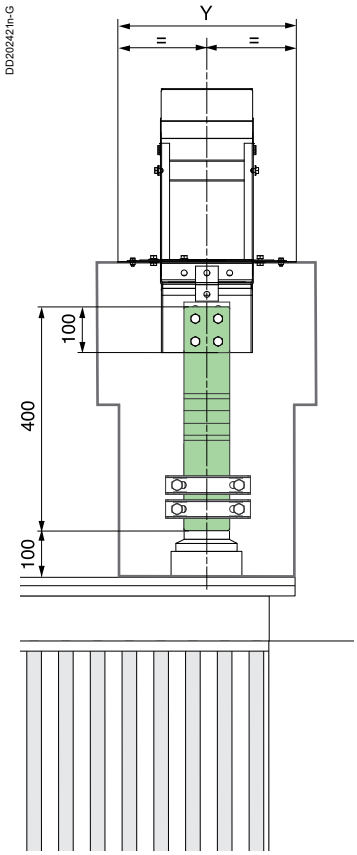

Horizontal incomer

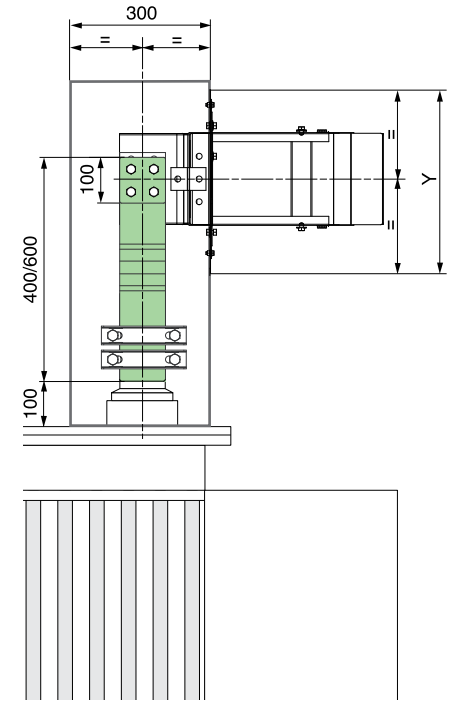

Connection to oil immersed transformers
By feed and connection plates or braids

Several connection possibilities

With connection plates with kink and bar clamp

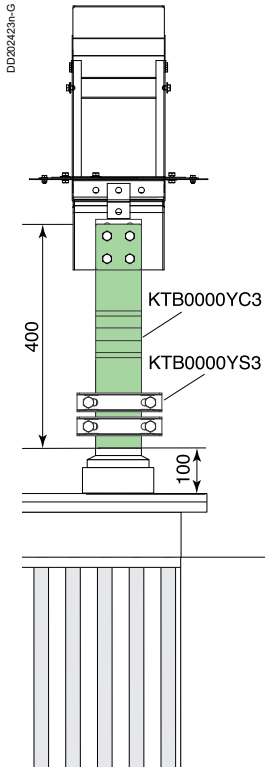

With connection plates with kink to be drilled

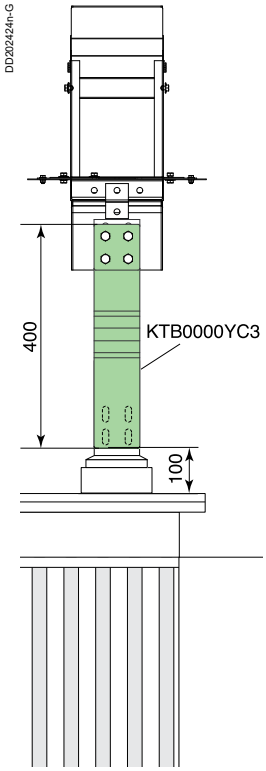

With drilled connection plates (KTB0000YC4) or braids

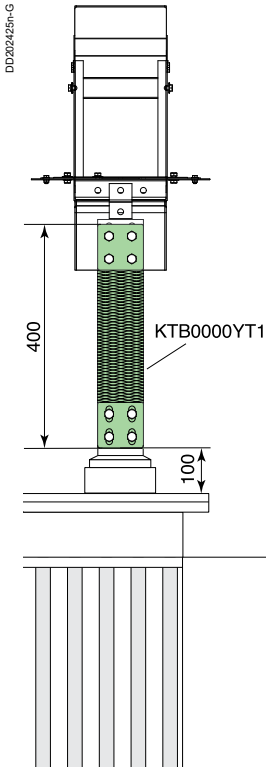

Phase order

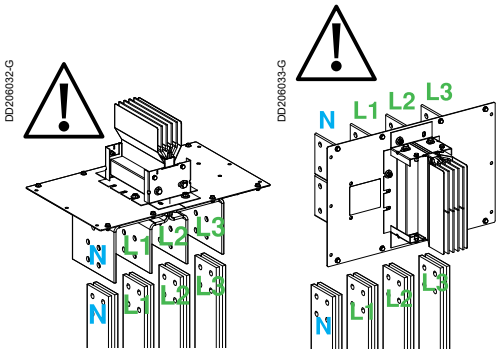

If the phase order of the busbar trunking is different to that of the switchboard's busbars, it is recommended a phase inversion is carried out in the switchboard. If this cannot be done, use the phase and neutral transposition section.
For more information on transposition sections, see "Description" page 33 and "Catalogue numbers / Dimensions" page 56.

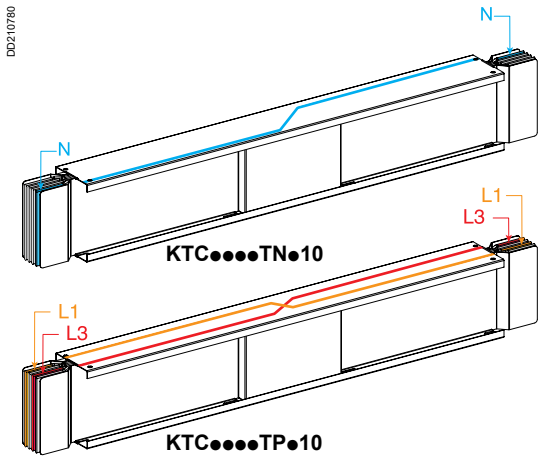

Connection to oil immersed transformers
By feed and connection plates or braids

Canalis KTC

Definition of connection plates

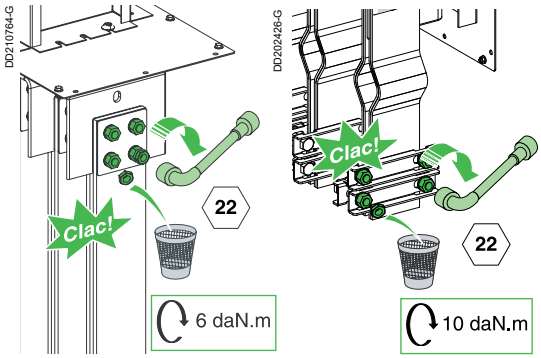

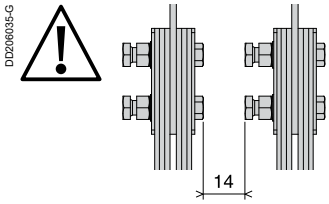

The number of connection plates is defined in the table below:

Busbar trunking rating (A)	Bare copper connection plates per phase	
	Number	Section (mm²)
1350	2 (100 x 5)	1000
1600	2 (100 x 5)	1000
2000	3 (100 x 5)	1500
2500	3 (100 x 5)	1500
3200	4 (100 x 5)	2000
4000	5 (100 x 5)	2500
5000	6 (100 x 5)	3000
6300	8 (120 x 5)	4800

Connection plates	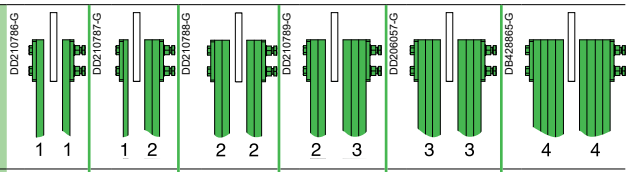					
Busbar trunking rating (A)	1350 to 1600	2000 to 2500	3200	4000	5000	6300

Definition of braids

The number of braids is defined in the table below:

Busbar trunking rating (A)	Braids per phase	
	Number	Cross-section (mm)
1350	2	1200
1600	2	1200
2000	2	1200
2500	3	1800
3200	3	1800
4000	4	2400
5000	5	3000
6300	8	4000

Braids	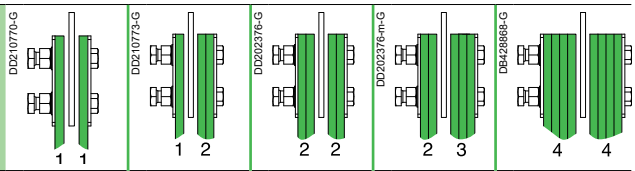				
Busbar trunking rating (A)	1350 to 2000	2500 to 3200	4000	5000	6300

Connection to porcelain bushings

Connection terminals of the type defined below must be used. These are available in the transformer manufacturers' catalogues.

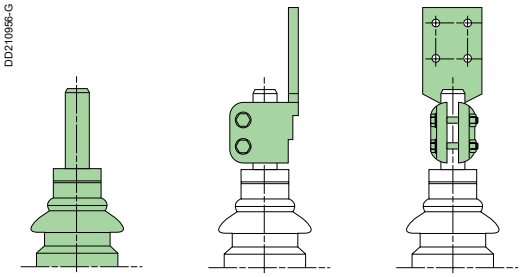

Cover

The transformers can be supplied with or without a low voltage cover. This cover is not used in our solutions.

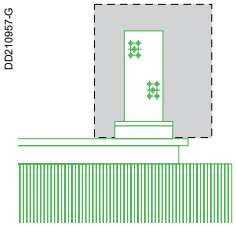

Recommendations

Introduction	3
Presentation and description	23
Catalogue numbers and dimensions	47
Design guide	141
Installation guide	181
Reception, handling and storage	**240**
Maintenance	**242**
Run sections	242
Recycling	**243**
Index	244

F

Reception, handling and storage

Canalis KTC

This document contains practical information, lays out the general recommendations (as a complement to the installation regulations) and specifies the basic instructions that must be respected when handling and storing Schneider Electric Canalis busbar trunking system.

The purchaser's engineering, installation and operating staff must become acquainted with this document and become familiar with the appearance and characteristics of each of the Canalis busbar trunking system's components. Appropriate planning and coordination between the different job functions is indispensable for ensuring an efficient installation of the equipment.

Each Canalis busbar trunking system is carefully inspected and packaged at the assembly plant.
The entire system is checked both structurally and electrically.
At the end of inspection, the busbar trunking system is prepared for shipping.
Each section is packed to guarantee easy handling before its installation.
The catalogue number is written on each shipping unit.

Warning

RISK OF ELECTRIC SHOCK, BURNS OR EXPLOSION

■ Protect the equipment against all contact with water, salt, concrete and other corrosive surroundings both before and during installation.
■ Outdoor equipment is not resistant to bad weather until after it has been fully and correctly installed.
■ Do not sit or walk on the equipment.

If these instructions are not respected, the equipment may deteriorate leading to a risk of serious or mortal injury.

Reception

Upon reception, check the information on the shipping note corresponds to the equipment received to ensure all of the order has been received and shipped. Complaints concerning missing components or other errors must be sent in writing to Schneider Electric SAS within 30 days from the date the shipping item was received. If no complaint has been received within 30 days from the date the shipping item was received, Schneider Electric SAS will no longer be responsible for repairs or replacements that may be required.

Upon reception, check the various units of the busbar trunking system immediately to identify any damage that has occurred during transport.
If there is observed or suspected damage, file a claim immediately with the carrier and inform the nearest Schneider Electric office.

Handling

Handle Canalis products with the greatest of care to avoid damaging the internal components of the system and to avoid changing the external appearance of the various parts, as well as the bar ends (connection terminals).

The busbar trunking must be constantly supported by independent means, in such a way its weight is not resting on the top of the transformers or distribution switchboards.
The distance between these support means must not exceed 3 metres.

Avoid exposing the busbar trunking to twisting, embossing or impacts, and all other actions likely to causing damage.

Ensure the handling equipment available at the site of installation is suitable for handling busbar trunking. In particular, check the lifting capacity of the crane or the other lifting equipment to be used.

Reception, handling and storage

Take great care when unpacking the equipment:
- use a nail-head puller when unpacking wooden crates
- if hauling the busbar trunking with a crane, use Nylon slings to spread the weight of the unit being lifted
- if using cables, insert a spacing means to avoid damaging the busbar trunking
- if using a forklift truck, position the busbar trunking on the forks in such a way the weight is evenly distributed.

1 - Cut the strapping holding the packaging case using suitable cutting tools.

2 - Use suitable tools to remove the strengthened steel packaging at each end of the busbar trunking.
Take care not to damage the steel box so as not to damage the busbar trunking.
Avoid the use of objects with sharp edges when lifting the busbar trunking.

3 - Dispose of all used packaging in an appropriate way.

Never drag the busbar trunking along the floor. Do not use the end bars to lift sections of the busbar trunking.

Protection against humidity during storage

If the busbar trunking is not installed and commissioned immediately, leave it in the original Canalis packaging and store it in a clean and dry place at a uniform temperature.

The busbar trunking must not be stored outside. However, if outside storage is necessary, cover the busbar trunking in such a way as to protect it from bad weather and to avoid contact with the elements.

Temporary electrical heating must be provided for underneath the covering means to prevent condensation.
The supplied heat must be of suitable temperature and uniformly distributed underneath the covering means.

Outdoor busbar trunking is not resistant to bad weather until after it has been fully and correctly installed.
During installation, take particular care to protect rising mains from humidity arising from unfinished roofs, walls and other similar elements.

Deserts can provide at least 2 specific situations for KT storage from standard other locations:
- sand pollution.
- significant thermal variations nights/days that can create condensation due to the colder busduct KT compared from atmosphere when it is humid (this risk should be evaluated from local context).
About sand: When the products are not installed but in their standard transport packings, we can’t completely guaranty the protection against sand/wind to not reach the products.
As it’s important to keep all electrical contacts clean from any foreign body and abrasion, our products must be protected from sand during storage period before and during installation.
The optionnal sea-packaging with wood boxes is including a waterproof system, it allows to keep the products protected against the 2 above risks.

Canalis KTC

Recommended periodical maintenance procedures

Electrical equipment should be installed, operated, serviced, and maintained only by qualified personnel.
No responsibility is assumed by Schneider Electric for any arising out of the use of this material.
A qualified person is one who has skills and knowledge related to the construction and operation of electrical equipment and its installation, and has received safety training to recognize and avoid the hazards involved.

The frequency and the level of the maintenance depend of the criticality of the application and the environmental conditions.
These recommendations regard the busbar trunking system. For all devices fitted in tap-off units, the manufacturer's recommendations must be complied with.

A basic maintenance must be performed for any type of applications, under any conditions

Every year inspect the external appearance of busbar trunking lengths, accessories and supports.

Check if there is no:
- deformation, damage or dirt
- dislocation, bending, misalignment and other abnormality of the connecting covers, hangers and plug-in units
- junction blocks or terminals discoloured, corroded or pitted, or show signs it has been exposed to high temperatures
- change in the environment that can affect the busway operation such as water, moisture, high temperature, corrosive gas, immoderate vibration, dust, air circulation, new hot air source.

Every year inspect the external appearance of tap-off units.

- Remove dust, water and oil deposits, and all other conductive bodies from the sensitive zones.

The contact between busbar trunking and tap-off boxes does not need specific maintenance: Busbar trunking contacts consist of sprung silver plated contact jaws to ensure optimum contact quality.

In event of electrical default, fire, water leakage, earthquake or any important change an immediate inspection must be carried out.

A more specific maintenance must be performed when the busbar trunking system feeds critical applications or in case of unfavourable environmental conditions

Critical applications means: needs of high level of continuity of service such as hospital secured power distribution, data centre IT or cooling power supply or with a high load factor.
Unfavourable conditions are: high ambient temperature, high level of humidity, environment with a lot of dust, vibrations or similar.

Every year achieve a basic maintenance as described in the above chapter.

Every year check is there is no abnormal temperature.

- If the busbar trunking is accessible, carry out infrared temperature measurements on all the electrical connections (junction blocks, terminal connections, tap-off units),
- If the busbar trunking is not accessible, install a thermal monitoring system which will communicate temperatures to a remote supervision.

These operations are relevant only if the busbar trunking has reached a stabilized temperature and if the measure of current has been done.

DB409492

Notice
A periodic thermal monitoring allows tracking and detecting abnormal drifts.
In case of abnormal results, check with a torque wrench, all the connections.

Type	Torque (N.m)
Junction block bolts	60 ± 10%

If these values decrease significantly over time, consult Schneider Electric for a deeper analysis.

If needed concerned material must be replaced with new factory mounted products. Consult your local Schneider Electric office for all replacements.

Before re-energising the busbar trunking, carry out an insulation resistance test in compliance with the instructions given in the "Testing and commissioning procedure" section.

After having performed all the necessary inspections and repairs mentioned above, it may be desirable to carry out infrared temperature measurements on all the electrical connections.

Recycling busbar trunking

DD205673_r

Example: 1 kg of PVC generates 1 kg of waste.

Canalis busbar trunking can be reused. Canalis busbar trunking is designed for a long service life and can easily be dismantled, cleaned and reused.

All packaging materials can be recycled (cardboard or recyclable polyethylene film).

All Canalis products are designed for safe end-of-life recycling. PVC, on the other hand, requires neutralisation of the hydrochloric acid produced using lime and generates dioxins that are extremely toxic.

Canalis helps conserve natural resources

The depletion of raw materials (copper, plastics, etc.) is one of our ongoing concerns.
For this reason, we have optimised the used of all materials used to make our busbar trunking.

- Reduction of dangerous or polluting materials. We design our products to meet future European directives.
- Reduction in the weight of insulating materials.
- Reduction in the use of plastics for improved fire performance: less energy released during combustion, thereby limiting propagation and facilitating extinction (lower calorific value).

Index of catalogue numbers

Cat. no.	Designations	Pages
13000		
13940	BLANKING PLATES, SET OF 10X5 MODULES FORR KAEDRA	122
30000		
33596	ARC-CHUTE COVER, FIXED NS, 3P	76
33597	ARC-CHUTE COVER, FIXED NS, 4P	76
40000		
47335	ARC-CHUTE COVER, FIXED NT, 3P	76
47336	ARC-CHUTE COVER, FIXED NT, 4P	76
80000		
87800	DBA 115 INSTALLATION KIT FOR KT BBT 800/4000A TDC	77
87801	DBA 115 INSTALLATION KIT FOR KT BBT 800/3200A RC	77
87808	SPECIAL TIGHTENING WRENCH BIT	77
KH0		
KH025SD541	KH BOX PLUG IN 3L N PE NSX250	134
KH025SD551	KH BOX PLUG IN 3L PEN NSX250	134
KH040SD9502	KH BOX PLUG IN 3L PEN SECT PEHLA 400 T2	137
KH040ZA07	CONNECTING BOX FOR KH040SD9502	137
KH063SD541	KH BOX PLUG IN 3L N PE NSX630	134
KH063SD551	KH BOX PLUG IN 3L PEN NSX630	134
KH063SD9502	KH BOX PLUG IN 3L PEN SECT PEHLA 630 T3	137
KH063ZA07	CONNECTING PLATE FOR KH063SD9502	137
KHB		
KHB0250SE4	KH PLUGIN 250 A FUS 3LN ADV L & R	135
KHB0250SE5	KH PLUGIN 250 A FUS 3LPEN ADV L & R	135
KHB0630SE4L	KH COFFRET 630 A FUS 3LN ADV L	136
KHB0630SE4R	KH COFFRET 630 A FUS 3LN ADV R	136
KHB0630SE5L	KH COFFRET 630 A FUS 3LPEN ADV L	136
KHB0630SE5R	KH COFFRET 630 A FUS 3LPEN ADV R	136
KSB		
KSB25SD4	TAP-OFF UNIT 25 A FUSE E27	117
KSB25SD5	TAP-OFF UNIT 25 A FUSE E27	117
KSB32SG4	CONNECTOR 32 A FUSE BS88A1	121
KSB50SF4	TAP-OFF UNIT 50 A FUSE 14X51	115
KSB50SF5	TAP-OFF UNIT 50 A FUSE 14X51	115
KSB50SN4	TAP-OFF UNIT 50 A FUSE E18	117
KSB50SN5	TAP-OFF UNIT 50 A FUSE E18	117
KSB63SD4	TAP-OFF UNIT 63 A FUSE E33	117
KSB63SD5	TAP-OFF UNIT 63 A FUSE E33	117
KSB63SM48	TAP-OFF UNIT 63 A 8 MODULES	110
KSB63SM58	TAP-OFF UNIT 63 A 8 MODULES	110
KSB80SG4	TAP-OFF UNIT 80 A FUSE BS88A1	121
KSB100SE4	TAP-OFF UNIT 100 A FUSE T00	116, 118
KSB100SE5	TAP-OFF UNIT 100 A FUSE T00	116, 118
KSB100SF4	TAP-OFF UNIT 100 A FUSE 22X58	115
KSB100SF5	TAP-OFF UNIT 100 A FUSE 22X58	115
KSB100SM412	TAP-OFF UNIT 100 A 12 MODULES	110
KSB100SM512	TAP-OFF UNIT 100 A 12 MODULES	110
KSB160DC4	TAP-OFF UNIT 160 A COMPACT NS	112
KSB160DC5	TAP-OFF UNIT 160 A COMPACT NS	112
KSB160SE4	TAP-OFF UNIT 160 A FUSE T00	116, 118
KSB160SE5	TAP-OFF UNIT 160 A FUSE T00	116, 118
KSB160SF4	TAP-OFF UNIT 160 A FUSE T0	116
KSB160SF5	TAP-OFF UNIT 160 A FUSE T0	116
KSB160SG4	TAP-OFF UNIT 160 A FUSE BS88	121
KSB160SM413	TAP-OFF UNIT NG 160 A	111
KSB160SM513	TAP-OFF UNIT NG 160 A	111
KSB250DC4	TAP-OFF UNIT 250 A COMPACT NS	112
KSB250DC4TRE	TAP-OFF UNIT 250 A COMPACT NS TRE	113
KSB250DC5	TAP-OFF UNIT 250 A COMPACT NS	112
KSB250DC5TRE	TAP-OFF UNIT 250 A COMPACT NS TRE	113
KSB250SE4	TAP-OFF UNIT 250 A FUSE T1	116, 118
KSB250SE5	TAP-OFF UNIT 250 A FUSE T1	116, 118
KSB400DC4	TAP-OFF UNIT 400 A COMPACT NS	112
KSB400DC4TRE	TAP-OFF UNIT 400 A COMPACT NS TRE	113
KSB400DC5	TAP-OFF UNIT 400 A COMPACT NS	112
KSB400DC5TRE	TAP-OFF UNIT 400 A COMPACT NS TRE	113
KSB400SE4	TAP-OFF UNIT 400 A FUSE T2	116, 118
KSB400SE5	TAP-OFF UNIT 400 A FUSE T2	116, 118
KSB400ZC1	TAP-OFF UNIT DOOR MICROSWITCH 400 A	122
KTB		
KTB0000CR4	KT VERT COVER FEED EL N1 TO 4	97
KTB0000CR5	KT HORI COVER FEED EL N1 TO 4	97
KTB0000GP01	KT PLAQUE CABLE 5 X 24 TO 40	120, 135, 136
KTB0000GP02	KT PLAQUE CABLE 1 X 30 TO 70	120, 135, 136
KTB0000GP03	KT PLAQUE CABLE 2 X 30 TO 70	120, 135, 136
KTB0000SC1	CANALIS KT FIRE BARRIER SEALANT	109
KTB0000YB1	KT BOLT SNAP-OF HEAD	103
KTB0000YB2	KT SCREWS M12X60 NUTS & PLATES	103
KTB0000YB3	KT SCREWS M12X60 & TORQUE NUTS	103
KTB0000YB4	KT SCREWS M12X80 & TORQUE NUTS	103
KTB0000YB5	CANALIS KT SCREWS M10X60 & NUTS	103
KTB0000YB6	CANALIS KT T BOLT	107
KTB0000YE1	KT L PLATE 160	96
KTB0000YE21	KT L PLATE 200 X 1	96
KTB0000YE22	KT L PLATE 200 X 2	96
KTB0000YE23	KT L PLATE 200 X 3	96
KTB0000YF1	KT INSULATING SHEATH	103
KTB0000YP11	CANALIS KT CONNECTION PLATE N1	104
KTB0000YP12	CANALIS KT CONNECTION PLATE N2	104
KTB0000YP13	CANALIS KT CONNECTION PLATE N3	104
KTB0000YP14	CANALIS KT CONNECTION PLATE N4	104
KTB0000YP21	KT CONNECTION PLATE HORI ER1 TO ER6	105
KTB0000YP22	KT CONNECTION PLATE VERT ER1 TO ER6	105
KTB0000YS1	KT SUPPORT FOR BARS DBA115	104
KTB0000YS2	KT CLAMP 100	104
KTB0000YS3	KT CLAMP 120	104
KTB0000YT1	KT BRAID 600MM2 L400 8	102
KTB0000ZA1	KT HORI FIXING BRACKED	106
KTB0000ZA3	KT FIXING GRIP	106
KTB0000ZA7	CANALIS KT FLAT WISE SUPPORT 3M	107
KTB0000ZA8	KT FLAT WISE FIXING GRIP	107
KTB0001CR5	KT VERT COVER FEED EL N1 TO N2	99
KTB0001CR6	KT HORI COVER FEED EL N1 TO N2	99
KTB0074CF6	KT FIRE BARRIER KIT H74 L650	109
KTB0074FA	KT END COVER H74	58
KTB0074TT01	KT KT ROOF PLATE H74	78
KTB0074ZA4	KT HORI TOP BRACKED H74	106
KTB0100YC105B	CANALIS KT LINK BI STRAIGHT 100 X MTM	100
KTB0100YC305B	CANALIS KT LINK BI WAVY 100 X MTM	100
KTB0100YC50506B	CANALIS KT LINK BI INSULATED 100 X 600	101
KTB0100YC50510B	CANALIS KT LINK BI INSULATED 100 X 1000	101
KTB0104CF6	KT FIRE BARRIER KIT H104 L650	109
KTB0104FA	KT END COVER H104	58
KTB0104TT01	KT KT ROOF PLATE H104	78
KTB0120YC105B	CANALIS KT LINK BI STRAIGHT 120 X MTM	100
KTB0120YC305B	CANALIS KT LINK BI WAVY 120 X MTM	100

Index of catalogue numbers

Cat. no.	Designations	Pages
KTB0124CF6	KT FIRE BARRIER KIT H124 L650	109
KTB0124FA	KT END COVER H124	58
KTB0124TT01	KT KT ROOF PLATE H124	78
KTB0124ZA7	CANALIS KT FLAT WISE SUPPORT H124	107
KTB0164CF7	KT FIRE BARRIER KIT H164 L750	109
KTB0164FA	KT END COVER H164	58
KTB0164PE1	KT END COVER H164	74, 75, 77, 78
KTB0164TT01	KT KT ROOF PLATE H164	78
KTB0164ZA51	CANALIS KT VERTICAL SUPPORT H74A164	108
KTB0164ZA52	CANALIS KT WALL BRACKET H74A164	108
KTB0204CF7	KT FIRE BARRIER KIT H204 L750	109
KTB0204FA	KT END COVER H204	58
KTB0204TT01	KT KT ROOF PLATE H204	78
KTB0204ZA51	CANALIS KT VERTICAL SUPPORT H204	108
KTB0204ZA52	CANALIS KT WALL BRACKET H204	108
KTB0204ZA7	CANALIS KT FLAT WISE SUPPORT H204	107
KTB0230BC01	KT CABLES BOX Y230	90
KTB0230CR1	KT HORI COVER FEED ER Y230	86
KTB0230CR2	KT HIGH VERT COVER FEED Y230	87
KTB0230CR3	KT LOW VERT COVER FEED Y230	87
KTB0230CR6	KT HORI COVER FEED EL N5 Y230	98
KTB0230CR71	CANALIS KT HORI COVER FOR OIL TR Y230 N1	88
KTB0230CR81	CANALIS KT VERT COVER FOR OIL TR Y230 N1	89
KTB0230CS0	KT FLEXIBLE COVER Y230 E115	90
KTB0244CF7	KT FIRE BARRIER KIT H244 L750	109
KTB0244FA	KT END COVER H244	58
KTB0244PE1	KT END COVER H244	74, 77, 78
KTB0244TT01	KT KT ROOF PLATE H244	78
KTB0244ZA51	CANALIS KT VERTICAL SUPPORT H244	108
KTB0244ZA52	CANALIS KT WALL BRACKET H244	108
KTB0244ZA7	CANALIS KT FLAT WISE SUPPORT H244	107
KTB0324CF9	KT FIRE BARRIER KIT H324 L950	109
KTB0324FA	KT END COVER H324	58
KTB0324TT01	KT KT ROOF PLATE H324	78
KTB0324ZA51	CANALIS KT VERTICAL SUPPORT H324	108
KTB0324ZA52	CANALIS KT WALL BRACKET H324	108
KTB0324ZA7	CANALIS KT FLAT WISE SUPPORT H304	107
KTB0350BC01	KT CABLES BOX Y350	90
KTB0350CR1	KT HORI COVER FEED ER Y350	86
KTB0350CR2	KT HIGH VERT COVER FEED Y350	87
KTB0350CR3	KT LOW VERT COVER FEED Y350	87
KTB0350CR6	KT HORI COVER FEED EL N5 Y350	98
KTB0350CR71	CANALIS KT HORI COVER FOR OIL TR Y350 N1	88
KTB0350CR72	CANALIS KT HORI COVER FOR OIL TR Y350 N2	88
KTB0350CR73	CANALIS KT HORI COVER FOR OIL TR Y350 N3	88
KTB0350CR74	CANALIS KT HORI COVER FOR OIL TR Y350 N4	88
KTB0350CR81	CANALIS KT VERT COVER FOR OIL TR Y350 N1	89
KTB0350CR82	KT VCANALIS KT VERT COVER FOR OIL TR Y350 N2	89
KTB0350CR83	KT VCANALIS KT VERT COVER FOR OIL TR Y350 N3	89
KTB0350CS0	KT FLEXIBLE COVER Y350 E115	90
KTB0350HT01	KT CONNECTION KHF KGF Y350 N1	130
KTB0350HT02	KT CONNECTION KHF KGF Y350 N2	130
KTB0404CF9	KT FIRE BARRIER KIT H404 L950	109
KTB0404FA	KT END COVER H404	58
KTB0404PE1	KT END COVER H404	74, 77, 78
KTB0404TT01	KT KT ROOF PLATE H404	78
KTB0404ZA4	KT HORI TOP BRACKED H104 A 404	106
KTB0404ZA51	CANALIS KT VERTICAL SUPPORT H404	108
KTB0404ZA52	CANALIS KT WALL BRACKET H404	108
KTB0404ZA7	CANALIS KT FLAT WISE SUPPORT H404	107
KTB04703	CANALIS INTERFACE, 1600 A, 3P	75
KTB04704	CANALIS INTERFACE, 1600 A, 4P	75
KTB04715	CANALIS CONNECTION, 1600 A, NW, 3P	74
KTB04716	CANALIS CONNECTION, 1600 A, NW, 4P	74
KTB04725	CANALIS CONNECTION, 2500 A, NW, 3P	74
KTB04726	CANALIS CONNECTION, 2500 A, NW, 4P	74
KTB04735	CANALIS CONNECTION, 3200 A, NW, 3P	74
KTB04736	CANALIS CONNECTION, 3200 A, NW, 4P	74
KTB04737	CANALIS CONNECTION, 4000 A, NW, 3P	74
KTB04738	CANALIS CONNECTION, 4000 A, NW, 4P	74
KTB0510BC01	KT CABLES BOX Y510	90
KTB0510CR1	KT HORI COVER FEED ER Y510	86
KTB0510CR2	KT HIGH VERT COVER FEED Y510	87
KTB0510CR3	KT LOW VERT COVER FEED Y510	87
KTB0510CR6	KT HORI COVER FEED EL N5 Y510	98
KTB0510CR71	CANALIS KT HORI COVER FOR OIL TR Y510 N1	88
KTB0510CR72	CANALIS KT HORI COVER FOR OIL TR Y510 N2	88
KTB0510CR73	CANALIS KT HORI COVER FOR OIL TR Y510 N3	88
KTB0510CR81	CANALIS KT VERT COVER FOR OIL TR Y510 N1	89
KTB0510CR82	CANALIS KT VERT COVER FOR OIL TR Y510 N2	89
KTB0510CS0	KT FLEXIBLE COVER Y510 E115	90
KTB0510HT01	KT CONNECTION KHF KGF Y510 N1	130
KTB0510HT02	KT CONNECTION KHF KGF Y510 N2	130
KTB0510HT03	KT CONNECTION KHF KGF Y510 N3	130
KTB0622CF7	KT FIRE BARRIER KIT H622 L750	109
KTB0622FA	KT END COVER H622	58
KTB0622PE1	KT REINFORCED PROTECTIVE EARTH H622	74, 77, 78
KTB0622TT01	KT KT ROOF PLATE H622	78
KTB0622ZA7	CANALIS KT FLAT WISE SUPPORT H622	107
KTB0630CB3	KT FIXED TAP-OFF 3L PE NS630	123
KTB0630CB4	KT FIXED TAP-OFF 3L N PE NS630	123
KTB0630CB5	KT FIXED TAP-OFF 3L PEN NS630	123
KTB0630DC4	KT PLUGIN 630A NSX 3LN	114
KTB0630DC5	KT PLUGIN 630A NSX 3LPEN	114
KTB0630HF3	KT COFF 3L PE FUS SWITCH 630	124
KTB0630HF4	KT COFF 3L N PE FUS SWITCH 630	124
KTB0630HF5	KT COFF 3L PEN FUS SWITCH 630	124
KTB0630SD4	KT PLUGIN 630A FUS 3LN	119
KTB0630SD5	KT PLUGIN 630A FUS 3LPEN	119
KTB0630SE4L	KT COFFRET 630A FUS 3LN ADV L	120
KTB0630SE4R	KT COFFRET 630A FUS 3LN ADV R	120
KTB0630SE5L	KT COFFRET 630A FUS 3LPEN ADV L	120
KTB0630SE5R	KT COFFRET 630A FUS 3LPEN ADV R	120
KTB0630ZA01	KT CONNECTION BARS KIT 630 NSX	114
KTB0630ZA02	KT CONNECTION BARS KIT 630 FUSE	119
KTB0630ZA03	KT ROTARY HANDLE FOR FUSES	119, 120, 136
KTB0630ZA04	KT CONNECTING BOX	114, 119, 120, 135, 136
KTB0726CR1	KT HORI COVER FEED ER Y726	86
KTB0726CR3	KT LOW VERT COVER FEED Y726	87
KTB0726CR71	KT HORI COVER FEED ER Y726	88
KTB0726CR81	KT LOW VERT COVER FEED Y726	89
KTB1000CB3	KT FIXED TAP-OFF 3L PE NS1000	123
KTB1000CB4	KT FIXED TAP-OFF 3L N PE NS1000	123
KTB1000CB5	KT FIXED TAP-OFF 3L PEN NS1000	123
KTB1000HF3	KT COFF 3L PE FUS SWITCH 1000	124

Index of catalogue numbers

Cat. no.	Designations	Pages
KTB1000HF4	KT COFF 3L N PE FUS SWITCH 1000	124
KTB1000HF5	KT COFF 3L PEN FUS SWITCH 1000	124
KTB1203	DBA 230 CONNECTING BLOCK FOR KT BBT 5000 A 3P RC CANALIS	77
KTB1204	DBA 230 CONNECTING BLOCK FOR KT BBT 5000 A 4P RC CANALIS	77
KTB1207	DBA 230 CONNECTING BLOCK FOR KT BBT 6300 A 3P RC CANALIS	77
KTB1208	DBA 230 CONNECTING BLOCK FOR KT BBT 6300 A 4P RC CANALIS	77
KTB1250CB3	KT COFF BOULO 3L PEN NS1000	123
KTB1250CB4	KT COFF BOULO 3L PEN NS1000	123
KTB1250CB5	KT COFF BOULO 3L PEN NS1000	123
KTB87811	DBA 115 CONNECTING BLOCK FOR KT BBT 800/1600A 3P TDC	77
KTB87812	DBA 115 CONNECTING BLOCK FOR KT BBT 800/1600A 4P TDC	77
KTB87813	DBA 115 CONNECTING BLOCK FOR KT BBT 2000/2500A 3P TDC	77
KTB87814	DBA 115 CONNECTING BLOCK FOR KT BBT 2000/2500A 4P TDC	77
KTB87815	DBA 115 CONNECTING BLOCK FOR KT BBT 3200A 3P TDC	77
KTB87816	DBA 115 CONNECTING BLOCK FOR KT BBT 3200A 4P TDC	77
KTB87817	DBA 115 CONNECTING BLOCK FOR KT BBT 4000A 3P TDC	77
KTB87818	DBA 115 CONNECTING BLOCK FOR KT BBT 4000A 4P TDC	77
KTB87821	DBA 115 CONNECTING BLOCK FOR KT BBT 800/1600A 3P RC	77
KTB87822	DBA 115 CONNECTING BLOCK FOR KT BBT 800/1600A 4P RC	77
KTB87823	DBA 115 CONNECTING BLOCK FOR KT BBT 2000/2500A 3P RC	77
KTB87824	DBA 115 CONNECTING BLOCK FOR KT BBT 2000/2500A 4P RC	77
KTB87825	DBA 115 CONNECTING BLOCK FOR KT BBT 3200A 3P RC	77
KTB87826	DBA 115 CONNECTING BLOCK FOR KT BBT 3200A 4P RC	77
KTB87827	DBA 115 CONNECTING BLOCK FOR KT BBT 4000A 3P RC	77
KTB87828	DBA 115 CONNECTING BLOCK FOR KT BBT 4000A 4P RC	77

KTC1000

KTC1000CP31	KT 3X1000CO FLAT EDGEWISE N1	68
KTC1000CP32	KT 3X1000CO FLAT EDGEWISE N2	68
KTC1000CP33	KT 3X1000CO FLAT EDGEWISE N3	68
KTC1000CP34	KT 3X1000CO FLAT EDGEWISE N4	68
KTC1000CP41	KT 4X1000CO FLAT EDGEWISE N1	68
KTC1000CP42	KT 4X1000CO FLAT EDGEWISE N2	68
KTC1000CP43	KT 4X1000CO FLAT EDGEWISE N3	68
KTC1000CP44	KT 4X1000CO FLAT EDGEWISE N4	68
KTC1000CP51	KT 5X1000CO FLAT EDGEWISE N1	68
KTC1000CP52	KT 5X1000CO FLAT EDGEWISE N2	68
KTC1000CP53	KT 5X1000CO FLAT EDGEWISE N3	68
KTC1000CP54	KT 5X1000CO FLAT EDGEWISE N4	68
KTC1000CP71	KT 5X1000CO FLAT EDGEWISE N1	68
KTC1000CP72	KT 5X1000CO FLAT EDGEWISE N2	68
KTC1000CP73	KT 5X1000CO FLAT EDGEWISE N3	68
KTC1000CP74	KT 5X1000CO FLAT EDGEWISE N4	68
KTC1000DB310	KT 3X1000CO EXPANSION UNIT	56
KTC1000DB410	KT 4X1000CO EXPANSION UNIT	56
KTC1000DB510	KT 5X1000CO EXPANSION UNIT	56
KTC1000DB710	KT 5X1000CO EXPANSION UNIT	56
KTC1000EB320	KT 3X1000CO BOLT ON LENGTH 2M	52
KTC1000EB340	KT 3X1000CO BOLT ON LENGTH 4M	52
KTC1000EB420	KT 4X1000CO BOLT ON LENGTH 2M	52
KTC1000EB440	KT 4X1000CO BOLT ON LENGTH 4M	52
KTC1000EB520	KT 5X1000CO BOLT ON LENGTH 2M	52
KTC1000EB540	KT 5X1000CO BOLT ON LENGTH 4M	52
KTC1000EB720	KT 5X1000CO BOLT ON LENGTH 2M	52
KTC1000EB740	KT 5X1000CO BOLT ON LENGTH 4M	52
KTC1000ED3201	KT 1X1000CO PLUG-IN LENGTH 2M	50
KTC1000ED3203	KT 3X1000CO PLUG-IN LENGTH 2M	50
KTC1000ED3301	KT 1X1000CO PLUG-IN LENGTH	50
KTC1000ED3302	KT 2X1000CO PLUG-IN LENGTH	50
KTC1000ED3351	KT 1X1000CO PLUG-IN LENGTH	50
KTC1000ED3353	KT 3X1000CO PLUG-IN LENGTH	50
KTC1000ED3403	KT 3X1000CO PLUG-IN LENGTH 4M	50
KTC1000ED4201	KT 1X1000CO PLUG-IN LENGTH 2M	50
KTC1000ED4203	KT 4X1000CO PLUG-IN LENGTH 2M	50
KTC1000ED4301	KT 1X1000CO PLUG-IN LENGTH	50
KTC1000ED4302	KT 2X1000CO PLUG-IN LENGTH	50
KTC1000ED4351	KT 1X1000CO PLUG-IN LENGTH	50
KTC1000ED4353	KT 3X1000CO PLUG-IN LENGTH	50
KTC1000ED4403	KT 4X1000CO PLUG-IN LENGTH 4M	50
KTC1000ED5201	KT 1X1000CO PLUG-IN LENGTH 2M	50
KTC1000ED5203	KT 5X1000CO PLUG-IN LENGTH 2M	50
KTC1000ED5301	KT 1X1000CO PLUG-IN LENGTH	50
KTC1000ED5302	KT 2X1000CO PLUG-IN LENGTH	50
KTC1000ED5351	KT 1X1000CO PLUG-IN LENGTH	50
KTC1000ED5353	KT 3X1000CO PLUG-IN LENGTH	50
KTC1000ED5403	KT 5X1000CO PLUG-IN LENGTH 4M	50
KTC1000ED7201	KT 1X1000CO PLUG-IN LENGTH 2M	50
KTC1000ED7203	KT 5X1000CO PLUG-IN LENGTH 2M	50
KTC1000ED7301	KT 1X1000CO PLUG-IN LENGTH	50
KTC1000ED7302	KT 2X1000CO PLUG-IN LENGTH	50
KTC1000ED7351	KT 1X1000CO PLUG-IN LENGTH	50
KTC1000ED7353	KT 3X1000CO PLUG-IN LENGTH	50
KTC1000ED7403	KT 5X1000CO PLUG-IN LENGTH 4M	50
KTC1000EH320	KT 3X1000CO KH PLUG-IN LENGTH 2M	53
KTC1000EH340	KT 3X1000CO KH PLUG-IN LENGTH 4M	53
KTC1000EH420	KT 4X1000CO KH PLUG-IN LENGTH 2M	53
KTC1000EH440	KT 4X1000CO KH PLUG-IN LENGTH 4M	53
KTC1000EH520	KT 5X1000CO KH PLUG-IN LENGTH 2M	53
KTC1000EH540	KT 5X1000CO KH PLUG-IN LENGTH 4M	53
KTC1000EH720	KT 5X1000CO KH PLUG-IN LENGTH 2M	53
KTC1000EH740	KT 5X1000CO KH PLUG-IN LENGTH 4M	53
KTC1000EL31	KT 3X1000CO FEED UNIT EL N1	92
KTC1000EL32	KT 3X1000CO FEED UNIT EL N2	92
KTC1000EL33	KT 3X1000CO FEED UNIT EL N3	94
KTC1000EL34	KT 3X1000CO FEED UNIT EL N4	94
KTC1000EL35	KT 3X1000CO FEED UNIT EL N5	95
KTC1000EL41	KT 4X1000CO FEED UNIT EL N1	92
KTC1000EL42	KT 4X1000CO FEED UNIT EL N2	92
KTC1000EL43	KT 4X1000CO FEED UNIT EL N3	94
KTC1000EL44	KT 4X1000CO FEED UNIT EL N4	94
KTC1000EL45	KT 4X1000CO FEED UNIT EL N5	95
KTC1000EL51	KT 5X1000CO FEED UNIT EL N1	92
KTC1000EL52	KT 5X1000CO FEED UNIT EL N2	92
KTC1000EL53	KT 5X1000CO FEED UNIT EL N3	94
KTC1000EL54	KT 5X1000CO FEED UNIT EL N4	94
KTC1000EL55	KT 5X1000CO FEED UNIT EL N5	95
KTC1000EL71	KT 5X1000CO FEED UNIT EL N1	92
KTC1000EL72	KT 5X1000CO FEED UNIT EL N2	92
KTC1000EL73	KT 5X1000CO FEED UNIT EL N3	94
KTC1000EL74	KT 5X1000CO FEED UNIT EL N4	94
KTC1000EL75	KT 5X1000CO FEED UNIT EL N5	95
KTC1000ER31	KT 3X1000CO FEED UNIT ER N1	79
KTC1000ER32	KT 3X1000CO FEED UNIT ER N2	79

Index of catalogue numbers

Cat. no.	Designations	Pages
KTC1000ER33	KT 3X1000CO FEED UNIT ER N3	80
KTC1000ER34	KT 3X1000CO FEED UNIT ER N4	80
KTC1000ER35	KT 3X1000CO FEED UNIT ER N5	81
KTC1000ER36	KT 3X1000CO FEED UNIT ER N6	81
KTC1000ER37	KT 3X1000CO FEED UNIT ER N7	85
KTC1000ER41	KT 4X1000CO FEED UNIT ER N1	79
KTC1000ER42	KT 4X1000CO FEED UNIT ER N2	79
KTC1000ER43	KT 4X1000CO FEED UNIT ER N3	80
KTC1000ER44	KT 4X1000CO FEED UNIT ER N4	80
KTC1000ER45	KT 4X1000CO FEED UNIT ER N5	81
KTC1000ER46	KT 4X1000CO FEED UNIT ER N6	81
KTC1000ER47	KT 4X1000CO FEED UNIT ER N7	85
KTC1000ER51	KT 5X1000CO FEED UNIT ER N1	79
KTC1000ER52	KT 5X1000CO FEED UNIT ER N2	79
KTC1000ER53	KT 5X1000CO FEED UNIT ER N3	80
KTC1000ER54	KT 5X1000CO FEED UNIT ER N4	80
KTC1000ER55	KT 5X1000CO FEED UNIT ER N5	81
KTC1000ER56	KT 5X1000CO FEED UNIT ER N6	81
KTC1000ER57	KT 5X1000CO FEED UNIT ER N7	85
KTC1000ER71	KT 5X1000CO FEED UNIT ER N1	79
KTC1000ER72	KT 5X1000CO FEED UNIT ER N2	79
KTC1000ER73	KT 5X1000CO FEED UNIT ER N3	80
KTC1000ER74	KT 5X1000CO FEED UNIT ER N4	80
KTC1000ER75	KT 5X1000CO FEED UNIT ER N5	81
KTC1000ER76	KT 5X1000CO FEED UNIT ER N6	81
KTC1000ER77	KT 5X1000CO FEED UNIT ER N7	85
KTC1000ET31A	KT 3X1000CO FEEDER LENGTH	50
KTC1000ET320	KT 3X1000CO FEEDER LENGTH 2M	50
KTC1000ET32B	KT 3X1000CO FEEDER LENGTH	50
KTC1000ET32C	KT 3X1000CO FEEDER LENGTH	50
KTC1000ET33D	KT 3X1000CO FEEDER LENGTH	50
KTC1000ET33E	KT 3X1000CO FEEDER LENGTH	50
KTC1000ET33F	KT 3X1000CO FEEDER LENGTH	50
KTC1000ET340	KT 3X1000CO FEEDER LENGTH 4M	50
KTC1000ET41A	KT 4X1000CO FEEDER LENGTH	50
KTC1000ET420	KT 4X1000CO FEEDER LENGTH 2M	50
KTC1000ET42B	KT 4X1000CO FEEDER LENGTH	50
KTC1000ET42C	KT 4X1000CO FEEDER LENGTH	50
KTC1000ET43D	KT 4X1000CO FEEDER LENGTH	50
KTC1000ET43E	KT 4X1000CO FEEDER LENGTH	50
KTC1000ET43F	KT 4X1000CO FEEDER LENGTH	50
KTC1000ET440	KT 4X1000CO FEEDER LENGTH 4M	50
KTC1000ET51A	KT 5X1000CO FEEDER LENGTH	50
KTC1000ET520	KT 5X1000CO FEEDER LENGTH 2M	50
KTC1000ET52B	KT 5X1000CO FEEDER LENGTH	50
KTC1000ET52C	KT 5X1000CO FEEDER LENGTH	50
KTC1000ET53D	KT 5X1000CO FEEDER LENGTH	50
KTC1000ET53E	KT 5X1000CO FEEDER LENGTH	50
KTC1000ET53F	KT 5X1000CO FEEDER LENGTH	50
KTC1000ET540	KT 5X1000CO FEEDER LENGTH 4M	50
KTC1000ET71A	KT 5X1000CO FEEDER LENGTH	50
KTC1000ET720	KT 5X1000CO FEEDER LENGTH 2M	50
KTC1000ET72B	KT 5X1000CO FEEDER LENGTH	50
KTC1000ET72C	KT 5X1000CO FEEDER LENGTH	50
KTC1000ET73D	KT 5X1000CO FEEDER LENGTH	50
KTC1000ET73E	KT 5X1000CO FEEDER LENGTH	50
KTC1000ET73F	KT 5X1000CO FEEDER LENGTH	50
KTC1000ET740	KT 5X1000CO FEEDER LENGTH 4M	50
KTC1000FC3A	KT 3X1000CO EDGEWISE ELBOW	73
KTC1000FC3B	KT 3X1000CO EDGEWISE ELBOW	73
KTC1000FC3D	KT 3X1000CO EDGEWISE ELBOW	73
KTC1000FC3E	KT 3X1000CO EDGEWISE ELBOW	73
KTC1000FC4A	KT 4X1000CO EDGEWISE ELBOW	73
KTC1000FC4B	KT 4X1000CO EDGEWISE ELBOW	73
KTC1000FC4D	KT 4X1000CO EDGEWISE ELBOW	73

Cat. no.	Designations	Pages
KTC1000FC4E	KT 4X1000CO EDGEWISE ELBOW	73
KTC1000FC5A	KT 5X1000CO EDGEWISE ELBOW	73
KTC1000FC5B	KT 5X1000CO EDGEWISE ELBOW	73
KTC1000FC5D	KT 5X1000CO EDGEWISE ELBOW	73
KTC1000FC5E	KT 5X1000CO EDGEWISE ELBOW	73
KTC1000FC7A	KT 5X1000CO EDGEWISE ELBOW	73
KTC1000FC7B	KT 5X1000CO EDGEWISE ELBOW	73
KTC1000FC7D	KT 5X1000CO EDGEWISE ELBOW	73
KTC1000FC7E	KT 5X1000CO EDGEWISE ELBOW	73
KTC1000FJ3	KT 3X1000CU JUNCTION BLOC FIRE RATED	71
KTC1000FJ4	KT 4X1000CU JUNCTION BLOC FIRE RATED	71
KTC1000FJ5	KT 5X1000CU JUNCTION BLOC FIRE RATED	71
KTC1000FJ7	KT 5X1000CU JUNCTION BLOC FIRE RATED	71
KTC1000FP3A1	KT 3X1000CO FLAT ELBOW N1 FIRE	72
KTC1000FP3A2	KT 3X1000CO FLAT ELBOW N2 FIRE	72
KTC1000FP3B1	KT 3X1000CO FLAT ELBOW N1 FIRE	72
KTC1000FP3B2	KT 3X1000CO FLAT ELBOW N2 FIRE	72
KTC1000FP3D1	KT 3X1000CO FLAT ELBOW N1 FIRE	72
KTC1000FP3D2	KT 3X1000CO FLAT ELBOW N2 FIRE	72
KTC1000FP3E1	KT 3X1000CO FLAT ELBOW N1 FIRE	72
KTC1000FP3E2	KT 3X1000CO FLAT ELBOW N2 FIRE	72
KTC1000FP4A1	KT 4X1000CO FLAT ELBOW N1 FIRE	72
KTC1000FP4A2	KT 4X1000CO FLAT ELBOW N2 FIRE	72
KTC1000FP4B1	KT 4X1000CO FLAT ELBOW N1 FIRE	72
KTC1000FP4B2	KT 4X1000CO FLAT ELBOW N2 FIRE	72
KTC1000FP4D1	KT 4X1000CO FLAT ELBOW N1 FIRE	72
KTC1000FP4D2	KT 4X1000CO FLAT ELBOW N2 FIRE	72
KTC1000FP4E1	KT 4X1000CO FLAT ELBOW N1 FIRE	72
KTC1000FP4E2	KT 4X1000CO FLAT ELBOW N2 FIRE	72
KTC1000FP5A1	KT 5X1000CO FLAT ELBOW N1 FIRE	72
KTC1000FP5A2	KT 5X1000CO FLAT ELBOW N2 FIRE	72
KTC1000FP5B1	KT 5X1000CO FLAT ELBOW N1 FIRE	72
KTC6300FP4E2	KT 5X1000CO FLAT ELBOW N2 FIRE	72
KTC1000FP5D1	KT 5X1000CO FLAT ELBOW N1 FIRE	72
KTC1000FP5D2	KT 5X1000CO FLAT ELBOW N2 FIRE	72
KTC1000FP5E1	KT 5X1000CO FLAT ELBOW N1 FIRE	72
KTC1000FP5E2	KT 5X1000CO FLAT ELBOW N2 FIRE	72
KTC1000FP7A1	KT 5X1000CO FLAT ELBOW N1 FIRE	72
KTC1000FP7A2	KT 5X1000CO FLAT ELBOW N2 FIRE	72
KTC1000FP7B1	KT 5X1000CO FLAT ELBOW N1 FIRE	72
KTC1000FP7B2	KT 5X1000CO FLAT ELBOW N2 FIRE	72
KTC1000FP7D1	KT 5X1000CO FLAT ELBOW N1 FIRE	72
KTC1000FP7D2	KT 5X1000CO FLAT ELBOW N2 FIRE	72
KTC1000FP7E1	KT 5X1000CO FLAT ELBOW N1 FIRE	72
KTC1000FP7E2	KT 5X1000CO FLAT ELBOW N2 FIRE	72
KTC1000FT31A	KT 3X1000CO FEEDER LENGTH FIRE	70
KTC1000FT320	KT 3X1000CO FEEDER LENGTH FIRE 2M	70
KTC1000FT32B	KT 3X1000CO FEEDER LENGTH FIRE	70
KTC1000FT32C	KT 3X1000CO FEEDER LENGTH FIRE	70
KTC1000FT33D	KT 3X1000CO FEEDER LENGTH FIRE	70
KTC1000FT33E	KT 3X1000CO FEEDER LENGTH FIRE	70
KTC1000FT33F	KT 3X1000CO FEEDER LENGTH FIRE	70
KTC1000FT340	KT 3X1000CO FEEDER LENGTH FIRE 4M	70
KTC1000FT41A	KT 4X1000CO FEEDER LENGTH FIRE	70
KTC1000FT420	KT 4X1000CO FEEDER LENGTH FIRE 2M	70
KTC1000FT42B	KT 4X1000CO FEEDER LENGTH FIRE	70
KTC1000FT42C	KT 4X1000CO FEEDER LENGTH FIRE	70
KTC1000FT43D	KT 4X1000CO FEEDER LENGTH FIRE	70
KTC1000FT43E	KT 4X1000CO FEEDER LENGTH FIRE	70
KTC1000FT43F	KT 4X1000CO FEEDER LENGTH FIRE	70
KTC1000FT440	KT 4X1000CO FEEDER LENGTH FIRE 4M	70
KTC1000FT51A	KT 5X1000CO FEEDER LENGTH FIRE	70
KTC1000FT520	KT 5X1000CO FEEDER LENGTH FIRE 2M	70
KTC1000FT52B	KT 5X1000CO FEEDER LENGTH FIRE	70
KTC1000FT52C	KT 5X1000CO FEEDER LENGTH FIRE	70

Index of catalogue numbers

Cat. no.	Designations	Pages
KTC1000FT53D	KT 5X1000CO FEEDER LENGTH FIRE	70
KTC1000FT53E	KT 5X1000CO FEEDER LENGTH FIRE	70
KTC1000FT53F	KT 5X1000CO FEEDER LENGTH FIRE	70
KTC1000FT540	KT 5X1000CO FEEDER LENGTH FIRE 4M	70
KTC1000FT71A	KT 5X1000CO FEEDER LENGTH FIRE	70
KTC1000FT720	KT 5X1000CO FEEDER LENGTH FIRE 2M	70
KTC1000FT72B	KT 5X1000CO FEEDER LENGTH FIRE	70
KTC1000FT72C	KT 5X1000CO FEEDER LENGTH FIRE	70
KTC1000FT73D	KT 5X1000CO FEEDER LENGTH FIRE	70
KTC1000FT73E	KT 5X1000CO FEEDER LENGTH FIRE	70
KTC1000FT73F	KT 5X1000CO FEEDER LENGTH FIRE	70
KTC1000FT740	KT 5X1000CO FEEDER LENGTH FIRE 4M	70
KTC1000LC3A	KT 3X1000CO EDGEWISE ELBOW	61
KTC1000LC3B	KT 3X1000CO EDGEWISE ELBOW	61
KTC1000LC3D	KT 3X1000CO EDGEWISE ELBOW	61
KTC1000LC3E	KT 3X1000CO EDGEWISE ELBOW	61
KTC1000LC4A	KT 4X1000CO EDGEWISE ELBOW	61
KTC1000LC4B	KT 4X1000CO EDGEWISE ELBOW	61
KTC1000LC4D	KT 4X1000CO EDGEWISE ELBOW	61
KTC1000LC4E	KT 4X1000CO EDGEWISE ELBOW	61
KTC1000LC5A	KT 5X1000CO EDGEWISE ELBOW	61
KTC1000LC5B	KT 5X1000CO EDGEWISE ELBOW	61
KTC1000LC5D	KT 5X1000CO EDGEWISE ELBOW	61
KTC1000LC5E	KT 5X1000CO EDGEWISE ELBOW	61
KTC1000LC7A	KT 5X1000CO EDGEWISE ELBOW	61
KTC1000LC7B	KT 5X1000CO EDGEWISE ELBOW	61
KTC1000LC7D	KT 5X1000CO EDGEWISE ELBOW	61
KTC1000LC7E	KT 5X1000CO EDGEWISE ELBOW	61
KTC1000LP3A1	KT 3X1000CO FLAT ELBOW N1	60
KTC1000LP3A2	KT 3X1000CO FLAT ELBOW N2	60
KTC1000LP3B1	KT 3X1000CO FLAT ELBOW N1	60
KTC1000LP3B2	KT 3X1000CO FLAT ELBOW N2	60
KTC1000LP3C1	KT 3X1000CO FLAT ELBOW N1	61
KTC1000LP3C2	KT 3X1000CO FLAT ELBOW N2	61
KTC1000LP3D1	KT 3X1000CO FLAT ELBOW N1	60
KTC1000LP3D2	KT 3X1000CO FLAT ELBOW N2	60
KTC1000LP3E1	KT 3X1000CO FLAT ELBOW N1	60
KTC1000LP3E2	KT 3X1000CO FLAT ELBOW N2	60
KTC1000LP4A1	KT 4X1000CO FLAT ELBOW N1	60
KTC1000LP4A2	KT 4X1000CO FLAT ELBOW N2	60
KTC1000LP4B1	KT 4X1000CO FLAT ELBOW N1	60
KTC1000LP4B2	KT 4X1000CO FLAT ELBOW N2	60
KTC1000LP4C1	KT 4X1000CO FLAT ELBOW N1	61
KTC1000LP4C2	KT 4X1000CO FLAT ELBOW N2	61
KTC1000LP4D1	KT 4X1000CO FLAT ELBOW N1	60
KTC1000LP4D2	KT 4X1000CO FLAT ELBOW N2	60
KTC1000LP4E1	KT 4X1000CO FLAT ELBOW N1	60
KTC1000LP4E2	KT 4X1000CO FLAT ELBOW N2	60
KTC1000LP5A1	KT 5X1000CO FLAT ELBOW N1	60
KTC1000LP5A2	KT 5X1000CO FLAT ELBOW N2	60
KTC1000LP5B1	KT 5X1000CO FLAT ELBOW N1	60
KTC1000LP5B2	KT 5X1000CO FLAT ELBOW N2	60
KTC1000LP5C1	KT 5X1000CO FLAT ELBOW N1	61
KTC1000LP5C2	KT 5X1000CO FLAT ELBOW N2	61
KTC1000LP5D1	KT 5X1000CO FLAT ELBOW N1	60
KTC1000LP5D2	KT 5X1000CO FLAT ELBOW N2	60
KTC1000LP5E1	KT 5X1000CO FLAT ELBOW N1	60
KTC1000LP5E2	KT 5X1000CO FLAT ELBOW N2	60
KTC1000LP7A1	KT 5X1000CO FLAT ELBOW N1	60
KTC1000LP7A2	KT 5X1000CO FLAT ELBOW N2	60
KTC1000LP7B1	KT 5X1000CO FLAT ELBOW N1	60
KTC1000LP7B2	KT 5X1000CO FLAT ELBOW N2	60
KTC1000LP7C1	KT 5X1000CO FLAT ELBOW N1	61
KTC1000LP7C2	KT 5X1000CO FLAT ELBOW N2	61
KTC1000LP7D1	KT 5X1000CO FLAT ELBOW N1	60
KTC1000LP7D2	KT 5X1000CO FLAT ELBOW N2	60
KTC1000LP7E1	KT 5X1000CO FLAT ELBOW N1	60
KTC1000LP7E2	KT 5X1000CO FLAT ELBOW N2	60
KTC1000PL31	KT 3X1000CO LINE PROTECTOR NS	127
KTC1000PL41	KT 4X1000CO LINE PROTECTOR NS	127
KTC1000PL51	KT 5X1000CO LINE PROTECTOR NS	127
KTC1000PL71	KT 5X1000CO LINE PROTECTOR NS	127
KTC1000SL31	KT 3X1000CO ISOLATOR UNIT NA	125
KTC1000SL41	KT 4X1000CO ISOLATOR UNIT NA	125
KTC1000SL51	KT 5X1000CO ISOLATOR UNIT NA	125
KTC1000SL71	KT 5X1000CO ISOLATOR UNIT NA	125
KTC1000TC3	KT 3X1000CO TEE ON EDGE	65
KTC1000TC4	KT 4X1000CO TEE ON EDGE	65
KTC1000TC5	KT 5X1000CO TEE ON EDGE	65
KTC1000TC7	KT 5X1000CO TEE ON EDGE	65
KTC1000TN410	KT 4X1000CO NEUTRAL PERMUTA	56
KTC1000TP410	KT 4X1000CO PHASES PERMUTA	56
KTC1000YA3	KT 3X1000CO JUNCTION BLOC	58
KTC1000YA4	KT 4X1000CO JUNCTION BLOC	58
KTC1000YA5	KT 5X1000CO JUNCTION BLOC	58
KTC1000YA7	KT 5X1000CO JUNCTION BLOC	58
KTC1000ZC31	KT 3X1000CO EDGEWISE ZED N1	66
KTC1000ZC32	KT 3X1000CO EDGEWISE ZED N2	66
KTC1000ZC41	KT 4X1000CO EDGEWISE ZED N1	66
KTC1000ZC42	KT 4X1000CO EDGEWISE ZED N2	66
KTC1000ZC51	KT 5X1000CO EDGEWISE ZED N1	66
KTC1000ZC52	KT 5X1000CO EDGEWISE ZED N2	66
KTC1000ZC71	KT 5X1000CO EDGEWISE ZED N1	66
KTC1000ZC72	KT 5X1000CO EDGEWISE ZED N2	66
KTC1000ZP3	KT 3X1000CO ZED ON FLAT	66
KTC1000ZP4	KT 4X1000CO ZED ON FLAT	66
KTC1000ZP5	KT 5X1000CO ZED ON FLAT	66
KTC1000ZP7	KT 5X1000CO ZED ON FLAT	66
KTC1350		
KTC1350CP31	KT 3X1350CO FLAT EDGEWISE N1	68
KTC1350CP32	KT 3X1350CO FLAT EDGEWISE N2	68
KTC1350CP33	KT 3X1350CO FLAT EDGEWISE N3	68
KTC1350CP34	KT 3X1350CO FLAT EDGEWISE N4	68
KTC1350CP41	KT 4X1350CO FLAT EDGEWISE N1	68
KTC1350CP42	KT 4X1350CO FLAT EDGEWISE N2	68
KTC1350CP43	KT 4X1350CO FLAT EDGEWISE N3	68
KTC1350CP44	KT 4X1350CO FLAT EDGEWISE N4	68
KTC1350CP51	KT 5X1350CO FLAT EDGEWISE N1	68
KTC1350CP52	KT 5X1350CO FLAT EDGEWISE N2	68
KTC1350CP53	KT 5X1350CO FLAT EDGEWISE N3	68
KTC1350CP54	KT 5X1350CO FLAT EDGEWISE N4	68
KTC1350CP71	KT 5X1350CO FLAT EDGEWISE N1	68
KTC1350CP72	KT 5X1350CO FLAT EDGEWISE N2	68
KTC1350CP73	KT 5X1350CO FLAT EDGEWISE N3	68
KTC1350CP74	KT 5X1350CO FLAT EDGEWISE N4	68
KTC1350DB310	KT 3X1350CO EXPANSION UNIT	56
KTC1350DB410	KT 4X1350CO EXPANSION UNIT	56
KTC1350DB510	KT 5X1350CO EXPANSION UNIT	56
KTC1350DB710	KT 5X1350CO EXPANSION UNIT	56
KTC1350EB320	KT 3X1350CO BOLT ON LENGTH 2M	52
KTC1350EB340	KT 3X1350CO BOLT ON LENGTH 4M	52
KTC1350EB420	KT 4X1350CO BOLT ON LENGTH 2M	52
KTC1350EB440	KT 4X1350CO BOLT ON LENGTH 4M	52
KTC1350EB520	KT 5X1350CO BOLT ON LENGTH 2M	52
KTC1350EB540	KT 5X1350CO BOLT ON LENGTH 4M	52
KTC1350EB720	KT 5X1350CO BOLT ON LENGTH 2M	52
KTC1350EB740	KT 5X1350CO BOLT ON LENGTH 4M	52

Index of catalogue numbers

Cat. no.	Designations	Pages
KTC1350ED3201	KT 1X1350CO PLUG-IN LENGTH 2M	50
KTC1350ED3203	KT 3X1350CO PLUG-IN LENGTH 2M	50
KTC1350ED3301	KT 1X1350CO PLUG-IN LENGTH	50
KTC1350ED3302	KT 2X1350CO PLUG-IN LENGTH	50
KTC1350ED3351	KT 1X1350CO PLUG-IN LENGTH	50
KTC1350ED3353	KT 3X1350CO PLUG-IN LENGTH	50
KTC1350ED3403	KT 3X1350CO PLUG-IN LENGTH 4M	50
KTC1350ED4201	KT 1X1350CO PLUG-IN LENGTH 2M	50
KTC1350ED4203	KT 4X1350CO PLUG-IN LENGTH 2M	50
KTC1350ED4301	KT 1X1350CO PLUG-IN LENGTH	50
KTC1350ED4302	KT 2X1350CO PLUG-IN LENGTH	50
KTC1350ED4351	KT 1X1350CO PLUG-IN LENGTH	50
KTC1350ED4353	KT 3X1350CO PLUG-IN LENGTH	50
KTC1350ED4403	KT 4X1350CO PLUG-IN LENGTH 4M	50
KTC1350ED5201	KT 1X1350CO PLUG-IN LENGTH 2M	50
KTC1350ED5203	KT 5X1350CO PLUG-IN LENGTH 2M	50
KTC1350ED5301	KT 1X1350CO PLUG-IN LENGTH	50
KTC1350ED5302	KT 2X1350CO PLUG-IN LENGTH	50
KTC1350ED5351	KT 1X1350CO PLUG-IN LENGTH	50
KTC1350ED5353	KT 3X1350CO PLUG-IN LENGTH	50
KTC1350ED5403	KT 5X1350CO PLUG-IN LENGTH 4M	50
KTC1350ED7201	KT 1X1350CO PLUG-IN LENGTH 2M	50
KTC1350ED7203	KT 5X1350CO PLUG-IN LENGTH 2M	50
KTC1350ED7301	KT 1X1350CO PLUG-IN LENGTH	50
KTC1350ED7302	KT 2X1350CO PLUG-IN LENGTH	50
KTC1350ED7351	KT 1X1350CO PLUG-IN LENGTH	50
KTC1350ED7353	KT 3X1350CO PLUG-IN LENGTH	50
KTC1350ED7403	KT 5X1350CO PLUG-IN LENGTH 4M	50
KTC1350EH320	KT 3X1350CO KH PLUG-IN LENGTH 2M	53
KTC1350EH340	KT 3X1350CO KH PLUG-IN LENGTH 4M	53
KTC1350EH420	KT 4X1350CO KH PLUG-IN LENGTH 2M	53
KTC1350EH440	KT 4X1350CO KH PLUG-IN LENGTH 4M	53
KTC1350EH520	KT 5X1350CO KH PLUG-IN LENGTH 2M	53
KTC1350EH540	KT 5X1350CO KH PLUG-IN LENGTH 4M	53
KTC1350EH720	KT 5X1350CO KH PLUG-IN LENGTH 2M	53
KTC1350EH740	KT 5X1350CO KH PLUG-IN LENGTH 4M	53
KTC1350EL31	KT 3X1350CO FEED UNIT EL N1	92
KTC1350EL32	KT 3X1350CO FEED UNIT EL N2	92
KTC1350EL33	KT 3X1350CO FEED UNIT EL N3	94
KTC1350EL34	KT 3X1350CO FEED UNIT EL N4	94
KTC1350EL35	KT 3X1350CO FEED UNIT EL N5	95
KTC1350EL41	KT 4X1350CO FEED UNIT EL N1	92
KTC1350EL42	KT 4X1350CO FEED UNIT EL N2	92
KTC1350EL43	KT 4X1350CO FEED UNIT EL N3	94
KTC1350EL44	KT 4X1350CO FEED UNIT EL N4	94
KTC1350EL45	KT 4X1350CO FEED UNIT EL N5	95
KTC1350EL51	KT 5X1350CO FEED UNIT EL N1	92
KTC1350EL52	KT 5X1350CO FEED UNIT EL N2	92
KTC1350EL53	KT 5X1350CO FEED UNIT EL N3	94
KTC1350EL54	KT 5X1350CO FEED UNIT EL N4	94
KTC1350EL55	KT 5X1350CO FEED UNIT EL N5	95
KTC1350EL71	KT 5X1350CO FEED UNIT EL N1	92
KTC1350EL72	KT 5X1350CO FEED UNIT EL N2	92
KTC1350EL73	KT 5X1350CO FEED UNIT EL N3	94
KTC1350EL74	KT 5X1350CO FEED UNIT EL N4	94
KTC1350EL75	KT 5X1350CO FEED UNIT EL N5	95
KTC1350ER31	KT 3X1350CO FEED UNIT ER N1	79
KTC1350ER32	KT 3X1350CO FEED UNIT ER N2	79
KTC1350ER33	KT 3X1350CO FEED UNIT ER N3	80
KTC1350ER34	KT 3X1350CO FEED UNIT ER N4	80
KTC1350ER35	KT 3X1350CO FEED UNIT ER N5	81
KTC1350ER36	KT 3X1350CO FEED UNIT ER N6	81
KTC1350ER37	KT 3X1350CO FEED UNIT ER N7	85
KTC1350ER41	KT 4X1350CO FEED UNIT ER N1	79

Cat. no.	Designations	Pages
KTC1350ER42	KT 4X1350CO FEED UNIT ER N2	79
KTC1350ER43	KT 4X1350CO FEED UNIT ER N3	80
KTC1350ER44	KT 4X1350CO FEED UNIT ER N4	80
KTC1350ER45	KT 4X1350CO FEED UNIT ER N5	81
KTC1350ER46	KT 4X1350CO FEED UNIT ER N6	81
KTC1350ER47	KT 4X1350CO FEED UNIT ER N7	85
KTC1350ER51	KT 5X1350CO FEED UNIT ER N1	79
KTC1350ER52	KT 5X1350CO FEED UNIT ER N2	79
KTC1350ER53	KT 5X1350CO FEED UNIT ER N3	80
KTC1350ER54	KT 5X1350CO FEED UNIT ER N4	80
KTC1350ER55	KT 5X1350CO FEED UNIT ER N5	81
KTC1350ER56	KT 5X1350CO FEED UNIT ER N6	81
KTC1350ER57	KT 5X1350CO FEED UNIT ER N7	85
KTC1350ER71	KT 5X1350CO FEED UNIT ER N1	79
KTC1350ER72	KT 5X1350CO FEED UNIT ER N2	79
KTC1350ER73	KT 5X1350CO FEED UNIT ER N3	80
KTC1350ER74	KT 5X1350CO FEED UNIT ER N4	80
KTC1350ER75	KT 5X1350CO FEED UNIT ER N5	81
KTC1350ER76	KT 5X1350CO FEED UNIT ER N6	81
KTC1350ER77	KT 5X1350CO FEED UNIT ER N7	85
KTC1350ET31A	KT 3X1350CO FEEDER LENGTH	50
KTC1350ET320	KT 3X1350CO FEEDER LENGTH 2M	50
KTC1350ET32B	KT 3X1350CO FEEDER LENGTH	50
KTC1350ET32C	KT 3X1350CO FEEDER LENGTH	50
KTC1350ET33D	KT 3X1350CO FEEDER LENGTH	50
KTC1350ET33E	KT 3X1350CO FEEDER LENGTH	50
KTC1350ET33F	KT 3X1350CO FEEDER LENGTH	50
KTC1350ET340	KT 3X1350CO FEEDER LENGTH 4M	50
KTC1350ET41A	KT 4X1350CO FEEDER LENGTH	50
KTC1350ET420	KT 4X1350CO FEEDER LENGTH 2M	50
KTC1350ET42B	KT 4X1350CO FEEDER LENGTH	50
KTC1350ET42C	KT 4X1350CO FEEDER LENGTH	50
KTC1350ET43D	KT 4X1350CO FEEDER LENGTH	50
KTC1350ET43E	KT 4X1350CO FEEDER LENGTH	50
KTC1350ET43F	KT 4X1350CO FEEDER LENGTH	50
KTC1350ET440	KT 4X1350CO FEEDER LENGTH 4M	50
KTC1350ET51A	KT 5X1350CO FEEDER LENGTH	50
KTC1350ET520	KT 5X1350CO FEEDER LENGTH 2M	50
KTC1350ET52B	KT 5X1350CO FEEDER LENGTH	50
KTC1350ET52C	KT 5X1350CO FEEDER LENGTH	50
KTC1350ET53D	KT 5X1350CO FEEDER LENGTH	50
KTC1350ET53E	KT 5X1350CO FEEDER LENGTH	50
KTC1350ET53F	KT 5X1350CO FEEDER LENGTH	50
KTC1350ET540	KT 5X1350CO FEEDER LENGTH 4M	50
KTC1350ET71A	KT 5X1350CO FEEDER LENGTH	50
KTC1350ET720	KT 5X1350CO FEEDER LENGTH 2M	50
KTC1350ET72B	KT 5X1350CO FEEDER LENGTH	50
KTC1350ET72C	KT 5X1350CO FEEDER LENGTH	50
KTC1350ET73D	KT 5X1350CO FEEDER LENGTH	50
KTC1350ET73E	KT 5X1350CO FEEDER LENGTH	50
KTC1350ET73F	KT 5X1350CO FEEDER LENGTH	50
KTC1350ET740	KT 5X1350CO FEEDER LENGTH 4M	50
KTC1350FC3A	KT 3X1350CO EDGEWISE ELBOW	73
KTC1350FC3B	KT 3X1350CO EDGEWISE ELBOW	73
KTC1350FC3D	KT 3X1350CO EDGEWISE ELBOW	73
KTC1350FC3E	KT 3X1350CO EDGEWISE ELBOW	73
KTC1350FC4A	KT 4X1350CO EDGEWISE ELBOW	73
KTC1350FC4B	KT 4X1350CO EDGEWISE ELBOW	73
KTC1350FC4D	KT 4X1350CO EDGEWISE ELBOW	73
KTC1350FC4E	KT 4X1350CO EDGEWISE ELBOW	73
KTC1350FC5A	KT 5X1350CO EDGEWISE ELBOW	73
KTC1350FC5B	KT 5X1350CO EDGEWISE ELBOW	73
KTC1350FC5D	KT 5X1350CO EDGEWISE ELBOW	73
KTC1350FC5E	KT 5X1350CO EDGEWISE ELBOW	73

Index of catalogue numbers

Cat. no.	Designations	Pages
KTC1350FC7A	KT 5X1350CO EDGEWISE ELBOW	73
KTC1350FC7B	KT 5X1350CO EDGEWISE ELBOW	73
KTC1350FC7D	KT 5X1350CO EDGEWISE ELBOW	73
KTC1350FC7E	KT 5X1350CO EDGEWISE ELBOW	73
KTC1350FJ3	KT 3X1350CU JUNCTION BLOC FIRE RATED	71
KTC1350FJ4	KT 4X1350CU JUNCTION BLOC FIRE RATED	71
KTC1350FJ5	KT 5X1350CU JUNCTION BLOC FIRE RATED	71
KTC1350FJ7	KT 5X1350CU JUNCTION BLOC FIRE RATED	71
KTC1350FP3A1	KT 3X1350CO FLAT ELBOW N1 FIRE	72
KTC1350FP3A2	KT 3X1350CO FLAT ELBOW N2 FIRE	72
KTC1350FP3B1	KT 3X1350CO FLAT ELBOW N1 FIRE	72
KTC1350FP3B2	KT 3X1350CO FLAT ELBOW N2 FIRE	72
KTC1350FP3D1	KT 3X1350CO FLAT ELBOW N1 FIRE	72
KTC1350FP3D2	KT 3X1350CO FLAT ELBOW N2 FIRE	72
KTC1350FP3E1	KT 3X1350CO FLAT ELBOW N1 FIRE	72
KTC1350FP3E2	KT 3X1350CO FLAT ELBOW N2 FIRE	72
KTC1350FP4A1	KT 4X1350CO FLAT ELBOW N1 FIRE	72
KTC1350FP4A2	KT 4X1350CO FLAT ELBOW N2 FIRE	72
KTC1350FP4B1	KT 4X1350CO FLAT ELBOW N1 FIRE	72
KTC1350FP4B2	KT 4X1350CO FLAT ELBOW N2 FIRE	72
KTC1350FP4D1	KT 4X1350CO FLAT ELBOW N1 FIRE	72
KTC1350FP4D2	KT 4X1350CO FLAT ELBOW N2 FIRE	72
KTC1350FP4E1	KT 4X1350CO FLAT ELBOW N1 FIRE	72
KTC1350FP4E2	KT 4X1350CO FLAT ELBOW N2 FIRE	72
KTC1350FP5A1	KT 5X1350CO FLAT ELBOW N1 FIRE	72
KTC1350FP5A2	KT 5X1350CO FLAT ELBOW N2 FIRE	72
KTC1350FP5B1	KT 5X1350CO FLAT ELBOW N1 FIRE	72
KTC1350FP5B2	KT 5X1350CO FLAT ELBOW N2 FIRE	72
KTC1350FP5D1	KT 5X1350CO FLAT ELBOW N1 FIRE	72
KTC1350FP5D2	KT 5X1350CO FLAT ELBOW N2 FIRE	72
KTC1350FP5E1	KT 5X1350CO FLAT ELBOW N1 FIRE	72
KTC1350FP5E2	KT 5X1350CO FLAT ELBOW N2 FIRE	72
KTC1350FP7A1	KT 5X1350CO FLAT ELBOW N1 FIRE	72
KTC1350FP7A2	KT 5X1350CO FLAT ELBOW N2 FIRE	72
KTC1350FP7B1	KT 5X1350CO FLAT ELBOW N1 FIRE	72
KTC1350FP7B2	KT 5X1350CO FLAT ELBOW N2 FIRE	72
KTC1350FP7D1	KT 5X1350CO FLAT ELBOW N1 FIRE	72
KTC1350FP7D2	KT 5X1350CO FLAT ELBOW N2 FIRE	72
KTC1350FP7E1	KT 5X1350CO FLAT ELBOW N1 FIRE	72
KTC1350FP7E2	KT 5X1350CO FLAT ELBOW N2 FIRE	72
KTC1350FT31A	KT 3X1350CO FEEDER LENGTH FIRE	70
KTC1350FT320	KT 3X1350CO FEEDER LENGTH FIRE 2M	70
KTC1350FT32B	KT 3X1350CO FEEDER LENGTH FIRE	70
KTC1350FT32C	KT 3X1350CO FEEDER LENGTH FIRE	70
KTC1350FT33D	KT 3X1350CO FEEDER LENGTH FIRE	70
KTC1350FT33E	KT 3X1350CO FEEDER LENGTH FIRE	70
KTC1350FT33F	KT 3X1350CO FEEDER LENGTH FIRE	70
KTC1350FT340	KT 3X1350CO FEEDER LENGTH FIRE 4M	70
KTC1350FT41A	KT 4X1350CO FEEDER LENGTH FIRE	70
KTC1350FT420	KT 4X1350CO FEEDER LENGTH FIRE 2M	70
KTC1350FT42B	KT 4X1350CO FEEDER LENGTH FIRE	70
KTC1350FT42C	KT 4X1350CO FEEDER LENGTH FIRE	70
KTC1350FT43D	KT 4X1350CO FEEDER LENGTH FIRE	70
KTC1350FT43E	KT 4X1350CO FEEDER LENGTH FIRE	70
KTC1350FT43F	KT 4X1350CO FEEDER LENGTH FIRE	70
KTC1350FT440	KT 4X1350CO FEEDER LENGTH FIRE 4M	70
KTC1350FT51A	KT 5X1350CO FEEDER LENGTH FIRE	70
KTC1350FT520	KT 5X1350CO FEEDER LENGTH FIRE 2M	70
KTC1350FT52B	KT 5X1350CO FEEDER LENGTH FIRE	70
KTC1350FT52C	KT 5X1350CO FEEDER LENGTH FIRE	70
KTC1350FT53D	KT 5X1350CO FEEDER LENGTH FIRE	70
KTC1350FT53E	KT 5X1350CO FEEDER LENGTH FIRE	70
KTC1350FT53F	KT 5X1350CO FEEDER LENGTH FIRE	70
KTC1350FT540	KT 5X1350CO FEEDER LENGTH FIRE 4M	70
KTC1350FT71A	KT 5X1350CO FEEDER LENGTH FIRE	70

Cat. no.	Designations	Pages
KTC1350FT720	KT 5X1350CO FEEDER LENGTH FIRE 2M	70
KTC1350FT72B	KT 5X1350CO FEEDER LENGTH FIRE	70
KTC1350FT72C	KT 5X1350CO FEEDER LENGTH FIRE	70
KTC1350FT73D	KT 5X1350CO FEEDER LENGTH FIRE	70
KTC1350FT73E	KT 5X1350CO FEEDER LENGTH FIRE	70
KTC1350FT73F	KT 5X1350CO FEEDER LENGTH FIRE	70
KTC1350FT740	KT 5X1350CO FEEDER LENGTH FIRE 4M	70
KTC1350LC3A	KT 3X1350CO EDGEWISE ELBOW	61
KTC1350LC3B	KT 3X1350CO EDGEWISE ELBOW	61
KTC1350LC3D	KT 3X1350CO EDGEWISE ELBOW	61
KTC1350LC3E	KT 3X1350CO EDGEWISE ELBOW	61
KTC1350LC4A	KT 5X1350CO EDGEWISE ELBOW	61
KTC1350LC4B	KT 4X1350CO EDGEWISE ELBOW	61
KTC1350LC4D	KT 5X1350CO EDGEWISE ELBOW	61
KTC1350LC4E	KT 4X1350CO EDGEWISE ELBOW	61
KTC1350LC5A	KT 5X1350CO EDGEWISE ELBOW	61
KTC1350LC5B	KT 5X1350CO EDGEWISE ELBOW	61
KTC1350LC5D	KT 5X1350CO EDGEWISE ELBOW	61
KTC1350LC5E	KT 5X1350CO EDGEWISE ELBOW	61
KTC1350LC7A	KT 5X1350CO EDGEWISE ELBOW	61
KTC1350LC7B	KT 5X1350CO EDGEWISE ELBOW	61
KTC1350LC7D	KT 5X1350CO EDGEWISE ELBOW	61
KTC1350LC7E	KT 5X1350CO EDGEWISE ELBOW	61
KTC1350LP3A1	KT 3X1350CO FLAT ELBOW N1	60
KTC1350LP3A2	KT 3X1350CO FLAT ELBOW N2	60
KTC1350LP3B1	KT 3X1350CO FLAT ELBOW N1	60
KTC1350LP3B2	KT 3X1350CO FLAT ELBOW N2	60
KTC1350LP3C1	KT 3X1350CO FLAT ELBOW N1	61
KTC1350LP3C2	KT 3X1350CO FLAT ELBOW N2	61
KTC1350LP3D1	KT 3X1350CO FLAT ELBOW N1	60
KTC1350LP3D2	KT 3X1350CO FLAT ELBOW N2	60
KTC1350LP3E1	KT 3X1350CO FLAT ELBOW N1	60
KTC1350LP3E2	KT 3X1350CO FLAT ELBOW N2	60
KTC1350LP4A1	KT 4X1350CO FLAT ELBOW N1	60
KTC1350LP4A2	KT 4X1350CO FLAT ELBOW N2	60
KTC1350LP4B1	KT 4X1350CO FLAT ELBOW N1	60
KTC1350LP4B2	KT 4X1350CO FLAT ELBOW N2	60
KTC1350LP4C1	KT 4X1350CO FLAT ELBOW N1	61
KTC1350LP4C2	KT 4X1350CO FLAT ELBOW N2	61
KTC1350LP4D1	KT 4X1350CO FLAT ELBOW N1	60
KTC1350LP4D2	KT 4X1350CO FLAT ELBOW N2	60
KTC1350LP4E1	KT 4X1350CO FLAT ELBOW N1	60
KTC1350LP4E2	KT 4X1350CO FLAT ELBOW N2	60
KTC1350LP5A1	KT 5X1350CO FLAT ELBOW N1	60
KTC1350LP5A2	KT 5X1350CO FLAT ELBOW N2	60
KTC1350LP5B1	KT 5X1350CO FLAT ELBOW N1	60
KTC1350LP5B2	KT 5X1350CO FLAT ELBOW N2	60
KTC1350LP5C1	KT 5X1350CO FLAT ELBOW N1	61
KTC1350LP5C2	KT 5X1350CO FLAT ELBOW N2	61
KTC1350LP5D1	KT 5X1350CO FLAT ELBOW N1	60
KTC1350LP5D2	KT 5X1350CO FLAT ELBOW N2	60
KTC1350LP5E1	KT 5X1350CO FLAT ELBOW N1	60
KTC1350LP5E2	KT 5X1350CO FLAT ELBOW N2	60
KTC1350LP7A1	KT 5X1350CO FLAT ELBOW N1	60
KTC1350LP7A2	KT 5X1350CO FLAT ELBOW N2	60
KTC1350LP7B1	KT 5X1350CO FLAT ELBOW N1	60
KTC1350LP7B2	KT 5X1350CO FLAT ELBOW N2	60
KTC1350LP7C1	KT 5X1350CO FLAT ELBOW N1	61
KTC1350LP7C2	KT 5X1350CO FLAT ELBOW N2	61
KTC1350LP7D1	KT 5X1350CO FLAT ELBOW N1	60
KTC1350LP7D2	KT 5X1350CO FLAT ELBOW N2	60
KTC1350LP7E1	KT 5X1350CO FLAT ELBOW N1	60
KTC1350LP7E2	KT 5X1350CO FLAT ELBOW N2	60
KTC1350PL31	KT 3X1350CO LINE PROTECTOR NS	127
KTC1350PL41	KT 4X1350CO LINE PROTECTOR NS	127

Index of catalogue numbers

Cat. no.	Designations	Pages
KTC1350PL51	KT 5X1350CO LINE PROTECTOR NS	127
KTC1350PL71	KT 5X1350CO LINE PROTECTOR NS	127
KTC1350SL31	KT 3X1350CO ISOLATOR UNIT NA	125
KTC1350SL41	KT 4X1350CO ISOLATOR UNIT NA	125
KTC1350SL51	KT 5X1350CO ISOLATOR UNIT NA	125
KTC1350SL71	KT 5X1350CO ISOLATOR UNIT NA	125
KTC1350TC3	KT 3X1350CO TEE ON EDGE	65
KTC1350TC4	KT 4X1350CO TEE ON EDGE	65
KTC1350TC5	KT 5X1350CO TEE ON EDGE	65
KTC1350TC7	KT 5X1350CO TEE ON EDGE	65
KTC1350TN410	KT 4X1350CO NEUTRAL PERMUTA	56
KTC1350TP410	KT 4X1350CO PHASES PERMUTA	56
KTC1350YA3	KT 3X1350CO JUNCTION BLOC	58
KTC1350YA4	KT 4X1350CO JUNCTION BLOC	58
KTC1350YA5	KT 5X1350CO JUNCTION BLOC	58
KTC1350YA7	KT 5X1350CO JUNCTION BLOC	58
KTC1350ZC31	KT 3X1350CO EDGEWISE ZED N1	66
KTC1350ZC32	KT 3X1350CO EDGEWISE ZED N2	66
KTC1350ZC41	KT 4X1350CO EDGEWISE ZED N1	66
KTC1350ZC42	KT 4X1350CO EDGEWISE ZED N2	66
KTC1350ZC51	KT 5X1350CO EDGEWISE ZED N1	66
KTC1350ZC52	KT 5X1350CO EDGEWISE ZED N2	66
KTC1350ZC71	KT 5X1350CO EDGEWISE ZED N1	66
KTC1350ZC72	KT 5X1350CO EDGEWISE ZED N2	66
KTC1350ZP3	KT 3X1350CO ZED ON FLAT	66
KTC1350ZP4	KT 4X1350CO ZED ON FLAT	66
KTC1350ZP5	KT 5X1350CO ZED ON FLAT	66
KTC1350ZP7	KT 5X1350CO ZED ON FLAT	66
KTC1600		
KTC1600CP31	KT 3X1600CO FLAT EDGEWISE N1	68
KTC1600CP32	KT 3X1600CO FLAT EDGEWISE N2	68
KTC1600CP33	KT 3X1600CO FLAT EDGEWISE N3	68
KTC1600CP34	KT 3X1600CO FLAT EDGEWISE N4	68
KTC1600CP41	KT 4X1600CO FLAT EDGEWISE N1	68
KTC1600CP42	KT 4X1600CO FLAT EDGEWISE N2	68
KTC1600CP43	KT 4X1600CO FLAT EDGEWISE N3	68
KTC1600CP44	KT 4X1600CO FLAT EDGEWISE N4	68
KTC1600CP51	KT 5X1600CO FLAT EDGEWISE N1	68
KTC1600CP52	KT 5X1600CO FLAT EDGEWISE N2	68
KTC1600CP53	KT 5X1600CO FLAT EDGEWISE N3	68
KTC1600CP54	KT 5X1600CO FLAT EDGEWISE N4	68
KTC1600CP71	KT 5X1600CO FLAT EDGEWISE N1	68
KTC1600CP72	KT 5X1600CO FLAT EDGEWISE N2	68
KTC1600CP73	KT 5X1600CO FLAT EDGEWISE N3	68
KTC1600CP74	KT 5X1600CO FLAT EDGEWISE N4	68
KTC1600DB310	KT 3X1600CO EXPANSION UNIT	56
KTC1600DB410	KT 4X1600CO EXPANSION UNIT	56
KTC1600DB510	KT 5X1600CO EXPANSION UNIT	56
KTC1600DB710	KT 5X1600CO EXPANSION UNIT	56
KTC1600EB320	KT 3X1600CO BOLT ON LENGTH 2M	52
KTC1600EB340	KT 3X1600CO BOLT ON LENGTH 4M	52
KTC1600EB420	KT 4X1600CO BOLT ON LENGTH 2M	52
KTC1600EB440	KT 4X1600CO BOLT ON LENGTH 4M	52
KTC1600EB520	KT 5X1600CO BOLT ON LENGTH 2M	52
KTC1600EB540	KT 5X1600CO BOLT ON LENGTH 4M	52
KTC1600EB720	KT 5X1600CO BOLT ON LENGTH 2M	52
KTC1600EB740	KT 5X1600CO BOLT ON LENGTH 4M	52
KTC1600ED3201	KT 1X1600CO PLUG-IN LENGTH 2M	50
KTC1600ED3203	KT 3X1600CO PLUG-IN LENGTH 2M	50
KTC1600ED3301	KT 1X1600CO PLUG-IN LENGTH	50
KTC1600ED3302	KT 2X1600CO PLUG-IN LENGTH	50
KTC1600ED3351	KT 1X1600CO PLUG-IN LENGTH	50
KTC1600ED3353	KT 3X1600CO PLUG-IN LENGTH	50
KTC1600ED3403	KT 3X1600CO PLUG-IN LENGTH 4M	50

Cat. no.	Designations	Pages
KTC1600ED4201	KT 1X1600CO PLUG-IN LENGTH 2M	50
KTC1600ED4203	KT 4X1600CO PLUG-IN LENGTH 2M	50
KTC1600ED4301	KT 1X1600CO PLUG-IN LENGTH	50
KTC1600ED4302	KT 2X1600CO PLUG-IN LENGTH	50
KTC1600ED4351	KT 1X1600CO PLUG-IN LENGTH	50
KTC1600ED4353	KT 3X1600CO PLUG-IN LENGTH	50
KTC1600ED4403	KT 4X1600CO PLUG-IN LENGTH 4M	50
KTC1600ED5201	KT 1X1600CO PLUG-IN LENGTH 2M	50
KTC1600ED5203	KT 5X1600CO PLUG-IN LENGTH 2M	50
KTC1600ED5301	KT 1X1600CO PLUG-IN LENGTH	50
KTC1600ED5302	KT 2X1600CO PLUG-IN LENGTH	50
KTC1600ED5351	KT 1X1600CO PLUG-IN LENGTH	50
KTC1600ED5353	KT 3X1600CO PLUG-IN LENGTH	50
KTC1600ED5403	KT 5X1600CO PLUG-IN LENGTH 4M	50
KTC1600ED7201	KT 1X1600CO PLUG-IN LENGTH 2M	50
KTC1600ED7203	KT 5X1600CO PLUG-IN LENGTH 2M	50
KTC1600ED7301	KT 1X1600CO PLUG-IN LENGTH	50
KTC1600ED7302	KT 2X1600CO PLUG-IN LENGTH	50
KTC1600ED7351	KT 1X1600CO PLUG-IN LENGTH	50
KTC1600ED7353	KT 3X1600CO PLUG-IN LENGTH	50
KTC1600ED7403	KT 5X1600CO PLUG-IN LENGTH 4M	50
KTC1600EH320	KT 3X1600CO KH PLUG-IN LENGTH 2M	53
KTC1600EH340	KT 3X1600CO KH PLUG-IN LENGTH 4M	53
KTC1600EH420	KT 4X1600CO KH PLUG-IN LENGTH 2M	53
KTC1600EH440	KT 4X1600CO KH PLUG-IN LENGTH 4M	53
KTC1600EH520	KT 5X1600CO KH PLUG-IN LENGTH 2M	53
KTC1600EH540	KT 5X1600CO KH PLUG-IN LENGTH 4M	53
KTC1600EH720	KT 5X1600CO KH PLUG-IN LENGTH 2M	53
KTC1600EH740	KT 5X1600CO KH PLUG-IN LENGTH 4M	53
KTC1600EL31	KT 3X1600CO FEED UNIT EL N1	92
KTC1600EL32	KT 3X1600CO FEED UNIT EL N2	92
KTC1600EL33	KT 3X1600CO FEED UNIT EL N3	94
KTC1600EL34	KT 3X1600CO FEED UNIT EL N4	94
KTC1600EL35	KT 3X1600CO FEED UNIT EL N5	95
KTC1600EL41	KT 4X1600CO FEED UNIT EL N1	92
KTC1600EL42	KT 4X1600CO FEED UNIT EL N2	92
KTC1600EL43	KT 4X1600CO FEED UNIT EL N3	94
KTC1600EL44	KT 4X1600CO FEED UNIT EL N4	94
KTC1600EL45	KT 4X1600CO FEED UNIT EL N5	95
KTC1600EL51	KT 5X1600CO FEED UNIT EL N1	92
KTC1600EL52	KT 5X1600CO FEED UNIT EL N2	92
KTC1600EL53	KT 5X1600CO FEED UNIT EL N3	94
KTC1600EL54	KT 5X1600CO FEED UNIT EL N4	94
KTC1600EL55	KT 5X1600CO FEED UNIT EL N5	95
KTC1600EL71	KT 5X1600CO FEED UNIT EL N1	92
KTC1600EL72	KT 5X1600CO FEED UNIT EL N2	92
KTC1600EL73	KT 5X1600CO FEED UNIT EL N3	94
KTC1600EL74	KT 5X1600CO FEED UNIT EL N4	94
KTC1600EL75	KT 5X1600CO FEED UNIT EL N5	95
KTC1600ER31	KT 3X1600CO FEED UNIT ER N1	79
KTC1600ER32	KT 3X1600CO FEED UNIT ER N2	79
KTC1600ER33	KT 3X1600CO FEED UNIT ER N3	80
KTC1600ER34	KT 3X1600CO FEED UNIT ER N4	80
KTC1600ER35	KT 3X1600CO FEED UNIT ER N5	81
KTC1600ER36	KT 3X1600CO FEED UNIT ER N6	81
KTC1600ER37	KT 3X1600CO FEED UNIT ER N7	85
KTC1600ER41	KT 4X1600CO FEED UNIT ER N1	79
KTC1600ER42	KT 4X1600CO FEED UNIT ER N2	79
KTC1600ER43	KT 4X1600CO FEED UNIT ER N3	80
KTC1600ER44	KT 4X1600CO FEED UNIT ER N4	80
KTC1600ER45	KT 4X1600CO FEED UNIT ER N5	81
KTC1600ER46	KT 4X1600CO FEED UNIT ER N6	81
KTC1600ER47	KT 4X1600CO FEED UNIT ER N7	85
KTC1600ER51	KT 5X1600CO FEED UNIT ER N1	79
KTC1600ER52	KT 5X1600CO FEED UNIT ER N2	79

Index of catalogue numbers

Cat. no.	Designations	Pages
KTC1600ER53	KT 5X1600CO FEED UNIT ER N3	80
KTC1600ER54	KT 5X1600CO FEED UNIT ER N4	80
KTC1600ER55	KT 5X1600CO FEED UNIT ER N5	81
KTC1600ER56	KT 5X1600CO FEED UNIT ER N6	81
KTC1600ER57	KT 5X1600CO FEED UNIT ER N7	85
KTC1600ER71	KT 5X1600CO FEED UNIT ER N1	79
KTC1600ER72	KT 5X1600CO FEED UNIT ER N2	79
KTC1600ER73	KT 5X1600CO FEED UNIT ER N3	80
KTC1600ER74	KT 5X1600CO FEED UNIT ER N4	80
KTC1600ER75	KT 5X1600CO FEED UNIT ER N5	81
KTC1600ER76	KT 5X1600CO FEED UNIT ER N6	81
KTC1600ER77	KT 5X1600CO FEED UNIT ER N7	85
KTC1600ET31A	KT 3X1600CO FEEDER LENGTH	50
KTC1600ET320	KT 3X1600CO FEEDER LENGTH 2M	50
KTC1600ET32B	KT 3X1600CO FEEDER LENGTH	50
KTC1600ET32C	KT 3X1600CO FEEDER LENGTH	50
KTC1600ET33D	KT 3X1600CO FEEDER LENGTH	50
KTC1600ET33E	KT 3X1600CO FEEDER LENGTH	50
KTC1600ET33F	KT 3X1600CO FEEDER LENGTH	50
KTC1600ET340	KT 3X1600CO FEEDER LENGTH 4M	50
KTC1600ET41A	KT 4X1600CO FEEDER LENGTH	50
KTC1600ET420	KT 4X1600CO FEEDER LENGTH 2M	50
KTC1600ET42B	KT 4X1600CO FEEDER LENGTH	50
KTC1600ET42C	KT 4X1600CO FEEDER LENGTH	50
KTC1600ET43D	KT 4X1600CO FEEDER LENGTH	50
KTC1600ET43E	KT 4X1600CO FEEDER LENGTH	50
KTC1600ET43F	KT 4X1600CO FEEDER LENGTH	50
KTC1600ET440	KT 4X1600CO FEEDER LENGTH 4M	50
KTC1600ET51A	KT 5X1600CO FEEDER LENGTH	50
KTC1600ET520	KT 5X1600CO FEEDER LENGTH 2M	50
KTC1600ET52B	KT 5X1600CO FEEDER LENGTH	50
KTC1600ET52C	KT 5X1600CO FEEDER LENGTH	50
KTC1600ET53D	KT 5X1600CO FEEDER LENGTH	50
KTC1600ET53E	KT 5X1600CO FEEDER LENGTH	50
KTC1600ET53F	KT 5X1600CO FEEDER LENGTH	50
KTC1600ET540	KT 5X1600CO FEEDER LENGTH 4M	50
KTC1600ET71A	KT 5X1600CO FEEDER LENGTH	50
KTC1600ET720	KT 5X1600CO FEEDER LENGTH 2M	50
KTC1600ET72B	KT 5X1600CO FEEDER LENGTH	50
KTC1600ET72C	KT 5X1600CO FEEDER LENGTH	50
KTC1600ET73D	KT 5X1600CO FEEDER LENGTH	50
KTC1600ET73E	KT 5X1600CO FEEDER LENGTH	50
KTC1600ET73F	KT 5X1600CO FEEDER LENGTH	50
KTC1600ET740	KT 5X1600CO FEEDER LENGTH 4M	50
KTC1600FC3A	KT 3X1600CO EDGEWISE ELBOW	73
KTC1600FC3B	KT 3X1600CO EDGEWISE ELBOW	73
KTC1600FC3D	KT 3X1600CO EDGEWISE ELBOW	73
KTC1600FC3E	KT 3X1600CO EDGEWISE ELBOW	73
KTC1600FC4A	KT 4X1600CO EDGEWISE ELBOW	73
KTC1600FC4B	KT 4X1600CO EDGEWISE ELBOW	73
KTC1600FC4D	KT 4X1600CO EDGEWISE ELBOW	73
KTC1600FC4E	KT 4X1600CO EDGEWISE ELBOW	73
KTC1600FC5A	KT 5X1600CO EDGEWISE ELBOW	73
KTC1600FC5B	KT 5X1600CO EDGEWISE ELBOW	73
KTC1600FC5D	KT 5X1600CO EDGEWISE ELBOW	73
KTC1600FC5E	KT 5X1600CO EDGEWISE ELBOW	73
KTC1600FC7A	KT 5X1600CO EDGEWISE ELBOW	73
KTC1600FC7B	KT 5X1600CO EDGEWISE ELBOW	73
KTC1600FC7D	KT 5X1600CO EDGEWISE ELBOW	73
KTC1600FC7E	KT 5X1600CO EDGEWISE ELBOW	73
KTC1600FJ3	KT 3X1600AL JUNCTION BLOC FIRE RATED	71
KTC1600FJ4	KT 4X1600AL JUNCTION BLOC FIRE RATED	71
KTC1600FJ5	KT 5X1600AL JUNCTION BLOC FIRE RATED	71
KTC1600FJ7	KT 5X1600AL JUNCTION BLOC FIRE RATED	71
KTC1600FP3A1	KT 3X1600CO FLAT ELBOW N1 FIRE	72
KTC1600FP3A2	KT 3X1600CO FLAT ELBOW N2 FIRE	72
KTC1600FP3B1	KT 3X1600CO FLAT ELBOW N1 FIRE	72
KTC1600FP3B2	KT 3X1600CO FLAT ELBOW N2 FIRE	72
KTC1600FP3D1	KT 3X1600CO FLAT ELBOW N1 FIRE	72
KTC1600FP3D2	KT 3X1600CO FLAT ELBOW N2 FIRE	72
KTC1600FP3E1	KT 3X1600CO FLAT ELBOW N1 FIRE	72
KTC1600FP3E2	KT 3X1600CO FLAT ELBOW N2 FIRE	72
KTC1600FP4A1	KT 4X1600CO FLAT ELBOW N1 FIRE	72
KTC1600FP4A2	KT 4X1600CO FLAT ELBOW N2 FIRE	72
KTC1600FP4B1	KT 4X1600CO FLAT ELBOW N1 FIRE	72
KTC1600FP4B2	KT 4X1600CO FLAT ELBOW N2 FIRE	72
KTC1600FP4D1	KT 4X1600CO FLAT ELBOW N1 FIRE	72
KTC1600FP4D2	KT 4X1600CO FLAT ELBOW N2 FIRE	72
KTC1600FP4E1	KT 4X1600CO FLAT ELBOW N1 FIRE	72
KTC1600FP4E2	KT 4X1600CO FLAT ELBOW N2 FIRE	72
KTC1600FP5A1	KT 5X1600CO FLAT ELBOW N1 FIRE	72
KTC1600FP5A2	KT 5X1600CO FLAT ELBOW N2 FIRE	72
KTC1600FP5B1	KT 5X1600CO FLAT ELBOW N1 FIRE	72
KTC1600FP5B2	KT 5X1600CO FLAT ELBOW N2 FIRE	72
KTC1600FP5D1	KT 5X1600CO FLAT ELBOW N1 FIRE	72
KTC1600FP5D2	KT 5X1600CO FLAT ELBOW N2 FIRE	72
KTC1600FP5E1	KT 5X1600CO FLAT ELBOW N1 FIRE	72
KTC1600FP5E2	KT 5X1600CO FLAT ELBOW N2 FIRE	72
KTC1600FP7A1	KT 5X1600CO FLAT ELBOW N1 FIRE	72
KTC1600FP7A2	KT 5X1600CO FLAT ELBOW N2 FIRE	72
KTC1600FP7B1	KT 5X1600CO FLAT ELBOW N1 FIRE	72
KTC1600FP7B2	KT 5X1600CO FLAT ELBOW N2 FIRE	72
KTC1600FP7D1	KT 5X1600CO FLAT ELBOW N1 FIRE	72
KTC1600FP7D2	KT 5X1600CO FLAT ELBOW N2 FIRE	72
KTC1600FP7E1	KT 5X1600CO FLAT ELBOW N1 FIRE	72
KTC1600FP7E2	KT 5X1600CO FLAT ELBOW N2 FIRE	72
KTC1600FT31A	KT 3X1600CO FEEDER LENGTH FIRE	70
KTC1600FT320	KT 3X1600CO FEEDER LENGTH FIRE 2M	70
KTC1600FT32B	KT 3X1600CO FEEDER LENGTH FIRE	70
KTC1600FT32C	KT 3X1600CO FEEDER LENGTH FIRE	70
KTC1600FT33D	KT 3X1600CO FEEDER LENGTH FIRE	70
KTC1600FT33E	KT 3X1600CO FEEDER LENGTH FIRE	70
KTC1600FT33F	KT 3X1600CO FEEDER LENGTH FIRE	70
KTC1600FT340	KT 3X1600CO FEEDER LENGTH FIRE 4M	70
KTC1600FT41A	KT 4X1600CO FEEDER LENGTH FIRE	70
KTC1600FT420	KT 4X1600CO FEEDER LENGTH FIRE 2M	70
KTC1600FT42B	KT 4X1600CO FEEDER LENGTH FIRE	70
KTC1600FT42C	KT 4X1600CO FEEDER LENGTH FIRE	70
KTC1600FT43D	KT 4X1600CO FEEDER LENGTH FIRE	70
KTC1600FT43E	KT 4X1600CO FEEDER LENGTH FIRE	70
KTC1600FT43F	KT 4X1600CO FEEDER LENGTH FIRE	70
KTC1600FT440	KT 4X1600CO FEEDER LENGTH FIRE 4M	70
KTC1600FT51A	KT 5X1600CO FEEDER LENGTH FIRE	70
KTC1600FT520	KT 5X1600CO FEEDER LENGTH FIRE 2M	70
KTC1600FT52B	KT 5X1600CO FEEDER LENGTH FIRE	70
KTC1600FT52C	KT 5X1600CO FEEDER LENGTH FIRE	70
KTC1600FT53D	KT 5X1600CO FEEDER LENGTH FIRE	70
KTC1600FT53E	KT 5X1600CO FEEDER LENGTH FIRE	70
KTC1600FT53F	KT 5X1600CO FEEDER LENGTH FIRE	70
KTC1600FT540	KT 5X1600CO FEEDER LENGTH FIRE 4M	70
KTC1600FT71A	KT 5X1600CO FEEDER LENGTH FIRE	70
KTC1600FT720	KT 5X1600CO FEEDER LENGTH FIRE 2M	70
KTC1600FT72B	KT 5X1600CO FEEDER LENGTH FIRE	70
KTC1600FT72C	KT 5X1600CO FEEDER LENGTH FIRE	70
KTC1600FT73D	KT 5X1600CO FEEDER LENGTH FIRE	70
KTC1600FT73E	KT 5X1600CO FEEDER LENGTH FIRE	70
KTC1600FT73F	KT 5X1600CO FEEDER LENGTH FIRE	70
KTC1600FT740	KT 5X1600CO FEEDER LENGTH FIRE 4M	70
KTC1600LC3A	KT 3X1600CO EDGEWISE ELBOW	61
KTC1600LC3B	KT 3X1600CO EDGEWISE ELBOW	61

Index of catalogue numbers

Cat. no.	Designations	Pages
KTC1600LC3D	KT 3X1600CO EDGEWISE ELBOW	61
KTC1600LC3E	KT 3X1600CO EDGEWISE ELBOW	61
KTC1600LC4A	KT 4X1600CO EDGEWISE ELBOW	61
KTC1600LC4B	KT 4X1600CO EDGEWISE ELBOW	61
KTC1600LC4D	KT 4X1600CO EDGEWISE ELBOW	61
KTC1600LC4E	KT 4X1600CO EDGEWISE ELBOW	61
KTC1600LC5A	KT 5X1600CO EDGEWISE ELBOW	61
KTC1600LC5B	KT 5X1600CO EDGEWISE ELBOW	61
KTC1600LC5D	KT 5X1600CO EDGEWISE ELBOW	61
KTC1600LC5E	KT 5X1600CO EDGEWISE ELBOW	61
KTC1600LC7A	KT 5X1600CO EDGEWISE ELBOW	61
KTC1600LC7B	KT 5X1600CO EDGEWISE ELBOW	61
KTC1600LC7D	KT 5X1600CO EDGEWISE ELBOW	61
KTC1600LC7E	KT 5X1600CO EDGEWISE ELBOW	61
KTC1600LP3A1	KT 3X1600CO FLAT ELBOW N1	60
KTC1600LP3A2	KT 3X1600CO FLAT ELBOW N2	60
KTC1600LP3B1	KT 3X1600CO FLAT ELBOW N1	60
KTC1600LP3B2	KT 3X1600CO FLAT ELBOW N2	60
KTC1600LP3C1	KT 3X1600CO FLAT ELBOW N1	61
KTC1600LP3C2	KT 3X1600CO FLAT ELBOW N2	61
KTC1600LP3D1	KT 3X1600CO FLAT ELBOW N1	60
KTC1600LP3D2	KT 3X1600CO FLAT ELBOW N2	60
KTC1600LP3E1	KT 3X1600CO FLAT ELBOW N1	60
KTC1600LP3E2	KT 3X1600CO FLAT ELBOW N2	60
KTC1600LP4A1	KT 4X1600CO FLAT ELBOW N1	60
KTC1600LP4A2	KT 4X1600CO FLAT ELBOW N2	60
KTC1600LP4B1	KT 4X1600CO FLAT ELBOW N1	60
KTC1600LP4B2	KT 4X1600CO FLAT ELBOW N2	60
KTC1600LP4C1	KT 4X1600CO FLAT ELBOW N1	61
KTC1600LP4C2	KT 4X1600CO FLAT ELBOW N2	61
KTC1600LP4D1	KT 4X1600CO FLAT ELBOW N1	60
KTC1600LP4D2	KT 4X1600CO FLAT ELBOW N2	60
KTC1600LP4E1	KT 4X1600CO FLAT ELBOW N1	60
KTC1600LP4E2	KT 4X1600CO FLAT ELBOW N2	60
KTC1600LP5A1	KT 5X1600CO FLAT ELBOW N1	60
KTC1600LP5A2	KT 5X1600CO FLAT ELBOW N2	60
KTC1600LP5B1	KT 5X1600CO FLAT ELBOW N1	60
KTC1600LP5B2	KT 5X1600CO FLAT ELBOW N2	60
KTC1600LP5C1	KT 5X1600CO FLAT ELBOW N1	61
KTC1600LP5C2	KT 5X1600CO FLAT ELBOW N2	61
KTC1600LP5D1	KT 5X1600CO FLAT ELBOW N1	60
KTC1600LP5D2	KT 5X1600CO FLAT ELBOW N2	60
KTC1600LP5E1	KT 5X1600CO FLAT ELBOW N1	60
KTC1600LP5E2	KT 5X1600CO FLAT ELBOW N2	60
KTC1600LP7A1	KT 5X1600CO FLAT ELBOW N1	60
KTC1600LP7A2	KT 5X1600CO FLAT ELBOW N2	60
KTC1600LP7B1	KT 5X1600CO FLAT ELBOW N1	60
KTC1600LP7B2	KT 5X1600CO FLAT ELBOW N2	60
KTC1600LP7C1	KT 5X1600CO FLAT ELBOW N1	61
KTC1600LP7C2	KT 5X1600CO FLAT ELBOW N2	61
KTC1600LP7D1	KT 5X1600CO FLAT ELBOW N1	60
KTC1600LP7D2	KT 5X1600CO FLAT ELBOW N2	60
KTC1600LP7E1	KT 5X1600CO FLAT ELBOW N1	60
KTC1600LP7E2	KT 5X1600CO FLAT ELBOW N2	60
KTC1600PL31	KT 3X1600CO LINE PROTECTOR NS	127
KTC1600PL41	KT 4X1600CO LINE PROTECTOR NS	127
KTC1600PL51	KT 5X1600CO LINE PROTECTOR NS	127
KTC1600PL71	KT 5X1600CO LINE PROTECTOR NS	127
KTC1600SL31	KT 3X1600CO ISOLATOR UNIT NA	125
KTC1600SL41	KT 4X1600CO ISOLATOR UNIT NA	125
KTC1600SL51	KT 5X1600CO ISOLATOR UNIT NA	125
KTC1600SL71	KT 5X1600CO ISOLATOR UNIT NA	125
KTC1600TC3	KT 3X1600CO TEE ON EDGE	65
KTC1600TC4	KT 4X1600CO TEE ON EDGE	65
KTC1600TC5	KT 5X1600CO TEE ON EDGE	65

Cat. no.	Designations	Pages
KTC1600TC7	KT 5X1600CO TEE ON EDGE	65
KTC1600TN410	KT 4X1600CO NEUTRAL PERMUTA	56
KTC1600TP410	KT 4X1600CO PHASES PERMUTA	56
KTC1600YA3	KT 3X1600CO JUNCTION BLOC	58
KTC1600YA4	KT 4X1600CO JUNCTION BLOC	58
KTC1600YA5	KT 5X1600CO JUNCTION BLOC	58
KTC1600YA7	KT 5X1600CO JUNCTION BLOC	58
KTC1600ZC31	KT 3X1600CO EDGEWISE ZED N1	66
KTC1600ZC32	KT 3X1600CO EDGEWISE ZED N2	66
KTC1600ZC41	KT 4X1600CO EDGEWISE ZED N1	66
KTC1600ZC42	KT 4X1600CO EDGEWISE ZED N2	66
KTC1600ZC51	KT 5X1600CO EDGEWISE ZED N1	66
KTC1600ZC52	KT 5X1600CO EDGEWISE ZED N2	66
KTC1600ZC71	KT 5X1600CO EDGEWISE ZED N1	66
KTC1600ZC72	KT 5X1600CO EDGEWISE ZED N2	66
KTC1600ZP3	KT 3X1600CO ZED ON FLAT	66
KTC1600ZP4	KT 4X1600CO ZED ON FLAT	66
KTC1600ZP5	KT 5X1600CO ZED ON FLAT	66
KTC1600ZP7	KT 5X1600CO ZED ON FLAT	66
KTC2000		
KTC2000CP31	KT 3X2000CO FLAT EDGEWISE N1	68
KTC2000CP32	KT 3X2000CO FLAT EDGEWISE N2	68
KTC2000CP33	KT 3X2000CO FLAT EDGEWISE N3	68
KTC2000CP34	KT 3X2000CO FLAT EDGEWISE N4	68
KTC2000CP41	KT 4X2000CO FLAT EDGEWISE N1	68
KTC2000CP42	KT 4X2000CO FLAT EDGEWISE N2	68
KTC2000CP43	KT 4X2000CO FLAT EDGEWISE N3	68
KTC2000CP44	KT 4X2000CO FLAT EDGEWISE N4	68
KTC2000CP51	KT 5X2000CO FLAT EDGEWISE N1	68
KTC2000CP52	KT 5X2000CO FLAT EDGEWISE N2	68
KTC2000CP53	KT 5X2000CO FLAT EDGEWISE N3	68
KTC2000CP54	KT 5X2000CO FLAT EDGEWISE N4	68
KTC2000CP71	KT 5X2000CO FLAT EDGEWISE N1	68
KTC2000CP72	KT 5X2000CO FLAT EDGEWISE N2	68
KTC2000CP73	KT 5X2000CO FLAT EDGEWISE N3	68
KTC2000CP74	KT 5X2000CO FLAT EDGEWISE N4	68
KTC2000DB310	KT 3X2000CO EXPANSION UNIT	56
KTC2000DB410	KT 4X2000CO EXPANSION UNIT	56
KTC2000DB510	KT 5X2000CO EXPANSION UNIT	56
KTC2000DB710	KT 5X2000CO EXPANSION UNIT	56
KTC2000EB320	KT 3X2000CO BOLT ON LENGTH 2M	52
KTC2000EB340	KT 3X2000CO BOLT ON LENGTH 4M	52
KTC2000EB420	KT 4X2000CO BOLT ON LENGTH 2M	52
KTC2000EB440	KT 4X2000CO BOLT ON LENGTH 4M	52
KTC2000EB520	KT 5X2000CO BOLT ON LENGTH 2M	52
KTC2000EB540	KT 5X2000CO BOLT ON LENGTH 4M	52
KTC2000EB720	KT 5X2000CO BOLT ON LENGTH 2M	52
KTC2000EB740	KT 5X2000CO BOLT ON LENGTH 4M	52
KTC2000ED3201	KT 1X2000CO PLUG-IN LENGTH 2M	50
KTC2000ED3203	KT 3X2000CO PLUG-IN LENGTH 2M	50
KTC2000ED3301	KT 1X2000CO PLUG-IN LENGTH	50
KTC2000ED3302	KT 2X2000CO PLUG-IN LENGTH	50
KTC2000ED3351	KT 1X2000CO PLUG-IN LENGTH	50
KTC2000ED3353	KT 3X2000CO PLUG-IN LENGTH	50
KTC2000ED3403	KT 3X2000CO PLUG-IN LENGTH 4M	50
KTC2000ED4201	KT 1X2000CO PLUG-IN LENGTH 2M	50
KTC2000ED4203	KT 4X2000CO PLUG-IN LENGTH 2M	50
KTC2000ED4301	KT 1X2000CO PLUG-IN LENGTH	50
KTC2000ED4302	KT 2X2000CO PLUG-IN LENGTH	50
KTC2000ED4351	KT 1X2000CO PLUG-IN LENGTH	50
KTC2000ED4353	KT 3X2000CO PLUG-IN LENGTH	50
KTC2000ED4403	KT 4X2000CO PLUG-IN LENGTH 4M	50
KTC2000ED5201	KT 1X2000CO PLUG-IN LENGTH 2M	50
KTC2000ED5203	KT 5X2000CO PLUG-IN LENGTH 2M	50

Index of catalogue numbers

Cat. no.	Designations	Pages
KTC2000ED5301	KT 1X2000CO PLUG-IN LENGTH	50
KTC2000ED5302	KT 2X2000CO PLUG-IN LENGTH	50
KTC2000ED5351	KT 1X2000CO PLUG-IN LENGTH	50
KTC2000ED5353	KT 3X2000CO PLUG-IN LENGTH	50
KTC2000ED5403	KT 5X2000CO PLUG-IN LENGTH 4M	50
KTC2000ED7201	KT 1X2000CO PLUG-IN LENGTH 2M	50
KTC2000ED7203	KT 5X2000CO PLUG-IN LENGTH 2M	50
KTC2000ED7301	KT 1X2000CO PLUG-IN LENGTH	50
KTC2000ED7302	KT 2X2000CO PLUG-IN LENGTH	50
KTC2000ED7351	KT 1X2000CO PLUG-IN LENGTH	50
KTC2000ED7353	KT 3X2000CO PLUG-IN LENGTH	50
KTC2000ED7403	KT 5X2000CO PLUG-IN LENGTH 4M	50
KTC2000EH320	KT 3X2000CO KH PLUG-IN LENGTH 2M	53
KTC2000EH340	KT 3X2000CO KH PLUG-IN LENGTH 4M	53
KTC2000EH420	KT 4X2000CO KH PLUG-IN LENGTH 2M	53
KTC2000EH440	KT 4X2000CO KH PLUG-IN LENGTH 4M	53
KTC2000EH520	KT 5X2000CO KH PLUG-IN LENGTH 2M	53
KTC2000EH540	KT 5X2000CO KH PLUG-IN LENGTH 4M	53
KTC2000EH720	KT 5X2000CO KH PLUG-IN LENGTH 2M	53
KTC2000EH740	KT 5X2000CO KH PLUG-IN LENGTH 4M	53
KTC2000EL31	KT 3X2000CO FEED UNIT EL N1	92
KTC2000EL32	KT 3X2000CO FEED UNIT EL N2	92
KTC2000EL33	KT 3X2000CO FEED UNIT EL N3	94
KTC2000EL34	KT 3X2000CO FEED UNIT EL N4	94
KTC2000EL35	KT 3X2000CO FEED UNIT EL N5	95
KTC2000EL41	KT 4X2000CO FEED UNIT EL N1	92
KTC2000EL42	KT 4X2000CO FEED UNIT EL N2	92
KTC2000EL43	KT 4X2000CO FEED UNIT EL N3	94
KTC2000EL44	KT 4X2000CO FEED UNIT EL N4	94
KTC2000EL45	KT 4X2000CO FEED UNIT EL N5	95
KTC2000EL51	KT 5X2000CO FEED UNIT EL N1	92
KTC2000EL52	KT 5X2000CO FEED UNIT EL N2	92
KTC2000EL53	KT 5X2000CO FEED UNIT EL N3	94
KTC2000EL54	KT 5X2000CO FEED UNIT EL N4	94
KTC2000EL55	KT 5X2000CO FEED UNIT EL N5	95
KTC2000EL71	KT 5X2000CO FEED UNIT EL N1	92
KTC2000EL72	KT 5X2000CO FEED UNIT EL N2	92
KTC2000EL73	KT 5X2000CO FEED UNIT EL N3	94
KTC2000EL74	KT 5X2000CO FEED UNIT EL N4	94
KTC2000EL75	KT 5X2000CO FEED UNIT EL N5	95
KTC2000ER31	KT 3X2000CO FEED UNIT ER N1	79
KTC2000ER32	KT 3X2000CO FEED UNIT ER N2	79
KTC2000ER33	KT 3X2000CO FEED UNIT ER N3	80
KTC2000ER34	KT 3X2000CO FEED UNIT ER N4	80
KTC2000ER35	KT 3X2000CO FEED UNIT ER N5	81
KTC2000ER36	KT 3X2000CO FEED UNIT ER N6	81
KTC2000ER37	KT 3X2000CO FEED UNIT ER N7	85
KTC2000ER41	KT 4X2000CO FEED UNIT ER N1	79
KTC2000ER42	KT 4X2000CO FEED UNIT ER N2	79
KTC2000ER43	KT 4X2000CO FEED UNIT ER N3	80
KTC2000ER44	KT 4X2000CO FEED UNIT ER N4	80
KTC2000ER45	KT 4X2000CO FEED UNIT ER N5	81
KTC2000ER46	KT 4X2000CO FEED UNIT ER N6	81
KTC2000ER47	KT 4X2000CO FEED UNIT ER N7	85
KTC2000ER51	KT 5X2000CO FEED UNIT ER N1	79
KTC2000ER52	KT 5X2000CO FEED UNIT ER N2	79
KTC2000ER53	KT 5X2000CO FEED UNIT ER N3	80
KTC2000ER54	KT 5X2000CO FEED UNIT ER N4	80
KTC2000ER55	KT 5X2000CO FEED UNIT ER N5	81
KTC2000ER56	KT 5X2000CO FEED UNIT ER N6	81
KTC2000ER57	KT 5X2000CO FEED UNIT ER N7	85
KTC2000ER71	KT 5X2000CO FEED UNIT ER N1	79
KTC2000ER72	KT 5X2000CO FEED UNIT ER N2	79
KTC2000ER73	KT 5X2000CO FEED UNIT ER N3	80
KTC2000ER74	KT 5X2000CO FEED UNIT ER N4	80

Cat. no.	Designations	Pages
KTC2000ER75	KT 5X2000CO FEED UNIT ER N5	81
KTC2000ER76	KT 5X2000CO FEED UNIT ER N6	81
KTC2000ER77	KT 5X2000CO FEED UNIT ER N7	85
KTC2000ET31A	KT 3X2000CO FEEDER LENGTH	50
KTC2000ET320	KT 3X2000CO FEEDER LENGTH 2M	50
KTC2000ET32B	KT 3X2000CO FEEDER LENGTH	50
KTC2000ET32C	KT 3X2000CO FEEDER LENGTH	50
KTC2000ET33D	KT 3X2000CO FEEDER LENGTH	50
KTC2000ET33E	KT 3X2000CO FEEDER LENGTH	50
KTC2000ET33F	KT 3X2000CO FEEDER LENGTH	50
KTC2000ET340	KT 3X2000CO FEEDER LENGTH 4M	50
KTC2000ET41A	KT 4X2000CO FEEDER LENGTH	50
KTC2000ET420	KT 4X2000CO FEEDER LENGTH 2M	50
KTC2000ET42B	KT 4X2000CO FEEDER LENGTH	50
KTC2000ET42C	KT 4X2000CO FEEDER LENGTH	50
KTC2000ET43D	KT 4X2000CO FEEDER LENGTH	50
KTC2000ET43E	KT 4X2000CO FEEDER LENGTH	50
KTC2000ET43F	KT 4X2000CO FEEDER LENGTH	50
KTC2000ET440	KT 4X2000CO FEEDER LENGTH 4M	50
KTC2000ET51A	KT 5X2000CO FEEDER LENGTH	50
KTC2000ET520	KT 5X2000CO FEEDER LENGTH 2M	50
KTC2000ET52B	KT 5X2000CO FEEDER LENGTH	50
KTC2000ET52C	KT 5X2000CO FEEDER LENGTH	50
KTC2000ET53D	KT 5X2000CO FEEDER LENGTH	50
KTC2000ET53E	KT 5X2000CO FEEDER LENGTH	50
KTC2000ET53F	KT 5X2000CO FEEDER LENGTH	50
KTC2000ET540	KT 5X2000CO FEEDER LENGTH 4M	50
KTC2000ET71A	KT 5X2000CO FEEDER LENGTH	50
KTC2000ET720	KT 5X2000CO FEEDER LENGTH 2M	50
KTC2000ET72B	KT 5X2000CO FEEDER LENGTH	50
KTC2000ET72C	KT 5X2000CO FEEDER LENGTH	50
KTC2000ET73D	KT 5X2000CO FEEDER LENGTH	50
KTC2000ET73E	KT 5X2000CO FEEDER LENGTH	50
KTC2000ET73F	KT 5X2000CO FEEDER LENGTH	50
KTC2000ET740	KT 5X2000CO FEEDER LENGTH 4M	50
KTC2000FC3A	KT 3X2000CO EDGEWISE ELBOW	73
KTC2000FC3B	KT 3X2000CO EDGEWISE ELBOW	73
KTC2000FC3D	KT 3X2000CO EDGEWISE ELBOW	73
KTC2000FC3E	KT 3X2000CO EDGEWISE ELBOW	73
KTC2000FC4A	KT 4X2000CO EDGEWISE ELBOW	73
KTC2000FC4B	KT 4X2000CO EDGEWISE ELBOW	73
KTC2000FC4D	KT 4X2000CO EDGEWISE ELBOW	73
KTC2000FC4E	KT 4X2000CO EDGEWISE ELBOW	73
KTC2000FC5A	KT 5X2000CO EDGEWISE ELBOW	73
KTC2000FC5B	KT 5X2000CO EDGEWISE ELBOW	73
KTC2000FC5D	KT 5X2000CO EDGEWISE ELBOW	73
KTC2000FC5E	KT 5X2000CO EDGEWISE ELBOW	73
KTC2000FC7A	KT 5X2000CO EDGEWISE ELBOW	73
KTC2000FC7B	KT 5X2000CO EDGEWISE ELBOW	73
KTC2000FC7D	KT 5X2000CO EDGEWISE ELBOW	73
KTC2000FC7E	KT 5X2000CO EDGEWISE ELBOW	73
KTC2000FJ3	KT 3X2000CU JUNCTION BLOC FIRE RATED	71
KTC2000FJ4	KT 4X2000CU JUNCTION BLOC FIRE RATED	71
KTC2000FJ5	KT 5X2000CU JUNCTION BLOC FIRE RATED	71
KTC2000FJ7	KT 5X2000CU JUNCTION BLOC FIRE RATED	71
KTC2000FP3A1	KT 3X2000CO FLAT ELBOW N1 FIRE	72
KTC2000FP3A2	KT 3X2000CO FLAT ELBOW N2 FIRE	72
KTC2000FP3B1	KT 3X2000CO FLAT ELBOW N1 FIRE	72
KTC2000FP3B2	KT 3X2000CO FLAT ELBOW N2 FIRE	72
KTC2000FP3D1	KT 3X2000CO FLAT ELBOW N1 FIRE	72
KTC2000FP3D2	KT 3X2000CO FLAT ELBOW N2 FIRE	72
KTC2000FP3E1	KT 3X2000CO FLAT ELBOW N1 FIRE	72
KTC2000FP3E2	KT 3X2000CO FLAT ELBOW N2 FIRE	72
KTC2000FP4A1	KT 4X2000CO FLAT ELBOW N1 FIRE	72
KTC2000FP4A2	KT 4X2000CO FLAT ELBOW N2 FIRE	72

Index of catalogue numbers

Cat. no.	Designations	Pages
KTC2000FP4B1	KT 4X2000CO FLAT ELBOW N1 FIRE	72
KTC2000FP4B2	KT 4X2000CO FLAT ELBOW N2 FIRE	72
KTC2000FP4D1	KT 4X2000CO FLAT ELBOW N1 FIRE	72
KTC2000FP4D2	KT 4X2000CO FLAT ELBOW N2 FIRE	72
KTC2000FP4E1	KT 4X2000CO FLAT ELBOW N1 FIRE	72
KTC2000FP4E2	KT 4X2000CO FLAT ELBOW N2 FIRE	72
KTC2000FP5A1	KT 5X2000CO FLAT ELBOW N1 FIRE	72
KTC2000FP5A2	KT 5X2000CO FLAT ELBOW N2 FIRE	72
KTC2000FP5B1	KT 5X2000CO FLAT ELBOW N1 FIRE	72
KTC2000FP5B2	KT 5X2000CO FLAT ELBOW N2 FIRE	72
KTC2000FP5D1	KT 5X2000CO FLAT ELBOW N1 FIRE	72
KTC2000FP5D2	KT 5X2000CO FLAT ELBOW N2 FIRE	72
KTC2000FP5E1	KT 5X2000CO FLAT ELBOW N1 FIRE	72
KTC2000FP5E2	KT 5X2000CO FLAT ELBOW N2 FIRE	72
KTC2000FP7A1	KT 5X2000CO FLAT ELBOW N1 FIRE	72
KTC2000FP7A2	KT 5X2000CO FLAT ELBOW N2 FIRE	72
KTC2000FP7B1	KT 5X2000CO FLAT ELBOW N1 FIRE	72
KTC2000FP7B2	KT 5X2000CO FLAT ELBOW N2 FIRE	72
KTC2000FP7D1	KT 5X2000CO FLAT ELBOW N1 FIRE	72
KTC2000FP7D2	KT 5X2000CO FLAT ELBOW N2 FIRE	72
KTC2000FP7E1	KT 5X2000CO FLAT ELBOW N1 FIRE	72
KTC2000FP7E2	KT 5X2000CO FLAT ELBOW N2 FIRE	72
KTC2000FT31A	KT 3X2000CO FEEDER LENGTH FIRE	70
KTC2000FT320	KT 3X2000CO FEEDER LENGTH FIRE 2M	70
KTC2000FT32B	KT 3X2000CO FEEDER LENGTH FIRE	70
KTC2000FT32C	KT 3X2000CO FEEDER LENGTH FIRE	70
KTC2000FT33D	KT 3X2000CO FEEDER LENGTH FIRE	70
KTC2000FT33E	KT 3X2000CO FEEDER LENGTH FIRE	70
KTC2000FT33F	KT 3X2000CO FEEDER LENGTH FIRE	70
KTC2000FT340	KT 3X2000CO FEEDER LENGTH FIRE 4M	70
KTC2000FT41A	KT 4X2000CO FEEDER LENGTH FIRE	70
KTC2000FT420	KT 4X2000CO FEEDER LENGTH FIRE 2M	70
KTC2000FT42B	KT 4X2000CO FEEDER LENGTH FIRE	70
KTC2000FT42C	KT 4X2000CO FEEDER LENGTH FIRE	70
KTC2000FT43D	KT 4X2000CO FEEDER LENGTH FIRE	70
KTC2000FT43E	KT 4X2000CO FEEDER LENGTH FIRE	70
KTC2000FT43F	KT 4X2000CO FEEDER LENGTH FIRE	70
KTC2000FT440	KT 4X2000CO FEEDER LENGTH FIRE 4M	70
KTC2000FT51A	KT 5X2000CO FEEDER LENGTH FIRE	70
KTC2000FT520	KT 5X2000CO FEEDER LENGTH FIRE 2M	70
KTC2000FT52B	KT 5X2000CO FEEDER LENGTH FIRE	70
KTC2000FT52C	KT 5X2000CO FEEDER LENGTH FIRE	70
KTC2000FT53D	KT 5X2000CO FEEDER LENGTH FIRE	70
KTC2000FT53E	KT 5X2000CO FEEDER LENGTH FIRE	70
KTC2000FT53F	KT 5X2000CO FEEDER LENGTH FIRE	70
KTC2000FT540	KT 5X2000CO FEEDER LENGTH FIRE 4M	70
KTC2000FT71A	KT 5X2000CO FEEDER LENGTH FIRE	70
KTC2000FT720	KT 5X2000CO FEEDER LENGTH FIRE 2M	70
KTC2000FT72B	KT 5X2000CO FEEDER LENGTH FIRE	70
KTC2000FT72C	KT 5X2000CO FEEDER LENGTH FIRE	70
KTC2000FT73D	KT 5X2000CO FEEDER LENGTH FIRE	70
KTC2000FT73E	KT 5X2000CO FEEDER LENGTH FIRE	70
KTC2000FT73F	KT 5X2000CO FEEDER LENGTH FIRE	70
KTC2000FT740	KT 5X2000CO FEEDER LENGTH FIRE 4M	70
KTC2000LC3A	KT 3X2000CO EDGEWISE ELBOW	61
KTC2000LC3B	KT 3X2000CO EDGEWISE ELBOW	61
KTC2000LC3D	KT 3X2000CO EDGEWISE ELBOW	61
KTC2000LC3E	KT 3X2000CO EDGEWISE ELBOW	61
KTC2000LC4A	KT 4X2000CO EDGEWISE ELBOW	61
KTC2000LC4B	KT 4X2000CO EDGEWISE ELBOW	61
KTC2000LC4D	KT 4X2000CO EDGEWISE ELBOW	61
KTC2000LC4E	KT 4X2000CO EDGEWISE ELBOW	61
KTC2000LC5A	KT 5X2000CO EDGEWISE ELBOW	61
KTC2000LC5B	KT 5X2000CO EDGEWISE ELBOW	61
KTC2000LC5D	KT 5X2000CO EDGEWISE ELBOW	61

Cat. no.	Designations	Pages
KTC2000LC5E	KT 5X2000CO EDGEWISE ELBOW	61
KTC2000LC7A	KT 5X2000CO EDGEWISE ELBOW	61
KTC2000LC7B	KT 5X2000CO EDGEWISE ELBOW	61
KTC2000LC7D	KT 5X2000CO EDGEWISE ELBOW	61
KTC2000LC7E	KT 5X2000CO EDGEWISE ELBOW	61
KTC2000LP3A1	KT 3X2000CO FLAT ELBOW N1	60
KTC2000LP3A2	KT 3X2000CO FLAT ELBOW N2	60
KTC2000LP3B1	KT 3X2000CO FLAT ELBOW N1	60
KTC2000LP3B2	KT 3X2000CO FLAT ELBOW N2	60
KTC2000LP3C1	KT 3X2000CO FLAT ELBOW N1	61
KTC2000LP3C2	KT 3X2000CO FLAT ELBOW N2	61
KTC2000LP3D1	KT 3X2000CO FLAT ELBOW N1	60
KTC2000LP3D2	KT 3X2000CO FLAT ELBOW N2	60
KTC2000LP3E1	KT 3X2000CO FLAT ELBOW N1	60
KTC2000LP3E2	KT 3X2000CO FLAT ELBOW N2	60
KTC2000LP4A1	KT 4X2000CO FLAT ELBOW N1	60
KTC2000LP4A2	KT 4X2000CO FLAT ELBOW N2	60
KTC2000LP4B1	KT 4X2000CO FLAT ELBOW N1	60
KTC2000LP4B2	KT 4X2000CO FLAT ELBOW N2	60
KTC2000LP4C1	KT 4X2000CO FLAT ELBOW N1	61
KTC2000LP4C2	KT 4X2000CO FLAT ELBOW N2	61
KTC2000LP4D1	KT 4X2000CO FLAT ELBOW N1	60
KTC2000LP4D2	KT 4X2000CO FLAT ELBOW N2	60
KTC2000LP4E1	KT 4X2000CO FLAT ELBOW N1	60
KTC2000LP4E2	KT 4X2000CO FLAT ELBOW N2	60
KTC2000LP5A1	KT 5X2000CO FLAT ELBOW N1	60
KTC2000LP5A2	KT 5X2000CO FLAT ELBOW N2	60
KTC2000LP5B1	KT 5X2000CO FLAT ELBOW N1	60
KTC2000LP5B2	KT 5X2000CO FLAT ELBOW N2	60
KTC2000LP5C1	KT 5X2000CO FLAT ELBOW N1	61
KTC2000LP5C2	KT 5X2000CO FLAT ELBOW N2	61
KTC2000LP5D1	KT 5X2000CO FLAT ELBOW N1	60
KTC2000LP5D2	KT 5X2000CO FLAT ELBOW N2	60
KTC2000LP5E1	KT 5X2000CO FLAT ELBOW N1	60
KTC2000LP5E2	KT 5X2000CO FLAT ELBOW N2	60
KTC2000LP7A1	KT 5X2000CO FLAT ELBOW N1	60
KTC2000LP7A2	KT 5X2000CO FLAT ELBOW N2	60
KTC2000LP7B1	KT 5X2000CO FLAT ELBOW N1	60
KTC2000LP7B2	KT 5X2000CO FLAT ELBOW N2	60
KTC2000LP7C1	KT 5X2000CO FLAT ELBOW N1	61
KTC2000LP7C2	KT 5X2000CO FLAT ELBOW N2	61
KTC2000LP7D1	KT 5X2000CO FLAT ELBOW N1	60
KTC2000LP7D2	KT 5X2000CO FLAT ELBOW N2	60
KTC2000LP7E1	KT 5X2000CO FLAT ELBOW N1	60
KTC2000LP7E2	KT 5X2000CO FLAT ELBOW N2	60
KTC2000SL31	KT 3X2000CO ISOLATOR UNIT INV	125
KTC2000SL41	KT 4X2000CO ISOLATOR UNIT INV	125
KTC2000SL51	KT 5X2000CO ISOLATOR UNIT INV	125
KTC2000TC3	KT 3X2000CO TEE ON EDGE	65
KTC2000TC4	KT 4X2000CO TEE ON EDGE	65
KTC2000TC5	KT 5X2000CO TEE ON EDGE	65
KTC2000TC7	KT 5X2000CO TEE ON EDGE	65
KTC2000TN410	KT 4X2000CO NEUTRAL PERMUTA	56
KTC2000TP410	KT 4X2000CO PHASES PERMUTA	56
KTC2000YA3	KT 3X2000CO JUNCTION BLOC	58
KTC2000YA4	KT 4X2000CO JUNCTION BLOC	58
KTC2000YA5	KT 5X2000CO JUNCTION BLOC	58
KTC2000YA7	KT 5X2000CO JUNCTION BLOC	58
KTC2000ZC31	KT 3X2000CO EDGEWISE ZED N1	66
KTC2000ZC32	KT 3X2000CO EDGEWISE ZED N2	66
KTC2000ZC41	KT 4X2000CO EDGEWISE ZED N1	66
KTC2000ZC42	KT 4X2000CO EDGEWISE ZED N2	66
KTC2000ZC51	KT 5X2000CO EDGEWISE ZED N1	66
KTC2000ZC52	KT 5X2000CO EDGEWISE ZED N2	66
KTC2000ZC71	KT 5X2000CO EDGEWISE ZED N1	66

Index of catalogue numbers

Cat. no.	Designations	Pages
KTC2000ZC72	KT 5X2000CO EDGEWISE ZED N2	66
KTC2000ZP3	KT 3X2000CO ZED ON FLAT	66
KTC2000ZP4	KT 4X2000CO ZED ON FLAT	66
KTC2000ZP5	KT 5X2000CO ZED ON FLAT	66
KTC2000ZP7	KT 5X2000CO ZED ON FLAT	66
KTC2500		
KTC2500CP31	KT 3X2500CO FLAT EDGEWISE N1	68
KTC2500CP32	KT 3X2500CO FLAT EDGEWISE N2	68
KTC2500CP33	KT 3X2500CO FLAT EDGEWISE N3	68
KTC2500CP34	KT 3X2500CO FLAT EDGEWISE N4	68
KTC2500CP41	KT 4X2500CO FLAT EDGEWISE N1	68
KTC2500CP42	KT 4X2500CO FLAT EDGEWISE N2	68
KTC2500CP43	KT 4X2500CO FLAT EDGEWISE N3	68
KTC2500CP44	KT 4X2500CO FLAT EDGEWISE N4	68
KTC2500CP51	KT 5X2500CO FLAT EDGEWISE N1	68
KTC2500CP52	KT 5X2500CO FLAT EDGEWISE N2	68
KTC2500CP53	KT 5X2500CO FLAT EDGEWISE N3	68
KTC2500CP54	KT 5X2500CO FLAT EDGEWISE N4	68
KTC2500CP71	KT 5X2500CO FLAT EDGEWISE N1	68
KTC2500CP72	KT 5X2500CO FLAT EDGEWISE N2	68
KTC2500CP73	KT 5X2500CO FLAT EDGEWISE N3	68
KTC2500CP74	KT 5X2500CO FLAT EDGEWISE N4	68
KTC2500DB310	KT 3X2500CO EXPANSION UNIT	56
KTC2500DB410	KT 4X2500CO EXPANSION UNIT	56
KTC2500DB510	KT 5X2500CO EXPANSION UNIT	56
KTC2500DB710	KT 5X2500CO EXPANSION UNIT	56
KTC2500EB320	KT 3X2500CO BOLT ON LENGTH 2M	52
KTC2500EB340	KT 3X2500CO BOLT ON LENGTH 4M	52
KTC2500EB420	KT 4X2500CO BOLT ON LENGTH 2M	52
KTC2500EB440	KT 4X2500CO BOLT ON LENGTH 4M	52
KTC2500EB520	KT 5X2500CO BOLT ON LENGTH 2M	52
KTC2500EB540	KT 5X2500CO BOLT ON LENGTH 4M	52
KTC2500EB720	KT 5X2500CO BOLT ON LENGTH 2M	52
KTC2500EB740	KT 5X2500CO BOLT ON LENGTH 4M	52
KTC2500ED3201	KT 1X2500CO PLUG-IN LENGTH 2M	50
KTC2500ED3203	KT 3X2500CO PLUG-IN LENGTH 2M	50
KTC2500ED3301	KT 1X2500CO PLUG-IN LENGTH	50
KTC2500ED3302	KT 2X2500CO PLUG-IN LENGTH	50
KTC2500ED3351	KT 1X2500CO PLUG-IN LENGTH	50
KTC2500ED3353	KT 3X2500CO PLUG-IN LENGTH	50
KTC2500ED3403	KT 3X2500CO PLUG-IN LENGTH 4M	50
KTC2500ED4201	KT 1X2500CO PLUG-IN LENGTH 2M	50
KTC2500ED4203	KT 4X2500CO PLUG-IN LENGTH 2M	50
KTC2500ED4301	KT 1X2500CO PLUG-IN LENGTH	50
KTC2500ED4302	KT 2X2500CO PLUG-IN LENGTH	50
KTC2500ED4351	KT 1X2500CO PLUG-IN LENGTH	50
KTC2500ED4353	KT 3X2500CO PLUG-IN LENGTH	50
KTC2500ED4403	KT 4X2500CO PLUG-IN LENGTH 4M	50
KTC2500ED5201	KT 1X2500CO PLUG-IN LENGTH 2M	50
KTC2500ED5203	KT 5X2500CO PLUG-IN LENGTH 2M	50
KTC2500ED5301	KT 1X2500CO PLUG-IN LENGTH	50
KTC2500ED5302	KT 2X2500CO PLUG-IN LENGTH	50
KTC2500ED5351	KT 1X2500CO PLUG-IN LENGTH	50
KTC2500ED5353	KT 3X2500CO PLUG-IN LENGTH	50
KTC2500ED5403	KT 5X2500CO PLUG-IN LENGTH 4M	50
KTC2500ED6201	KT 1X2500CO PLUG-IN LENGTH 2M	50
KTC2500ED6203	KT 5X2500CO PLUG-IN LENGTH 2M	50
KTC2500ED6301	KT 1X2500CO PLUG-IN LENGTH	50
KTC2500ED6302	KT 2X2500CO PLUG-IN LENGTH	50
KTC2500ED6351	KT 1X2500CO PLUG-IN LENGTH	50
KTC2500ED6353	KT 3X2500CO PLUG-IN LENGTH	50
KTC2500ED6403	KT 5X2500CO PLUG-IN LENGTH 4M	50
KTC2500ED7201	KT 1X2500CO PLUG-IN LENGTH 2M	50
KTC2500ED7203	KT 5X2500CO PLUG-IN LENGTH 2M	50

Cat. no.	Designations	Pages
KTC2500ED7301	KT 1X2500CO PLUG-IN LENGTH	50
KTC2500ED7302	KT 2X2500CO PLUG-IN LENGTH	50
KTC2500ED7351	KT 1X2500CO PLUG-IN LENGTH	50
KTC2500ED7353	KT 3X2500CO PLUG-IN LENGTH	50
KTC2500ED7403	KT 5X2500CO PLUG-IN LENGTH 4M	50
KTC2500EH320	KT 3X2500CO KH PLUG-IN LENGTH 2M	53
KTC2500EH340	KT 3X2500CO KH PLUG-IN LENGTH 4M	53
KTC2500EH420	KT 4X2500CO KH PLUG-IN LENGTH 2M	53
KTC2500EH440	KT 4X2500CO KH PLUG-IN LENGTH 4M	53
KTC2500EH520	KT 5X2500CO KH PLUG-IN LENGTH 2M	53
KTC2500EH540	KT 5X2500CO KH PLUG-IN LENGTH 4M	53
KTC2500EH720	KT 5X2500CO KH PLUG-IN LENGTH 2M	53
KTC2500EH740	KT 5X2500CO KH PLUG-IN LENGTH 4M	53
KTC2500EL31	KT 3X2500CO FEED UNIT EL N1	92
KTC2500EL32	KT 3X2500CO FEED UNIT EL N2	92
KTC2500EL33	KT 3X2500CO FEED UNIT EL N3	94
KTC2500EL34	KT 3X2500CO FEED UNIT EL N4	94
KTC2500EL35	KT 3X2500CO FEED UNIT EL N5	95
KTC2500EL41	KT 4X2500CO FEED UNIT EL N1	92
KTC2500EL42	KT 4X2500CO FEED UNIT EL N2	92
KTC2500EL43	KT 4X2500CO FEED UNIT EL N3	94
KTC2500EL44	KT 4X2500CO FEED UNIT EL N4	94
KTC2500EL45	KT 4X2500CO FEED UNIT EL N5	95
KTC2500EL51	KT 5X2500CO FEED UNIT EL N1	92
KTC2500EL52	KT 5X2500CO FEED UNIT EL N2	92
KTC2500EL53	KT 5X2500CO FEED UNIT EL N3	94
KTC2500EL54	KT 5X2500CO FEED UNIT EL N4	94
KTC2500EL55	KT 5X2500CO FEED UNIT EL N5	95
KTC2500EL71	KT 5X2500CO FEED UNIT EL N1	92
KTC2500EL72	KT 5X2500CO FEED UNIT EL N2	92
KTC2500EL73	KT 5X2500CO FEED UNIT EL N3	94
KTC2500EL74	KT 5X2500CO FEED UNIT EL N4	94
KTC2500EL75	KT 5X2500CO FEED UNIT EL N5	95
KTC2500ER31	KT 3X2500CO FEED UNIT ER N1	79
KTC2500ER32	KT 3X2500CO FEED UNIT ER N2	79
KTC2500ER33	KT 3X2500CO FEED UNIT ER N3	80
KTC2500ER34	KT 3X2500CO FEED UNIT ER N4	80
KTC2500ER35	KT 3X2500CO FEED UNIT ER N5	81
KTC2500ER36	KT 3X2500CO FEED UNIT ER N6	81
KTC2500ER37	KT 3X2500CO FEED UNIT ER N7	85
KTC2500ER41	KT 4X2500CO FEED UNIT ER N1	79
KTC2500ER42	KT 4X2500CO FEED UNIT ER N2	79
KTC2500ER43	KT 4X2500CO FEED UNIT ER N3	80
KTC2500ER44	KT 4X2500CO FEED UNIT ER N4	80
KTC2500ER45	KT 4X2500CO FEED UNIT ER N5	81
KTC2500ER46	KT 4X2500CO FEED UNIT ER N6	81
KTC2500ER47	KT 4X2500CO FEED UNIT ER N7	85
KTC2500ER51	KT 5X2500CO FEED UNIT ER N1	79
KTC2500ER52	KT 5X2500CO FEED UNIT ER N2	79
KTC2500ER53	KT 5X2500CO FEED UNIT ER N3	80
KTC2500ER54	KT 5X2500CO FEED UNIT ER N4	80
KTC2500ER55	KT 5X2500CO FEED UNIT ER N5	81
KTC2500ER56	KT 5X2500CO FEED UNIT ER N6	81
KTC2500ER57	KT 5X2500CO FEED UNIT ER N7	85
KTC2500ER71	KT 5X2500CO FEED UNIT ER N1	79
KTC2500ER72	KT 5X2500CO FEED UNIT ER N2	79
KTC2500ER73	KT 5X2500CO FEED UNIT ER N3	80
KTC2500ER74	KT 5X2500CO FEED UNIT ER N4	80
KTC2500ER75	KT 5X2500CO FEED UNIT ER N5	81
KTC2500ER76	KT 5X2500CO FEED UNIT ER N6	81
KTC2500ER77	KT 5X2500CO FEED UNIT ER N7	85
KTC2500ET31A	KT 3X2500CO FEEDER LENGTH	50
KTC2500ET320	KT 3X2500CO FEEDER LENGTH 2M	50
KTC2500ET32B	KT 3X2500CO FEEDER LENGTH	50
KTC2500ET32C	KT 3X2500CO FEEDER LENGTH	50

Index of catalogue numbers

Cat. no.	Designations	Pages
KTC2500ET33D	KT 3X2500CO FEEDER LENGTH	50
KTC2500ET33E	KT 3X2500CO FEEDER LENGTH	50
KTC2500ET33F	KT 3X2500CO FEEDER LENGTH	50
KTC2500ET340	KT 3X2500CO FEEDER LENGTH 4M	50
KTC2500ET41A	KT 4X2500CO FEEDER LENGTH	50
KTC2500ET420	KT 4X2500CO FEEDER LENGTH 2M	50
KTC2500ET42B	KT 4X2500CO FEEDER LENGTH	50
KTC2500ET42C	KT 4X2500CO FEEDER LENGTH	50
KTC2500ET43D	KT 4X2500CO FEEDER LENGTH	50
KTC2500ET43E	KT 4X2500CO FEEDER LENGTH	50
KTC2500ET43F	KT 4X2500CO FEEDER LENGTH	50
KTC2500ET440	KT 4X2500CO FEEDER LENGTH 4M	50
KTC2500ET51A	KT 5X2500CO FEEDER LENGTH	50
KTC2500ET520	KT 5X2500CO FEEDER LENGTH 2M	50
KTC2500ET52B	KT 5X2500CO FEEDER LENGTH	50
KTC2500ET52C	KT 5X2500CO FEEDER LENGTH	50
KTC2500ET53D	KT 5X2500CO FEEDER LENGTH	50
KTC2500ET53E	KT 5X2500CO FEEDER LENGTH	50
KTC2500ET53F	KT 5X2500CO FEEDER LENGTH	50
KTC2500ET540	KT 5X2500CO FEEDER LENGTH 4M	50
KTC2500ET71A	KT 5X2500CO FEEDER LENGTH	50
KTC2500ET720	KT 5X2500CO FEEDER LENGTH 2M	50
KTC2500ET72B	KT 5X2500CO FEEDER LENGTH	50
KTC2500ET72C	KT 5X2500CO FEEDER LENGTH	50
KTC2500ET73D	KT 5X2500CO FEEDER LENGTH	50
KTC2500ET73E	KT 5X2500CO FEEDER LENGTH	50
KTC2500ET73F	KT 5X2500CO FEEDER LENGTH	50
KTC2500ET740	KT 5X2500CO FEEDER LENGTH 4M	50
KTC2500FC3A	KT 3X2500CO EDGEWISE ELBOW	73
KTC2500FC3B	KT 3X2500CO EDGEWISE ELBOW	73
KTC2500FC3D	KT 3X2500CO EDGEWISE ELBOW	73
KTC2500FC3E	KT 3X2500CO EDGEWISE ELBOW	73
KTC2500FC4A	KT 4X2500CO EDGEWISE ELBOW	73
KTC2500FC4B	KT 4X2500CO EDGEWISE ELBOW	73
KTC2500FC4D	KT 4X2500CO EDGEWISE ELBOW	73
KTC2500FC4E	KT 4X2500CO EDGEWISE ELBOW	73
KTC2500FC5A	KT 5X2500CO EDGEWISE ELBOW	73
KTC2500FC5B	KT 5X2500CO EDGEWISE ELBOW	73
KTC2500FC5D	KT 5X2500CO EDGEWISE ELBOW	73
KTC2500FC5E	KT 5X2500CO EDGEWISE ELBOW	73
KTC2500FC7A	KT 5X2500CO EDGEWISE ELBOW	73
KTC2500FC7B	KT 5X2500CO EDGEWISE ELBOW	73
KTC2500FC7D	KT 5X2500CO EDGEWISE ELBOW	73
KTC2500FC7E	KT 5X2500CO EDGEWISE ELBOW	73
KTC2500FJ3	KT 3X2500CU JUNCTION BLOC FIRE RATED	71
KTC2500FJ4	KT 4X2500CU JUNCTION BLOC FIRE RATED	71
KTC2500FJ5	KT 5X2500CU JUNCTION BLOC FIRE RATED	71
KTC2500FJ7	KT 5X2500CU JUNCTION BLOC FIRE RATED	71
KTC2500FP3A1	KT 3X2500CO FLAT ELBOW N1 FIRE	72
KTC2500FP3A2	KT 3X2500CO FLAT ELBOW N2 FIRE	72
KTC2500FP3B1	KT 3X2500CO FLAT ELBOW N1 FIRE	72
KTC2500FP3B2	KT 3X2500CO FLAT ELBOW N2 FIRE	72
KTC2500FP3D1	KT 3X2500CO FLAT ELBOW N1 FIRE	72
KTC2500FP3D2	KT 3X2500CO FLAT ELBOW N2 FIRE	72
KTC2500FP3E1	KT 3X2500CO FLAT ELBOW N1 FIRE	72
KTC2500FP3E2	KT 3X2500CO FLAT ELBOW N2 FIRE	72
KTC2500FP4A1	KT 4X2500CO FLAT ELBOW N1 FIRE	72
KTC2500FP4A2	KT 4X2500CO FLAT ELBOW N2 FIRE	72
KTC2500FP4B1	KT 4X2500CO FLAT ELBOW N1 FIRE	72
KTC2500FP4B2	KT 4X2500CO FLAT ELBOW N2 FIRE	72
KTC2500FP4D1	KT 4X2500CO FLAT ELBOW N1 FIRE	72
KTC2500FP4D2	KT 4X2500CO FLAT ELBOW N2 FIRE	72
KTC2500FP4E1	KT 4X2500CO FLAT ELBOW N1 FIRE	72
KTC2500FP4E2	KT 4X2500CO FLAT ELBOW N2 FIRE	72
KTC2500FP5A1	KT 5X2500CO FLAT ELBOW N1 FIRE	72
KTC2500FP5A2	KT 5X2500CO FLAT ELBOW N2 FIRE	72
KTC2500FP5B1	KT 5X2500CO FLAT ELBOW N1 FIRE	72
KTC2500FP5B2	KT 5X2500CO FLAT ELBOW N2 FIRE	72
KTC2500FP5D1	KT 5X2500CO FLAT ELBOW N1 FIRE	72
KTC2500FP5D2	KT 5X2500CO FLAT ELBOW N2 FIRE	72
KTC2500FP5E1	KT 5X2500CO FLAT ELBOW N1 FIRE	72
KTC2500FP5E2	KT 5X2500CO FLAT ELBOW N2 FIRE	72
KTC2500FP7A1	KT 5X2500CO FLAT ELBOW N1 FIRE	72
KTC2500FP7A2	KT 5X2500CO FLAT ELBOW N2 FIRE	72
KTC2500FP7B1	KT 5X2500CO FLAT ELBOW N1 FIRE	72
KTC2500FP7B2	KT 5X2500CO FLAT ELBOW N2 FIRE	72
KTC2500FP7D1	KT 5X2500CO FLAT ELBOW N1 FIRE	72
KTC2500FP7D2	KT 5X2500CO FLAT ELBOW N2 FIRE	72
KTC2500FP7E1	KT 5X2500CO FLAT ELBOW N1 FIRE	72
KTC2500FP7E2	KT 5X2500CO FLAT ELBOW N2 FIRE	72
KTC2500FT31A	KT 3X2500CO FEEDER LENGTH FIRE	70
KTC2500FT320	KT 3X2500CO FEEDER LENGTH FIRE 2M	70
KTC2500FT32B	KT 3X2500CO FEEDER LENGTH FIRE	70
KTC2500FT32C	KT 3X2500CO FEEDER LENGTH FIRE	70
KTC2500FT33D	KT 3X2500CO FEEDER LENGTH FIRE	70
KTC2500FT33E	KT 3X2500CO FEEDER LENGTH FIRE	70
KTC2500FT33F	KT 3X2500CO FEEDER LENGTH FIRE	70
KTC2500FT340	KT 3X2500CO FEEDER LENGTH FIRE 4M	70
KTC2500FT41A	KT 4X2500CO FEEDER LENGTH FIRE	70
KTC2500FT420	KT 4X2500CO FEEDER LENGTH FIRE 2M	70
KTC2500FT42B	KT 4X2500CO FEEDER LENGTH FIRE	70
KTC2500FT42C	KT 4X2500CO FEEDER LENGTH FIRE	70
KTC2500FT43D	KT 4X2500CO FEEDER LENGTH FIRE	70
KTC2500FT43E	KT 4X2500CO FEEDER LENGTH FIRE	70
KTC2500FT43F	KT 4X2500CO FEEDER LENGTH FIRE	70
KTC2500FT440	KT 4X2500CO FEEDER LENGTH FIRE 4M	70
KTC2500FT51A	KT 5X2500CO FEEDER LENGTH FIRE	70
KTC2500FT520	KT 5X2500CO FEEDER LENGTH FIRE 2M	70
KTC2500FT52B	KT 5X2500CO FEEDER LENGTH FIRE	70
KTC2500FT52C	KT 5X2500CO FEEDER LENGTH FIRE	70
KTC2500FT53D	KT 5X2500CO FEEDER LENGTH FIRE	70
KTC2500FT53E	KT 5X2500CO FEEDER LENGTH FIRE	70
KTC2500FT53F	KT 5X2500CO FEEDER LENGTH FIRE	70
KTC2500FT540	KT 5X2500CO FEEDER LENGTH FIRE 4M	70
KTC2500FT71A	KT 5X2500CO FEEDER LENGTH FIRE	70
KTC2500FT720	KT 5X2500CO FEEDER LENGTH FIRE 2M	70
KTC2500FT72B	KT 5X2500CO FEEDER LENGTH FIRE	70
KTC2500FT72C	KT 5X2500CO FEEDER LENGTH FIRE	70
KTC2500FT73D	KT 5X2500CO FEEDER LENGTH FIRE	70
KTC2500FT73E	KT 5X2500CO FEEDER LENGTH FIRE	70
KTC2500FT73F	KT 5X2500CO FEEDER LENGTH FIRE	70
KTC2500FT740	KT 5X2500CO FEEDER LENGTH FIRE 4M	70
KTC2500LC3A	KT 3X2500CO EDGEWISE ELBOW	61
KTC2500LC3B	KT 3X2500CO EDGEWISE ELBOW	61
KTC2500LC3D	KT 3X2500CO EDGEWISE ELBOW	61
KTC2500LC3E	KT 3X2500CO EDGEWISE ELBOW	61
KTC2500LC4A	KT 4X2500CO EDGEWISE ELBOW	61
KTC2500LC4B	KT 4X2500CO EDGEWISE ELBOW	61
KTC2500LC4D	KT 4X2500CO EDGEWISE ELBOW	61
KTC2500LC4E	KT 4X2500CO EDGEWISE ELBOW	61
KTC2500LC5A	KT 5X2500CO EDGEWISE ELBOW	61
KTC2500LC5B	KT 5X2500CO EDGEWISE ELBOW	61
KTC2500LC5D	KT 5X2500CO EDGEWISE ELBOW	61
KTC2500LC5E	KT 5X2500CO EDGEWISE ELBOW	61
KTC2500LC7A	KT 5X2500CO EDGEWISE ELBOW	61
KTC2500LC7B	KT 5X2500CO EDGEWISE ELBOW	61
KTC2500LC7D	KT 5X2500CO EDGEWISE ELBOW	61
KTC2500LC7E	KT 5X2500CO EDGEWISE ELBOW	61
KTC2500LP3A1	KT 3X2500CO FLAT ELBOW N1	60
KTC2500LP3A2	KT 3X2500CO FLAT ELBOW N2	60

Index of catalogue numbers

Cat. no.	Designations	Pages
KTC2500LP3B1	KT 3X2500CO FLAT ELBOW N1	60
KTC2500LP3B2	KT 3X2500CO FLAT ELBOW N2	60
KTC2500LP3C1	KT 3X2500CO FLAT ELBOW N1	61
KTC2500LP3C2	KT 3X2500CO FLAT ELBOW N2	61
KTC2500LP3D1	KT 3X2500CO FLAT ELBOW N1	60
KTC2500LP3D2	KT 3X2500CO FLAT ELBOW N2	60
KTC2500LP3E1	KT 3X2500CO FLAT ELBOW N1	60
KTC2500LP3E2	KT 3X2500CO FLAT ELBOW N2	60
KTC2500LP4A1	KT 4X2500CO FLAT ELBOW N1	60
KTC2500LP4A2	KT 4X2500CO FLAT ELBOW N2	60
KTC2500LP4B1	KT 4X2500CO FLAT ELBOW N1	60
KTC2500LP4B2	KT 4X2500CO FLAT ELBOW N2	60
KTC2500LP4C1	KT 4X2500CO FLAT ELBOW N1	61
KTC2500LP4C2	KT 4X2500CO FLAT ELBOW N2	61
KTC2500LP4D1	KT 4X2500CO FLAT ELBOW N1	60
KTC2500LP4D2	KT 4X2500CO FLAT ELBOW N2	60
KTC2500LP4E1	KT 4X2500CO FLAT ELBOW N1	60
KTC2500LP4E2	KT 4X2500CO FLAT ELBOW N2	60
KTC2500LP5A1	KT 5X2500CO FLAT ELBOW N1	60
KTC2500LP5A2	KT 5X2500CO FLAT ELBOW N2	60
KTC2500LP5B1	KT 5X2500CO FLAT ELBOW N1	60
KTC2500LP5B2	KT 5X2500CO FLAT ELBOW N2	60
KTC2500LP5C1	KT 5X2500CO FLAT ELBOW N1	61
KTC2500LP5C2	KT 5X2500CO FLAT ELBOW N2	61
KTC2500LP5D1	KT 5X2500CO FLAT ELBOW N1	60
KTC2500LP5D2	KT 5X2500CO FLAT ELBOW N2	60
KTC2500LP5E1	KT 5X2500CO FLAT ELBOW N1	60
KTC2500LP5E2	KT 5X2500CO FLAT ELBOW N2	60
KTC2500LP7A1	KT 5X2500CO FLAT ELBOW N1	60
KTC2500LP7A2	KT 5X2500CO FLAT ELBOW N2	60
KTC2500LP7B1	KT 5X2500CO FLAT ELBOW N1	60
KTC2500LP7B2	KT 5X2500CO FLAT ELBOW N2	60
KTC2500LP7C1	KT 5X2500CO FLAT ELBOW N1	61
KTC2500LP7C2	KT 5X2500CO FLAT ELBOW N2	61
KTC2500LP7D1	KT 5X2500CO FLAT ELBOW N1	60
KTC2500LP3D2	KT 5X2500CO FLAT ELBOW N2	60
KTC2500LP7E1	KT 5X2500CO FLAT ELBOW N1	60
KTC2500LP7E2	KT 5X2500CO FLAT ELBOW N2	60
KTC2500SL31	KT 3X2500CO ISOLATOR UNIT INV	125
KTC2500SL41	KT 4X2500CO ISOLATOR UNIT INV	125
KTC2500SL51	KT 5X2500CO ISOLATOR UNIT INV	125
KTC2500TC3	KT 3X2500CO TEE ON EDGE	65
KTC2500TC4	KT 4X2500CO TEE ON EDGE	65
KTC2500TC5	KT 5X2500CO TEE ON EDGE	65
KTC2500TC7	KT 5X2500CO TEE ON EDGE	65
KTC2500TN410	KT 4X2500CO NEUTRAL PERMUTA	56
KTC2500TP410	KT 4X2500CO PHASES PERMUTA	56
KTC2500YA3	KT 3X2500CO JUNCTION BLOC	58
KTC2500YA4	KT 4X2500CO JUNCTION BLOC	58
KTC2500YA5	KT 5X2500CO JUNCTION BLOC	58
KTC2500YA7	KT 5X2500CO JUNCTION BLOC	58
KTC2500ZC31	KT 3X2500CO EDGEWISE ZED N1	66
KTC2500ZC32	KT 3X2500CO EDGEWISE ZED N2	66
KTC2500ZC41	KT 4X2500CO EDGEWISE ZED N1	66
KTC2500ZC42	KT 4X2500CO EDGEWISE ZED N2	66
KTC2500ZC51	KT 5X2500CO EDGEWISE ZED N1	66
KTC2500ZC52	KT 5X2500CO EDGEWISE ZED N2	66
KTC2500ZC71	KT 5X2500CO EDGEWISE ZED N1	66
KTC2500ZC72	KT 5X2500CO EDGEWISE ZED N2	66
KTC2500ZP3	KT 3X2500CO ZED ON FLAT	66
KTC2500ZP4	KT 4X2500CO ZED ON FLAT	66
KTC2500ZP5	KT 5X2500CO ZED ON FLAT	66
KTC2500ZP7	KT 5X2500CO ZED ON FLAT	66

Cat. no.	Designations	Pages
KTC3200		
KTC3200CP31	KT 3X3200CO FLAT EDGEWISE N1	68
KTC3200CP32	KT 3X3200CO FLAT EDGEWISE N2	68
KTC3200CP33	KT 3X3200CO FLAT EDGEWISE N3	68
KTC3200CP34	KT 3X3200CO FLAT EDGEWISE N4	68
KTC3200CP41	KT 4X3200CO FLAT EDGEWISE N1	68
KTC3200CP42	KT 4X3200CO FLAT EDGEWISE N2	68
KTC3200CP43	KT 4X3200CO FLAT EDGEWISE N3	68
KTC3200CP44	KT 4X3200CO FLAT EDGEWISE N4	68
KTC3200CP51	KT 5X3200CO FLAT EDGEWISE N1	68
KTC3200CP52	KT 5X3200CO FLAT EDGEWISE N2	68
KTC3200CP53	KT 5X3200CO FLAT EDGEWISE N3	68
KTC3200CP54	KT 5X3200CO FLAT EDGEWISE N4	68
KTC3200CP71	KT 5X3200CO FLAT EDGEWISE N1	68
KTC3200CP72	KT 5X3200CO FLAT EDGEWISE N2	68
KTC3200CP73	KT 5X3200CO FLAT EDGEWISE N3	68
KTC3200CP74	KT 5X3200CO FLAT EDGEWISE N4	68
KTC3200DB310	KT 3X3200CO EXPANSION UNIT	56
KTC3200DB410	KT 4X3200CO EXPANSION UNIT	56
KTC3200DB510	KT 5X3200CO EXPANSION UNIT	56
KTC3200DB710	KT 5X3200CO EXPANSION UNIT	56
KTC3200EB320	KT 3X3200CO BOLT ON LENGTH 2M	52
KTC3200EB340	KT 3X3200CO BOLT ON LENGTH 4M	52
KTC3200EB420	KT 4X3200CO BOLT ON LENGTH 2M	52
KTC3200EB440	KT 4X3200CO BOLT ON LENGTH 4M	52
KTC3200EB520	KT 5X3200CO BOLT ON LENGTH 2M	52
KTC3200EB540	KT 5X3200CO BOLT ON LENGTH 4M	52
KTC3200EB720	KT 5X3200CO BOLT ON LENGTH 2M	52
KTC3200EB740	KT 5X3200CO BOLT ON LENGTH 4M	52
KTC3200ED3201	KT 1X3200CO PLUG-IN LENGTH 2M	50
KTC3200ED3203	KT 3X3200CO PLUG-IN LENGTH 2M	50
KTC3200ED3301	KT 1X3200CO PLUG-IN LENGTH	50
KTC3200ED3302	KT 2X3200CO PLUG-IN LENGTH	50
KTC3200ED3351	KT 1X3200CO PLUG-IN LENGTH	50
KTC3200ED3353	KT 3X3200CO PLUG-IN LENGTH	50
KTC3200ED3403	KT 3X3200CO PLUG-IN LENGTH 4M	50
KTC3200ED4201	KT 1X3200CO PLUG-IN LENGTH 2M	50
KTC3200ED4203	KT 4X3200CO PLUG-IN LENGTH 2M	50
KTC3200ED4301	KT 1X3200CO PLUG-IN LENGTH	50
KTC3200ED4302	KT 2X3200CO PLUG-IN LENGTH	50
KTC3200ED4351	KT 1X3200CO PLUG-IN LENGTH	50
KTC3200ED4353	KT 3X3200CO PLUG-IN LENGTH	50
KTC3200ED4403	KT 4X3200CO PLUG-IN LENGTH 4M	50
KTC3200ED5201	KT 1X3200CO PLUG-IN LENGTH 2M	50
KTC3200ED5203	KT 5X3200CO PLUG-IN LENGTH 2M	50
KTC3200ED5301	KT 1X3200CO PLUG-IN LENGTH	50
KTC3200ED5302	KT 2X3200CO PLUG-IN LENGTH	50
KTC3200ED5351	KT 1X3200CO PLUG-IN LENGTH	50
KTC3200ED5353	KT 3X3200CO PLUG-IN LENGTH	50
KTC3200ED5403	KT 5X3200CO PLUG-IN LENGTH 4M	50
KTC3200ED6201	KT 1X3200CO PLUG-IN LENGTH 2M	50
KTC3200ED6203	KT 5X3200CO PLUG-IN LENGTH 2M	50
KTC3200ED6301	KT 1X3200CO PLUG-IN LENGTH	50
KTC3200ED6302	KT 2X3200CO PLUG-IN LENGTH	50
KTC3200ED6351	KT 1X3200CO PLUG-IN LENGTH	50
KTC3200ED6353	KT 3X3200CO PLUG-IN LENGTH	50
KTC3200ED6403	KT 5X3200CO PLUG-IN LENGTH 4M	50
KTC3200ED7201	KT 1X3200CO PLUG-IN LENGTH 2M	50
KTC3200ED7203	KT 5X3200CO PLUG-IN LENGTH 2M	50
KTC3200ED7301	KT 1X3200CO PLUG-IN LENGTH	50
KTC3200ED7302	KT 2X3200CO PLUG-IN LENGTH	50
KTC3200ED7351	KT 1X3200CO PLUG-IN LENGTH	50
KTC3200ED7353	KT 3X3200CO PLUG-IN LENGTH	50
KTC3200ED7403	KT 5X3200CO PLUG-IN LENGTH 4M	50
KTC3200EH320	KT 3X3200CO KH PLUG-IN LENGTH 2M	53

Index of catalogue numbers

Cat. no.	Designations	Pages
KTC3200EH340	KT 3X3200CO KH PLUG-IN LENGTH 4M	53
KTC3200EH420	KT 4X3200CO KH PLUG-IN LENGTH 2M	53
KTC3200EH440	KT 4X3200CO KH PLUG-IN LENGTH 4M	53
KTC3200EH520	KT 5X3200CO KH PLUG-IN LENGTH 2M	53
KTC3200EH540	KT 5X3200CO KH PLUG-IN LENGTH 4M	53
KTC3200EH720	KT 5X3200CO KH PLUG-IN LENGTH 2M	53
KTC3200EH740	KT 5X3200CO KH PLUG-IN LENGTH 4M	53
KTC3200EL31	KT 3X3200CO FEED UNIT EL N1	92
KTC3200EL32	KT 3X3200CO FEED UNIT EL N2	92
KTC3200EL33	KT 3X3200CO FEED UNIT EL N3	94
KTC3200EL34	KT 3X3200CO FEED UNIT EL N4	94
KTC3200EL35	KT 3X3200CO FEED UNIT EL N5	95
KTC3200EL41	KT 4X3200CO FEED UNIT EL N1	92
KTC3200EL42	KT 4X3200CO FEED UNIT EL N2	92
KTC3200EL43	KT 4X3200CO FEED UNIT EL N3	94
KTC3200EL44	KT 4X3200CO FEED UNIT EL N4	94
KTC3200EL45	KT 4X3200CO FEED UNIT EL N5	95
KTC3200EL51	KT 5X3200CO FEED UNIT EL N1	92
KTC3200EL52	KT 5X3200CO FEED UNIT EL N2	92
KTC3200EL53	KT 5X3200CO FEED UNIT EL N3	94
KTC3200EL54	KT 5X3200CO FEED UNIT EL N4	94
KTC3200EL55	KT 5X3200CO FEED UNIT EL N5	95
KTC3200EL71	KT 5X3200CO FEED UNIT EL N1	92
KTC3200EL72	KT 5X3200CO FEED UNIT EL N2	92
KTC3200EL73	KT 5X3200CO FEED UNIT EL N3	94
KTC3200EL74	KT 5X3200CO FEED UNIT EL N4	94
KTC3200EL75	KT 5X3200CO FEED UNIT EL N5	95
KTC3200ER31	KT 3X3200CO FEED UNIT ER N1	79
KTC3200ER32	KT 3X3200CO FEED UNIT ER N2	79
KTC3200ER33	KT 3X3200CO FEED UNIT ER N3	80
KTC3200ER34	KT 3X3200CO FEED UNIT ER N4	80
KTC3200ER35	KT 3X3200CO FEED UNIT ER N5	81
KTC3200ER36	KT 3X3200CO FEED UNIT ER N6	81
KTC3200ER37	KT 3X3200CO FEED UNIT ER N7	85
KTC3200ER41	KT 4X3200CO FEED UNIT ER N1	79
KTC3200ER42	KT 4X3200CO FEED UNIT ER N2	79
KTC3200ER43	KT 4X3200CO FEED UNIT ER N3	80
KTC3200ER44	KT 4X3200CO FEED UNIT ER N4	80
KTC3200ER45	KT 4X3200CO FEED UNIT ER N5	81
KTC3200ER46	KT 4X3200CO FEED UNIT ER N6	81
KTC3200ER47	KT 4X3200CO FEED UNIT ER N7	85
KTC3200ER51	KT 5X3200CO FEED UNIT ER N1	79
KTC3200ER52	KT 5X3200CO FEED UNIT ER N2	79
KTC3200ER53	KT 5X3200CO FEED UNIT ER N3	80
KTC3200ER54	KT 5X3200CO FEED UNIT ER N4	80
KTC3200ER55	KT 5X3200CO FEED UNIT ER N5	81
KTC3200ER56	KT 5X3200CO FEED UNIT ER N6	81
KTC3200ER57	KT 5X3200CO FEED UNIT ER N7	85
KTC3200ER71	KT 5X3200CO FEED UNIT ER N1	79
KTC3200ER72	KT 5X3200CO FEED UNIT ER N2	79
KTC3200ER73	KT 5X3200CO FEED UNIT ER N3	80
KTC3200ER74	KT 5X3200CO FEED UNIT ER N4	80
KTC3200ER75	KT 5X3200CO FEED UNIT ER N5	81
KTC3200ER76	KT 5X3200CO FEED UNIT ER N6	81
KTC3200ER77	KT 5X3200CO FEED UNIT ER N7	85
KTC3200ET31A	KT 3X3200CO FEEDER LENGTH	50
KTC3200ET320	KT 3X3200CO FEEDER LENGTH 2M	50
KTC3200ET32B	KT 3X3200CO FEEDER LENGTH	50
KTC3200ET32C	KT 3X3200CO FEEDER LENGTH	50
KTC3200ET33D	KT 3X3200CO FEEDER LENGTH	50
KTC3200ET33E	KT 3X3200CO FEEDER LENGTH	50
KTC3200ET33F	KT 3X3200CO FEEDER LENGTH	50
KTC3200ET340	KT 3X3200CO FEEDER LENGTH 4M	50
KTC3200ET41A	KT 4X3200CO FEEDER LENGTH	50

Cat. no.	Designations	Pages
KTC3200ET420	KT 4X3200CO FEEDER LENGTH 2M	50
KTC3200ET42B	KT 4X3200CO FEEDER LENGTH	50
KTC3200ET42C	KT 4X3200CO FEEDER LENGTH	50
KTC3200ET43D	KT 4X3200CO FEEDER LENGTH	50
KTC3200ET43E	KT 4X3200CO FEEDER LENGTH	50
KTC3200ET43F	KT 4X3200CO FEEDER LENGTH	50
KTC3200ET440	KT 4X3200CO FEEDER LENGTH 4M	50
KTC3200ET51A	KT 5X3200CO FEEDER LENGTH	50
KTC3200ET520	KT 5X3200CO FEEDER LENGTH 2M	50
KTC3200ET52B	KT 5X3200CO FEEDER LENGTH	50
KTC3200ET52C	KT 5X3200CO FEEDER LENGTH	50
KTC3200ET53D	KT 5X3200CO FEEDER LENGTH	50
KTC3200ET53E	KT 5X3200CO FEEDER LENGTH	50
KTC3200ET53F	KT 5X3200CO FEEDER LENGTH	50
KTC3200ET540	KT 5X3200CO FEEDER LENGTH 4M	50
KTC3200ET71A	KT 5X3200CO FEEDER LENGTH	50
KTC3200ET720	KT 5X3200CO FEEDER LENGTH 2M	50
KTC3200ET72B	KT 5X3200CO FEEDER LENGTH	50
KTC3200ET72C	KT 5X3200CO FEEDER LENGTH	50
KTC3200ET73D	KT 5X3200CO FEEDER LENGTH	50
KTC3200ET73E	KT 5X3200CO FEEDER LENGTH	50
KTC3200ET73F	KT 5X3200CO FEEDER LENGTH	50
KTC3200ET740	KT 5X3200CO FEEDER LENGTH 4M	50
KTC3200FC3A	KT 3X3200CO EDGEWISE ELBOW	73
KTC3200FC3B	KT 3X3200CO EDGEWISE ELBOW	73
KTC3200FC3D	KT 3X3200CO EDGEWISE ELBOW	73
KTC3200FC3E	KT 3X3200CO EDGEWISE ELBOW	73
KTC3200FC4A	KT 4X3200CO EDGEWISE ELBOW	73
KTC3200FC4B	KT 4X3200CO EDGEWISE ELBOW	73
KTC3200FC4D	KT 4X3200CO EDGEWISE ELBOW	73
KTC3200FC4E	KT 4X3200CO EDGEWISE ELBOW	73
KTC3200FC5A	KT 5X3200CO EDGEWISE ELBOW	73
KTC3200FC5B	KT 5X3200CO EDGEWISE ELBOW	73
KTC3200FC5D	KT 5X3200CO EDGEWISE ELBOW	73
KTC3200FC5E	KT 5X3200CO EDGEWISE ELBOW	73
KTC3200FC7A	KT 5X3200CO EDGEWISE ELBOW	73
KTC3200FC7B	KT 5X3200CO EDGEWISE ELBOW	73
KTC3200FC7D	KT 5X3200CO EDGEWISE ELBOW	73
KTC3200FC7E	KT 5X3200CO EDGEWISE ELBOW	73
KTC3200FJ3	KT 3X3200CU JUNCTION BLOC FIRE RATED	71
KTC3200FJ4	KT 4X3200CU JUNCTION BLOC FIRE RATED	71
KTC3200FJ5	KT 5X3200CU JUNCTION BLOC FIRE RATED	71
KTC3200FJ7	KT 5X3200CU JUNCTION BLOC FIRE RATED	71
KTC3200FP3A1	KT 3X3200CO FLAT ELBOW N1 FIRE	72
KTC3200FP3A2	KT 3X3200CO FLAT ELBOW N2 FIRE	72
KTC3200FP3B1	KT 3X3200CO FLAT ELBOW N1 FIRE	72
KTC3200FP3B2	KT 3X3200CO FLAT ELBOW N2 FIRE	72
KTC3200FP3D1	KT 3X3200CO FLAT ELBOW N1 FIRE	72
KTC3200FP3D2	KT 3X3200CO FLAT ELBOW N2 FIRE	72
KTC3200FP3E1	KT 3X3200CO FLAT ELBOW N1 FIRE	72
KTC3200FP3E2	KT 3X3200CO FLAT ELBOW N2 FIRE	72
KTC3200FP4A1	KT 4X3200CO FLAT ELBOW N1 FIRE	72
KTC3200FP4A2	KT 4X3200CO FLAT ELBOW N2 FIRE	72
KTC3200FP4B1	KT 4X3200CO FLAT ELBOW N1 FIRE	72
KTC3200FP4B2	KT 4X3200CO FLAT ELBOW N2 FIRE	72
KTC3200FP4D1	KT 4X3200CO FLAT ELBOW N1 FIRE	72
KTC3200FP4D2	KT 4X3200CO FLAT ELBOW N2 FIRE	72
KTC3200FP4E1	KT 4X3200CO FLAT ELBOW N1 FIRE	72
KTC3200FP4E2	KT 4X3200CO FLAT ELBOW N2 FIRE	72
KTC3200FP5A1	KT 5X3200CO FLAT ELBOW N1 FIRE	72
KTC3200FP5A2	KT 5X3200CO FLAT ELBOW N2 FIRE	72
KTC3200FP5B1	KT 5X3200CO FLAT ELBOW N1 FIRE	72
KTC3200FP5B2	KT 5X3200CO FLAT ELBOW N2 FIRE	72
KTC3200FP5D1	KT 5X3200CO FLAT ELBOW N1 FIRE	72

Index of catalogue numbers

Cat. no.	Designations	Pages
KTC3200FP5D2	KT 5X3200CO FLAT ELBOW N2 FIRE	72
KTC3200FP5E1	KT 5X3200CO FLAT ELBOW N1 FIRE	72
KTC3200FP5E2	KT 5X3200CO FLAT ELBOW N2 FIRE	72
KTC3200FP7A1	KT 5X3200CO FLAT ELBOW N1 FIRE	72
KTC3200FP7A2	KT 5X3200CO FLAT ELBOW N2 FIRE	72
KTC3200FP7B1	KT 5X3200CO FLAT ELBOW N1 FIRE	72
KTC3200FP7B2	KT 5X3200CO FLAT ELBOW N2 FIRE	72
KTC3200FP7D1	KT 5X3200CO FLAT ELBOW N1 FIRE	72
KTC3200FP7D2	KT 5X3200CO FLAT ELBOW N2 FIRE	72
KTC3200FP7E1	KT 5X3200CO FLAT ELBOW N1 FIRE	72
KTC3200FP7E2	KT 5X3200CO FLAT ELBOW N2 FIRE	72
KTC3200FT31A	KT 3X3200CO FEEDER LENGTH FIRE	70
KTC3200FT320	KT 3X3200CO FEEDER LENGTH FIRE 2M	70
KTC3200FT32B	KT 3X3200CO FEEDER LENGTH FIRE	70
KTC3200FT32C	KT 3X3200CO FEEDER LENGTH FIRE	70
KTC3200FT33D	KT 3X3200CO FEEDER LENGTH FIRE	70
KTC3200FT33E	KT 3X3200CO FEEDER LENGTH FIRE	70
KTC3200FT33F	KT 3X3200CO FEEDER LENGTH FIRE	70
KTC3200FT340	KT 3X3200CO FEEDER LENGTH FIRE 4M	70
KTC3200FT41A	KT 4X3200CO FEEDER LENGTH FIRE	70
KTC3200FT420	KT 4X3200CO FEEDER LENGTH FIRE 2M	70
KTC3200FT42B	KT 4X3200CO FEEDER LENGTH FIRE	70
KTC3200FT42C	KT 4X3200CO FEEDER LENGTH FIRE	70
KTC3200FT43D	KT 4X3200CO FEEDER LENGTH FIRE	70
KTC3200FT43E	KT 4X3200CO FEEDER LENGTH FIRE	70
KTC3200FT43F	KT 4X3200CO FEEDER LENGTH FIRE	70
KTC3200FT440	KT 4X3200CO FEEDER LENGTH FIRE 4M	70
KTC3200FT51A	KT 5X3200CO FEEDER LENGTH FIRE	70
KTC3200FT520	KT 5X3200CO FEEDER LENGTH FIRE 2M	70
KTC3200FT52B	KT 5X3200CO FEEDER LENGTH FIRE	70
KTC3200FT52C	KT 5X3200CO FEEDER LENGTH FIRE	70
KTC3200FT53D	KT 5X3200CO FEEDER LENGTH FIRE	70
KTC3200FT53E	KT 5X3200CO FEEDER LENGTH FIRE	70
KTC3200FT53F	KT 5X3200CO FEEDER LENGTH FIRE	70
KTC3200FT540	KT 5X3200CO FEEDER LENGTH FIRE 4M	70
KTC3200FT71A	KT 5X3200CO FEEDER LENGTH FIRE	70
KTC3200FT720	KT 5X3200CO FEEDER LENGTH FIRE 2M	70
KTC3200FT72B	KT 5X3200CO FEEDER LENGTH FIRE	70
KTC3200FT72C	KT 5X3200CO FEEDER LENGTH FIRE	70
KTC3200FT73D	KT 5X3200CO FEEDER LENGTH FIRE	70
KTC3200FT73E	KT 5X3200CO FEEDER LENGTH FIRE	70
KTC3200FT73F	KT 5X3200CO FEEDER LENGTH FIRE	70
KTC3200FT740	KT 5X3200CO FEEDER LENGTH FIRE 4M	70
KTC3200LC3A	KT 3X3200CO EDGEWISE ELBOW	61
KTC3200LC3B	KT 3X3200CO EDGEWISE ELBOW	61
KTC3200LC3D	KT 3X3200CO EDGEWISE ELBOW	61
KTC3200LC3E	KT 3X3200CO EDGEWISE ELBOW	61
KTC3200LC4A	KT 4X3200CO EDGEWISE ELBOW	61
KTC3200LC4B	KT 4X3200CO EDGEWISE ELBOW	61
KTC3200LC4D	KT 4X3200CO EDGEWISE ELBOW	61
KTC3200LC4E	KT 4X3200CO EDGEWISE ELBOW	61
KTC3200LC5A	KT 5X3200CO EDGEWISE ELBOW	61
KTC3200LC5B	KT 5X3200CO EDGEWISE ELBOW	61
KTC3200LC5D	KT 5X3200CO EDGEWISE ELBOW	61
KTC3200LC5E	KT 5X3200CO EDGEWISE ELBOW	61
KTC3200LC7A	KT 5X3200CO EDGEWISE ELBOW	61
KTC3200LC7B	KT 5X3200CO EDGEWISE ELBOW	61
KTC3200LC7D	KT 5X3200CO EDGEWISE ELBOW	61
KTC3200LC7E	KT 5X3200CO EDGEWISE ELBOW	61
KTC3200LP3A1	KT 3X3200CO FLAT ELBOW N1	60
KTC3200LP3A2	KT 3X3200CO FLAT ELBOW N2	60
KTC3200LP3B1	KT 3X3200CO FLAT ELBOW N1	60
KTC3200LP3B2	KT 3X3200CO FLAT ELBOW N2	60
KTC3200LP3C1	KT 3X3200CO FLAT ELBOW N1	61

Cat. no.	Designations	Pages
KTC3200LP3C2	KT 3X3200CO FLAT ELBOW N2	61
KTC3200LP3D1	KT 3X3200CO FLAT ELBOW N1	60
KTC3200LP3D2	KT 3X3200CO FLAT ELBOW N2	60
KTC3200LP3E1	KT 3X3200CO FLAT ELBOW N1	60
KTC3200LP3E2	KT 3X3200CO FLAT ELBOW N2	60
KTC3200LP4A1	KT 4X3200CO FLAT ELBOW N1	60
KTC3200LP4A2	KT 4X3200CO FLAT ELBOW N2	60
KTC3200LP4B1	KT 4X3200CO FLAT ELBOW N1	60
KTC3200LP4B2	KT 4X3200CO FLAT ELBOW N2	60
KTC3200LP4C1	KT 4X3200CO FLAT ELBOW N1	61
KTC3200LP4C2	KT 4X3200CO FLAT ELBOW N2	61
KTC3200LP4D1	KT 4X3200CO FLAT ELBOW N1	60
KTC3200LP4D2	KT 4X3200CO FLAT ELBOW N2	60
KTC3200LP4E1	KT 4X3200CO FLAT ELBOW N1	60
KTC3200LP4E2	KT 4X3200CO FLAT ELBOW N2	60
KTC3200LP5A1	KT 5X3200CO FLAT ELBOW N1	60
KTC3200LP5A2	KT 5X3200CO FLAT ELBOW N2	60
KTC3200LP5B1	KT 5X3200CO FLAT ELBOW N1	60
KTC3200LP5B2	KT 5X3200CO FLAT ELBOW N2	60
KTC3200LP5C1	KT 5X3200CO FLAT ELBOW N1	61
KTC3200LP5C2	KT 5X3200CO FLAT ELBOW N2	61
KTC3200LP5D1	KT 5X3200CO FLAT ELBOW N1	60
KTC3200LP5D2	KT 5X3200CO FLAT ELBOW N2	60
KTC3200LP5E1	KT 5X3200CO FLAT ELBOW N1	60
KTC3200LP5E2	KT 5X3200CO FLAT ELBOW N2	60
KTC3200LP7A1	KT 5X3200CO FLAT ELBOW N1	60
KTC3200LP7A2	KT 5X3200CO FLAT ELBOW N2	60
KTC3200LP7B1	KT 5X3200CO FLAT ELBOW N1	60
KTC3200LP7B2	KT 5X3200CO FLAT ELBOW N2	60
KTC3200LP7C1	KT 5X3200CO FLAT ELBOW N1	61
KTC3200LP7C2	KT 5X3200CO FLAT ELBOW N2	61
KTC3200LP7D1	KT 5X3200CO FLAT ELBOW N1	60
KTC3200LP7D2	KT 5X3200CO FLAT ELBOW N2	60
KTC3200LP7E1	KT 5X3200CO FLAT ELBOW N1	60
KTC3200LP7E2	KT 5X3200CO FLAT ELBOW N2	60
KTC3200SL31	KT 3X3200CO ISOLATOR UNIT NW	126
KTC3200SL41	KT 4X3200CO ISOLATOR UNIT NW	126
KTC3200SL51	KT 5X3200CO ISOLATOR UNIT NW	126
KTC3200SL71	KT 5X3200CO ISOLATOR UNIT NW	126
KTC3200TC3	KT 3X3200CO TEE ON EDGE	65
KTC3200TC4	KT 4X3200CO TEE ON EDGE	65
KTC3200TC5	KT 5X3200CO TEE ON EDGE	65
KTC3200TC7	KT 5X3200CO TEE ON EDGE	65
KTC3200TN410	KT 4X3200CO NEUTRAL PERMUTA	56
KTC3200TP410	KT 4X3200CO PHASES PERMUTA	56
KTC3200YA3	KT 3X3200CO JUNCTION BLOC	58
KTC3200YA4	KT 4X3200CO JUNCTION BLOC	58
KTC3200YA5	KT 5X3200CO JUNCTION BLOC	58
KTC3200YA7	KT 5X3200CO JUNCTION BLOC	58
KTC3200ZC31	KT 3X3200CO EDGEWISE ZED N1	66
KTC3200ZC32	KT 3X3200CO EDGEWISE ZED N2	66
KTC3200ZC41	KT 4X3200CO EDGEWISE ZED N1	66
KTC3200ZC42	KT 4X3200CO EDGEWISE ZED N2	66
KTC3200ZC51	KT 5X3200CO EDGEWISE ZED N1	66
KTC3200ZC52	KT 5X3200CO EDGEWISE ZED N2	66
KTC3200ZC71	KT 5X3200CO EDGEWISE ZED N1	66
KTC3200ZC72	KT 5X3200CO EDGEWISE ZED N2	66
KTC3200ZP3	KT 3X3200CO ZED ON FLAT	66
KTC3200ZP4	KT 4X3200CO ZED ON FLAT	66
KTC3200ZP5	KT 5X3200CO ZED ON FLAT	66
KTC3200ZP7	KT 5X3200CO ZED ON FLAT	66

Index of catalogue numbers

Cat. no.	Designations	Pages
KTC4000		
KTC4000CP31	KT 3X4000CO FLAT EDGEWISE N1	68
KTC4000CP32	KT 3X4000CO FLAT EDGEWISE N2	68
KTC4000CP33	KT 3X4000CO FLAT EDGEWISE N3	68
KTC4000CP34	KT 3X4000CO FLAT EDGEWISE N4	68
KTC4000CP41	KT 4X4000CO FLAT EDGEWISE N1	68
KTC4000CP42	KT 4X4000CO FLAT EDGEWISE N2	68
KTC4000CP43	KT 4X4000CO FLAT EDGEWISE N3	68
KTC4000CP44	KT 4X4000CO FLAT EDGEWISE N4	68
KTC4000CP51	KT 5X4000CO FLAT EDGEWISE N1	68
KTC4000CP52	KT 5X4000CO FLAT EDGEWISE N2	68
KTC4000CP53	KT 5X4000CO FLAT EDGEWISE N3	68
KTC4000CP54	KT 5X4000CO FLAT EDGEWISE N4	68
KTC4000CP71	KT 5X4000CO FLAT EDGEWISE N1	68
KTC4000CP72	KT 5X4000CO FLAT EDGEWISE N2	68
KTC4000CP73	KT 5X4000CO FLAT EDGEWISE N3	68
KTC4000CP74	KT 5X4000CO FLAT EDGEWISE N4	68
KTC4000DB310	KT 3X4000CO EXPANSION UNIT	56
KTC4000DB410	KT 4X4000CO EXPANSION UNIT	56
KTC4000DB510	KT 5X4000CO EXPANSION UNIT	56
KTC4000DB710	KT 5X4000CO EXPANSION UNIT	56
KTC4000EB320	KT 3X4000CO BOLT ON LENGTH 2M	52
KTC4000EB340	KT 3X4000CO BOLT ON LENGTH 4M	52
KTC4000EB420	KT 4X4000CO BOLT ON LENGTH 2M	52
KTC4000EB440	KT 4X4000CO BOLT ON LENGTH 4M	52
KTC4000EB520	KT 5X4000CO BOLT ON LENGTH 2M	52
KTC4000EB540	KT 5X4000CO BOLT ON LENGTH 4M	52
KTC4000EB720	KT 5X4000CO BOLT ON LENGTH 2M	52
KTC4000EB740	KT 5X4000CO BOLT ON LENGTH 4M	52
KTC4000ED3201	KT 1X4000CO PLUG-IN LENGTH 2M	50
KTC4000ED3203	KT 3X4000CO PLUG-IN LENGTH 2M	50
KTC4000ED3301	KT 1X4000CO PLUG-IN LENGTH	50
KTC4000ED3302	KT 2X4000CO PLUG-IN LENGTH	50
KTC4000ED3351	KT 1X4000CO PLUG-IN LENGTH	50
KTC4000ED3353	KT 3X4000CO PLUG-IN LENGTH	50
KTC4000ED3403	KT 3X4000CO PLUG-IN LENGTH 4M	50
KTC4000ED4201	KT 1X4000CO PLUG-IN LENGTH 2M	50
KTC4000ED4203	KT 4X4000CO PLUG-IN LENGTH 2M	50
KTC4000ED4301	KT 1X4000CO PLUG-IN LENGTH	50
KTC4000ED4302	KT 2X4000CO PLUG-IN LENGTH	50
KTC4000ED4351	KT 1X4000CO PLUG-IN LENGTH	50
KTC4000ED4353	KT 3X4000CO PLUG-IN LENGTH	50
KTC4000ED4403	KT 4X4000CO PLUG-IN LENGTH 4M	50
KTC4000ED5201	KT 1X4000CO PLUG-IN LENGTH 2M	50
KTC4000ED5203	KT 5X4000CO PLUG-IN LENGTH 2M	50
KTC4000ED5301	KT 1X4000CO PLUG-IN LENGTH	50
KTC4000ED5302	KT 2X4000CO PLUG-IN LENGTH	50
KTC4000ED5351	KT 1X4000CO PLUG-IN LENGTH	50
KTC4000ED5353	KT 3X4000CO PLUG-IN LENGTH	50
KTC4000ED5403	KT 5X4000CO PLUG-IN LENGTH 4M	50
KTC4000ED7201	KT 1X4000CO PLUG-IN LENGTH 2M	50
KTC4000ED7203	KT 5X4000CO PLUG-IN LENGTH 2M	50
KTC4000ED7301	KT 1X4000CO PLUG-IN LENGTH	50
KTC4000ED7302	KT 2X4000CO PLUG-IN LENGTH	50
KTC4000ED7351	KT 1X4000CO PLUG-IN LENGTH	50
KTC4000ED7353	KT 3X4000CO PLUG-IN LENGTH	50
KTC4000ED7403	KT 5X4000CO PLUG-IN LENGTH 4M	50
KTC4000EH320	KT 3X4000CO KH PLUG-IN LENGTH 2M	53
KTC4000EH340	KT 3X4000CO KH PLUG-IN LENGTH 4M	53
KTC4000EH420	KT 4X4000CO KH PLUG-IN LENGTH 2M	53
KTC4000EH440	KT 4X4000CO KH PLUG-IN LENGTH 4M	53
KTC4000EH520	KT 5X4000CO KH PLUG-IN LENGTH 2M	53
KTC4000EH540	KT 5X4000CO KH PLUG-IN LENGTH 4M	53
KTC4000EH720	KT 5X4000CO KH PLUG-IN LENGTH 2M	53
KTC4000EH740	KT 5X4000CO KH PLUG-IN LENGTH 4M	53

Cat. no.	Designations	Pages
KTC4000EL31	KT 3X4000CO FEED UNIT EL N1	92
KTC4000EL32	KT 3X4000CO FEED UNIT EL N2	92
KTC4000EL33	KT 3X4000CO FEED UNIT EL N3	94
KTC4000EL34	KT 3X4000CO FEED UNIT EL N4	94
KTC4000EL35	KT 3X4000CO FEED UNIT EL N5	95
KTC4000EL41	KT 4X4000CO FEED UNIT EL N1	92
KTC4000EL42	KT 4X4000CO FEED UNIT EL N2	92
KTC4000EL43	KT 4X4000CO FEED UNIT EL N3	94
KTC4000EL44	KT 4X4000CO FEED UNIT EL N4	94
KTC4000EL45	KT 4X4000CO FEED UNIT EL N5	95
KTC4000EL51	KT 5X4000CO FEED UNIT EL N1	92
KTC4000EL52	KT 5X4000CO FEED UNIT EL N2	92
KTC4000EL53	KT 5X4000CO FEED UNIT EL N3	94
KTC4000EL54	KT 5X4000CO FEED UNIT EL N4	94
KTC4000EL55	KT 5X4000CO FEED UNIT EL N5	95
KTC4000EL71	KT 5X4000CO FEED UNIT EL N1	92
KTC4000EL72	KT 5X4000CO FEED UNIT EL N2	92
KTC4000EL73	KT 5X4000CO FEED UNIT EL N3	94
KTC4000EL74	KT 5X4000CO FEED UNIT EL N4	94
KTC4000EL75	KT 5X4000CO FEED UNIT EL N5	95
KTC4000ER31	KT 3X4000CO FEED UNIT ER N1	79
KTC4000ER32	KT 3X4000CO FEED UNIT ER N2	79
KTC4000ER33	KT 3X4000CO FEED UNIT ER N3	80
KTC4000ER34	KT 3X4000CO FEED UNIT ER N4	80
KTC4000ER35	KT 3X4000CO FEED UNIT ER N5	81
KTC4000ER36	KT 3X4000CO FEED UNIT ER N6	81
KTC4000ER37	KT 3X4000CO FEED UNIT ER N7	85
KTC4000ER41	KT 4X4000CO FEED UNIT ER N1	79
KTC4000ER42	KT 4X4000CO FEED UNIT ER N2	79
KTC4000ER43	KT 4X4000CO FEED UNIT ER N3	80
KTC4000ER44	KT 4X4000CO FEED UNIT ER N4	80
KTC4000ER45	KT 4X4000CO FEED UNIT ER N5	81
KTC4000ER46	KT 4X4000CO FEED UNIT ER N6	81
KTC4000ER47	KT 4X4000CO FEED UNIT ER N7	85
KTC4000ER51	KT 5X4000CO FEED UNIT ER N1	79
KTC4000ER52	KT 5X4000CO FEED UNIT ER N2	79
KTC4000ER53	KT 5X4000CO FEED UNIT ER N3	80
KTC4000ER54	KT 5X4000CO FEED UNIT ER N4	80
KTC4000ER55	KT 5X4000CO FEED UNIT ER N5	81
KTC4000ER56	KT 5X4000CO FEED UNIT ER N6	81
KTC4000ER57	KT 5X4000CO FEED UNIT ER N7	85
KTC4000ER71	KT 5X4000CO FEED UNIT ER N1	79
KTC4000ER72	KT 5X4000CO FEED UNIT ER N2	79
KTC4000ER73	KT 5X4000CO FEED UNIT ER N3	80
KTC4000ER74	KT 5X4000CO FEED UNIT ER N4	80
KTC4000ER75	KT 5X4000CO FEED UNIT ER N5	81
KTC4000ER76	KT 5X4000CO FEED UNIT ER N6	81
KTC4000ER77	KT 5X4000CO FEED UNIT ER N7	85
KTC4000ET31A	KT 3X4000CO FEEDER LENGTH	50
KTC4000ET320	KT 3X4000CO FEEDER LENGTH 2M	50
KTC4000ET32B	KT 3X4000CO FEEDER LENGTH	50
KTC4000ET32C	KT 3X4000CO FEEDER LENGTH	50
KTC4000ET33D	KT 3X4000CO FEEDER LENGTH	50
KTC4000ET33E	KT 3X4000CO FEEDER LENGTH	50
KTC4000ET33F	KT 3X4000CO FEEDER LENGTH	50
KTC4000ET340	KT 3X4000CO FEEDER LENGTH 4M	50
KTC4000ET41A	KT 4X4000CO FEEDER LENGTH	50
KTC4000ET420	KT 4X4000CO FEEDER LENGTH 2M	50
KTC4000ET42B	KT 4X4000CO FEEDER LENGTH	50
KTC4000ET42C	KT 4X4000CO FEEDER LENGTH	50
KTC4000ET43D	KT 4X4000CO FEEDER LENGTH	50
KTC4000ET43E	KT 4X4000CO FEEDER LENGTH	50
KTC4000ET43F	KT 4X4000CO FEEDER LENGTH	50
KTC4000ET440	KT 4X4000CO FEEDER LENGTH 4M	50

Index of catalogue numbers

Cat. no.	Designations	Pages
KTC4000ET51A	KT 5X4000CO FEEDER LENGTH	50
KTC4000ET520	KT 5X4000CO FEEDER LENGTH 2M	50
KTC4000ET52B	KT 5X4000CO FEEDER LENGTH	50
KTC4000ET52C	KT 5X4000CO FEEDER LENGTH	50
KTC4000ET53D	KT 5X4000CO FEEDER LENGTH	50
KTC4000ET53E	KT 5X4000CO FEEDER LENGTH	50
KTC4000ET53F	KT 5X4000CO FEEDER LENGTH	50
KTC4000ET540	KT 5X4000CO FEEDER LENGTH 4M	50
KTC4000ET71A	KT 5X4000CO FEEDER LENGTH	50
KTC4000ET720	KT 5X4000CO FEEDER LENGTH 2M	50
KTC4000ET72B	KT 5X4000CO FEEDER LENGTH	50
KTC4000ET72C	KT 5X4000CO FEEDER LENGTH	50
KTC4000ET73D	KT 5X4000CO FEEDER LENGTH	50
KTC4000ET73E	KT 5X4000CO FEEDER LENGTH	50
KTC4000ET73F	KT 5X4000CO FEEDER LENGTH	50
KTC4000ET740	KT 5X4000CO FEEDER LENGTH 4M	50
KTC4000FC3A	KT 3X4000CO EDGEWISE ELBOW	73
KTC4000FC3B	KT 3X4000CO EDGEWISE ELBOW	73
KTC4000FC3D	KT 3X4000CO EDGEWISE ELBOW	73
KTC4000FC3E	KT 3X4000CO EDGEWISE ELBOW	73
KTC4000FC4A	KT 4X4000CO EDGEWISE ELBOW	73
KTC4000FC4B	KT 4X4000CO EDGEWISE ELBOW	73
KTC4000FC4D	KT 4X4000CO EDGEWISE ELBOW	73
KTC4000FC4E	KT 4X4000CO EDGEWISE ELBOW	73
KTC4000FC5A	KT 5X4000CO EDGEWISE ELBOW	73
KTC4000FC5B	KT 5X4000CO EDGEWISE ELBOW	73
KTC4000FC5D	KT 5X4000CO EDGEWISE ELBOW	73
KTC4000FC5E	KT 5X4000CO EDGEWISE ELBOW	73
KTC4000FC7A	KT 5X4000CO EDGEWISE ELBOW	73
KTC4000FC7B	KT 5X4000CO EDGEWISE ELBOW	73
KTC4000FC7D	KT 5X4000CO EDGEWISE ELBOW	73
KTC4000FC7E	KT 5X4000CO EDGEWISE ELBOW	73
KTC4000FJ3	KT 3X4000CU JUNCTION BLOC FIRE RATED	71
KTC4000FJ4	KT 4X4000CU JUNCTION BLOC FIRE RATED	71
KTC4000FJ5	KT 5X4000CU JUNCTION BLOC FIRE RATED	71
KTC4000FJ7	KT 5X4000CU JUNCTION BLOC FIRE RATED	71
KTC4000FP3A1	KT 3X4000CO FLAT ELBOW N1 FIRE	72
KTC4000FP3A2	KT 3X4000CO FLAT ELBOW N2 FIRE	72
KTC4000FP3B1	KT 3X4000CO FLAT ELBOW N1 FIRE	72
KTC4000FP3B2	KT 3X4000CO FLAT ELBOW N2 FIRE	72
KTC4000FP3D1	KT 3X4000CO FLAT ELBOW N1 FIRE	72
KTC4000FP3D2	KT 3X4000CO FLAT ELBOW N2 FIRE	72
KTC4000FP3E1	KT 3X4000CO FLAT ELBOW N1 FIRE	72
KTC4000FP3E2	KT 3X4000CO FLAT ELBOW N2 FIRE	72
KTC4000FP4A1	KT 4X4000CO FLAT ELBOW N1 FIRE	72
KTC4000FP4A2	KT 4X4000CO FLAT ELBOW N2 FIRE	72
KTC4000FP4B1	KT 4X4000CO FLAT ELBOW N1 FIRE	72
KTC4000FP4B2	KT 4X4000CO FLAT ELBOW N2 FIRE	72
KTC4000FP4D1	KT 4X4000CO FLAT ELBOW N1 FIRE	72
KTC4000FP4D2	KT 4X4000CO FLAT ELBOW N2 FIRE	72
KTC4000FP4E1	KT 4X4000CO FLAT ELBOW N1 FIRE	72
KTC4000FP4E2	KT 4X4000CO FLAT ELBOW N2 FIRE	72
KTC4000FP5A1	KT 5X4000CO FLAT ELBOW N1 FIRE	72
KTC4000FP5A2	KT 5X4000CO FLAT ELBOW N2 FIRE	72
KTC4000FP5B1	KT 5X4000CO FLAT ELBOW N1 FIRE	72
KTC4000FP5B2	KT 5X4000CO FLAT ELBOW N2 FIRE	72
KTC4000FP5D1	KT 5X4000CO FLAT ELBOW N1 FIRE	72
KTC4000FP5D2	KT 5X4000CO FLAT ELBOW N2 FIRE	72
KTC4000FP5E1	KT 5X4000CO FLAT ELBOW N1 FIRE	72
KTC4000FP5E2	KT 5X4000CO FLAT ELBOW N2 FIRE	72
KTC4000FP7A1	KT 5X4000CO FLAT ELBOW N1 FIRE	72
KTC4000FP7A2	KT 5X4000CO FLAT ELBOW N2 FIRE	72
KTC4000FP7B1	KT 5X4000CO FLAT ELBOW N1 FIRE	72
KTC4000FP7B2	KT 5X4000CO FLAT ELBOW N2 FIRE	72

Cat. no.	Designations	Pages
KTC4000FP7D1	KT 5X4000CO FLAT ELBOW N1 FIRE	72
KTC4000FP7D2	KT 5X4000CO FLAT ELBOW N2 FIRE	72
KTC4000FP7E1	KT 5X4000CO FLAT ELBOW N1 FIRE	72
KTC4000FP7E2	KT 5X4000CO FLAT ELBOW N2 FIRE	72
KTC4000FT31A	KT 3X4000CO FEEDER LENGTH FIRE	70
KTC4000FT320	KT 3X4000CO FEEDER LENGTH FIRE 2M	70
KTC4000FT32B	KT 3X4000CO FEEDER LENGTH FIRE	70
KTC4000FT32C	KT 3X4000CO FEEDER LENGTH FIRE	70
KTC4000FT33D	KT 3X4000CO FEEDER LENGTH FIRE	70
KTC4000FT33E	KT 3X4000CO FEEDER LENGTH FIRE	70
KTC4000FT33F	KT 3X4000CO FEEDER LENGTH FIRE	70
KTC4000FT340	KT 3X4000CO FEEDER LENGTH FIRE 4M	70
KTC4000FT41A	KT 4X4000CO FEEDER LENGTH FIRE	70
KTC4000FT420	KT 4X4000CO FEEDER LENGTH FIRE 2M	70
KTC4000FT42B	KT 4X4000CO FEEDER LENGTH FIRE	70
KTC4000FT42C	KT 4X4000CO FEEDER LENGTH FIRE	70
KTC4000FT43D	KT 4X4000CO FEEDER LENGTH FIRE	70
KTC4000FT43E	KT 4X4000CO FEEDER LENGTH FIRE	70
KTC4000FT43F	KT 4X4000CO FEEDER LENGTH FIRE	70
KTC4000FT440	KT 4X4000CO FEEDER LENGTH FIRE 4M	70
KTC4000FT51A	KT 5X4000CO FEEDER LENGTH FIRE	70
KTC4000FT520	KT 5X4000CO FEEDER LENGTH FIRE 2M	70
KTC4000FT52B	KT 5X4000CO FEEDER LENGTH FIRE	70
KTC4000FT52C	KT 5X4000CO FEEDER LENGTH FIRE	70
KTC4000FT53D	KT 5X4000CO FEEDER LENGTH FIRE	70
KTC4000FT53E	KT 5X4000CO FEEDER LENGTH FIRE	70
KTC4000FT53F	KT 5X4000CO FEEDER LENGTH FIRE	70
KTC4000FT540	KT 5X4000CO FEEDER LENGTH FIRE 4M	70
KTC4000FT71A	KT 5X4000CO FEEDER LENGTH FIRE	70
KTC4000FT720	KT 5X4000CO FEEDER LENGTH FIRE 2M	70
KTC4000FT72B	KT 5X4000CO FEEDER LENGTH FIRE	70
KTC4000FT72C	KT 5X4000CO FEEDER LENGTH FIRE	70
KTC4000FT73D	KT 5X4000CO FEEDER LENGTH FIRE	70
KTC4000FT73E	KT 5X4000CO FEEDER LENGTH FIRE	70
KTC4000FT73F	KT 5X4000CO FEEDER LENGTH FIRE	70
KTC4000FT740	KT 5X4000CO FEEDER LENGTH FIRE 4M	70
KTC4000LC3A	KT 3X4000CO EDGEWISE ELBOW	61
KTC4000LC3B	KT 3X4000CO EDGEWISE ELBOW	61
KTC4000LC3D	KT 3X4000CO EDGEWISE ELBOW	61
KTC4000LC3E	KT 3X4000CO EDGEWISE ELBOW	61
KTC4000LC4A	KT 4X4000CO EDGEWISE ELBOW	61
KTC4000LC4B	KT 4X4000CO EDGEWISE ELBOW	61
KTC4000LC4D	KT 4X4000CO EDGEWISE ELBOW	61
KTC4000LC4E	KT 4X4000CO EDGEWISE ELBOW	61
KTC4000LC5A	KT 5X4000CO EDGEWISE ELBOW	61
KTC4000LC5B	KT 5X4000CO EDGEWISE ELBOW	61
KTC4000LC4D	KT 4X4000CO EDGEWISE ELBOW	61
KTC4000LC4E	KT 4X4000CO EDGEWISE ELBOW	61
KTC4000LC7A	KT 5X4000CO EDGEWISE ELBOW	61
KTC4000LC7B	KT 5X4000CO EDGEWISE ELBOW	61
KTC4000LC7D	KT 5X4000CO EDGEWISE ELBOW	61
KTC4000LC7E	KT 5X4000CO EDGEWISE ELBOW	61
KTC4000LP3A1	KT 3X4000CO FLAT ELBOW N1	60
KTC4000LP3A2	KT 3X4000CO FLAT ELBOW N2	60
KTC4000LP3B1	KT 3X4000CO FLAT ELBOW N1	60
KTC4000LP3B2	KT 3X4000CO FLAT ELBOW N2	60
KTC4000LP3C1	KT 3X4000CO FLAT ELBOW N1	61
KTC4000LP3C2	KT 3X4000CO FLAT ELBOW N2	61
KTC4000LP3D1	KT 3X4000CO FLAT ELBOW N1	60
KTC4000LP3D2	KT 3X4000CO FLAT ELBOW N2	60
KTC4000LP3E1	KT 3X4000CO FLAT ELBOW N1	60
KTC4000LP3E2	KT 3X4000CO FLAT ELBOW N2	60
KTC4000LP4A1	KT 4X4000CO FLAT ELBOW N1	60
KTC4000LP4A2	KT 4X4000CO FLAT ELBOW N2	60

Index of catalogue numbers

Cat. no.	Designations	Pages
KTC4000LP4B1	KT 4X4000CO FLAT ELBOW N1	60
KTC4000LP4B2	KT 4X4000CO FLAT ELBOW N2	60
KTC4000LP4C1	KT 4X4000CO FLAT ELBOW N1	61
KTC4000LP4C2	KT 4X4000CO FLAT ELBOW N2	61
KTC4000LP4D1	KT 4X4000CO FLAT ELBOW N1	60
KTC4000LP4D2	KT 4X4000CO FLAT ELBOW N2	60
KTC4000LP4E1	KT 4X4000CO FLAT ELBOW N1	60
KTC4000LP4E2	KT 4X4000CO FLAT ELBOW N2	60
KTC4000LP5A1	KT 5X4000CO FLAT ELBOW N1	60
KTC4000LP5A2	KT 5X4000CO FLAT ELBOW N2	60
KTC4000LP5B1	KT 5X4000CO FLAT ELBOW N1	60
KTC4000LP5B2	KT 5X4000CO FLAT ELBOW N2	60
KTC4000LP5C1	KT 5X4000CO FLAT ELBOW N1	61
KTC4000LP5C2	KT 5X4000CO FLAT ELBOW N2	61
KTC4000LP5D1	KT 5X4000CO FLAT ELBOW N1	60
KTC4000LP5D2	KT 5X4000CO FLAT ELBOW N2	60
KTC4000LP5E1	KT 5X4000CO FLAT ELBOW N1	60
KTC4000LP5E2	KT 5X4000CO FLAT ELBOW N2	60
KTC4000LP7A1	KT 5X4000CO FLAT ELBOW N1	60
KTC4000LP7A2	KT 5X4000CO FLAT ELBOW N2	60
KTC4000LP7B1	KT 5X4000CO FLAT ELBOW N1	60
KTC4000LP7B2	KT 5X4000CO FLAT ELBOW N2	60
KTC4000LP7C1	KT 5X4000CO FLAT ELBOW N1	61
KTC4000LP7C2	KT 5X4000CO FLAT ELBOW N2	61
KTC4000LP7D1	KT 5X4000CO FLAT ELBOW N1	60
KTC4000LP7D2	KT 5X4000CO FLAT ELBOW N2	60
KTC4000LP7E1	KT 5X4000CO FLAT ELBOW N1	60
KTC4000LP7E2	KT 5X4000CO FLAT ELBOW N2	60
KTC4000TC3	KT 3X4000CO TEE ON EDGE	65
KTC4000TC4	KT 4X4000CO TEE ON EDGE	65
KTC4000TC5	KT 5X4000CO TEE ON EDGE	65
KTC4000TC7	KT 5X4000CO TEE ON EDGE	65
KTC4000TN410	KT 4X4000CO NEUTRAL PERMUTA	56
KTC4000TP410	KT 4X4000CO PHASES PERMUTA	56
KTC4000YA3	KT 3X4000CO JUNCTION BLOC	58
KTC4000YA4	KT 4X4000CO JUNCTION BLOC	58
KTC4000YA5	KT 5X4000CO JUNCTION BLOC	58
KTC4000YA7	KT 5X4000CO JUNCTION BLOC	58
KTC4000ZC31	KT 3X4000CO EDGEWISE ZED N1	66
KTC4000ZC32	KT 3X4000CO EDGEWISE ZED N2	66
KTC4000ZC41	KT 4X4000CO EDGEWISE ZED N1	66
KTC4000ZC42	KT 4X4000CO EDGEWISE ZED N2	66
KTC4000ZC51	KT 5X4000CO EDGEWISE ZED N1	66
KTC4000ZC52	KT 5X4000CO EDGEWISE ZED N2	66
KTC4000ZC71	KT 5X4000CO EDGEWISE ZED N1	66
KTC4000ZC72	KT 5X4000CO EDGEWISE ZED N2	66
KTC4000ZP3	KT 3X4000CO ZED ON FLAT	66
KTC4000ZP4	KT 4X4000CO ZED ON FLAT	66
KTC4000ZP5	KT 5X4000CO ZED ON FLAT	66
KTC4000ZP7	KT 5X4000CO ZED ON FLAT	66

KTC5000

KTC5000CP31	KT 3X5000CO FLAT EDGEWISE N1	68
KTC5000CP32	KT 3X5000CO FLAT EDGEWISE N2	68
KTC5000CP33	KT 3X5000CO FLAT EDGEWISE N3	68
KTC5000CP34	KT 3X5000CO FLAT EDGEWISE N4	68
KTC5000CP41	KT 4X5000CO FLAT EDGEWISE N1	68
KTC5000CP42	KT 4X5000CO FLAT EDGEWISE N2	68
KTC5000CP43	KT 4X5000CO FLAT EDGEWISE N3	68
KTC5000CP44	KT 4X5000CO FLAT EDGEWISE N4	68
KTC5000CP51	KT 5X5000CO FLAT EDGEWISE N1	68
KTC5000CP52	KT 5X5000CO FLAT EDGEWISE N2	68
KTC5000CP53	KT 5X5000CO FLAT EDGEWISE N3	68
KTC5000CP54	KT 5X5000CO FLAT EDGEWISE N4	68

Cat. no.	Designations	Pages
KTC5000CP71	KT 5X5000CO FLAT EDGEWISE N1	68
KTC5000CP72	KT 5X5000CO FLAT EDGEWISE N2	68
KTC5000CP73	KT 5X5000CO FLAT EDGEWISE N3	68
KTC5000CP74	KT 5X5000CO FLAT EDGEWISE N4	68
KTC5000DB310	KT 3X5000CO EXPANSION UNIT	56
KTC5000DB410	KT 4X5000CO EXPANSION UNIT	56
KTC5000DB510	KT5X5000CO EXPANSION UNIT	56
KTC5000DB710	KT5X5000CO EXPANSION UNIT	56
KTC5000EB320	KT 3X5000CO BOLT ON LENGTH 2M	52
KTC5000EB340	KT 3X5000CO BOLT ON LENGTH 4M	52
KTC5000EB420	KT 4X5000CO BOLT ON LENGTH 2M	52
KTC5000EB440	KT 4X5000CO BOLT ON LENGTH 4M	52
KTC5000EB520	KT 5X5000CO BOLT ON LENGTH 2M	52
KTC5000EB540	KT 5X5000CO BOLT ON LENGTH 4M	52
KTC5000EB720	KT 5X5000CO BOLT ON LENGTH 2M	52
KTC5000EB740	KT 5X5000CO BOLT ON LENGTH 4M	52
KTC5000ED3201	KT 1X5000CO PLUG-IN LENGTH 2M	50
KTC5000ED3203	KT 3X5000CO PLUG-IN LENGTH 2M	50
KTC5000ED3301	KT 1X5000CO PLUG-IN LENGTH	50
KTC5000ED3302	KT 2X5000CO PLUG-IN LENGTH	50
KTC5000ED3351	KT 1X5000CO PLUG-IN LENGTH	50
KTC5000ED3353	KT 3X5000CO PLUG-IN LENGTH	50
KTC5000ED3403	KT 3X5000CO PLUG-IN LENGTH 4M	50
KTC5000ED4201	KT 1X5000CO PLUG-IN LENGTH 2M	50
KTC5000ED4203	KT 4X5000CO PLUG-IN LENGTH 2M	50
KTC5000ED4301	KT 1X5000CO PLUG-IN LENGTH	50
KTC5000ED4302	KT 2X5000CO PLUG-IN LENGTH	50
KTC5000ED4351	KT 1X5000CO PLUG-IN LENGTH	50
KTC5000ED4353	KT 3X5000CO PLUG-IN LENGTH	50
KTC5000ED4403	KT 4X5000CO PLUG-IN LENGTH 4M	50
KTC5000ED5201	KT 1X5000CO PLUG-IN LENGTH 2M	50
KTC5000ED5203	KT 5X5000CO PLUG-IN LENGTH 2M	50
KTC5000ED5301	KT 1X5000CO PLUG-IN LENGTH	50
KTC5000ED5302	KT 2X5000CO PLUG-IN LENGTH	50
KTC5000ED5351	KT 1X5000CO PLUG-IN LENGTH	50
KTC5000ED5353	KT 3X5000CO PLUG-IN LENGTH	50
KTC5000ED5403	KT 5X5000CO PLUG-IN LENGTH 4M	50
KTC5000ED7201	KT 1X5000CO PLUG-IN LENGTH 2M	50
KTC5000ED7203	KT 5X5000CO PLUG-IN LENGTH 2M	50
KTC5000ED7301	KT 1X5000CO PLUG-IN LENGTH	50
KTC5000ED7302	KT 2X5000CO PLUG-IN LENGTH	50
KTC5000ED7351	KT 1X5000CO PLUG-IN LENGTH	50
KTC5000ED7353	KT 3X5000CO PLUG-IN LENGTH	50
KTC5000ED7403	KT 5X5000CO PLUG-IN LENGTH 4M	50
KTC5000EH320	KT 3X5000CO KH PLUG-IN LENGTH 2M	53
KTC5000EH340	KT 3X5000CO KH PLUG-IN LENGTH 4M	53
KTC5000EH420	KT 4X5000CO KH PLUG-IN LENGTH 2M	53
KTC5000EH440	KT 4X5000CO KH PLUG-IN LENGTH 4M	53
KTC5000EH520	KT 5X5000CO KH PLUG-IN LENGTH 2M	53
KTC5000EH540	KT 5X5000CO KH PLUG-IN LENGTH 4M	53
KTC5000EH720	KT 5X5000CO KH PLUG-IN LENGTH 2M	53
KTC5000EH740	KT 5X5000CO KH PLUG-IN LENGTH 4M	53
KTC5000EL31	KT 3X5000CO FEED UNIT EL N1	92
KTC5000EL32	KT 3X5000CO FEED UNIT EL N2	92
KTC5000EL33	KT 3X5000CO FEED UNIT EL N3	94
KTC5000EL34	KT 3X5000CO FEED UNIT EL N4	94
KTC5000EL35	KT 3X5000CO FEED UNIT EL N5	95
KTC5000EL41	KT 4X5000CO FEED UNIT EL N1	92
KTC5000EL42	KT 4X5000CO FEED UNIT EL N2	92
KTC5000EL43	KT 4X5000CO FEED UNIT EL N3	94
KTC5000EL44	KT 4X5000CO FEED UNIT EL N4	94
KTC5000EL45	KT 4X5000CO FEED UNIT EL N5	95
KTC5000EL51	KT 5X5000CO FEED UNIT EL N1	92
KTC5000EL52	KT 5X5000CO FEED UNIT EL N2	92
KTC5000EL53	KT 5X5000CO FEED UNIT EL N3	94

Index of catalogue numbers

Cat. no.	Designations	Pages
KTC5000EL54	KT 5X5000CO FEED UNIT EL N4	94
KTC5000EL55	KT 5X5000CO FEED UNIT EL N5	95
KTC5000EL71	KT 5X5000CO FEED UNIT EL N1	92
KTC5000EL72	KT 5X5000CO FEED UNIT EL N2	92
KTC5000EL73	KT 5X5000CO FEED UNIT EL N3	94
KTC5000EL74	KT 5X5000CO FEED UNIT EL N4	94
KTC5000EL75	KT 5X5000CO FEED UNIT EL N5	95
KTC5000ER31	KT 3X5000CO FEED UNIT ER N1	79
KTC5000ER32	KT 3X5000CO FEED UNIT ER N2	79
KTC5000ER33	KT 3X5000CO FEED UNIT ER N3	80
KTC5000ER34	KT 3X5000CO FEED UNIT ER N4	80
KTC5000ER35	KT 3X5000CO FEED UNIT ER N5	81
KTC5000ER36	KT 3X5000CO FEED UNIT ER N6	81
KTC5000ER37	KT 3X5000CO FEED UNIT ER N7	85
KTC5000ER41	KT 4X5000CO FEED UNIT ER N1	79
KTC5000ER42	KT 4X5000CO FEED UNIT ER N2	79
KTC5000ER43	KT 4X5000CO FEED UNIT ER N3	80
KTC5000ER44	KT 4X5000CO FEED UNIT ER N4	80
KTC5000ER45	KT 4X5000CO FEED UNIT ER N5	81
KTC5000ER46	KT 4X5000CO FEED UNIT ER N6	81
KTC5000ER47	KT 4X5000CO FEED UNIT ER N7	85
KTC5000ER51	KT 5X5000CO FEED UNIT ER N1	79
KTC5000ER52	KT 5X5000CO FEED UNIT ER N2	79
KTC5000ER53	KT 5X5000CO FEED UNIT ER N3	80
KTC5000ER54	KT 5X5000CO FEED UNIT ER N4	80
KTC5000ER55	KT 5X5000CO FEED UNIT ER N5	81
KTC5000ER56	KT 5X5000CO FEED UNIT ER N6	81
KTC5000ER57	KT 5X5000CO FEED UNIT ER N7	85
KTC5000ER71	KT 5X5000CO FEED UNIT ER N1	79
KTC5000ER72	KT 5X5000CO FEED UNIT ER N2	79
KTC5000ER73	KT 5X5000CO FEED UNIT ER N3	80
KTC5000ER74	KT 5X5000CO FEED UNIT ER N4	80
KTC5000ER75	KT 5X5000CO FEED UNIT ER N5	81
KTC5000ER76	KT 5X5000CO FEED UNIT ER N6	81
KTC5000ER77	KT 5X5000CO FEED UNIT ER N7	85
KTC5000ET31A	KT 3X5000CO FEEDER LENGTH	50
KTC5000ET320	KT 3X5000CO FEEDER LENGTH 2M	50
KTC5000ET32B	KT 3X5000CO FEEDER LENGTH	50
KTC5000ET32C	KT 3X5000CO FEEDER LENGTH	50
KTC5000ET33D	KT 3X5000CO FEEDER LENGTH	50
KTC5000ET33E	KT 3X5000CO FEEDER LENGTH	50
KTC5000ET33F	KT 3X5000CO FEEDER LENGTH	50
KTC5000ET340	KT 3X5000CO FEEDER LENGTH 4M	50
KTC5000ET41A	KT 4X5000CO FEEDER LENGTH	50
KTC5000ET420	KT 4X5000CO FEEDER LENGTH 2M	50
KTC5000ET42B	KT 4X5000CO FEEDER LENGTH	50
KTC5000ET42C	KT 4X5000CO FEEDER LENGTH	50
KTC5000ET43D	KT 4X5000CO FEEDER LENGTH	50
KTC5000ET43E	KT 4X5000CO FEEDER LENGTH	50
KTC5000ET43F	KT 4X5000CO FEEDER LENGTH	50
KTC5000ET440	KT 4X5000CO FEEDER LENGTH 4M	50
KTC5000ET51A	KT 5X5000CO FEEDER LENGTH	50
KTC5000ET520	KT 5X5000CO FEEDER LENGTH 2M	50
KTC5000ET52B	KT 5X5000CO FEEDER LENGTH	50
KTC5000ET52C	KT 5X5000CO FEEDER LENGTH	50
KTC5000ET53D	KT 5X5000CO FEEDER LENGTH	50
KTC5000ET53E	KT 5X5000CO FEEDER LENGTH	50
KTC5000ET53F	KT 5X5000CO FEEDER LENGTH	50
KTC5000ET540	KT 5X5000CO FEEDER LENGTH 4M	50
KTC5000ET71A	KT 5X5000CO FEEDER LENGTH	50
KTC5000ET720	KT 5X5000CO FEEDER LENGTH 2M	50
KTC5000ET72B	KT 5X5000CO FEEDER LENGTH	50
KTC5000ET72C	KT 5X5000CO FEEDER LENGTH	50
KTC5000ET73D	KT 5X5000CO FEEDER LENGTH	50
KTC5000ET73E	KT 5X5000CO FEEDER LENGTH	50

Cat. no.	Designations	Pages
KTC5000ET73F	KT 5X5000CO FEEDER LENGTH	50
KTC5000ET740	KT 5X5000CO FEEDER LENGTH 4M	50
KTC5000FC3A	KT 3X5000CO EDGEWISE ELBOW	73
KTC5000FC3B	KT 3X5000CO EDGEWISE ELBOW	73
KTC5000FC3D	KT 3X5000CO EDGEWISE ELBOW	73
KTC5000FC3E	KT 3X5000CO EDGEWISE ELBOW	73
KTC5000FC4A	KT 4X5000CO EDGEWISE ELBOW	73
KTC5000FC4B	KT 4X5000CO EDGEWISE ELBOW	73
KTC5000FC4D	KT 4X5000CO EDGEWISE ELBOW	73
KTC5000FC4E	KT 4X5000CO EDGEWISE ELBOW	73
KTC5000FC5A	KT 5X5000CO EDGEWISE ELBOW	73
KTC5000FC5B	KT 5X5000CO EDGEWISE ELBOW	73
KTC5000FC5D	KT 5X5000CO EDGEWISE ELBOW	73
KTC5000FC5E	KT 5X5000CO EDGEWISE ELBOW	73
KTC5000FC7A	KT 5X5000CO EDGEWISE ELBOW	73
KTC5000FC7B	KT 5X5000CO EDGEWISE ELBOW	73
KTC5000FC7D	KT 5X5000CO EDGEWISE ELBOW	73
KTC5000FC7E	KT 5X5000CO EDGEWISE ELBOW	73
KTC5000FJ3	KT 3X5000CU JUNCTION BLOC FIRE RATED	71
KTC5000FJ4	KT 4X5000CU JUNCTION BLOC FIRE RATED	71
KTC5000FJ5	KT 5X5000CU JUNCTION BLOC FIRE RATED	71
KTC5000FJ7	KT 5X5000CU JUNCTION BLOC FIRE RATED	71
KTC5000FP3A1	KT 3X5000CO FLAT ELBOW N1 FIRE	72
KTC5000FP3A2	KT 3X5000CO FLAT ELBOW N2 FIRE	72
KTC5000FP3B1	KT 3X5000CO FLAT ELBOW N1 FIRE	72
KTC5000FP3B2	KT 3X5000CO FLAT ELBOW N2 FIRE	72
KTC5000FP3D1	KT 3X5000CO FLAT ELBOW N1 FIRE	72
KTC5000FP3D2	KT 3X5000CO FLAT ELBOW N2 FIRE	72
KTC5000FP3E1	KT 3X5000CO FLAT ELBOW N1 FIRE	72
KTC5000FP3E2	KT 3X5000CO FLAT ELBOW N2 FIRE	72
KTC5000FP4A1	KT 4X5000CO FLAT ELBOW N1 FIRE	72
KTC5000FP4A2	KT 4X5000CO FLAT ELBOW N2 FIRE	72
KTC5000FP4B1	KT 4X5000CO FLAT ELBOW N1 FIRE	72
KTC5000FP4B2	KT 4X5000CO FLAT ELBOW N2 FIRE	72
KTC5000FP4D1	KT 4X5000CO FLAT ELBOW N1 FIRE	72
KTC5000FP4D2	KT 4X5000CO FLAT ELBOW N2 FIRE	72
KTC5000FP4E1	KT 4X5000CO FLAT ELBOW N1 FIRE	72
KTC5000FP4E2	KT 4X5000CO FLAT ELBOW N2 FIRE	72
KTC5000FP5A1	KT 5X5000CO FLAT ELBOW N1 FIRE	72
KTC5000FP5A2	KT 5X5000CO FLAT ELBOW N2 FIRE	72
KTC5000FP5B1	KT 5X5000CO FLAT ELBOW N1 FIRE	72
KTC5000FP5B2	KT 5X5000CO FLAT ELBOW N2 FIRE	72
KTC5000FP5D1	KT 5X5000CO FLAT ELBOW N1 FIRE	72
KTC5000FP5D2	KT 5X5000CO FLAT ELBOW N2 FIRE	72
KTC5000FP5E1	KT 5X5000CO FLAT ELBOW N1 FIRE	72
KTC5000FP5E2	KT 5X5000CO FLAT ELBOW N2 FIRE	72
KTC5000FP7A1	KT 5X5000CO FLAT ELBOW N1 FIRE	72
KTC5000FP7A2	KT 5X5000CO FLAT ELBOW N2 FIRE	72
KTC5000FP7B1	KT 5X5000CO FLAT ELBOW N1 FIRE	72
KTC5000FP7B2	KT 5X5000CO FLAT ELBOW N2 FIRE	72
KTC5000FP7D1	KT 5X5000CO FLAT ELBOW N1 FIRE	72
KTC5000FP7D2	KT 5X5000CO FLAT ELBOW N2 FIRE	72
KTC5000FP7E1	KT 5X5000CO FLAT ELBOW N1 FIRE	72
KTC5000FP7E2	KT 5X5000CO FLAT ELBOW N2 FIRE	72
KTC5000FT31A	KT 3X5000CO FEEDER LENGTH FIRE	70
KTC5000FT320	KT 3X5000CO FEEDER LENGTH FIRE 2M	70
KTC5000FT32B	KT 3X5000CO FEEDER LENGTH FIRE	70
KTC5000FT32C	KT 3X5000CO FEEDER LENGTH FIRE	70
KTC5000FT33D	KT 3X5000CO FEEDER LENGTH FIRE	70
KTC5000FT33E	KT 3X5000CO FEEDER LENGTH FIRE	70
KTC5000FT33F	KT 3X5000CO FEEDER LENGTH FIRE	70
KTC5000FT340	KT 3X5000CO FEEDER LENGTH FIRE 4M	70
KTC5000FT41A	KT 4X5000CO FEEDER LENGTH FIRE	70
KTC5000FT420	KT 4X5000CO FEEDER LENGTH FIRE 2M	70
KTC5000FT42B	KT 4X5000CO FEEDER LENGTH FIRE	70

Index of catalogue numbers

Cat. no.	Designations	Pages
KTC5000FT42C	KT 4X5000CO FEEDER LENGTH FIRE	70
KTC5000FT43D	KT 4X5000CO FEEDER LENGTH FIRE	70
KTC5000FT43E	KT 4X5000CO FEEDER LENGTH FIRE	70
KTC5000FT43F	KT 4X5000CO FEEDER LENGTH FIRE	70
KTC5000FT440	KT 4X5000CO FEEDER LENGTH FIRE 4M	70
KTC5000FT51A	KT 5X5000CO FEEDER LENGTH FIRE	70
KTC5000FT520	KT 5X5000CO FEEDER LENGTH FIRE 2M	70
KTC5000FT52B	KT 5X5000CO FEEDER LENGTH FIRE	70
KTC5000FT52C	KT 5X5000CO FEEDER LENGTH FIRE	70
KTC5000FT53D	KT 5X5000CO FEEDER LENGTH FIRE	70
KTC5000FT53E	KT 5X5000CO FEEDER LENGTH FIRE	70
KTC5000FT53F	KT 5X5000CO FEEDER LENGTH FIRE	70
KTC5000FT540	KT 5X5000CO FEEDER LENGTH FIRE 4M	70
KTC5000FT71A	KT 5X5000CO FEEDER LENGTH FIRE	70
KTC5000FT720	KT 5X5000CO FEEDER LENGTH FIRE 2M	70
KTC5000FT72B	KT 5X5000CO FEEDER LENGTH FIRE	70
KTC5000FT72C	KT 5X5000CO FEEDER LENGTH FIRE	70
KTC5000FT73D	KT 5X5000CO FEEDER LENGTH FIRE	70
KTC5000FT73E	KT 5X5000CO FEEDER LENGTH FIRE	70
KTC5000FT73F	KT 5X5000CO FEEDER LENGTH FIRE	70
KTC5000FT740	KT 5X5000CO FEEDER LENGTH FIRE 4M	70
KTC5000LC3A	KT 3X5000CO EDGEWISE ELBOW	61
KTC5000LC3B	KT 3X5000CO EDGEWISE ELBOW	61
KTC5000LC3D	KT 3X5000CO EDGEWISE ELBOW	61
KTC5000LC3E	KT 3X5000CO EDGEWISE ELBOW	61
KTC5000LC4A	KT 4X5000CO EDGEWISE ELBOW	61
KTC5000LC4B	KT 4X5000CO EDGEWISE ELBOW	61
KTC5000LC4D	KT 4X5000CO EDGEWISE ELBOW	61
KTC5000LC4E	KT 4X5000CO EDGEWISE ELBOW	61
KTC5000LC5A	KT 5X5000CO EDGEWISE ELBOW	61
KTC5000LC5B	KT 5X5000CO EDGEWISE ELBOW	61
KTC5000LC5D	KT 5X5000CO EDGEWISE ELBOW	61
KTC5000LC5E	KT 5X5000CO EDGEWISE ELBOW	61
KTC5000LC7A	KT 5X5000CO EDGEWISE ELBOW	61
KTC5000LC7B	KT 5X5000CO EDGEWISE ELBOW	61
KTC5000LC7D	KT 5X5000CO EDGEWISE ELBOW	61
KTC5000LC7E	KT 5X5000CO EDGEWISE ELBOW	61
KTC5000LP3A1	KT 3X5000CO FLAT ELBOW N1	60
KTC5000LP3A2	KT 3X5000CO FLAT ELBOW N2	60
KTC5000LP3B1	KT 3X5000CO FLAT ELBOW N1	60
KTC5000LP3B2	KT 3X5000CO FLAT ELBOW N2	60
KTC5000LP3C1	KT 3X5000CO FLAT ELBOW N1	61
KTC5000LP3C2	KT 3X5000CO FLAT ELBOW N2	61
KTC5000LP3D1	KT 3X5000CO FLAT ELBOW N1	60
KTC5000LP3D2	KT 3X5000CO FLAT ELBOW N2	60
KTC5000LP3E1	KT 3X5000CO FLAT ELBOW N1	60
KTC5000LP3E2	KT 3X5000CO FLAT ELBOW N2	60
KTC5000LP4A1	KT 4X5000CO FLAT ELBOW N1	60
KTC5000LP4A2	KT 4X5000CO FLAT ELBOW N2	60
KTC5000LP4B1	KT 4X5000CO FLAT ELBOW N1	60
KTC5000LP4B2	KT 4X5000CO FLAT ELBOW N2	60
KTC5000LP4C1	KT 4X5000CO FLAT ELBOW N1	61
KTC5000LP4C2	KT 4X5000CO FLAT ELBOW N2	61
KTC5000LP4D1	KT 4X5000CO FLAT ELBOW N1	60
KTC5000LP4D2	KT 4X5000CO FLAT ELBOW N2	60
KTC5000LP4E1	KT 4X5000CO FLAT ELBOW N1	60
KTC5000LP4E2	KT 4X5000CO FLAT ELBOW N2	60
KTC5000LP5A1	KT 5X5000CO FLAT ELBOW N1	60
KTC5000LP5A2	KT 5X5000CO FLAT ELBOW N2	60
KTC5000LP5B1	KT 5X5000CO FLAT ELBOW N1	60
KTC5000LP5B2	KT 5X5000CO FLAT ELBOW N2	60
KTC5000LP5C1	KT 5X5000CO FLAT ELBOW N1	61
KTC5000LP5C2	KT 5X5000CO FLAT ELBOW N2	61
KTC5000LP5D1	KT 5X5000CO FLAT ELBOW N1	60
KTC5000LP5D2	KT 5X5000CO FLAT ELBOW N2	60
KTC5000LP5E1	KT 5X5000CO FLAT ELBOW N1	60
KTC5000LP5E2	KT 5X5000CO FLAT ELBOW N2	60
KTC5000LP7A1	KT 5X5000CO FLAT ELBOW N1	60
KTC5000LP7A2	KT 5X5000CO FLAT ELBOW N2	60
KTC5000LP7B1	KT 5X5000CO FLAT ELBOW N1	60
KTC5000LP7B2	KT 5X5000CO FLAT ELBOW N2	60
KTC5000LP7C1	KT 5X5000CO FLAT ELBOW N1	61
KTC5000LP7C2	KT 5X5000CO FLAT ELBOW N2	61
KTC5000LP7D1	KT 5X5000CO FLAT ELBOW N1	60
KTC5000LP7D2	KT 5X5000CO FLAT ELBOW N2	60
KTC5000LP7E1	KT 5X5000CO FLAT ELBOW N1	60
KTC5000LP7E2	KT 5X5000CO FLAT ELBOW N2	60
KTC5000TC3	KT 3X5000CO TEE ON EDGE	65
KTC5000TC4	KT 4X5000CO TEE ON EDGE	65
KTC5000TC5	KT 5X5000CO TEE ON EDGE	65
KTC5000TC7	KT 5X5000CO TEE ON EDGE	65
KTC5000TN410	KT 4X5000CO NEUTRAL PERMUTA	56
KTC5000TP410	KT 4X5000CO PHASES PERMUTA	56
KTC5000YA3	KT 3X5000CO JUNCTION BLOC	58
KTC5000YA4	KT 4X5000CO JUNCTION BLOC	58
KTC5000YA5	KT 5X5000CO JUNCTION BLOC	58
KTC5000YA7	KT 5X5000CO JUNCTION BLOC	58
KTC5000ZC31	KT 3X5000CO EDGEWISE ZED N 1	66
KTC5000ZC32	KT 3X5000CO EDGEWISE ZED N2	66
KTC5000ZC41	KT 4X5000CO EDGEWISE ZED N1	66
KTC5000ZC42	KT 4X5000CO EDGEWISE ZED N2	66
KTC5000ZC51	KT 5X5000CO EDGEWISE ZED N1	66
KTC5000ZC52	KT 5X5000CO EDGEWISE ZED N2	66
KTC5000ZC71	KT 5X5000CO EDGEWISE ZED N1	66
KTC5000ZC72	KT 5X5000CO EDGEWISE ZED N2	66
KTC5000ZP3	KT 3X5000CO ZED ON FLAT	66
KTC5000ZP4	KT 4X5000CO ZED ON FLAT	66
KTC5000ZP5	KT 5X5000CO ZED ON FLAT	66
KTC5000ZP7	KT 5X5000CO ZED ON FLAT	66

KTC6300

KTC6300CP31	KT 3X6300CO FLAT EDGEWISE N1	69
KTC6300CP32	KT 3X6300CO FLAT EDGEWISE N2	69
KTC6300CP33	KT 3X6300CO FLAT EDGEWISE N3	69
KTC6300CP34	KT 3X6300CO FLAT EDGEWISE N4	69
KTC6300CP41	KT 4X6300CO FLAT EDGEWISE N1	69
KTC6300CP42	KT 4X6300CO FLAT EDGEWISE N2	69
KTC6300CP43	KT 4X6300CO FLAT EDGEWISE N3	69
KTC6300CP44	KT 4X6300CO FLAT EDGEWISE N4	69
KTC6300CP51	KT 5X6300CO FLAT EDGEWISE N1	69
KTC6300CP52	KT 5X6300CO FLAT EDGEWISE N2	69
KTC6300CP53	KT 5X6300CO FLAT EDGEWISE N3	69
KTC6300CP54	KT 5X6300CO FLAT EDGEWISE N4	69
KTC6300CP71	KT 5X6300CO FLAT EDGEWISE N1	69
KTC6300CP72	KT 5X6300CO FLAT EDGEWISE N2	69
KTC6300CP73	KT 5X6300CO FLAT EDGEWISE N3	69
KTC6300CP74	KT 5X6300CO FLAT EDGEWISE N4	69
KTC6300DB310	KT 3X6300CO EXPANSION UNIT	57
KTC6300DB410	KT 4X6300CO EXPANSION UNIT	57
KTC6300DB510	KT 5X6300CO EXPANSION UNIT	57
KTC6300DB710	KT 5X6300CO EXPANSION UNIT	57
KTC6300EB320	KT 3X6300CO BOLT ON LENGTH 2M	55
KTC6300EB340	KT 3X6300CO BOLT ON LENGTH 4M	55
KTC6300EB420	KT 4X6300CO BOLT ON LENGTH 2M	55
KTC6300EB440	KT 4X6300CO BOLT ON LENGTH 4M	55
KTC6300EB520	KT 5X6300CO BOLT ON LENGTH 2M	55
KTC6300EB540	KT 5X6300CO BOLT ON LENGTH 4M	55
KTC6300EB720	KT 5X6300CO BOLT ON LENGTH 2M	55
KTC6300EB740	KT 5X6300CO BOLT ON LENGTH 4M	55

Index of catalogue numbers

Cat. no.	Designations	Pages
KTC6300ED3203	KT 3X6300CO PLUG-IN LENGTH 2M	54
KTC6300ED3403	KT 3X6300CO PLUG-IN LENGTH 4M	54
KTC6300ED4203	KT 4X6300CO PLUG-IN LENGTH 2M	54
KTC6300ED4403	KT 4X6300CO PLUG-IN LENGTH 4M	54
KTC6300ED5203	KT 5X6300CO PLUG-IN LENGTH 2M	54
KTC6300ED5403	KT 5X6300CO PLUG-IN LENGTH 4M	54
KTC6300ED7203	KT 5X6300CO PLUG-IN LENGTH 2M	54
KTC6300ED7403	KT 5X6300CO PLUG-IN LENGTH 4M	54
KTC6300EL31	KT 3X6300CO FEED UNIT EL N1	93
KTC6300EL32	KT 3X6300CO FEED UNIT EL N2	93
KTC6300EL35	KT 3X6300CO FEED UNIT EL N5	95
KTC6300EL41	KT 4X6300CO FEED UNIT EL N1	93
KTC6300EL42	KT 4X6300CO FEED UNIT EL N2	93
KTC6300EL45	KT 4X6300CO FEED UNIT EL N5	95
KTC6300EL51	KT 5X6300CO FEED UNIT EL N1	93
KTC6300EL52	KT 5X6300CO FEED UNIT EL N2	93
KTC6300EL55	KT 5X6300CO FEED UNIT EL N5	95
KTC6300EL71	KT 5X6300CO FEED UNIT EL N1	93
KTC6300EL72	KT 5X6300CO FEED UNIT EL N2	93
KTC6300EL75	KT 5X6300CO FEED UNIT EL N5	95
KTC6300ER31	KT 3X6300CO FEED UNIT ER N1	82
KTC6300ER32	KT 3X6300CO FEED UNIT ER N2	82
KTC6300ER33	KT 3X6300CO FEED UNIT ER N3	83
KTC6300ER34	KT 3X6300CO FEED UNIT ER N4	83
KTC6300ER35	KT 3X6300CO FEED UNIT ER N5	84
KTC6300ER36	KT 3X6300CO FEED UNIT ER N6	84
KTC6300ER41	KT 4X6300CO FEED UNIT ER N1	82
KTC6300ER42	KT 4X6300CO FEED UNIT ER N2	82
KTC6300ER43	KT 4X6300CO FEED UNIT ER N3	83
KTC6300ER44	KT 4X6300CO FEED UNIT ER N4	83
KTC6300ER45	KT 4X6300CO FEED UNIT ER N5	84
KTC6300ER46	KT 4X6300CO FEED UNIT ER N6	84
KTC6300ER51	KT 5X6300CO FEED UNIT ER N1	82
KTC6300ER52	KT 5X6300CO FEED UNIT ER N2	82
KTC6300ER53	KT 5X6300CO FEED UNIT ER N3	83
KTC6300ER54	KT 5X6300CO FEED UNIT ER N4	83
KTC6300ER55	KT 5X6300CO FEED UNIT ER N5	84
KTC6300ER56	KT 5X6300CO FEED UNIT ER N6	84
KTC6300ER71	KT 5X6300CO FEED UNIT ER N1	82
KTC6300ER72	KT 5X6300CO FEED UNIT ER N2	82
KTC6300ER73	KT 5X6300CO FEED UNIT ER N3	83
KTC6300ER74	KT 5X6300CO FEED UNIT ER N4	83
KTC6300ER75	KT 5X6300CO FEED UNIT ER N5	84
KTC6300ER76	KT 5X6300CO FEED UNIT ER N6	84
KTC6300ET31A	KT 3X6300CO FEEDER LENGTH	54
KTC6300ET320	KT 3X6300CO FEEDER LENGTH 2M	54
KTC6300ET32B	KT 3X6300CO FEEDER LENGTH	54
KTC6300ET32C	KT 3X6300CO FEEDER LENGTH	54
KTC6300ET33D	KT 3X6300CO FEEDER LENGTH	54
KTC6300ET33E	KT 3X6300CO FEEDER LENGTH	54
KTC6300ET33F	KT 3X6300CO FEEDER LENGTH	54
KTC6300ET340	KT 3X6300CO FEEDER LENGTH 4M	54
KTC6300ET41A	KT 4X6300CO FEEDER LENGTH	54
KTC6300ET420	KT 4X6300CO FEEDER LENGTH 2M	54
KTC6300ET42B	KT 4X6300CO FEEDER LENGTH	54
KTC6300ET42C	KT 4X6300CO FEEDER LENGTH	54
KTC6300ET43D	KT 4X6300CO FEEDER LENGTH	54
KTC6300ET43E	KT 4X6300CO FEEDER LENGTH	54
KTC6300ET43F	KT 4X6300CO FEEDER LENGTH	54
KTC6300ET440	KT 4X6300CO FEEDER LENGTH 4M	54
KTC6300ET51A	KT 5X6300CO FEEDER LENGTH	54
KTC6300ET520	KT 5X6300CO FEEDER LENGTH 2M	54
KTC6300ET52B	KT 5X6300CO FEEDER LENGTH	54
KTC6300ET52C	KT 5X6300CO FEEDER LENGTH	54
KTC6300ET53D	KT 5X6300CO FEEDER LENGTH	54

Cat. no.	Designations	Pages
KTC6300ET53E	KT 5X6300CO FEEDER LENGTH	54
KTC6300ET53F	KT 5X6300CO FEEDER LENGTH	54
KTC6300ET540	KT 5X6300CO FEEDER LENGTH 4M	54
KTC6300ET71A	KT 5X6300CO FEEDER LENGTH	54
KTC6300ET720	KT 5X6300CO FEEDER LENGTH 2M	54
KTC6300ET72B	KT 5X6300CO FEEDER LENGTH	54
KTC6300ET72C	KT 5X6300CO FEEDER LENGTH	54
KTC6300ET73D	KT 5X6300CO FEEDER LENGTH	54
KTC6300ET73E	KT 5X6300CO FEEDER LENGTH	54
KTC6300ET73F	KT 5X6300CO FEEDER LENGTH	54
KTC6300ET740	KT 5X6300CO FEEDER LENGTH 4M	54
KTC6300FC3A	KT 3X6300CO EDGEWISE ELBOW	73
KTC6300FC3B	KT 3X6300CO EDGEWISE ELBOW	73
KTC6300FC4A	KT 4X6300CO EDGEWISE ELBOW	73
KTC6300FC4B	KT 4X6300CO EDGEWISE ELBOW	73
KTC6300FC5A	KT 5X6300CO EDGEWISE ELBOW	73
KTC6300FC5B	KT 5X6300CO EDGEWISE ELBOW	73
KTC6300FC7A	KT 5X6300CO EDGEWISE ELBOW	73
KTC6300FC7B	KT 5X6300CO EDGEWISE ELBOW	73
KTC6300FP3A1	KT 3X6300CO FLAT ELBOW N1 FIRE	72
KTC6300FP3A2	KT 3X6300CO FLAT ELBOW N2 FIRE	72
KTC6300FP3B1	KT 3X6300CO FLAT ELBOW N1 FIRE	72
KTC6300FP3B2	KT 3X6300CO FLAT ELBOW N2 FIRE	72
KTC6300FP3D1	KT 5X6300CO FLAT ELBOW N1 FIRE	72
KTC6300FP3D2	KT 3X6300CO FLAT ELBOW N2 FIRE	72
KTC6300FP3E1	KT 5X6300CO FLAT ELBOW N1 FIRE	72
KTC6300FP3E2	KT 3X6300CO FLAT ELBOW N2 FIRE	72
KTC6300FP4A1	KT 4X6300CO FLAT ELBOW N1 FIRE	72
KTC6300FP4A2	KT 4X6300CO FLAT ELBOW N2 FIRE	72
KTC6300FP4B1	KT 4X6300CO FLAT ELBOW N1 FIRE	72
KTC6300FP4B2	KT 4X6300CO FLAT ELBOW N2 FIRE	72
KTC6300FP4D1	KT 5X6300CO FLAT ELBOW N1 FIRE	72
KTC6300FP4D2	KT 4X6300CO FLAT ELBOW N2 FIRE	72
KTC6300FP4E1	KT 5X6300CO FLAT ELBOW N1 FIRE	72
KTC6300FP4E2	KT 4X6300CO FLAT ELBOW N2 FIRE	72
KTC6300FP5A1	KT 5X6300CO FLAT ELBOW N1 FIRE	72
KTC6300FP5A2	KT 5X6300CO FLAT ELBOW N2 FIRE	72
KTC6300FP5B1	KT 5X6300CO FLAT ELBOW N1 FIRE	72
KTC6300FP5B2	KT 5X6300CO FLAT ELBOW N2 FIRE	72
KTC6300FP5D1	KT 5X6300CO FLAT ELBOW N1 FIRE	72
KTC6300FP5D2	KT 5X6300CO FLAT ELBOW N2 FIRE	72
KTC6300FP5E1	KT 5X6300CO FLAT ELBOW N1 FIRE	72
KTC6300FP5E2	KT 5X6300CO FLAT ELBOW N2 FIRE	72
KTC6300FP7A1	KT 5X6300CO FLAT ELBOW N1 FIRE	72
KTC6300FP7A2	KT 5X6300CO FLAT ELBOW N2 FIRE	72
KTC6300FP7B1	KT 5X6300CO FLAT ELBOW N1 FIRE	72
KTC6300FP7B2	KT 5X6300CO FLAT ELBOW N2 FIRE	72
KTC6300FP7D1	KT 5X6300CO FLAT ELBOW N1 FIRE	72
KTC6300FP7D2	KT 5X6300CO FLAT ELBOW N2 FIRE	72
KTC6300FP7E1	KT 5X6300CO FLAT ELBOW N1 FIRE	72
KTC6300FP7E2	KT 5X6300CO FLAT ELBOW N2 FIRE	70
KTC6300FT31A	KT 3X6300CO FEEDER LENGTH FIRE	70
KTC6300FT320	KT 3X6300CO FEEDER LENGTH FIRE 2M	70
KTC6300FT32B	KT 3X6300CO FEEDER LENGTH FIRE	70
KTC6300FT32C	KT 3X6300CO FEEDER LENGTH FIRE	70
KTC6300FT33D	KT 3X6300CO FEEDER LENGTH FIRE	70
KTC6300FT33E	KT 3X6300CO FEEDER LENGTH FIRE	70
KTC6300FT33F	KT 3X6300CO FEEDER LENGTH FIRE	70
KTC6300FT340	KT 3X6300CO FEEDER LENGTH FIRE 4M	70
KTC6300FT41A	KT 4X6300CO FEEDER LENGTH FIRE	70
KTC6300FT420	KT 4X6300CO FEEDER LENGTH FIRE 2M	70
KTC6300FT42B	KT 4X6300CO FEEDER LENGTH FIRE	70
KTC6300FT42C	KT 4X6300CO FEEDER LENGTH FIRE	70
KTC6300FT43D	KT 4X6300CO FEEDER LENGTH FIRE	70
KTC6300FT43E	KT 4X6300CO FEEDER LENGTH FIRE	70

Index of catalogue numbers

Cat. no.	Designations	Pages
KTC6300FT43F	KT 4X6300CO FEEDER LENGTH FIRE	70
KTC6300FT440	KT 4X6300CO FEEDER LENGTH FIRE 4M	70
KTC6300FT51A	KT 5X6300CO FEEDER LENGTH FIRE	70
KTC6300FT520	KT 5X6300CO FEEDER LENGTH FIRE 2M	70
KTC6300FT52B	KT 5X6300CO FEEDER LENGTH FIRE	70
KTC6300FT52C	KT 5X6300CO FEEDER LENGTH FIRE	70
KTC6300FT53D	KT 5X6300CO FEEDER LENGTH FIRE	70
KTC6300FT53E	KT 5X6300CO FEEDER LENGTH FIRE	70
KTC6300FT53F	KT 5X6300CO FEEDER LENGTH FIRE	70
KTC6300FT540	KT 5X6300CO FEEDER LENGTH FIRE 4M	70
KTC6300FT71A	KT 5X6300CO FEEDER LENGTH FIRE	70
KTC6300FT720	KT 5X6300CO FEEDER LENGTH FIRE 2M	70
KTC6300FT72B	KT 5X6300CO FEEDER LENGTH FIRE	70
KTC6300FT72C	KT 5X6300CO FEEDER LENGTH FIRE	70
KTC6300FT73D	KT 5X6300CO FEEDER LENGTH FIRE	70
KTC6300FT73E	KT 5X6300CO FEEDER LENGTH FIRE	70
KTC6300FT73F	KT 5X6300CO FEEDER LENGTH FIRE	70
KTC6300FT740	KT 5X6300CO FEEDER LENGTH FIRE 4M	70
KTC6300GS1	KT 6300CU GUIDE SUPPORT	59
KTC6300HC310	KT 3X6300CO H EDGEWISE	59
KTC6300HC410	KT 4X6300CO H EDGEWISE	59
KTC6300HC510	KT 5X6300CO H EDGEWISE	59
KTC6300HC710	KT 5X6300CO H EDGEWISE	59
KTC6300LC3A	KT 3X6300CO EDGEWISE ELBOW	63
KTC6300LC3B	KT 3X6300CO EDGEWISE ELBOW	63
KTC6300LC4A	KT 4X6300CO EDGEWISE ELBOW	63
KTC6300LC4B	KT 4X6300CO EDGEWISE ELBOW	63
KTC6300LC5A	KT 5X6300CO EDGEWISE ELBOW	63
KTC6300LC5B	KT 5X6300CO EDGEWISE ELBOW	63
KTC6300LC7A	KT 5X6300CO EDGEWISE ELBOW	63
KTC6300LC7B	KT 5X6300CO EDGEWISE ELBOW	63
KTC6300LP3A1	KT 3X6300CO FLAT ELBOW N1	62
KTC6300LP3A2	KT 3X6300CO FLAT ELBOW N2	62
KTC6300LP3B1	KT 3X6300CO FLAT ELBOW N1	62
KTC6300LP3B2	KT 3X6300CO FLAT ELBOW N2	62
KTC6300LP3C1	KT 3X6300CO FLAT ELBOW N1	62
KTC6300LP3C2	KT 3X6300CO FLAT ELBOW N2	62
KTC6300LP3D1	KT 5X6300CO FLAT ELBOW N1	62
KTC6300LP3D2	KT 3X6300CO FLAT ELBOW N2	62
KTC6300LP3E1	KT 5X6300CO FLAT ELBOW N1	62
KTC6300LP3E2	KT 3X6300CO FLAT ELBOW N2	62
KTC6300LP4A1	KT 4X6300CO FLAT ELBOW N1	62
KTC6300LP4A2	KT 4X6300CO FLAT ELBOW N2	62
KTC6300LP4B1	KT 4X6300CO FLAT ELBOW N1	62
KTC6300LP4B2	KT 4X6300CO FLAT ELBOW N2	62
KTC6300LP4C1	KT 4X6300CO FLAT ELBOW N1	62
KTC6300LP4C2	KT 4X6300CO FLAT ELBOW N2	62
KTC6300LP4D1	KT 5X6300CO FLAT ELBOW N1	62
KTC6300LP4D2	KT 4X6300CO FLAT ELBOW N2	62
KTC6300LP4E1	KT 5X6300CO FLAT ELBOW N1	62
KTC6300LP4E2	KT 4X6300CO FLAT ELBOW N2	62
KTC6300LP5A1	KT 5X6300CO FLAT ELBOW N1	62
KTC6300LP5A2	KT 5X6300CO FLAT ELBOW N2	62
KTC6300LP5B1	KT 5X6300CO FLAT ELBOW N1	62
KTC6300LP5B2	KT 5X6300CO FLAT ELBOW N2	62
KTC6300LP5C1	KT 5X6300CO FLAT ELBOW N1	62
KTC6300LP5C2	KT 5X6300CO FLAT ELBOW N2	62
KTC6300LP5D1	KT 5X6300CO FLAT ELBOW N1	62
KTC6300LP5D2	KT 5X6300CO FLAT ELBOW N2	62
KTC6300LP5E1	KT 5X6300CO FLAT ELBOW N1	62
KTC6300LP5E2	KT 5X6300CO FLAT ELBOW N2	62
KTC6300LP7A1	KT 5X6300CO FLAT ELBOW N1	62
KTC6300LP7A2	KT 5X6300CO FLAT ELBOW N2	62
KTC6300LP7B1	KT 5X6300CO FLAT ELBOW N1	62
KTC6300LP7B2	KT 5X6300CO FLAT ELBOW N2	62
KTC6300LP7C1	KT 5X6300CO FLAT ELBOW N1	62
KTC6300LP7C2	KT 5X6300CO FLAT ELBOW N2	62
KTC6300LP7D1	KT 5X6300CO FLAT ELBOW N1	62
KTC6300LP7D2	KT 5X6300CO FLAT ELBOW N2	62
KTC6300LP7E1	KT 5X6300CO FLAT ELBOW N1	62
KTC6300LP7E2	KT 5X6300CO FLAT ELBOW N2	62
KTC6300TN410	KT 4X6300CO NEUTRAL PERMUTA	57
KTC6300TP410	KT 4X6300CO PHASES PERMUTA	57
KTC6300YA3	KT 3X6300CO JUNCTION BLOC	58
KTC6300YA4	KT 4X6300CO JUNCTION BLOC	58
KTC6300YA5	KT 5X6300CO JUNCTION BLOC	58
KTC6300YA7	KT 5X6300CO JUNCTION BLOC	58
KTC6300ZC31	KT 3X6300CO EDGEWISE ZED N1	67
KTC6300ZC32	KT 3X6300CO EDGEWISE ZED N2	67
KTC6300ZC41	KT 4X6300CO EDGEWISE ZED N1	67
KTC6300ZC42	KT 4X6300CO EDGEWISE ZED N2	67
KTC6300ZC51	KT 5X6300CO EDGEWISE ZED N1	67
KTC6300ZC52	KT 5X6300CO EDGEWISE ZED N2	67
KTC6300ZC71	KT 5X6300CO EDGEWISE ZED N1	67
KTC6300ZC72	KT 5X6300CO EDGEWISE ZED N2	67
KTC6300ZP3	KT 3X6300CO ZED ON FLAT	67
KTC6300ZP4	KT 4X6300CO ZED ON FLAT	67
KTC6300ZP5	KT 5X6300CO ZED ON FLAT	67
KTC6300ZP7	KT 5X6300CO ZED ON FLAT	67
LVS		
LVS03561	CANALIS SUPPORT	76
LVS04694	CONNECTION SUPPORT, 115 MM BETWEEN CENTRES	76
LVS04711	CANALIS CONNECTION FOR FRONT-CONNECTED NS-NT, 3P	76
LVS04712	CANALIS CONNECTION FOR FRONT-CONNECTED NS-NT, 4P	76
LVS04713	CANALIS CONNECTION FOR REAR-CONNECTED NS-NT, 3P	76
LVS04714	CANALIS CONNECTION FOR REAR-CONNECTED NS-NT, 4P	76
LVS04739	CANALIS SUPPORT FOR MTZ3/NW40B-63	76
LVS04851	FRONT CONNECTION COVER FOR VERTICAL FIXED NS1600	76
LVS04852	FRONT CONNECTION COVER FOR VERTICAL FIXED NS1600-NT	76
LVS04853	REAR CONNECTION COVER FOR VERTICAL FIXED NS1600	76
LVS04854	REAR CONNECTION COVER FOR VERTICAL FIXED NS1600-NT	76
LVS04861	FRONT CONNECTION COVER FOR NW	76
LVS04863	REAR CONNECTION COVER FOR NW	76
LVS04871	CANALIS COVER	76
LVS08903	12 ADHESIVE LABEL HOLDERS, H=24 MM, W=432 MM	122
LVS08905	12 ADHESIVE LABEL HOLDERS, H=24 MM, W=180 MM	122
LVS08907	12 ADHESIVE LABEL HOLDERS, H=24 MM, W=650 MM	122

Learn more about Canalis KT online

Schneider Electric Industries SAS

35, rue Joseph Monier
CS 30323
92506 Rueil Malmaison Cedex
France

RCS Nanterre 954 503 439
Capital social 896 313 776 €
www.se.com

10-2025
DEBU024EN

© 2025 - Schneider Electric. All Rights Reserved.
All trademarks are owned by Schneider Electric Industries SAS or its affiliated companies.