Smart Distribution Utility Strategies that Maximize Grid Efficiency

by Jean-Yves Bodin
Renzo Coccioni
Luc Hossenlopp
Michel Sacotte

Executive summary

Annual electricity network losses range from 2 to 10% in the European Union, depending on the country. These losses represent 5 billion euros of annual waste in distribution grids. New regulations are forcing electrical distribution utilities to enhance efficiency across their networks. Network operators are also challenged to integrate alternative energy generation and electric vehicles into their grids. This paper offers modern strategies for leveraging smart grid tools that will help meet and exceed regulatory efficiency targets.

Introduction

The efficiency of electrical distribution is rarely planned or managed by utilities. The unfortunate result is that most utilities waste substantial amounts of electricity. In fact, annual electricity transmission and distribution losses average 5% in the European Union.[1] [2] That breaks into 24% for transmission and 76% for distribution losses, that represents 5 billion euros in energy wasted every year in distribution. This number includes losses in the medium and low voltage lines and in primary and secondary substations.

As a result of government mandates, distribution system operators (DSOs) will need to improve the efficiency (lower the loss rates) of their electrical distribution networks. In addition, they are tasked with finding new ways to integrate smart grid drivers such as electric vehicle charging stations and alternative energy generation (wind, solar) at consumer locations.

Today, thanks to smart strategies it is both possible and prudent to plan, measure, and improve transmission and distribution efficiency. Improvements can reduce operating costs by enabling the installation of equipment and software that communicates and integrates highly networked (connected) sensors and actuators throughout the distribution path.

This paper explains how electrical distribution efficiency can be modernized to leverage the new promise of the "smart grid" while reducing distribution-related losses and associated costs (see Figure 1)[3]. Ramifications of the European Union's Energy Efficiency Directive and the introduction of the Ecodesign Directive are discussed, and best practices for deploying energy efficiency solutions are reviewed.

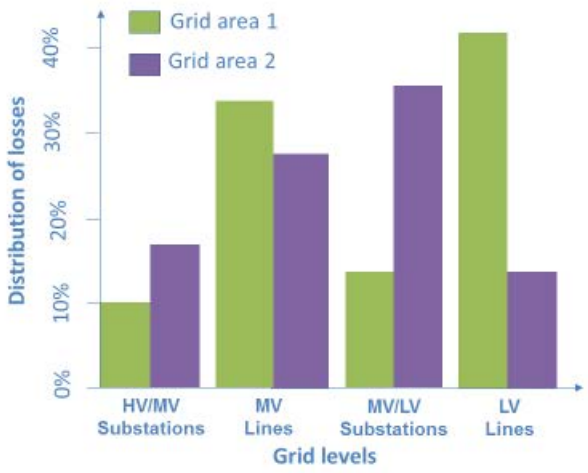

Figure 1

Where losses occur in the distribution grid vary depending upon network.

[1] CEER Workshop on Power Losses European experiences in the treatment of losses / Summary of a survey among NRAs, Ognjen Radovic / Michael Westermann, October 2016

[2] Eurelectric Power statistics 2013 full report

[3] Wolfram Heckmann, Lucas Hamann, Martin Braun, Heike Barth, Johannes Dasenbrock, Chenjie Ma, Thorsten Reiman, Alexander Schelder , "Detailed analysis of network losses in a million customer distribution grid with high penetration of distributed generation", *Cired paper 1478*, June 2013

Terminology

In the domain of electrical efficiency, it is always helpful to define common terms to avoid confusion when concepts and best practices are discussed. Below are a few terms that are utilized in this white paper and the associated definitions of vocabulary:

Smart grid is an electricity network that can intelligently integrate the actions of all users connected to it (generators, consumers, and those that do both) to efficiently deliver sustainable, economic, and secure electricity supplies. Source: ETP_SG SRA 2035

Passive energy efficiency is the act of reducing energy consumption by promoting measures that reduce thermal losses, the use of low consumption equipment, etc. Examples of low consumption equipment include the replacement of old transformers with efficient, fully redesigned transformers or the replacement of traditional lighting with low energy lighting.

Active energy efficiency is defined as effecting permanent change through measurement, monitoring, and control of energy usage. Examples of active energy efficiency include dynamic network reconfiguration and voltage optimization.

Technical losses are physical losses that include load losses (copper or Joule effect) and no load losses (corona losses, iron losses in transformers).

Non-technical losses are commercial losses that consist of delivered and consumed energy that cannot be invoiced to an end user. This category of losses can be split into fraudulent losses such as theft, and non-compliant material (transformers) or non-metered public lightning and hidden losses such as the in-house consumption of equipment in the distribution network (e.g., the power needed to cool transformers and run control systems).

No-load loss of a transformer is the active power absorbed when a rated voltage (tapping voltage) at a rated frequency is applied to the terminals of one winding, the other winding or windings being open-circuited. (IEC60076-01 2011)

Load loss of a transformer is the absorbed active power at a rated frequency and reference temperature associated with a pair of windings when rated current (tapping current) is flowing through the line terminals of one of the windings, and the terminals of the other winding are short-circuited. Further windings, if existing, are open-circuited. (IEC60076-01 2011)

Distributed energy resources (DER) include a variety of supply-side and demand-side resources such as distributed generators (renewable or back-up), controllable (or flexible) loads used for demand-response, energy storage (electrical or thermal) and electric vehicles (which play a dual role of both load and energy storage).

Regulatory challenges

The current European Energy Efficiency Directive 2012/27/EU is now under negotiation; it will probably come into force in 2018, and it needs to be transposed in Member States two years later. Challenges for distribution system operators may come from energy savings obligations.

The following sections provide examples of best practices that can help distribution system operators cut costs and accommodate the above regulations.

Active energy strategies for loss control

Issue 1: Technical losses in MV lines

In Europe, networks are configured in open loops and controlled in order to be able to isolate a fault and restore power (see Figure 2). The normal open points of the loops are strategically located to maximize the quality of service, i.e., low interruption duration (SAIDI) and low interruption frequency (SAIFI). However, this approach does not minimize losses.

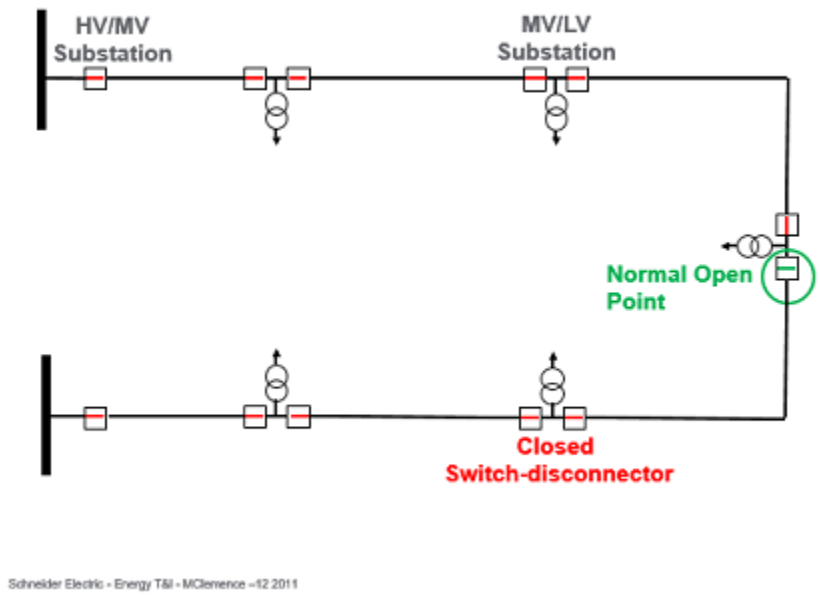

Figure 2

Diagram of a network configured in open loops and controlled in order to isolate a fault and restore power

Strategy: Advanced distribution management systems

Systems built to estimate losses, like advanced distribution management systems (ADMS), need a real-time network topology, network measurements, load profiles at MV/LV substations, and customer consumption information to determine the optimal location of normal open points. In this environment, when the system operator plans to open or close a switch-disconnector, the ADMS simulates the impact on reliability of supply, losses, and voltage management. Algorithms calculate optimum configurations on an hourly, monthly, seasonal, or yearly basis according to provided load curves, weather forecasts, real-time data coming from sensors, smart meters, and number of switch operations (see Figure 3).

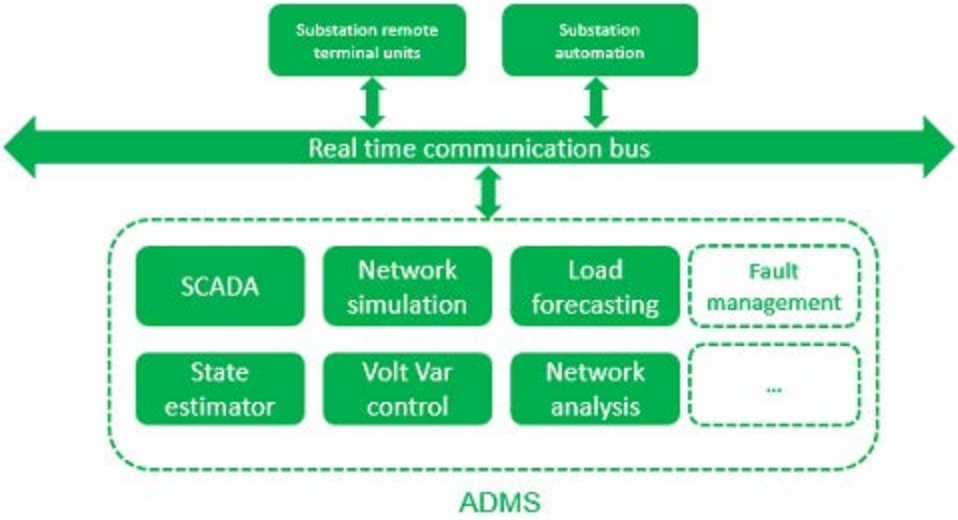

Figure 3

Simulation and testing is an effective method for reducing network losses

Optimal locations of normal open points in a distribution grid (power flow) depend on the actual power demand in the grid (consumption). Power demand fluctuates throughout any given day and will also change with the different seasons. These load changes impact the optimal locations of normal open points (see Figure 4). It is therefore necessary to use a grid reconfiguration application for testing multiple grid states and to deploy a solution capable of identifying the optimal locations of normal open switches. The proper radial distribution grid configuration will be achieved in accordance with pre-selected criteria and objectives.

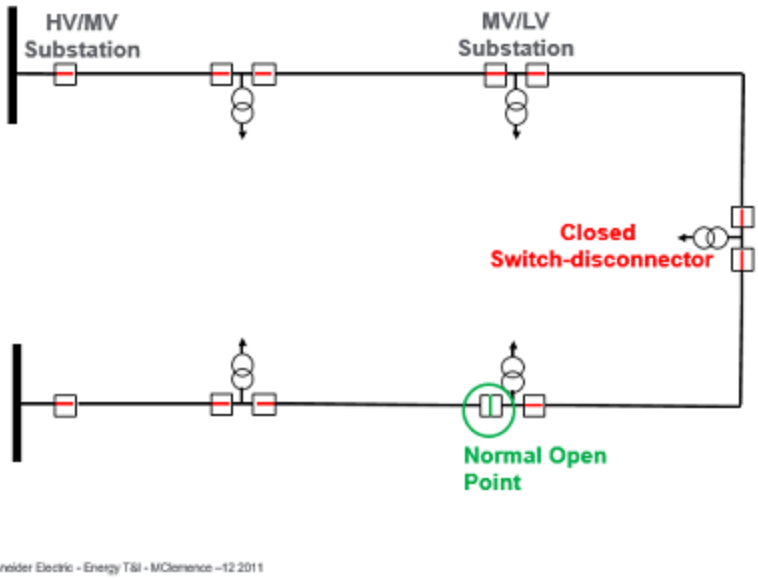

Figure 4

Reconfigured network (compared to Figure 2) with optimal location of Normal Open Point to minimize losses

Deployment of such a system can help minimize losses, minimize load unbalance in HV/MV substation transformers and feeders, unload overloaded segments of a network, improve voltage quality, and achieve an optimal voltage profile. However, the system can also be constrained by an infrastructure that limits the feasibility of switching operations and with infrastructure voltage and loading limits.

Utilities have already successfully implemented this system. A large European utility has experienced a steady gain of about 4 percent all year round, reconfiguring the grid on a seasonal basis.

Calculations show that losses can be further reduced by reconfiguring the network on a weekly or hourly basis. However, in the case of the hourly reconfiguration, this is not realistic in terms of number of operations. Switch-disconnectors equipment is designed to respond to current needs, such as 1,000 operations per lifetime of the device. Hourly reconfiguration would require 200,000 operations during the lifetime of the device.

Issue 2: Impact of DER on voltage management

"As a result of the massive injection of distributed energy resources (DER) requirements onto the grid, voltage management now presents DSOs with a major challenge."

One of the main responsibilities of utilities around the world is to maintain voltage limits as agreed to via contract with their customers (i.e., within +/- 10% of agreed to target). Voltage control is traditionally performed by transformers, using on-load tap changers (OLTC) and capacitor banks that inject reactive power into the grid at the HV/MV substation level. The distribution system operator (DSO) fixes a setpoint and prepares scenarios and ranges based on seasonal load curves, for example.

As a result of the massive injection of distributed energy resources (DER) requirements onto the grid, voltage management presents DSOs with a major challenge. They now must manage situations where voltage may be rising on one part of their grid while decreasing on another part. Thus, DSOs are deploying sensors to monitor the voltage all along feeders, new actuators that can regulate the voltage at different levels, and centralized or distributed intelligence to manage the macro voltage control.

Strategy: Fine-tuned voltage control infrastructure

The monitoring of MV equipment in older substations is costly as it requires complex, intrusive methods. Thus, the ability to acquire accurate, "real time" voltage measurements requires the deployment of new solutions and sensors to minimize long-term global costs.

A number of new solutions can be deployed to address this challenge. (For more information on smart components, see the Schneider Electric white paper Transitioning to Smart MV/LV Substations as the Cornerstone of Your Smart Grid.)

- New capacitive or resistive voltage dividers can be inserted in cable connections at the transformer or ring main unit (RMU) level.
- New RTU generation (remote terminal unit) allows user to remotely control the RMU and to measure MV and LV voltage accurately for Volt-Var optimization and for load shedding and peak shaving management.
- New smart sensors can today be easily installed on new and existing large power transformers and can be connected to the cloud. They allow predictive maintenance and end-of-life management, which are key to reducing long-term global costs. For this purpose, insulation aging and temperature at the cable connection points can be determined.
- Virtual sensors are another option for voltage measurement. They are capable of estimating or modeling the MV voltage based on other data that is easier and cheaper to measure. For instance, MV voltage may be estimated from LV through distribution transformers or from load currents through line impedance modeling. Depending on the level of accuracy required, sensor and installation costs can be drastically reduced.
- Actuators, which are most often installed at the HV/MV substation level (on load tap changers within HV/MV transformers, capacitor banks, and voltage

regulators), can also be installed along MV lines or even farther downstream. These new actuators are installed in smart transformers with up to nine taps. The transformers can use MV voltage to increase or decrease the LV voltage. They are actuated by contactors with an operation durability of more than 1 million operations. No maintenance is required.

- Reactive energy injectors can also be utilized at the distributed generation (DG) level through insertion of dedicated devices or by using DG controllable inverters.

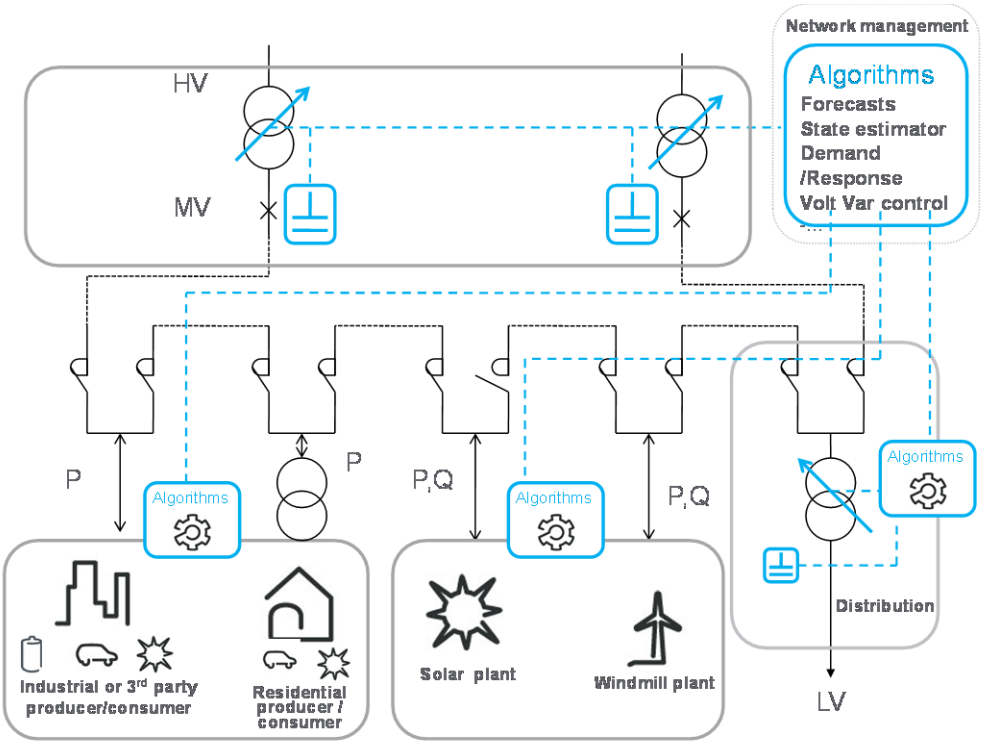

Figure 5

Voltage control aided by algorithms can help manage changes brought about by the increased presence of distributed energy resources (DER).

In the above two cases, the complexity of distribution systems limits the capabilities of the actuators and devices whose control algorithm operates on the basis of the local information and neglects the entire network state. The centralized control provided by the ADMS system (see Figure 4) coordinates all devices in accordance with the actual network conditions ensuring optimal voltage regulation at all levels, starting with the legacy regulation at HV/MV substations down to devices in primary and secondary networks. ADMS combines control of traditional Volt/VAR devices, such as OLTCs, voltage regulators, and capacitor banks, with control of DER reactive power output in a synchronized manner in order to provide voltage management and eliminate voltage violations. Additionally, DER active power output may be adjusted to mitigate issues with overload or reverse power flows. The process of violation detection, dispatch of mitigation commands and verification of success is done automatically in a closed loop manner, following the pre-specified objectives, rules and limitations. Such optimization is envisioned to be as non-intrusive as possible toward 3rd-party resources who participate in the program, by utilizing load shedding/production curtailment only for the critical system conditions and when other resources are already engaged to their maximum.

Voltage control infrastructure to minimize technical losses

The above mentioned fine-tuned voltage control infrastructure designed for DER integration can also be used to minimize technical losses: Either on a heavily-loaded network when it can be used to operate at maximum voltage to reduce current flow at constant power and therefore reduce joules losses along cables and transform-

ers, or it can be operated at minimum voltage on a lightly loaded network to minimize no load losses in transformers. It can also be used to minimize load peaks, thereby reducing the need to use costly, high-carbon footprint energy resources.

"Fine-tuned voltage control infrastructure needed for DER integration can also be used to minimize technical losses."

These voltage management solutions have been tested in several pilot projects in Europe. Some manufacturers provide distribution transformers equipped with settings of voltage under load. DER integration on distribution networks can result in drastic reduction of PV disconnection, technical losses reduction in MV lines, and reduction of load peak.

A joint use of ADMS and smart meters is very helpful to determine the more loaded feeder at an LV level, so that the utility can apply corrective actions. Moreover, thanks to available information about over- and under-voltage, ADMS can optimize the voltage level and reduce joule losses.

Conservation voltage regulation (CVR) where energy could be saved by lowering the voltage at end users' sites and other voltage management strategies such as operating the network at maximum voltage are not described in this white paper.

Issue 3: Technical losses in LV lines

This section is applicable to European-style networks where LV networks have three phases and a neutral wire.

Technical losses on MV networks represent about 3% of the distributed energy. Joules losses represent 70% of these losses[4] (but this is dependent upon the load rating of the network). More losses occur in the LV network. The LV ends of distribution networks are often heavily unbalanced between transformers (transformer to transformer), between LV feeders within a transformer, and between the three phases of one given transformer.

These unbalances cause joules losses in wires and transformers due to higher current levels on the more loaded part of the network and to current flow in neutral wires. These losses are estimated to be between 200 and 1,000 euros per substation per year.

Strategy: Detailed analysis of MV/LV level performance data

The daily load, voltage, power factor, and temperature profiles of the substation and feeders are examples of data that can be gathered by the monitoring system. A chronological overview of events can be determined, such as the voltage duration curve, load duration curve per feeder, vector diagram for the diagnosis of unbalances per feeder and other values. These data points can then be formatted into customizable dashboards. To reduce the data volume that is transmitted from substation to the distribution management system (DMS), the curves can be calculated by local remote terminal unit (RTU). This practice helps to avoid communication congestion (see Figure 5).

[4] Dr. Georgios Papaefthymiou, Christina Beestermöller, Ann Gardiner, "Ecofys Incentives to improve energy efficiency in EU Grids", 15 April 2013

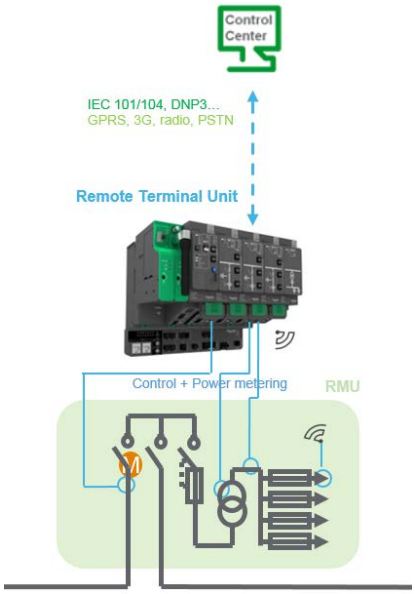

Figure 6

Data gathered from remote terminal units (RTUs) can feed dashboards visible from the control center or from other remote locations.

LV incomers and LV feeders are equipped with energy meters connected to the RTU in the substation. The system can calculate and locate imbalances on LV feeders. The re-balancing of loads can be performed by field staff to switch a targeted customer from one phase to another.

This particular LV monitoring allows the network to accommodate more DER since it addresses the issues of load imbalance and helps to reduce energy loss. The switch from one phase to another can be either regularly scheduled (e.g. once a year) or can be addressed on an ad hoc, case-by-case basis. Benefits of deployment include an estimated cost reduction fueled by reduced joules losses in cables of 200 to 800 euros per year and an improvement of substation power output of up to 30%.

Issue 4: Non-technical loss identification

Schneider Electric estimates that 90% of non-technical losses occur in LV networks. Losses are assumed to range between 1,000 to 10,000 euros per MV/LV substation per year in European countries. Therefore, LV networks are a top priority in terms of loss reduction. A first step in assessing the situation is to begin monitoring to determine how much loss is being incurred. In the past, LV networks were rarely monitored because, due to the high number of points to equip, monitoring was costly.

Now, new approaches, architectures, and technologies allow for affordable and more precise monitoring.

Strategy: Smart metering deployment

Locating the sources of losses within the network is one of the first challenges. One solution for monitoring LV networks is to utilize smart energy meters as additional sensors to supply data regarding the energy performance of the network. Under this scenario, the first step would be to determine the proper location within the network of each of these meters. The next step would be to then equip each LV feeder with a meter. Care would have to be taken to install these meters without any outages to customers. It takes around one hour per substation to install the energy management meters.

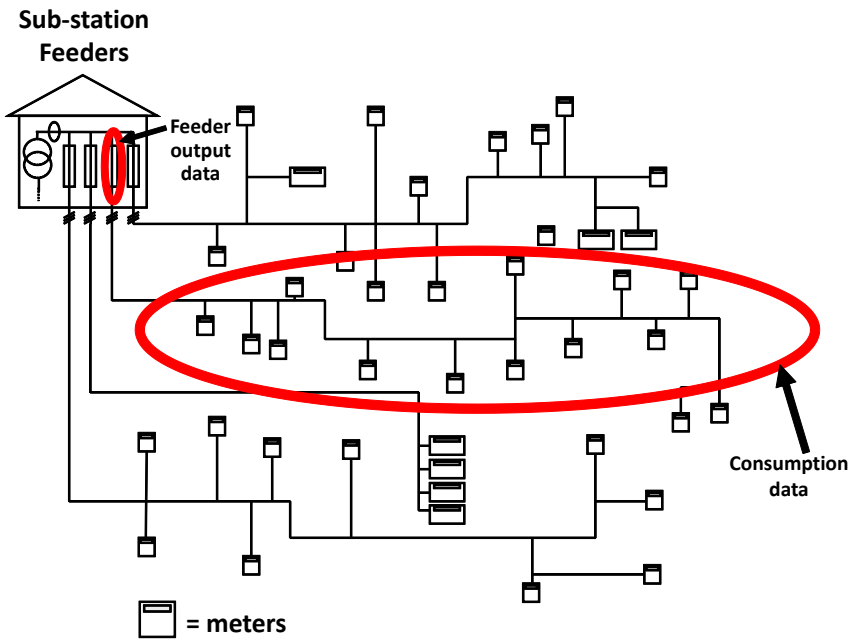

Figure 7

In this example, energy performance is determined by comparing aggregated energy consumption data from meters to energy output data from the LV feeders.

An additional step would be to compare the energy measured on the LV feeder with the sum of energies invoiced by the smart meters located across this same particular feeder network (see Figure 6). This action locates and quantifies losses, which then enables network operators to implement energy efficiency improvements. A variety of options exist for monitoring the system:

- at the local substation (S/S) level between the metering data concentrator (AMM) and the S/S remote terminal unit (RTU)
- at the regional control center level between distribution management system (DMS) and metering data management (MDM)
- via the cloud as a third-party service

Manufacturers' field experience has shown that utilities that implement this approach for locating and quantifying losses have been able to detect significant losses. In one LV network, for example, non-technical losses were located and identified among a pool of 5 to 15 end users and a loss as small as 100 watts (the power of one light bulb) within a 630 kVA MV/LV substation was detected. This demonstrates the level of technical precision that is possible for both accurate location and measurement of energy losses.

In addition to loss detection, the above smart metering approach also provides faster detection and location of outages on LV networks, which leads to an improved reliability of supply. Neutral connection degradation can also be detected via voltage imbalances and this can help to prevent neutral cut out. In fact, the monitoring of transformer and neutral wire loads, as well as load balancing across the network, improves the quality of substation asset management.

Passive energy loss control strategies

The previous sections of this paper highlight active energy efficiency strategies (energy consumption reductions resulting from software and network-related information and data gathering/aggregation procedures). The following sections refer to passive energy efficiency strategies (which focus more on hardware infrastructure upgrades).

Issue: Inefficient transformers

Distribution transformer losses in the EU electrical network amount to 38 TWh/year[5]. Distribution and power transformers represent around 5 million units. After power lines, distribution transformers have the second highest potential for energy efficiency improvement.[6]

Strategies agreed against CO2 emissions

CO2 emissions emerge as a rapidly growing global concern. Strategies to combat climate change, such as the Paris Agreement, and European Union initiatives are necessary. The Paris Agreement entered into force on November 4, 2016, where nations agreed upon:

- a long-term goal of keeping the increase in global average temperature to well below 2°C above pre-industrial levels;
- a target of limiting the increase to 1.5°C, since this would significantly reduce risks and the impacts of climate change
- a plan to undertake rapid reductions based on the best available science.

For its part, the European Commission is looking at cost-efficient ways to make the European economy more climate-friendly and less energy-consuming.
Its low-carbon economy roadmap suggests that:

- by 2050, the EU should cut greenhouse gas emissions to 80% below 1990 levels
- milestones to achieve this are 40% emissions cuts by 2030 and 60% by 2040
- all sectors need to contribute
- the low-carbon transition is feasible and affordable.

In the transmission and distribution network, the benefit resulting from more efficient transformer designs has been estimated to be about 16 TWh per year by 2025[7] in Europe. This corresponds to 3.7 MtCO2/year emissions[5].

According to regulation 2014/548/EU[7] loss rates must be harmonized with eco-design requirements and new transformers installed from July 1, 2015 onward must satisfy higher efficiency requirements.

Strategy: Cut costs, losses with transformer technology upgrades

If we compare both transformers and overhead lines and cables, transformers are relatively easy to replace. In addition, modern transformer technology is capable of reducing transformer losses considerably.

Within the domain of transformers two types of losses exist: no load and load losses.

---

[5] IMPACT ASSESSMENT, Implementing Directive 2009/125/EC of the European Parliament and of the Council with regard to Ecodesign Requirements for Power, Distribution and Small Transformers, page 6 and 49. ISR-University of Coimbra April 2013

[6] T&D Europe position paper on Study for preparing the first Working Plan of the EcoDesign Directive Report for tender No.: ENTR/06/026, published on Nov. 22nd, March 6 2008, page 2

[7] "COMMISSION REGULATION (EU) No 548/2014 of 21 May 2014 on implementing Directive 2009/125/EC of the European Parliament and of the Council with regard to small, medium and large power transformers."

"No load" or "fixed" losses are present as soon as the transformer is energized. "Load losses" vary according to the load on the transformer. Distribution and power transformers run 24 hours a day, therefore their energy efficiency can be impacted by reductions in both "no load losses" and "load losses."

For utilities, it may be more advantageous to reduce iron losses than copper losses, since the iron losses are continuous as long as transformers are connected to the system, typically 8,760 hours a year. These transformers normally do not supply load during this entire period and when they do supply load, it is never at the maximum load capacity (typical load factor of around 0.2).

On the other hand, it may be advantageous for industrial applications to reduce both, the "no load losses" and the "load losses", as these transformers are operated mainly at high load factor (typically between 0.5 and 0.7).

Amorphous technology availability

This technology was developed in 1970s and amorphous transformers were beginning to be used in the 1980s. They became popular in the mid-2000s because of the rise of energy conservation and CO2 emissions concerns. They have been deployed in many countries including Japan (410,000 units installed), USA (420,000 units installed), China (385,000 units installed), and India (800,000 units installed).

Several amorphous transformers have been homologated by the customer and installed in the French network for over seven years, and in Germany and Belgium for over five years with positive results.

The effects of short circuit currents greatly impact transformer performance, the stability of the network, and the environment. Transformers that do not withstand a short circuit can explode in the worst case, or have a large impedance variation that leads to an important voltage drop, issues on efficiency, and other consequences on the networks. Therefore, since short circuits occur quite often, short circuit withstand capability is recognized as a key characteristic for transformers installed in a European distribution network. Cenelec and IEC standards have taken into account these characteristics by increasing the severity of the verification criteria after short circuit tests.

Short circuit tests performed on amorphous core transformers show that cores and coils can be destroyed or they significantly affect the no load losses due to the partial damage to the core. This is because of the fragility of the amorphous material. It is more critical for amorphous core transformers to withstand the short circuit dynamic effects, and the withstand capability must be proven through short circuit testing. Therefore, from a transformer reliability perspective, the equipment must pass a short circuit test. Unfortunately, very few manufacturers have successfully carried out these types of specialized tests worldwide.

Table 1 compares traditional/conventional transformers to new generation transformers (amorphous technology). The data concludes that loss reduction can be realised through upgrades to the newer technology. For example, low losses GOES transformers according to Ecodesign requirements Tier 2, have 10% less "no load loss" compared to Ecodesign requirements Tier 1 low losses GOES transformers. Even greater loss reduction can be achieved with the amorphous technology.

In Table 1, comparisons are made among low losses GOES and amorphous transformers in the A0, AA0, and AA0++ category.

Table 1

Loss comparisons of low loss GOES Tier 1/ Tier 2, and amorphous transformers

Rated power	Core Technology	No load losses level	Load losses level	No load losses (W)	No load losses reduction
400kVA/Oil immersed	Low loss GOES Tier 1	A0	Ck: 4600 W	430	0%
400kVA/Oil immersed	Low loss GOES Tier 2	AA0	Ak: 3250 W	387	10%
400kVA/Oil immersed	Amorphous	AAA0	Ck/Ak: 4600 W / 3250 W	220	49%

Some manufacturers have successfully tested a complete range of amorphous transformers from 100kVA up to 1600kVA in oil immersed. In order to assess transformer efficiency, it is important to capitalize the losses. The financial value of losses generated during the transformer lifetime represents a significant portion of the investment.

Today, some possibilities of transformers exist with different levels of losses. The customer can optimize his OPEX and CAPEX by choosing the best compromise regarding no load losses and load losses. In order to choose the level of no load losses and load losses, the customer should know the load factor of the transformer, the cost of the KWh, the discount rate and the time to get his payback. Utilities in the European Union add the value of losses generated during the lifetime of the equipment to the purchasing cost. The financial value of losses is calculated by multiplying the amount of losses in (W) declared by the manufacturer, by the value indicated by the purchaser (expressed in €/W).

Conclusion

Utilities operating electrical distribution networks are now in a position to reduce losses in their networks thanks to smart strategies enhancing active and passive energy efficiency. This will contribute to achieving European Union targets of new renewable energy sources deployment, energy efficiency enhancement, and CO2 emission reduction.

As a result of the massive introduction of local production, distribution networks are becoming more difficult to manage. This is because many distribution networks are poorly or partially instrumented, especially downstream in the areas of secondary substations. Furthermore, old transformers in many of those networks are inefficient.

Therefore, more accurate and highly networked (connected) sensors, actuators, and advanced distribution management systems, as well as more efficient distribution transformers, will be required to achieve European Union targets.

Those interested in initiating a migration plan for the development of a more efficient distribution network should consider the following steps:

- Within the next three months, identify areas where waste can occur: primary substations, MV feeders, secondary substations. Consider parameters such as density of population, power of existing and forecasted DER, strategy around smart metering, and existing communication options.

- Within the next year, install sensors and applications that can accurately assess the magnitude of the efficiency losses. Begin to identify areas of improvement.
- Within the next two years, implement pilot project to demonstrate feasibility, quantify the gains, and estimate the deployment costs.
- Within the next 10 years, plan and implement the staged rollout.

Although market realities may increase short-term capital costs, long-term advantages will include lower operating costs, reduced energy waste, and a more integrated and flexible network.

About the authors

Jean-Yves Bodin is Marketing Director at Schneider Electric for Energy Digital Solutions, globally responsible for EcoStruxure Grid strategy and roadmap. He is an IT and OT veteran with more than 30 years of experience in both Corporate IT and Automation and Control industry, with extensive experience in Automation solutions and services. He graduated from CentraleSupélec (Paris, France).

Renzo Coccioni is Industry & Government Relations Director at Schneider Electric's Energy Division. He holds a degree in electrical engineering from the Swiss Federal Institute of Technology Zurich (ETH). Renzo started his career 1980 at Sprecher & Schuh / Sprecher Energie in Oberentfelden, Switzerland, where he held various positions in the development of SF6 high voltage circuit breakers and medium voltage switchgear. He was Unit Managing Director of Alstom / Areva T&D in Linz, Austria, before moving to central business functions
to lead marketing of medium voltage products. He participates in several task forces focused on Smart Grids, REACh, and SF6 in T&D Europe/ORGALIME/ZVEI and at the European Commission level.

Luc Hossenlopp has 30 years of experience in the T&D Business, with a focus on automation and software. He is currently the Chief Technical Officer for the Software part of the Schneider Electric's Energy Division. He is member of CIGRE and IEC.

Michel Sacotte is Vice President for Standardization & Prescriptions at Schneider Electric's Transformers Line of business. He is a graduate of the Ecole Nationale d'Ingénieurs de Metz. Since 1975, his responsibilities have included Chief Engineer of Technical Department, R&D Manager, Technical & Quality Manager, and Technical/Purchasing/Quality Manager/Industrial in France Transfo during 11years and R&D Vice President at Schneider Electric's Transformers Line of Business during 7 Years. He has acted as Working Group convener of several IEC and Cenelec standards for distribution transformers (mainly for dry type, self protected filled transformers, wind turbine application, energy efficiency). He has been a major contributor to the IEC Standardization work surrounding the domain of transformers and has been awarded the 1906 award by IEC in 2012. He was Chairman of French National committee for UTE and Manufacturers (Gimélec) for transformers. Michel is Chairman of T&D Europe's Transformers activity. He has filed numerous patents covering various aspects of distribution transformers.