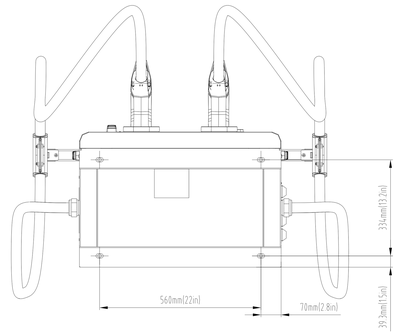
334mm(13.2in)
560mm(22in)
70mm(2.8in)
39.3mm(1.5in)

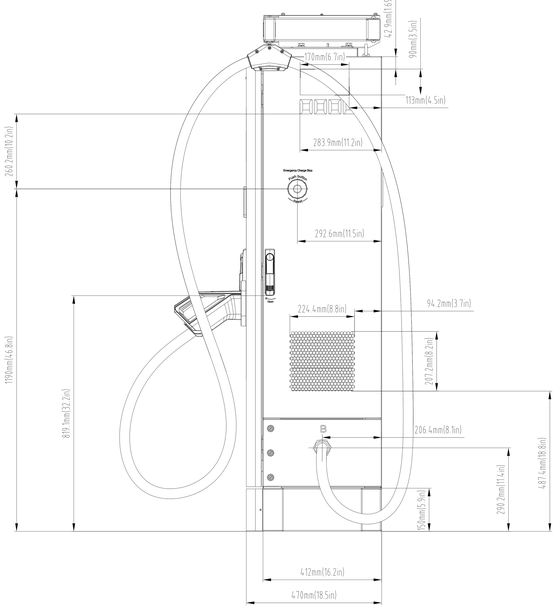
42.7mm(1.6in)
90mm(3.5in)
170mm(6.7in)
113mm(4.5in)
283.9mm(11.2in)
Emergency Stop
292.6mm(11.5in)
224.4mm(8.8in)
94.2mm(3.7in)
207.2mm(8.2in)
206.4mm(8.1in)
487.4mm(18.8in)
290.2mm(11.4in)
150mm(5.9in)
764.7mm(30.1in)
1190mm(46.8in)
819.1mm(32.2in)
412mm(16.2in)
470mm(18.5in)

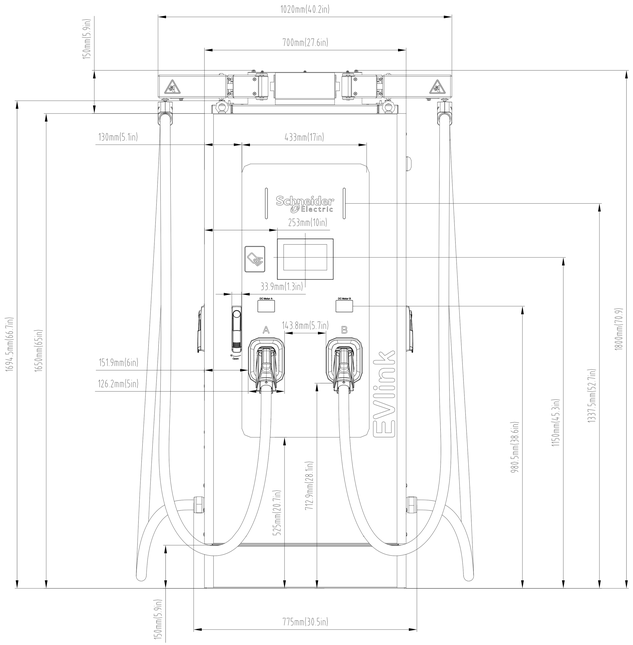
1020mm(40.2in)
150mm(5.9in)
700mm(27.6in)
130mm(5.1in)
433mm(17in)
Schneider Electric
253mm(10in)
33.9mm(1.3in)
143.8mm(5.7in)
A
B
EVlink
151.9mm(6in)
126.2mm(5in)
1694.5mm(66.7in)
1655mm(65in)
525mm(20.7in)
712.9mm(28.1in)
986.5mm(38.8in)
1150mm(45.3in)
1337.5mm(52.7in)
1880mm(70.9)
150mm(5.9in)
775mm(30.5in)

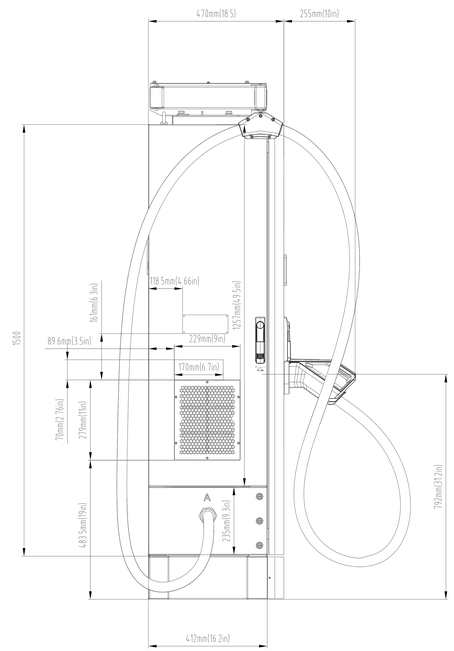
470mm(18.5)
255mm(10in)
118.5mm(4.66in)
166mm(6.3in)
1257mm(49.5in)
89.6mm(3.5in)
229mm(9in)
170mm(6.7in)
1500
710mm(27.6in)
279mm(11in)
A
235mm(9.3in)
483.5mm(19in)
792mm(31.2in)
412mm(16.2in)

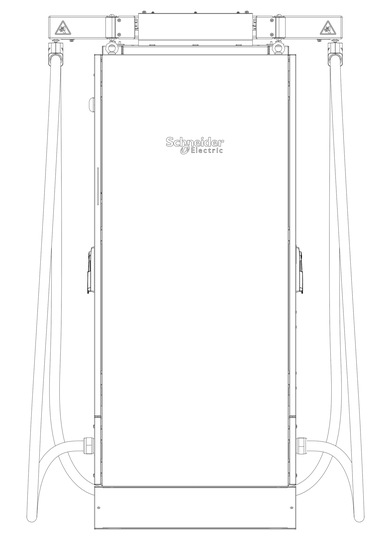
Schneider Electric

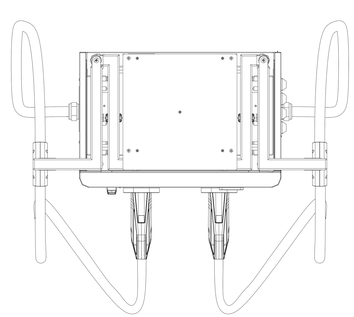

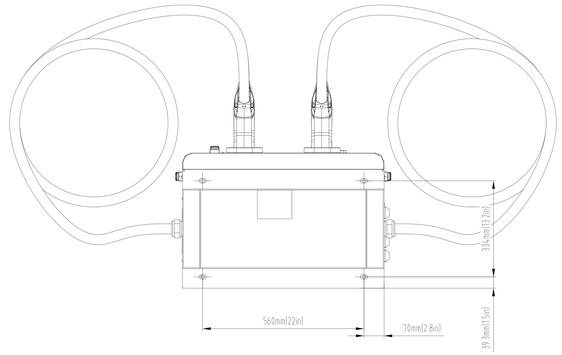
334mm(13.2in)
560mm(22in)
70mm(2.8in)
39.3mm(1.5in)

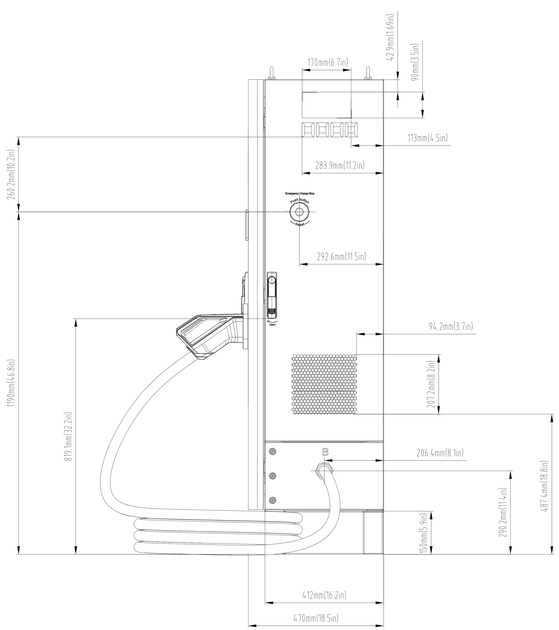
170mm(6.7in)
42.9mm(1.69in)
90mm(3.5in)
113mm(4.5in)
283.9mm(11.2in)
264.2mm(10.2in)
292.6mm(11.5in)
94.2mm(3.7in)
207.2mm(8.2in)
1190mm(46.8in)
819.1mm(32.2in)
206.4mm(8.1in)
487.4mm(18.8in)
290.2mm(11.4in)
150mm(5.9in)
412mm(16.2in)
470mm(18.5in)

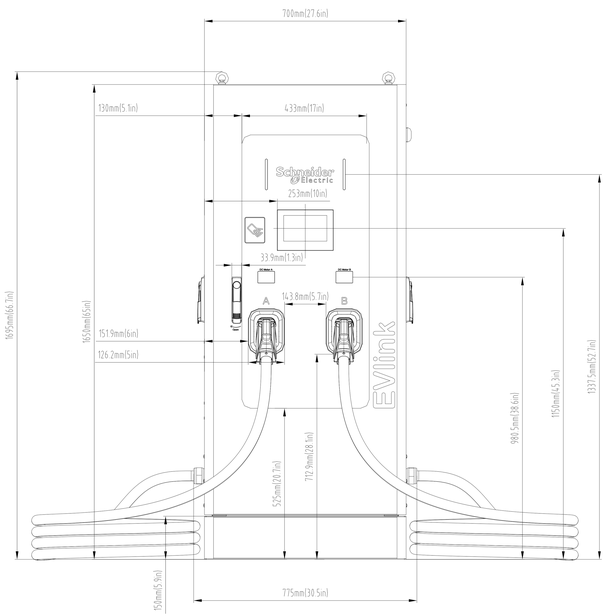
700mm(27.6in)
130mm(5.1in)
433mm(17in)
Schneider Electric
253mm(10in)
33.9mm(1.3in)
143.8mm(5.7in)
A
B
EVlink
1695mm(66.7in)
1651mm(65in)
151.9mm(6in)
126.2mm(5in)
525mm(20.7in)
712.9mm(28.1in)
988.5mm(38.6in)
1150mm(45.3in)
1337.5mm(52.7in)
150mm(5.9in)
775mm(30.5in)

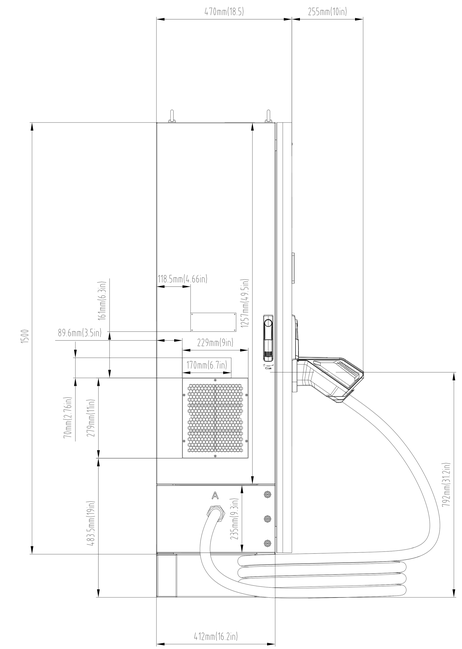
470mm(18.5)
255mm(10in)
118.5mm(4.66in)
1257mm(49.5in)
164mm(6.3in)
89.6mm(3.5in)
229mm(9in)
170mm(6.7in)
1500
710mm(27.6in)
279mm(11in)
A
483.5mm(19in)
235mm(9.3in)
792mm(31.2in)
412mm(16.2in)

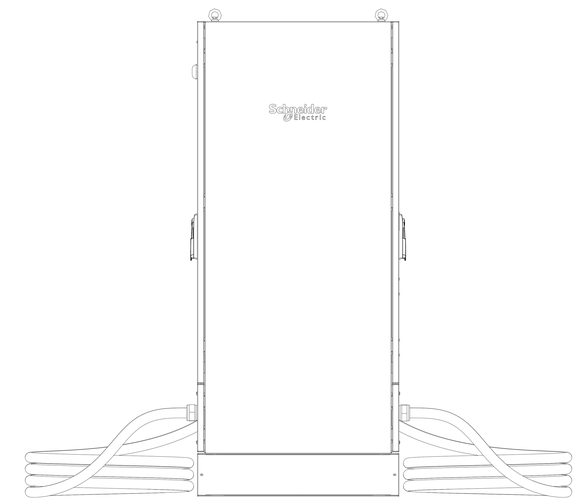
Schneider Electric

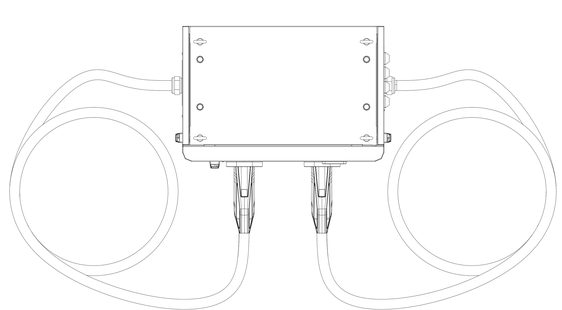

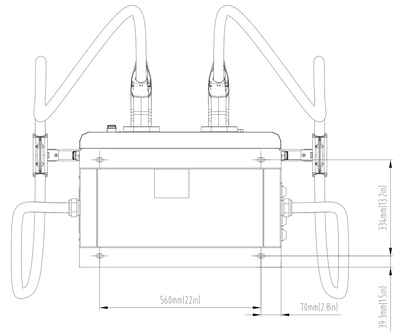
334mm(13.2in)
560mm(22in)
70mm(2.8in)
39.3mm(1.5in)

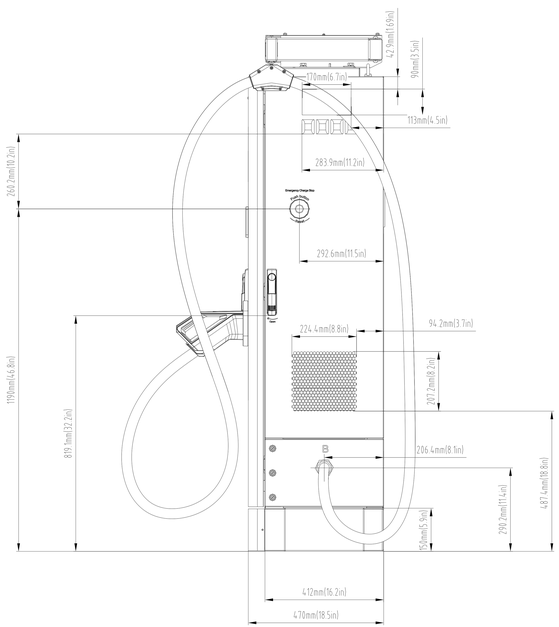
42.9mm(1.69in)
90mm(3.5in)
170mm(6.7in)
113mm(4.5in)
283.9mm(11.2in)
Emergency Stop
292.6mm(11.5in)
224.4mm(8.8in)
94.2mm(3.7in)
207.2mm(8.2in)
206.4mm(8.1in)
487.4mm(18.8in)
290.2mm(11.4in)
150mm(5.9in)
1190mm(46.8in)
819.1mm(32.2in)
764.7mm(30.1in)
412mm(16.2in)
470mm(18.5in)

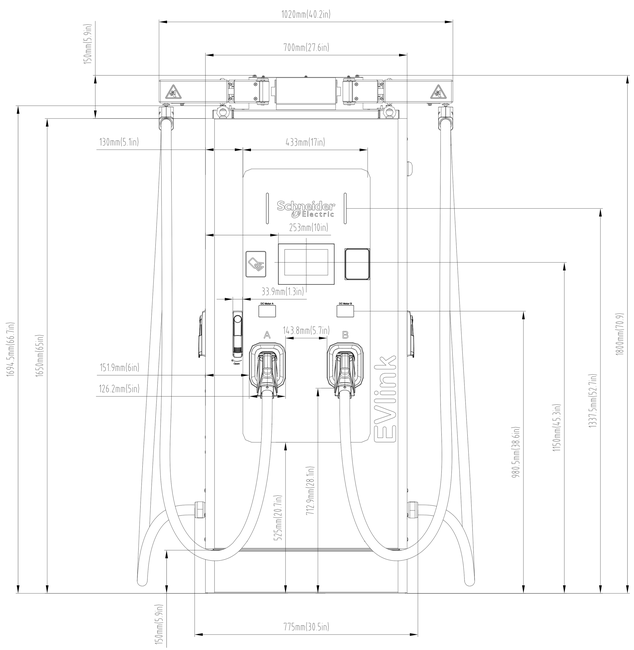
1020mm(40.2in)
700mm(27.6in)
150mm(5.9in)
130mm(5.1in)
433mm(17in)
Schneider Electric
253mm(10in)
33.9mm(1.3in)
143.8mm(5.7in)
A
B
EVlink
151.9mm(6in)
126.2mm(5in)
1694.5mm(66.7in)
1655mm(65in)
525mm(20.7in)
712.9mm(28.1in)
986.5mm(38.8in)
1150mm(45.3in)
1337.5mm(52.7in)
1880mm(70.9)
150mm(5.9in)
775mm(30.5in)

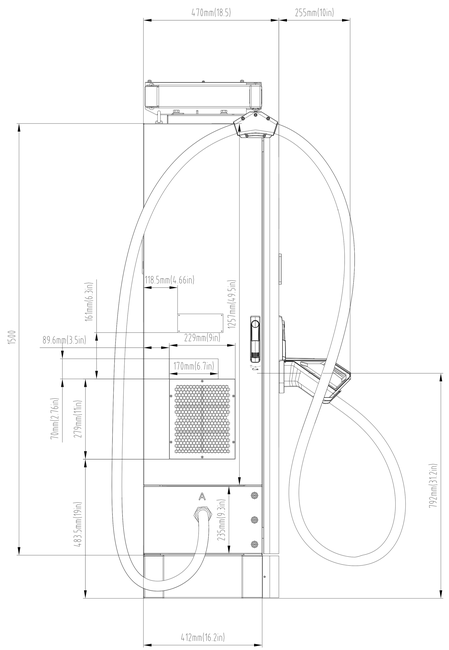
470mm(18.5)
255mm(10in)
118.5mm(4.66in)
164mm(6.3in)
1257mm(49.5in)
89.6mm(3.5in)
229mm(9in)
170mm(6.7in)
710mm(27.6in)
279mm(11in)
1500
483.5mm(19in)
A
235mm(9.3in)
792mm(31.2in)
412mm(16.2in)

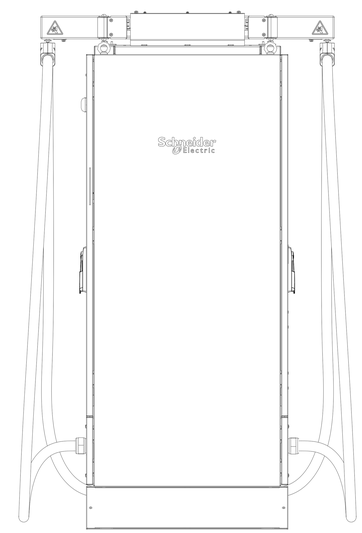
Schneider Electric

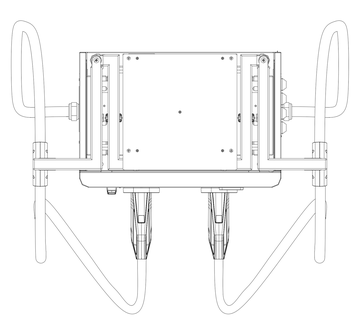

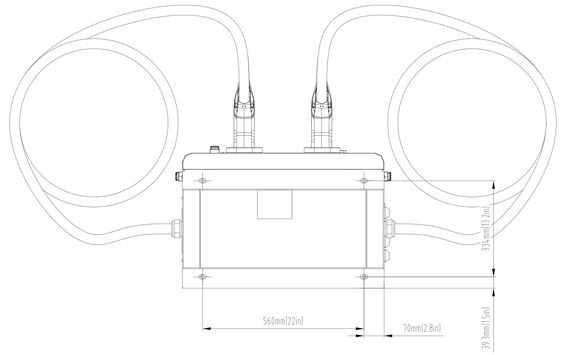
334mm(13.2in)
560mm(22in)
70mm(2.8in)
39.3mm(1.5in)

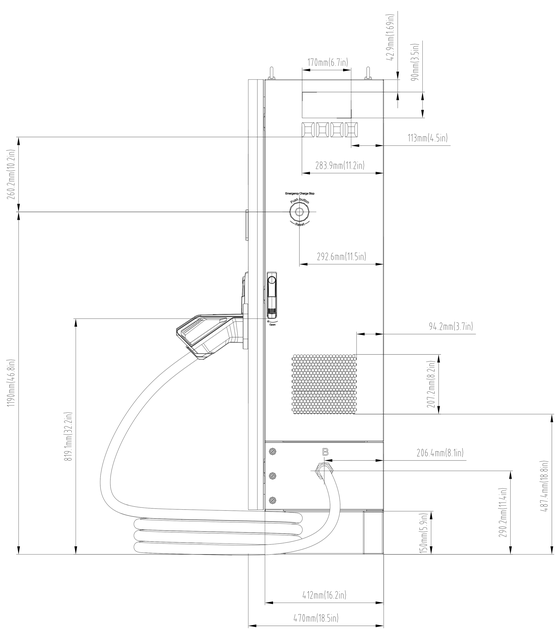
170mm(6.7in)
42.9mm(1.69in)
90mm(3.5in)
113mm(4.5in)
283.9mm(11.2in)
264.2mm(10.2in)
292.6mm(11.5in)
94.2mm(3.7in)
207.2mm(8.2in)
1190mm(46.8in)
819.1mm(32.2in)
206.4mm(8.1in)
487.4mm(18.8in)
290.2mm(11.4in)
150mm(5.9in)
412mm(16.2in)
470mm(18.5in)

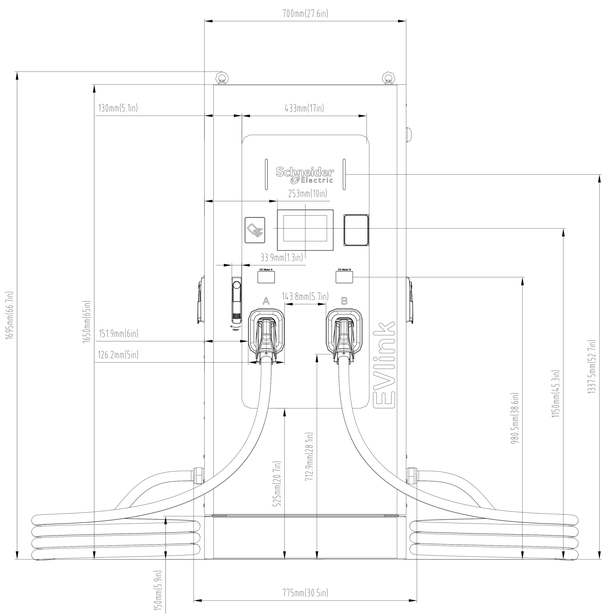
700mm(27.6in)
130mm(5.1in)
433mm(17in)
Schneider Electric
253mm(10in)
33.9mm(1.3in)
143.8mm(5.7in)
A
B
EVlink
1695mm(66.7in)
1651mm(65in)
151.9mm(6in)
126.2mm(5in)
525mm(20.7in)
712.9mm(28.1in)
988.5mm(38.6in)
1150mm(45.3in)
1337.5mm(52.7in)
150mm(5.9in)
775mm(30.5in)

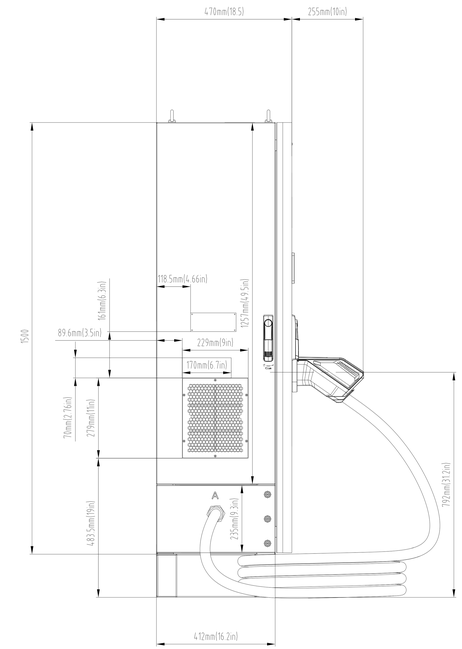
470mm(18.5)
255mm(10in)
118.5mm(4.66in)
1257mm(49.5in)
16.1mm(6.3in)
89.6mm(3.5in)
229mm(9in)
170mm(6.7in)
1500
710mm(27.6in)
279mm(11in)
A
483.5mm(19in)
235mm(9.3in)
792mm(31.2in)
412mm(16.2in)

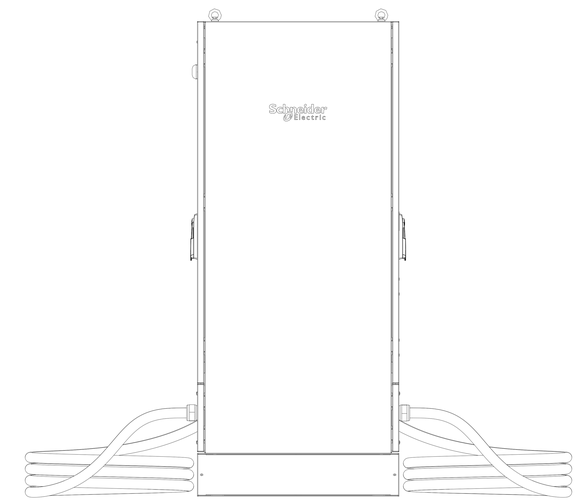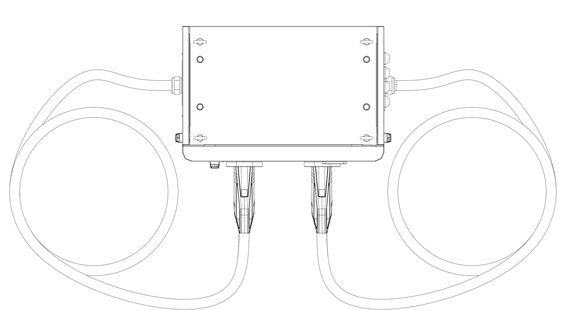
Schneider Electric