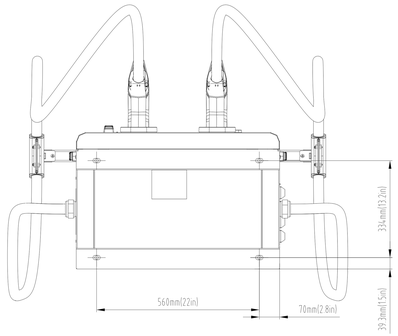
334mm(13.2in)
560mm(22in)
70mm(2.8in)
39.3mm(1.5in)

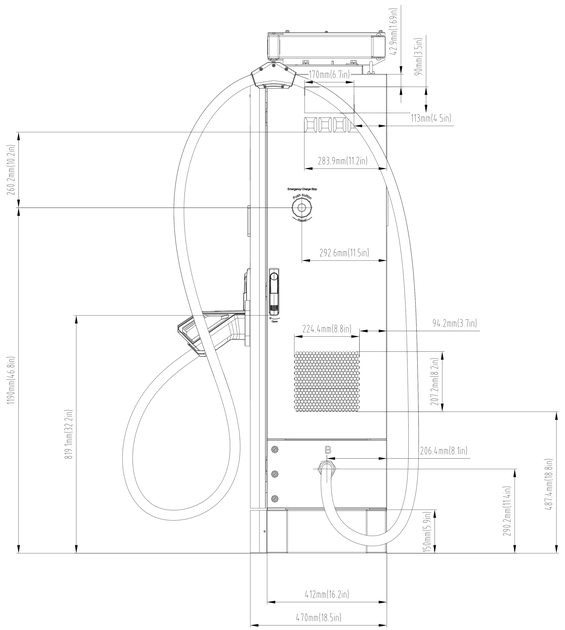
42.9mm(1.69in)
90mm(3.5in)
170mm(6.7in)
113mm(4.5in)
260.2mm(10.2in)
283.9mm(11.2in)
Emergency Charge Stop
292.6mm(11.5in)
224.4mm(8.8in)
94.2mm(3.7in)
207.2mm(8.2in)
1190mm(46.8in)
819.1mm(32.2in)
B
206.4mm(8.1in)
487.4mm(19.8in)
290.7mm(11.4in)
150mm(5.9in)
412mm(16.2in)
470mm(18.5in)

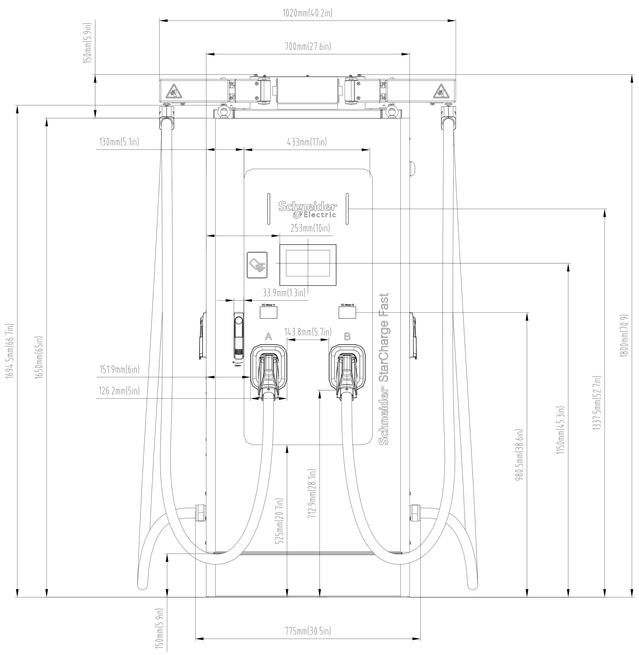
1020mm(40.2in)
700mm(27.6in)
150mm(5.9in)
133mm(5.1in)
433mm(17in)
Schneider Electric
253mm(10in)
33.9mm(1.3in)
143.8mm(5.7in)
A
B
Schneider StarCharge Fast
151.9mm(6in)
126.2mm(5in)
1694.5mm(66.7in)
1651mm(65in)
1880mm(70.9)
1337.5mm(52.7in)
1150mm(45.3in)
980.5mm(38.6in)
535mm(21.1in)
712.9mm(28.1in)
150mm(5.9in)
775mm(30.5in)

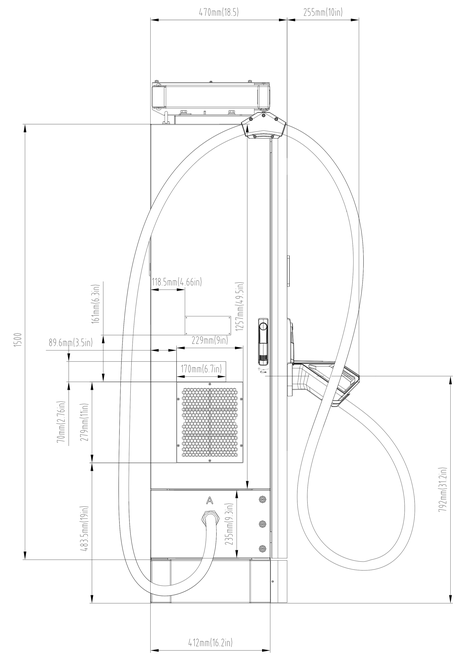
470mm(18.5)
255mm(10in)
1500
118.5mm(4.66in)
161mm(6.3in)
125.7mm(4.95in)
89.6mm(3.5in)
229mm(9in)
170mm(6.7in)
70mm(2.76in)
279mm(11in)
A
235mm(9.3in)
483.5mm(19in)
793mm(31.2in)
412mm(16.2in)

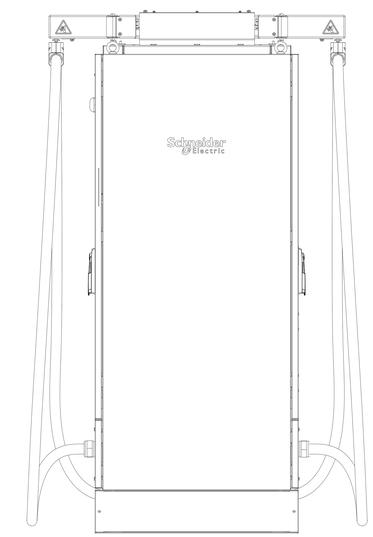
Schneider Electric

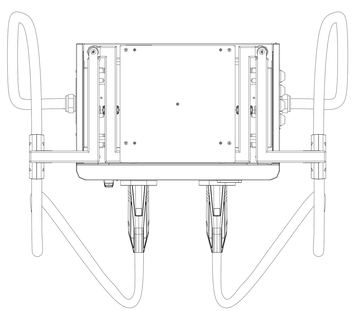

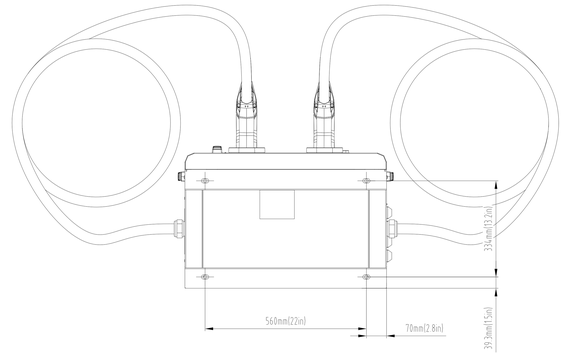
334mm(13.2in)
560mm(22in)
70mm(2.8in)
39.3mm(1.5in)

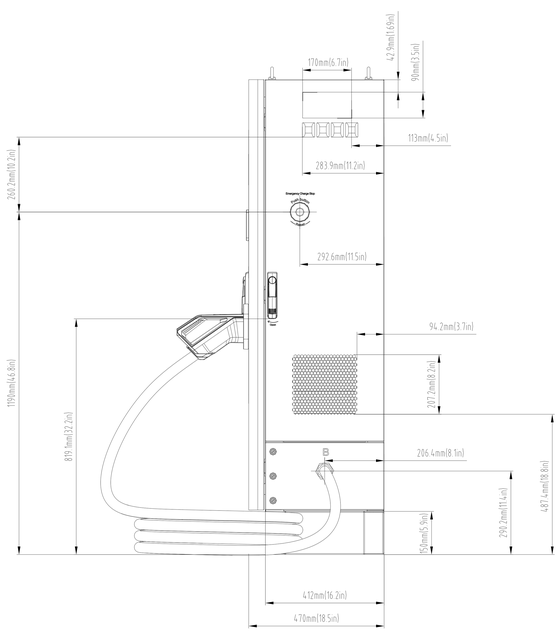
170mm(6.7in)
42.9mm(1.69in)
90mm(3.5in)
113mm(4.5in)
283.9mm(11.2in)
262.2mm(10.2in)
Emergency Charge Stop
292.6mm(11.5in)
94.2mm(3.7in)
207.2mm(8.2in)
1190mm(46.8in)
810.0mm(32.2in)
206.4mm(8.1in)
487.4mm(19.8in)
290.2mm(11.4in)
150mm(5.9in)
412mm(16.2in)
470mm(18.5in)

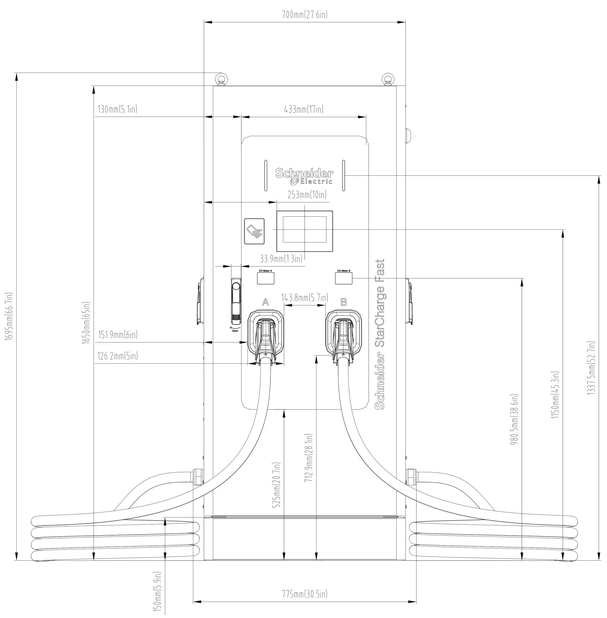
700mm(27.6in)
130mm(5.1in)
433mm(17in)
Schneider Electric
253mm(10in)
33.9mm(1.3in)
143.8mm(5.7in)
A
B
Schneider StarCharge Fast
1695mm(66.7in)
1653mm(65in)
151.9mm(6in)
126.2mm(5in)
1337.5mm(52.7in)
1150mm(45.3in)
980.5mm(38.6in)
1195mm(47in)
525mm(20.7in)
712.9mm(28.1in)
150mm(5.9in)
775mm(30.5in)

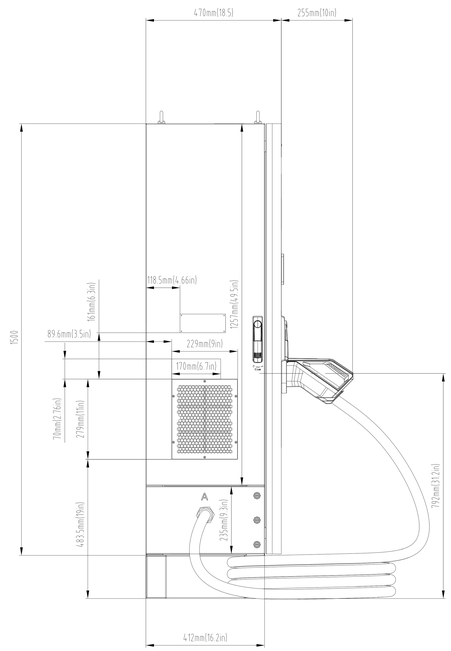
470mm(18.5)
255mm(10in)
1500
118.5mm(4.66in)
1257.9mm(49.5in)
161mm(6.3in)
89.6mm(3.5in)
229mm(9in)
170mm(6.7in)
710mm(27.6in)
279mm(11in)
A
235mm(9.3in)
1192mm(47in)
1483.5mm(58in)
412mm(16.2in)

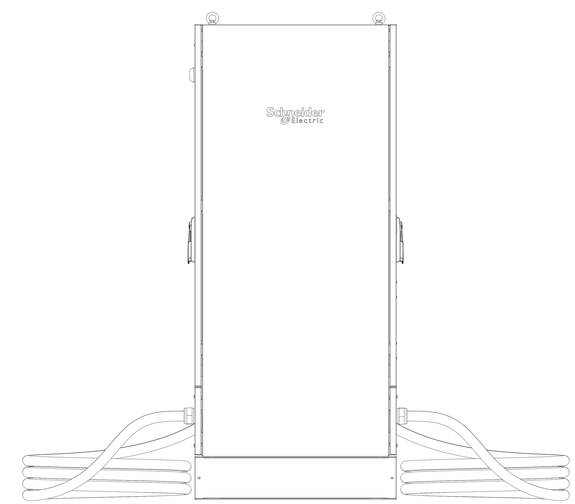
Schneider Electric

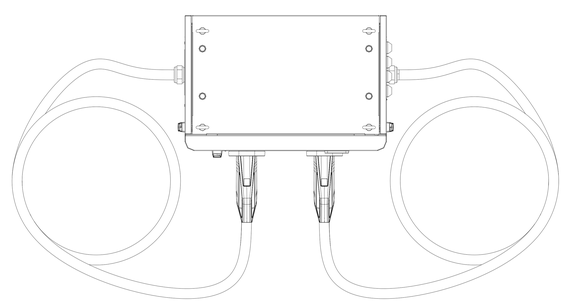

334mm(13.2in)
560mm(22in)
70mm(2.8in)
39.3mm(1.5in)

42.9mm(1.69in)
90mm(3.5in)
170mm(6.7in)
113mm(4.5in)
283.9mm(11.2in)
250.2mm(9.2in)
292.6mm(11.5in)
224.4mm(8.8in)
94.2mm(3.7in)
207.2mm(8.2in)
1190mm(46.8in)
819.1mm(32.2in)
206.4mm(8.1in)
487.4mm(18.8in)
290.2mm(11.4in)
15.5mm(0.6in)
412mm(16.2in)
470mm(18.5in)

1020mm(40.2in)
700mm(27.6in)
150mm(5.9in)
130mm(5.1in)
433mm(17in)
253mm(10in)
33.9mm(1.3in)
143.8mm(5.7in)
151.9mm(6in)
126.2mm(5in)
1694.5mm(66.7in)
1650mm(65in)
1800mm(70.9)
1337.5mm(52.7in)
1150mm(45.3in)
985.5mm(38.6in)
717.9mm(28.1in)
525mm(20.7in)
150mm(5.9in)
775mm(30.5in)
Schneider Electric
Schneider StarCharge Fast

470mm(18.5)
255mm(10in)
1500
119.5mm(4.66in)
161mm(6.3in)
127.1mm(4.9in)
89.6mm(3.5in)
229mm(9in)
170mm(6.7in)
76mm(2.7in)
279mm(11in)
483.5mm(19in)
235mm(9.3in)
792mm(31.2in)
412mm(16.2in)

Schneider Electric

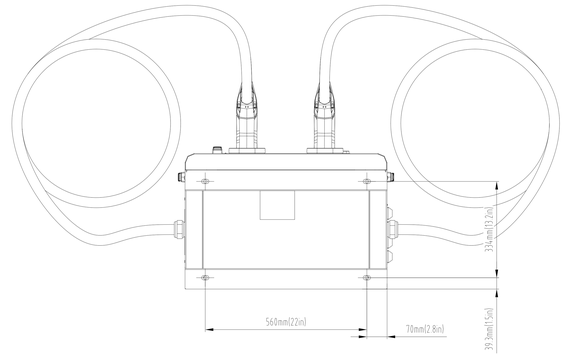
334mm(13.2in)
560mm(22in)
70mm(2.8in)
39.9mm(1.5in)

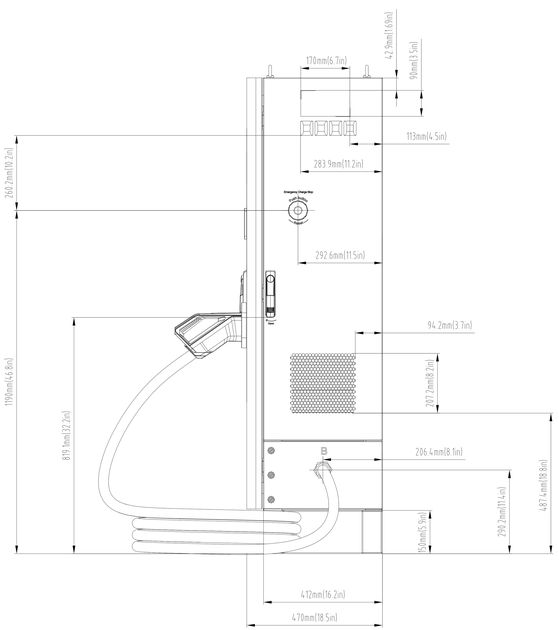
170mm(6.7in)
42.9mm(1.69in)
90mm(3.5in)
113mm(4.5in)
283.9mm(11.2in)
260.2mm(10.2in)
Emergency Charge Stop
292.6mm(11.5in)
94.2mm(3.7in)
1190mm(46.8in)
207.2mm(8.2in)
819.9mm(32.2in)
B
206.4mm(8.1in)
487.4mm(19.8in)
299.7mm(11.4in)
150mm(5.9in)
412mm(16.2in)
470mm(18.5in)

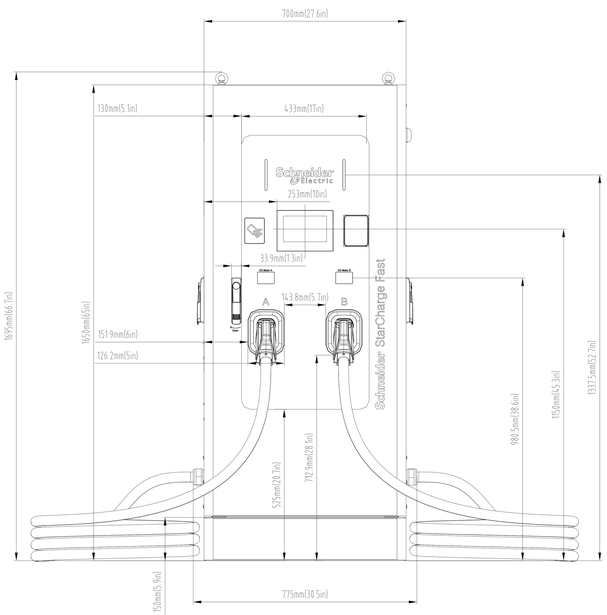
700mm(27.6in)
130mm(5.1in)
433mm(17in)
Schneider Electric
253mm(10in)
33.9mm(1.3in)
143.8mm(5.7in)
A
B
Schneider StarCharge Fast
1695mm(66.7in)
165.6mm(6.5in)
151.9mm(6in)
126.2mm(5in)
1337.5mm(52.7in)
1150mm(45.3in)
980.5mm(38.6in)
715.9mm(28.1in)
525mm(20.7in)
150mm(5.9in)
775mm(30.5in)

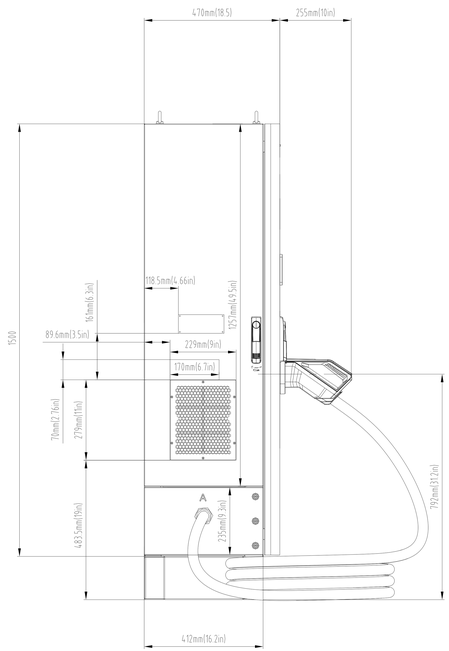
470mm(18.5)
255mm(10in)
118.5mm(4.66in)
163mm(6.4in)
125mm(4.9in)
1500
89.6mm(3.5in)
229mm(9in)
170mm(6.7in)
70mm(2.76in)
279mm(11in)
A
235mm(9.3in)
483.5mm(19in)
793mm(31.2in)
412mm(16.2in)

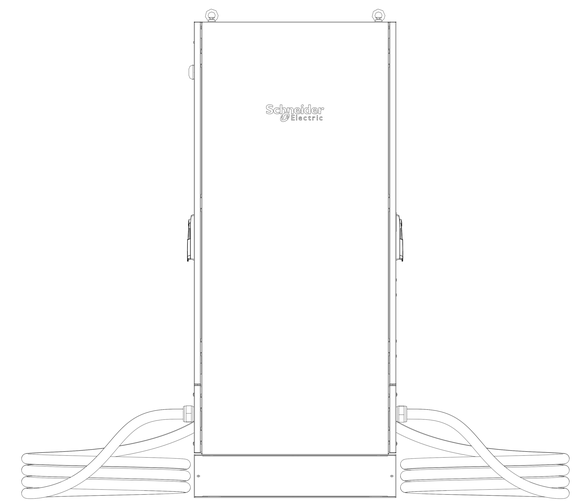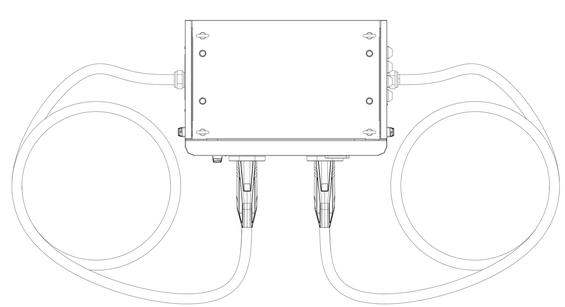
Schneider Electric