Variable speed drives

Altivar 71

Catalogue
October

07

For 3-phase motors from 0.37 to 630 kW

a brand of Schneider Electric

Telemecanique

Simply Smart !

telemecanique.com

This international site allows you to access all the Telemecanique products in just 2 clicks via comprehensive range data-sheets, with direct links to:

- Complete library: technical documents, catalogs, certi cates, FAQs, brochures...
- Selection guides from the e-catalog.
- Product discovery sites and their Flash animations.

You will also nd illustrated overviews, news to which you can subscribe, a discussion forum, the list of country contacts...
To live automation solutions every day!

Flexibility

- Interchangeable modular functions, to better meet the requirements for extensions
- Software and accessories common to multiple product families

Compactness

- High functionality in a minimum of space
- Freedom inimplementation

Ingenuity

- Auto-adapts to its environment, “plug & play”
- Application functions, control, communication and diagnostics embedded in the products
- User-friendly operation either directly on the product or remotely

Openness

- Compliance with eld bus, connection, and software standards
- Enabling decentralised or remote surveillance via the web with Transparent Ready products

Simplicity

- Cost effective “optimum” offers that make selection easy for most typical applications
- Products that are easy to understand for users, electricians and automation specialists
- User-friendly intuitive programming

Contents

Variable speed drives
Altivar 71

Selection guide . . . . . *page 2*

■ **Presentation** . . . . . *page 4*

■ **Variable speed drives**

- characteristics . . . . . *page 10*
- operation . . . . . *page 18*
- UL type 1/IP 20 and UL type 12/IP 54 variable speed drives . . . . . *page 22*
- accessories for UL type 1/IP 20 and UL type 12/IP 54 variable speed drives . . . . . *page 26*
- pre-equipped IP 54 floor-standing enclosure kit . . . . . *page 39*
- IP 23 or IP 54 floor-standing enclosure compact version . . . . . *page 52*
- UL Type 12/IP 54 drives with Vario . . . . . *page 78*
- IP 54 floor-standing enclosure with separate air flows . . . . . *page 86*

■ **Options**

- dialogue . . . . . *page 108*
- encoder interface cards . . . . . *page 110*
- I/O extension cards . . . . . *page 114*
- “Controller Inside” programmable card . . . . . *page 116*
- communication buses and networks . . . . . *page 124*
- resistance braking units . . . . . *page 134*
- braking resistors . . . . . *page 136*
- hoist resistors . . . . . *page 138*
- network braking units . . . . . *page 148*
- reduction of current harmonics:
  - DC chokes . . . . . *page 155*
  - line chokes . . . . . *page 160*
  - passive filters . . . . . *page 162*
  - additional EMC input filters . . . . . *page 168*
- output filters:
  - motor chokes . . . . . *page 172*
  - sinus filters . . . . . *page 175*

■ **Combinations of variable speed drives and options** . . . . . *page 176*

■ **Dimensions** . . . . . *page 188*

■ **Schemes** . . . . . *page 218*

■ **Motor starters** . . . . . *page 242*

■ **Mounting recommendations** . . . . . *page 250*

■ **Combinations of functions and applications** . . . . . *page 266*

■ **Functions** . . . . . *page 268*

■ **Compatibility table for functions** . . . . . *page 300*

■ **PowerSuite software workshop** . . . . . *page 302*

■ **Communication via ModBus TCP Network** . . . . . *page 306*

■ **Communication via Fipio bus** . . . . . *page 312*

■ **Communication via Modbus serial link** . . . . . *page 316*

■ **Communication via Modbus Plus network** . . . . . *page 320*

■ **Communication via Uni-Telway serial link** . . . . . *page 324*

■ **Communication gateways LUF P** . . . . . *page 326*

■ Procuct references index . . . . . *page 328*

Variable speed drives for asynchronous and synchronous motors

Type of machine		Simple machines		Pumps and fans (building (HVAC) *(1)*
Power range for 50…60 Hz (kW) line supply		**0.18…2.2**	**0.18…15**	**0.75…75**
	Single-phase 100…120 V (kW)	0.18…0.75	–	–
	Single-phase 200…240 V (kW)	0.18…2.2	0.18…2.2	–
	Three-phase 200…230 V (kW)	0.18…2.2	–	–
	Three-phase 200…240 V (kW)	–	0.18…15	0.75…30
	Three-phase 380…480 V (kW)	–	–	0.75…75
	Three-phase 380…500 V (kW)	–	0.37…15	–
	Three-phase 525…600 V (kW)	–	0.75…15	–
	Three-phase 500…690 V (kW)	–	–	–
Drive	Output frequency	0.5…200 Hz	0.5…500 Hz	0.5…200 Hz
	Type of control – Asynchronous motor	Sensorless flux vector control		Sensorless flux vector control, voltage/frequency ratio (2 points), energy saving ratio
	Type of control – Synchronous motor	–		–
	Transient overtorque	150…170% of the nominal motor torque	180% of the nominal motor torque for 2 seconds	110% of the nominal motor torque
Functions	Number of functions	26	50	50
	Number of preset speeds	4	16	7
Number of I/O	Analog inputs	1	3	2
	Logic inputs	4	6	3
	Analog outputs	–	1	1
	Logic outputs	1	–	–
	Relay outputs	1	2	2
Communication	Integrated	–	Modbus and CANopen	Modbus
	Available as an option	–	Modbus TCP, DeviceNet, Fipio, PROFIBUS DP	LonWorks, METASYS N2, APOGEE FLN, BACnet
Cards (available as an option)		–	–	–
Standards and certifications		IEC/EN 61800-5-1, IEC/EN 61800-3 (environments 1 and 2)		
		EN 55011: Group 1, class A and class B. CE, UL, CSA, C-Tick, N998	EN 55011: Group 1, class A and class B with option card, CE, UL, CSA, C-Tick, N998	EN 55011: Group 1, class A and class B with option card, CE, UL, CSA, C-Tick, NOM 117
References		**ATV 11**	**ATV 31**	**ATV 21**
Pages		Please consult our “Soft starters and variable speed drives” catalogue		

(1) Heating, Ventilation and Air Conditioning

Pumps and fans (industrial)	Complex machines
0.37…800	**0.37…630**
–	–
0.37…5.5	0.37…5.5
–	–
0.75…90	0.37…75
0.75…630	0.75…500
–	–
–	–
2.2…800	1.5…630
0.5…500 Hz for the entire range 0.5…1000 Hz up to 37 kW at 200…240 V ∿ and 380…480 V ∿	1…500 Hz across the entire range 1…1600 Hz up to 37 kW at 200…240 V ∿ and 380…480 V ∿
Sensorless flux vector control, voltage/frequency ratio (2 or 5 points), energy saving ratio	Sensor/sensorless flux vector control, voltage/frequency ratio (2 or 5 points), ENA System
–	Vector control with or without speed feedback
120...130% of the nominal motor torque for 60 seconds	220% of the nominal motor torque for 2 seconds 170% for 60 seconds
> 100	> 150
8	16
2…4	2…4
6…20	6…20
1…3	1…3
0…8	0…8
2…4	2…4
Modbus and CANopen	
Modbus TCP, Fipio, Modbus/Uni-Telway, Modbus Plus, EtherNet/IP, DeviceNet, PROFIBUS DP, InterBus, CC-Link, LonWorks, METASYS N2, APOGEE FLN, BACnet	Modbus TCP, Fipio, Modbus/Uni-Telway, Modbus Plus, EtherNet/IP, DeviceNet, PROFIBUS DP, InterBus, CC-Link
I/O extension cards, "Controller Inside" programmable card, multi-pump cards	Interface cards for incremental, resolver or absolute encoders, I/O extension cards, "Controller Inside" programmable card
IEC/EN 61800-5-1, IEC/EN 61800-3 (environments 1 and 2, C1 to C3), EN 55011, IEC/EN 61000-4-2/4-3/4-4/4-5/4-6/4-11 CE, UL, CSA, DNV, C-Tick, NOM 117, GOST	
ATV 61	**ATV 71**
Please consult our "Altivar 61 speed drives" catalogue and our "Soft starters and variable speed drives" catalogue	22 to 25

Variable speed drives
Altivar 71

536799

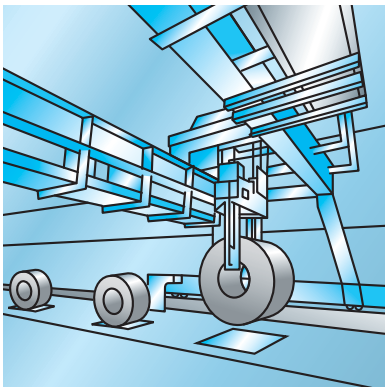

Hoisting application

536800

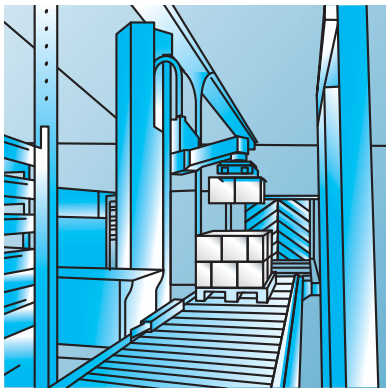

Packing application

536801

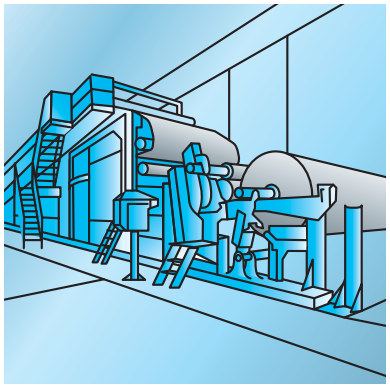

Process machinery application

Applications

With its different types of motor control and numerous integrated functions, the Altivar 71 range of variable speed drives meets the most stringent requirements. It is suitable for the most demanding drive systems:

- Torque and speed accuracy at very low speed, high dynamic performance with sensor/sensorless flux vector control
- Extended frequency range for high-speed motors
- Parallel connection of motors and special drives using the voltage/frequency ratio
- Static speed accuracy and energy saving for open-loop synchronous motors
- Smooth flexibility for unbalanced machines with the ENA (ENergy Adaptation) System

In conjunction with the wide voltage range for a 690 V ∿ line supply,the functions provided by the Altivar 71 drive boost performance levels and make machines more flexible to use for a large number of applications.

Hoisting

- Brake control tailored for translational, hoisting and slewing movements
- Load measurement using weight sensor
- High-speed hoisting
- Brake feedback management
- Limit switch management
- Slack sling

Handling

- Very quick response times on transmission of a command: 2 ms (± 0.5 ms)
- Reference via pulse train or differential analog input
- Control via the principal communication networks
- Position control via limit switches with time optimization at low speed
- Multiple parameter settings via parameter set switching

Packing

- Up to 50 Hz of the bandwidth
- Very quick response times on change of reference: 2 ms (± 0.5 ms)
- Control via integrated CANopen machine bus
- Position control via limit switches

Textile machines

- High-resolution digital speed reference (1/32000)
- Speed accuracy ensured on the basis of a synchronous motor, irrespective of load
- High bandwidth
- Spooling function
- Connection to common DC bus
- Control of both asynchronous and synchronous motors supported
- High-performance speed loop

Wood-working machines

- Operation up to 1600 Hz
- Fastest possible controlled stop on loss of line supply
- Control via integrated CANopen machine bus
- Protection of motor against overvoltages

Process machines

- PID regulator
- High-resolution references
- Speed or torque control
- Connection to the principal communication networks
- Separate control section power supply
- Braking unit via re-injection to the line supply
- Connection to common DC bus

Lifts

- Brake control tailored for passenger comfort
- Processing of load measurement by weight sensor
- Conformity of relays to lift safety standard EN 81-13-2-2-3
- Connection to CANopen machine bus
- Control and integrity check of output contactor
- Lift car clearance function
- Control of both asynchronous and synchronous motors supported
- Lift macro-configuration

Characteristics: pages 10 to 17
References: pages 22 to 25
Dimensions: pages 188 to 217
Schemes: pages 218 to 241
Functions: pages 268 to 299

537093

ATV 71HC28N4,
ATV 71HD37M3X, ATV 71HU22N4

Comprehensive offer

The Altivar 71 range of variable speed drives covers various motor power ratings from 0.37 kW to 630 kW with three types of power supply:
- 200…240 V single-phase, 0.37 kW to 5.5 kW, UL Type 1/IP 20, (**ATV 71H●●●M3**)
- 200…240 V three-phase, 0.37 kW to 75 kW, UL Type 1/IP 20, (**ATV 71H●●●M3** and **ATV 71H●●●M3X**)
- 380…480 V three-phase, 0.75 kW to 500 kW, UL Type 1/IP 20, (**ATV 71H●●●N4**)
- 500…690 V three-phase, 1.5 kW to 630 kW, UL Type 1/IP 20, (**ATV 71H●●●Y**)

This range can be used for controlling asynchronous motors in sensor/sensorless flux vector control mode as well as synchronous motors with sinusoidal electromotive force when there is no speed feedback.
At 200…240 V ∿ and 380…480 V ∿, there is a special version available that can be used for controlling synchronous motors with sinusoidal electromotive force when there is speed feedback.
Control of the motors referred to above is still supported (see pages 22, 23 and 110).
All the options supported by the Altivar 71 range of variable speed drives are also available with this version when an identical rating is used.

The Altivar 71 drive integrates the Modbus and CANopen protocols as standard, as well as numerous functions. These functions can be extended using communication option cards, I/O extension cards, a "Controller Inside" programmable card or an encoder interface option card, see page 9.

External options such as braking resistors, resistance braking units and filters complete the offer, see page 9.

The entire range conforms to international standards IEC/EN 61800-5-1, IEC/EN 61800-2, IEC/EN 61800-3, is UL, CSA, DNV, C-Tick, NOM 117 and GOST certified and has been developed to meet the requirements of directives regarding the protection of the environment (RoHS, WEEE, etc.) as well as those of European Directives (CE marking).

Functional safety and ATEX applications *(1)*

The Altivar 71 variable speed drive features a safety function that is designed to ensure a motor stop and prevent accidental restarts.
This Power Removal safety function means that the drive can be installed as part of the safety system for an electrical/electronic/programmable electronic control system in order to ensure the safety of a machine or industrial process.
This function meets the requirements of category 3 of the EN 954-1 machine safety standard, SIL 2 of IEC/EN 61508 and the standard dealing with the functional safety requirements of power drive products: IEC/EN 61800-5-2.

The Power Removal function also enables the Altivar 71 variable speed drive to offer protection for motors that are installed in explosive atmospheres (ATEX), see pages 220 and 221.

Electromagnetic compatibility

Reducing harmonics and observing requirements in respect of electromagnetic compatibility were considered right from the design stage.
The incorporation of EMC filters in **ATV 71H●●●M3**, **ATV 71●●●●N4, ATV 71H●●●Y, ATV 71P●●●N4Z** drives and the recognition of EMC requirements facilitates installation and provides an economical means of ensuring machines meet CE marking requirements.

The **ATV 71H●●●M3X** drives have been designed without an EMC filter. Filters are available as an option and can be installed by the user to reduce emission levels, see pages 166 to 169.

(1) Please refer to the ATEX guide available on our website at "www.telemecanique.com".

107473

ATV 71W075N4

PF524498

Kit VW3 A9 544

PF536936

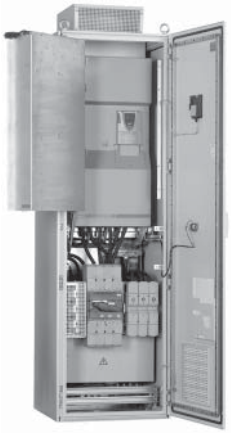

ATV 71EXC2●●●N4

107481

ATV 71PU40N4Z

Standard versions

The Altivar 71 UL Type1/IP 20 range of variable speed drives offers various standard versions.

Versions with IP 54 degree of protection for difficult environments

To meet the requirements of applications in difficult environments (dusty, humid, etc.), drives can be supplied individually or inside a floor-standing enclosure:

■ A drive version with UL Type 12/IP 54 degree of protection (see page 24):
□ 380…480 V ∿, 0.75 kW to 75 kW (**ATV 71W●●●N4**)

■ A drive version with UL Type 12/IP 54 degree of protection and featuring a Vario switch disconnector (see pages 76 to 79):
□ 380…480 V ∿ , 0.75 to 75 kW (**ATV 71E5●●●N4**)

■ A drive version ready-assembled in an IP 54 floor-standing enclosure (see pages 80 to 93):
□ 380…415 V ∿ , 90 kW to 500 kW (**ATV 71EXS5●●●N4**)
□ 500 V and 600…690 V ∿ , 90 kW to 630 kW (**ATV 71EXS5●●●N** and **ATV 71EXS5●●●Y**)
The **ATV 71EXS5●●●N4**, **ATV 71EXS5●●●N** and **ATV 71EXS5●●●Y** products have been designed for easy set-up in highly polluted environments and, in particular, to ensure optimum enclosure ventilation by keeping the control and power air circuits separate.

■ A preassembled kit for creating an IP 54-certified floor-standing enclosure (see pages 36 to 45):
This straightforward and cost-effective solution, which is available by quoting a single reference, provides you with all the mechanical components you need to create an IP 54 floor-standing enclosure (**VW3 A9 541**…**VW3 A9 551**).
This product has been designed for compatibility with Altivar 71 UL Type 1/IP 20 drives, 90 kW to 500 kW at 380…480 V ∿ (ATV 71HD90N4…HC50N4).

Compact floor-standing enclosure versions for industrial environments and infrastructure contexts

The following product is available to facilitate set-up in industrial environments and infrastructure contexts (tunnels, treatment plants, etc.):
■ A drive version ready-assembled in an IP 23 or IP 54 compact floor-standing enclosure (see pages 46 to 59):
□ 380…415 V ∿ , 90 kW to 500 kW (**ATV 71EXC●●●●N4**)
□ 500 V ∿ , 90 kW to 630 kW (**ATV 71EXC●●●●N**)
□ 600…690 V ∿ , 90 kW to 630 kW (**ATV 71EXC●●●●Y**)

Version for environments where no ventilation is permitted

Thefollowing product is available to meet the requirements of applications where the necessary degree of protection rules out the possibility of ventilation:
■ **A drive on base plate version:**
□ 380…480 V ∿ , 0.75 to 11 kW (**ATV 71P●●●N4Z**), see page 24

As the drive is not equipped with a fan as standard, a DC choke (see page 155) must be added in order to prevent overheating during operation.
In environments supporting the use of ventilation, the DC choke (see page 155) must be replaced by a fan (see page 31).

DF536808

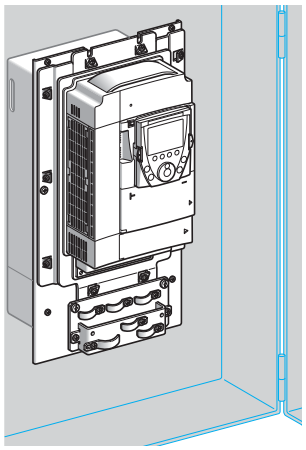

ATV 71HU75N4 flush-mounted

Mounting options

The Altivar 71 drive can be mounted in a variety of ways for integration into machines.

Mounting outside enclosure

The standard version of the Altivar 71 (on heatsink) or the base plate version can be mounted directly on a wall without having to be installed inside an enclosure.
UL Type 1 conformity can be achieved using kit **VW3 A9 2●●**, and IP 21 or IP 31 using kit **VW3 A9 1●●** (see pages 32 and 33).

Flush-mounting in a dust-proof and damp-proof enclosure

The Altivar 71 drive has been designed to optimize the size of enclosures (floor-standing, wall-mounted, etc).
This type of flush-mounting can be used to reduce the size of enclosure required and to limit the temperature rise inside the enclosure:
■ The power section, with IP 54 degree of protection, can be easily mounted outside the enclosure using kit **VW3 A9 5●●** for flush-mounting in a dust-proof and damp-proof enclosure, see page 30.
■ This type of mounting can lead to ambient temperatures of up to 60°C inside the enclosure without derating.
It may be necessary to use a control card fan kit **VW3 A9 4●●** appropriate for the drive rating in order to avoid hot spots, see page 27
■ This option permits mounting side-by-side, see pages 250 and 253.

DF538809

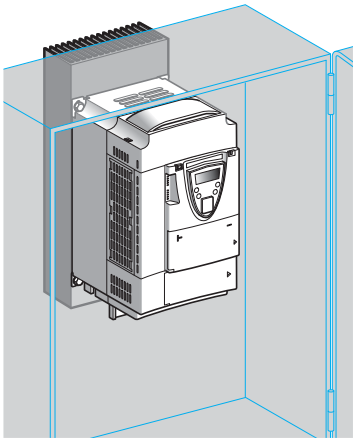

ATV 71PU75N4Z in dust and damp proof enclosure

Mounting in a dust-proof and damp-proof enclosure or on machine frame

The Altivar 71 drive on base plate supports two mounting options:
■ In a dust-proof and damp-proof enclosure, using kit **VW3 A9 80●** for dust-proof and damp-proof mounting (see page 31), which has been designed to dissipate heat via a heatsink mounted outside the enclosure
■ On a machine frame, where this frame's earth allows the heat to be dissipated

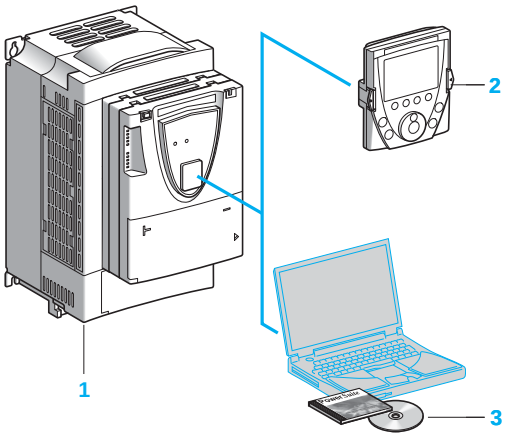

Dialogue tools

The Altivar 71 1 is supplied with a remote graphic display terminal 2:
- The navigation button can be used to access the drop-down menus quickly and easily.
- The graphic screen displays 8 lines of 24 characters of plain text.
- The advanced functions on the display unit can be used to access the more complex drive functions with ease.
- The display screens, menus and parameters can all be customized for the user or the machine.
- Online help screens are available.
- Configurations can be stored and downloaded (four configuration files can be stored).
- The drive can be connected to several other drives via a multidrop link.
- It can be located remotely on a floor-standing enclosure door with IP 54 or IP 65 degree of protection (UL Type 1/IP 20 drives) or built in (UL Type12/IP 54 drives).
- It is supplied with six languages installed as standard (Chinese, English, French, German, Italian and Spanish). Other languages can be loaded to the flash memory.

Up to 15 kW at 200…240 V ∿ and 75 kW at 380…480 V ∿, the Altivar 71 can be controlled using an integrated 7-segment display terminal, see pages 22 and 23.
At all ratings from 500…690 V ∿, the drive is supplied with an integrated 7-segment display terminal and a remote graphic display terminal.

The PowerSuite software workshop 3 can be used to configure, adjust, test and maintain the Altivar 71 in the same way as for all other Telemecanique variable speed drives and starters. It can be used via a direct connection, Ethernet, modem or a Bluetooth® wireless connection.

536803

RUN	Term	+50.00Hz	5.4A
1.1 SIMPLY START			
Cde 2 fils/3 fils	:		**Cde 2 fils**
Macro-configuration	:		Manutention
Standard fréq. mot	:		50Hz IEC
Puissance nom. mot	:		2.2kW
Tension nom. mot	:		400V
Code	<<	>>	Quick

Quick programming:
"Simply Start" menu

536804

SCF1	Term	+50.00Hz	0.0A
HISTORIQUE DEFAUTS			
Court-circuit mot.			
Surintensité			
Déf. Externe LI			
Surtension réseau			
Soustension			
Help			Quick

Services:
Fault log

536805

SCF1	Term	+50.00Hz	0.0A
COURT-CIRCUIT MOTEUR			
Vérifier les câbles de liaison			
et l'isolement du moteur.			
Effectuer un test de diagnostic			
			Quick

Services:
Troubleshooting screen

Quick programming

Macro-configuration
The Altivar 71 offers quick and easy programming using macro-configurations corresponding to different applications or uses: start-stop, handling, hoisting, general use, connection to communication networks, PID regulator, master/slave and lift applications (for synchronous motors with speed feedback).
Each of these configurations is still fully modifiable.

Simply Start menu
The Simply start menu can be used to ensure that the application is working correctly, maximize motor performance and ensure motor protection.

The architecture, the hierarchical parameter structure and the direct access functions all serve to make programming quick and easy, even for the more complex functions.

Services

The Altivar 71 has numerous built-in maintenance, monitoring and diagnostic functions:
- Built-in drive test functions with diagnostic screen on the remote graphic display terminal
- I/O maps
- Communication maps for the different ports
- Oscilloscope function that can be viewed using the PowerSuite software workshop
- Management of the drive installed base via microprocessors with flash memory
- Remote use of these functions by connecting the drive to a modem via the Modbus port
- Identification of all the drive's component parts as well as the software versions
- Fault logs that can display the values for up to 16 variables in the event of a fault
- Display terminal languages loaded in the flash memory
- A message of up to 5 lines of 24 characters can be stored in the drive.

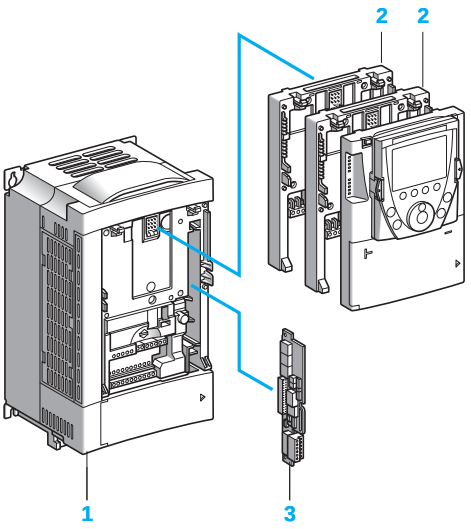

Options

The Altivar 71 drive 1 can accommodate a maximum of three option cards simultaneously, comprising:
■ 2 from the following list *(1)*:
□ I/O extension cards 2, see pages 114 and 115
□ Communication cards 2 (Modbus TCP, Fipio, Modbus/Uni-Telway, Modbus Plus, EtherNet/IP, DeviceNet, PROFIBUS DP, etc.), see pages 124 to 133
□ "Controller Inside" programmable card 2 This is used to adapt the drive to specific applications quickly and progressively, by decentralizing the control system functions (programming in IEC/EN 61131-3 languages), see pages 116 to 123
■ 1 encoder interface card 3 (with RS 422-compatible differential outputs; with open collector outputs (NPN); with push-pull outputs; resolver; with SinCos, SinCos Hiperface®, EnDat®, or SSI universal outputs; with RS 422-compatible differential outputs plus encoder emulation (RS 422 ESIM)), see pages 110 to 113

Various external options can be combined with the Altivar 71:
■ Braking units and resistors (standard or hoist-specific), see pages 134 to 147
■ Network braking units, see pages 148 to 151
■ DC chokes, line chokes and passive filters (to reduce harmonic currents), see pages 152 to 165
■ Additional EMC input filters, see pages 166 to 169
■ Motor chokes and sinus filters for long cable runs or to remove the need for shielding, see pages 170 to 175

***Note:** Please refer to the compatibility summary tables to determine which options are available for individual drives, see pages 176 to 187.*

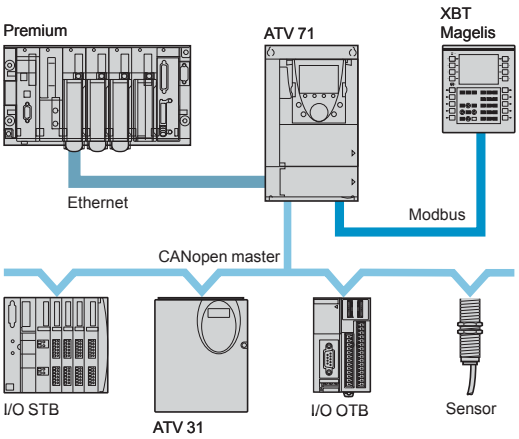

Example of a drive equipped with a communication card and a "Controller Inside" programmable card

Integration into control systems

The Altivar 71 features a combined Modbus or CANopen port for quick, accurate motion control, adjustment, monitoring and configuration. A second port is available for connecting a Magelis terminal for machine dialogue.

The Altivar 71 can also be connected to other communication networks using the communication option cards. The following communication protocols are supported: Modbus TCP, Fipio, Modbus, Uni-Telway, Modbus Plus, EtherNet/IP, DeviceNet, PROFIBUS DP, InterBus and CC-Link (see pages 124 to 133).

The fact that the control section can be powered separately means that communication (monitoring, diagnostics) can be maintained even if there is no power supply to the control section.

The "Controller Inside" programmable card transforms the drive into an automation island:
■ The card features its own I/O; it can also manage those of the drive and an I/O extension card.
■ It contains onboard application programs developed in IEC/EN 61131-3 languages, which reduce the control system response time.
■ Its CANopen master port enables control of other drives and dialogue with I/O modules and sensors.

(1) The Altivar 71 cannot support more than one option card with the same reference.

Environmental characteristics

Conformity to standards		Altivar 71 drives have been developed to conform to the strictest international standards and the recommendations relating to electrical industrial control devices (IEC, EN), in particular: low voltage, IEC/EN 61800-5-1, IEC/EN 61800-3 (conducted and radiated EMC immunity and emissions).
EMC immunity		IEC/EN 61800-3, environments 1 and 2 IEC/EN 61000-4-2 level 3; IEC/EN 61000-4-3 level 3 IEC/EN 61000-4-4 level 4; IEC/EN 61000-4-5 level 3 IEC/EN 61000-4-6 level 3; IEC/EN 61000-4-11 *(1)*
Conducted and radiated EMC emissions for drives		IEC/EN 61800-3, environments 1 and 2, categories C1, C2, C3
	ATV 71H037M3…HU22M3 ATV 71H075N4…HU40N4 ATV 71P075N4Z…PU40N4Z	EN 55011 class A group 1, IEC/EN 61800-3 category C2 With additional EMC filter *(2)*: ■ EN 55011 class B group 1, IEC/EN 61800-3 category C1
	ATV 71HU30M3…HU75M3 ATV 71HU55N4…HC50N4 ATV 71PU55N4Z…PU75N4Z	EN 55011 class A group 2, IEC/EN 61800-3 category C3 With additional EMC filter *(2)*: ■ EN 55011 class A group 1, IEC/EN 61800-3 category C2 ■ EN 55011 class B group 1, IEC/EN 61800-3 category C1
	ATV 71H●●●M3X	With additional EMC filter *(2)*: ■ EN 55011 class A group 1, IEC/EN 61800-3 category C2 ■ EN 55011 class B group 1, IEC/EN 61800-3 category C1
	ATV 71H●●●Y	EN 55011 class A group 2, IEC/EN 61800-3 category C3
	ATV 71W075N4…WU40N4	EN 55011 class A group 1, IEC/EN 61800-3 category C2
	ATV 71WU55N4…WD75N4	EN 55011 class A group 2, IEC/EN 61800-3 category C3 With additional EMC filter *(2)*: EN 55011 class A group 1, IEC/EN 61800-3 category C2
CE		The drives have CE marking in accordance with the European low voltage directives (2006/95/EC) and EMC (89/336/EEC).
Product certification	ATV 71H●●●M3 ATV 71HD11M3X...HD45M3X ATV 71HD55M3XD, HD75M3XD ATV 71H075N4…HD75N4 ATV 71HD90N4D…HC50N4D ATV 71H●●●Y	UL, CSA, C-Tick, NOM 117 and GOST DNV with the dedicated kit, see pages 28 and 29
	ATV 71W●●●N4	UL, CSA, C-Tick, NOM 117 and GOST
	ATV 71P●●●N4Z	UL, CSA, C-Tick, NOM 117
Maximum ambient pollution Definition of insulation	ATV 71H●●●M3 ATV 71HD11M3X, HD15M3X ATV 71H075N4…HD18N4 ATV 71P●●●N4Z	Degree 2 conforming to IEC/EN 61800-5-1
	ATV 71HD18M3X…HD75M3X ATV 71HD22N4…HC50N4 ATV 71H●●●Y ATV 71W●●●N4	Degree 2 conforming to IEC/EN 61800-5-1 Degree 3 in accordance with UL marking conforming to UL840
Degree of protection		IEC/EN 61800-5-1, IEC/EN 60529
	ATV 71H●●●M3 ATV 71HD11M3X…HD45M3X ATV 71H075N4…HD75N4 ATV 71HU22Y…HD90Y	IP 21 and IP 41 on upper part IP 20 without blanking plate on upper part of cover IP 54 on lower part (heatsink) IP 21 with accessory VW3 A9 1●●, UL Type 1 with accessory VW3 A9 2●●, see pages 32 and 33
	ATV 71HD55M3X, HD75M3X ATV 71HD90N4…HC50N4 ATV 71HC11Y…HC63Y	IP 00, IP 41 on upper part and IP 30 on front panel and side parts. IP 54 on lower part (heatsink) IP 31 with accessory VW3 A9 1●●, UL Type 1 with accessory VW3 A9 2●●, see pages 32 and 33
	ATV 71W●●●N4	UL Type 12/IP 54
Vibration resistance	ATV 71H●●●M3 ATV 71HD11M3X…HD45M3X ATV 71HU22Y…HD90Y ATV 71H075N4…HD75N4 ATV 71W●●●N4 ATV 71P●●●N4Z	1.5 mm peak to peak from 3…13 Hz, 1 gn from 13…200 Hz, conforming to IEC/EN 60068-2-6
	ATV 71HD55M3X, HD75M3X ATV 71HD90N4…HC50N4 ATV 71HC11Y…HC63Y	1.5 mm peak to peak from 3…10 Hz, 0.6 gn from 10…200 Hz, conforming to IEC/EN 60068-2-6

***Note** : Unless specifically indicated on pages 10 to 17, the characteristics of drives with a "S337","337", "383" or "A24" variant are identical, at equivalent ratings, to the standard drive.*

(1) Drive behaviour according to the drive configurations, see pages 285, 288, 289, 297 and 298.
(2) See table on page 166 to check permitted cable lengths.

Environmental characteristics (continued)

Shock resistance	ATV 71H●●●M3 ATV 71HD11M3X…HD45M3X ATV 71H075N4…HD75N4 ATV 71HU22Y…HD90Y ATV 71W●●●N4 ATV 71P●●●N4Z		15 gn for 11 ms conforming to IEC/EN 60068-2-27
	ATV 71HD55M3X, HD75M3X ATV 71HD90N4…HC13N4 ATV 71HC11Y…HC16Y		7 gn for 11 ms conforming to IEC/EN 60068-2-27
	ATV 71HC16N4…HC50N4 ATV 71HC20Y…HC63Y		4 gn for 11 ms conforming to IEC/EN 60068-2-27
Environmental conditions Use	ATV 71H●●●M3, ATV 71HD11M3X...HD45M3X ATV 71H075N4…HD75N4 ATV 71P●●●N4Z		IEC 60721-3-3 classes 3C1 and 3S2
	ATV 71H●●●M3S337 ATV 71HD11M3X337... HD45M3X337 ATV 71HD55M3X, HD75M3X ATV 71H075N4S337… HD75N4S337 ATV 71HD90N4…HC50N4 ATV 71H●●●Y ATV 71W●●●N4 ATV 71W●●●N4A24		IEC 60721-3-3 class 3C2
Relative humidity			5…95% without condensation or dripping water conforming to IEC 60068-2-3
Ambient air temperature around the unit	Operation	**°C**	For ATV 71H●●●●● and ATV 71P●●●N4Z drives: - 10…+ 50 without derating Up to + 60°C with derating and with the control card fan kit VW3 A9 4●● corresponding to the drive rating. For ATV 71W●●●●● drives: - 10…+ 50 without derating. See the derating curves on pages 251, 252, 254 to 258 and 265.
	Storage	**°C**	- 25…+ 70
Maximum operating altitude	ATV 71H●●●M3 ATV 71H●●●M3X ATV 71H●●●N4 ATV 71P●●●N4Z	**m**	1000 without derating 1000…3000 derating the current by 1% per additional 100 m. Limited to 2000 m for the “Corner Grounded” distribution network
	ATV 71H●●●Y	**m**	1000 without derating 1000…2260 derating the current by 1% per additional 100 m.
Operating position Maximum permanent angle in relation to the normal vertical mounting position			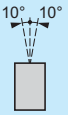

Drive characteristics

Output frequency range	ATV 71H●●●M3 ATV 71HD11M3X…HD37M3X ATV 71H075N4…HD37N4 ATV 71W075N4…WD37N4 ATV 71P●●●N4Z	**Hz**	0…1600
	ATV 71HD45M3X…HD75M3X ATV 71HD45N4…HC50N4 ATV 71H●●●Y ATV 71WD45N4…WD75N4	**Hz**	0…500
Configurable switching frequency	ATV 71H●●●M3 ATV 71HD11M3X, HD15M3X ATV 71H075N4…HD30N4 ATV 71W075N4…WD30N4 ATV 71P075N4Z…PD11N4Z	**kHz**	Nominal switching frequency: 4 kHz without derating in continuous operation. Adjustable during operation from 1…16 kHz Above 4 kHz, see the derating curves on pages 251 and 265.
	ATV 71HD18M3X, HD45M3X ATV 71HD37N4…HD75N4 ATV 71WD37N4…WD75N4	**kHz**	Nominal switching frequency: 2.5 kHz without derating in continuous operation. Adjustable during operation from 1…16 kHz Above 2.5 kHz, see the derating curves on pages 251 and 265
	ATV 71HD55M3X, HD75M3X ATV 71HD90N4…HC50N4	**kHz**	Nominal switching frequency: 2.5 kHz without derating in continuous operation. Adjustable during operation from 2.5…8 kHz Above 2.5 kHz, see the derating curves on pages 254 to 256
	ATV 71HU22Y…HD30Y	**kHz**	Nominal switching frequency: 4 kHz without derating in continuous operation. Adjustable during operation from 2.5…6 kHz Above 4 kHz, see the derating curves on page 252
	ATV 71HD37Y…HC63Y	**kHz**	Nominal switching frequency: 2.5 kHz without derating in continuous operation. Adjustable during operation from 2.5…4.9 kHz Above 2.5 kHz, see the derating curves on pages 252 and 258
Speed range	ATV 71H●●●M3 ATV 71H●●●M3X ATV 71●●●●N4 ATV 71H●●●Y ATV 71P●●●N4Z		Asynchronous motor: ■ 1…1000 in closed-loop mode with encoder feedback ■ 1…100 in open-loop mode without speed feedback Synchronous motor: ■ 1…50 in open-loop mode without speed feedback
	ATV 71H●●●M3383 ATV 71H●●●M3X383 ATV 71H●●●N4383		Asynchronous motor: ■ 1…1000 in closed-loop mode with encoder feedback ■ 1…100 in open-loop mode without speed feedback Synchronous motor: ■ 1…1000 in closed-loop mode with encoder feedback ■ 1…50 in open-loop mode without speed feedback
Speed accuracy	For a torque variation of 0.2 Tn to Tn		± 0.01% of nominal speed, in closed-loop mode with encoder feedback ± 10% of nominal slip, without speed feedback
Torque accuracy			± 5% in closed-loop mode with encoder feedback ± 15% in open-loop mode without speed feedback
Transient overtorque			170% of the nominal motor torque (typical value at ± 10%) for 60 s 220% of the nominal motor torque (typical value at ± 10%) for 2 s
Braking torque			30% of nominal motor torque without braking resistor (typical value) Up to 150% with braking or hoist resistor installed as an option, see pages 137 and 139
Maximum transient current			150% of the nominal drive current for 60 s (typical value) 165% of the nominal drive current for 2 s (typical value)
Permanent torque at 0 Hz	ATV 71H037M3…HD45M3X ATV 71H075N4…HD75N4 ATV 71HU22Y…HD90Y ATV 71W●●●N4 ATV 71P●●●N4Z		The Altivar 71 drive can continuously supply the peak value of the nominal drive current
	ATV 71HD55M3X, HD75M3X ATV 71HD90N4…HC50N4 ATV 71HC11Y…HC63Y		The Altivar 71 drive can continuously supply 80% of the peak value of the nominal drive current
Motor control profile	ATV 71H●●●M3 ATV 71H●●●M3X ATV 71●●●●N4 ATV 71H●●●Y ATV 71P●●●N4Z		Asynchronous motor: ■ Flux Vector Control (FVC) with sensor (current vector) ■ Sensorless Flux Vector Control (SFVC) (voltage or current vector) ■ Voltage/frequency ratio (2 or 5 points) ■ ENA (Energy Adaptation) System for unbalanced loads Synchronous motor: ■ Vector control without speed feedback
	ATV 71H●●●M3383 ATV 71H●●●M3X383 ATV 71H●●●N4383		Asynchronous motor: ■ Flux Vector Control (FVC) with sensor (current vector) ■ Sensorless Flux Vector Control (SFVC) (voltage or current vector) ■ Voltage/frequency ratio (2 or 5 points) ■ ENA (Energy Adaptation) System for unbalanced loads Synchronous motor: ■ Vector control with speed feedback ■ Vector control without speed feedback
Frequency loop			PI regulator with adjustable structure for a speed response adapted to the machine (accuracy, speed)
Slip compensation			Automatic whatever the load. Can be suppressed or adjusted Not available in voltage/frequency ratio

Electrical power characteristics

Power Supply	Voltage	**V**	200 - 15%...240 + 10% single phase for ATV 71H075M3...HU75M3 200 - 15%...240 + 10% three-phase for ATV 71H●●●M3 and ATV 71H●●●M3X 380 - 15%...480 + 10% three-phase for ATV 71●●●●N4 and ATV 71P●●●N4Z 500 - 15%…690 + 10% three-phase for ATV 71H●●●Y
	Frequency	**Hz**	50 - 5%...60 + 5%
Signalling			1 red LED: LED lit indicates the presence of drive voltage
Output voltage			Maximum three-phase voltage equal to line supply voltage
Drive noise level			Conforming to directive 86-188/EEC
	ATV 71H037M3…HU15M3 ATV 71H075N4…HU22N4 ATV 71W075N4…WU22N4	**dBA**	43
	ATV 71HU22M3…HU40M3 ATV 71HU30N4, HU40N4 ATV 71WU30N4, WU40N4	**dBA**	54.5
	ATV 71HU55M3 ATV 71HU55N4, HU75N4 ATV 71WU55N4, WU75N4	**dBA**	55.6
	ATV 71HU75M3 ATV 71HD11N4 ATV 71WD11N4	**dBA**	57.4
	ATV 71HD11M3X, HD15M3X ATV 71HD15N4, HD18N4 ATV 71WD15N4, WD18N4	**dBA**	60.2
	ATV 71HD18M3X, HD22M3X ATV 71HD22N4 ATV 71HU22Y…HD30Y ATV 71WD22N4	**dBA**	59.9
	ATV 71HD30M3X…HD45M3X, ATV 71HD30N4, HD37N4 ATV 71WD30N4, WD37N4	**dBA**	64
	ATV 71HD45N4…HD75N4 ATV 71HD37Y…HD90Y ATV 71WD45N4…WD75N4	**dBA**	63.7
	ATV 71HD55M3X ATV 71HD90N4	**dBA**	60.5
	ATV 71HD75M3X ATV 71HC11N4	**dBA**	69.5
	ATV 71HC13N4, HC16N4	**dBA**	66
	ATV 71HC20N4…HC50N4 ATV 71HC11Y…HC63Y	**dBA**	77
	ATV 71P075N4Z…PU22N4Z	**dBA**	0 With fan kit: 43
	ATV 71PU30N4Z, PU40N4Z	**dBA**	0 With fan kit: 54.5
	ATV 71PU55N4Z, PU75N4	**dBA**	0 With fan kit: 55.6
	ATV 71PD11N4Z	**dBA**	0 With fan kit: 57.4
Electrical isolation			Between power and control (inputs, outputs, power supplies)

Connection cable characteristics

Type of cable for	Mounting in an enclosure	Single-strand IEC cable, ambient temperature 45°C, copper 90°C XLPE/EPR or copper 70°C PVC
	Mounting in an enclosure with an IP 21 or IP 31 kit	3-strand IEC cable, ambient temperature 40°C, copper 70°C PVC
	Mounting in an enclosure with a NEMA Type 1 kit	3-strand UL 508 cable except for choke (2-strand UL 508 cable), ambient temperature 40°C, copper 75°C PVC

Connection characteristics (terminals for the power supply, the motor, the DC bus and the braking resistor)

Drive terminals		L1/R, L2/S, L3/T, U/T1, V/T2, W/T3	PC/-, PO *(1)*, PA/+	PA, PB
Maximum wire size and tightening torque	ATV 71H037M3…HU40M3 ATV 71H075N4…HU40N4 ATV 71W075N4…WU40N4 ATV 71P075N4Z…PU40N4Z	4 mm², AWG 10 1.4 Nm, 12.3 lb.in		
	ATV 71HU55M3 ATV 71HU55N4, HU75N4 ATV 71WU55N4, WU75N4 ATV 71PU55N4Z, PU75N4Z	6 mm², AWG 8 3 Nm, 26.5 lb.in		
	ATV 71HU75M3 ATV 71HD11N4 ATV 71WD11N4 ATV 71PD11N4Z	16 mm², AWG 4 3 Nm, 26.5 lb.in		
	ATV 71HD11M3X, HD15M3X ATV 71HD15N4, HD18N4 ATV 71WD15N4, WD18N4	35 mm², AWG 2 5.4 Nm, 47.7 lb.in		
	ATV 71HD18M3X, HD22M3X ATV 71HD22N4…HD37N4 ATV 71HU22Y…HD30Y ATV 71WD22N4…WD37N4	50 mm², AWG 1/0 12 Nm, 102.2 lb.in		
	ATV 71HD30M3X…HD45M3X ATV 71HD45N4…HD75N4 ATV 71HD37Y…HD90Y ATV 71WD45N4…WD75N4	150 mm², 300 MCM 41 Nm, 360 lb.in		
	ATV 71HD55M3X ATV 71HD90N4	2 x 100 mm², 2 x 250 MCM M10, 24 Nm, 212 lb.in	2 x 100 mm², 2 x 250 MCM M12, 41 Nm, 360 lb.in	60 mm², 250 MCM M8, 12 Nm, 106 lb.in
	ATV 71HD75M3X, HC11N4	2 x 100 mm², 2 x 250 MCM M10, 24 Nm, 212 lb.in	2 x 150 mm², 2 x 250 MCM M12, 41 Nm, 360 lb.in	60 mm², 250 MCM M8, 12 Nm, 106 lb.in
	ATV 71HC13N4 ATV 71HC11Y…HC16Y	2 x 120 mm², 2 x 250 MCM M10, 24 Nm, 212 lb.in	2 x 120 mm², 2 x 250 MCM M10, 24 Nm, 212 lb.in	120 mm², 250 MCM M10, 24 Nm, 212 lb.in
	ATV 71HC16N4	2 x 150 mm², 2 x 350 MCM M12, 41 Nm, 360 lb.in	2 x 150 mm², 2 x 350 MCM M12, 41 Nm, 360 lb.in	120 mm², 250 MCM M10, 24 Nm, 212 lb.in
	ATV 71HC20N4… HC28N4 ATV 71HC20Y…HC31Y	4 x 185 mm², 3 x 350 MCM M12, 41 Nm, 360 lb.in	4 x 185 mm², 3 x 350 MCM M12, 41 Nm, 360 lb.in	–
	ATV 71HC31N4	4 x 185 mm², 4 x 500 MCM M12, 41 Nm, 360 lb.in	8 x 185 mm², 4 x 500 MCM M12, 41 Nm, 360 lb.in	–
	ATV 71HC40N4	**R/L1.1, S/L2.1, T/L3.1, R/L1.2, S/L2.2, T/L3.2** 2 x 2 x 185 mm², 2 x 2 x 500 MCM M12, 41 Nm, 360 lb.in **U/T1, V/T2, W/T3** 4 x 185 mm², 4 x 500 MCM M12, 41 Nm, 360 lb.in	8 x 185 mm², 4 x 500 MCM M12, 41 Nm, 360 lb.in	–
	ATV 71HC50N4 ATV 71HC40Y…HC63Y	**R/L1.1, S/L2.1, T/L3.1, R/L1.2, S/L2.2, T/L3.2** 2 x 4 x 185 mm², 2 x 3 x 500 MCM M12, 41 Nm, 360 lb.in **U/T1, V/T2, W/T3** 6 x 185 mm², 5 x 500 MCM M12, 41 Nm, 360 lb.in	8 x 185 mm², 5 x 500 MCM M12, 41 Nm, 360 lb.in	–

(1) There is no PO terminal on ATV 71HC11Y…HC63Y drives.

Electrical control characteristics

Internal supplies available		Short-circuit and overload protection: ■ 1 x 10.5 V ⎓ ± 5% supply for the reference potentiometer (1 to 10 kΩ), maximum current 10 mA ■ 1 x 24 V ⎓ supply (min. 21 V, max. 27 V), maximum current 200 mA
External + 24 V power supply *(1)* (not supplied)		24 V ⎓ (min. 19 V, max. 30 V) Power 30 W
Analog inputs	AI1-/AI1+	1 bipolar differential analog input ± 10 V ⎓ (maximum safe voltage 24 V) Max. sampling time: 2 ms ± 0.5 ms Resolution: 11 bits + 1 sign bit Accuracy: ± 0.6% for a temperature variation of 60°C Linearity: ± 0.15% of maximum value
	AI2	1 software-configurable voltage or current analog input: ■ Voltage analog input 0...10 V ⎓, impedance 30 kΩ (max. safe voltage 24 V) ■ Current analog input X-Y mA by programming X and Y from 0 to 20 mA, with impedance 242 Ω Max. sampling time: 2 ms ± 0.5 ms Resolution: 11 bits Accuracy: ± 0.6% for a temperature variation of 60°C Linearity: ± 0.15% of maximum value
	Other inputs	See option cards
Analog outputs	AO1	1 analog output software-configurable for voltage or current or as a logic output: ■ Voltage analog output 0...10 V ⎓, min. load impedance 470 Ω, ■ Current analog output X-Y mA by programming X and Y from 0 to 20 mA, max. load impedance 500 Ω Max. sampling time: 2 ms ± 0.5 ms Resolution: 10 bits Accuracy: ± 1% for a temperature variation of 60°C Linearity: ± 0.2% ■ Logic output: 10 V, 20 mA maximum
	Other outputs	See option cards
Configurable relay outputs	R1A, R1B, R1C	1 relay logic output, one "N/C" contact and one "N/O" contact with common point Minimum switching capacity: 3 mA for 24 V ⎓ Maximum switching capacity: ■ On resistive load (cos φ = 1): 5 A for 250 V ∿ or 30 V ⎓ ■ On inductive load (cos φ = 0.4 and L/R = 7 ms): 2 A for 250 V ∿ or 30 V ⎓ Max. response time: 7 ms ± 0.5 ms Electrical service life: 100,000 operations
	R2A, R2B	1 relay logic output, one "N/O" contact Minimum switching capacity: 3 mA for 24 V ⎓ Maximum switching capacity: ■ On resistive load (cos φ = 1): 5 A for 250 V ∿ or 30 V ⎓ ■ On inductive load (cos φ = 0.4 and L/R = 7 ms): 2 A for 250 V ∿ or 30 V ⎓ Max. response time: 7 ms ± 0.5 ms Electrical service life: 100,000 operations
	Other outputs	See option cards
Logic inputs LI	LI1...LI5	5 programmable logic inputs 24 V ⎓, compatible with level 1 PLC, IEC/EN 61131-2 standard Impedance: 3.5 kΩ Maximum voltage: 30 V Max. sampling time: 2 ms ± 0.5 ms Multiple assignment makes it possible to configure several functions on one input (example: LI1 assigned to forward and preset speed 2, LI3 assigned to reverse and preset speed 3)
	LI6	1 logic input, switch-configurable as a logic input or as an input for PTC probes Logic input, characteristics identical to inputs LI1...LI5 Input for a maximum of 6 PTC probes mounted in series: ■ Nominal value < 1.5 kΩ ■ Trip resistance 3 kΩ, reset value 1.8 kΩ ■ Short-circuit protection < 50 Ω This logic input must never be used to protect an ATEX motor in applications in explosive atmospheres *(2)*.
	Positive logic (Source)	State 0 if ⩽ 5 V or logic input not wired, state 1 if ⩾ 11 V
	Negative logic (Sink)	State 0 if ⩾ 16 V or logic input not wired, state 1 if ⩽ 10 V
	Other inputs	See option cards
Safety input	PWR	1 input for the Power Removal safety function and/or for thermal protection of the ATEX motor in applications in explosive atmospheres *(2)*: ■ Power supply: 24 V ⎓ (max. 30 V) ■ Impedance: 1.5 kΩ ■ State 0 if < 2 V, state 1 if > 17 V
Maximum wire size and tightening torque for inputs/outputs		2.5 mm² (AWG 14) 0.6 Nm

(1) Please consult our specialist catalogue "Phaseo power supplies and transformers"
(2) Please consult the ATEX guide, available on our website "www.telemecanique.com"

Electrical control characteristics (continued)

Acceleration and deceleration ramps			Ramp profiles: ■ Linear, can be adjusted separately from 0.01 to 9999 s ■ S, U or customized Automatic adaptation of deceleration ramp time if braking capacities exceeded, possible inhibition of this adaptation (use of braking resistor)
Braking to a standstill			By DC injection: ■ By a command on a programmable logic input ■ Automatically as soon as the estimated output frequency drops to < 0.1 Hz, period adjustable from 0 to 60 s or continuous, current adjustable from 0 to 1.2 In (in open-loop mode only).
Main drive protection and safety features			Thermal protection: ■ Against overheating ■ Of the power stage Protection against: ■ Short-circuits between motor phases ■ Input phase breaks ■ Overcurrents between output phases and earth ■ Overvoltages on the DC bus ■ A break on the control circuit ■ Exceeding the limit speed Safety function for: ■ Line supply overvoltage and undervoltage ■ Input phase loss, in three-phase
Motor protection (see page 296)			Thermal protection integrated in drive via continuous calculation of I^2t taking speed into account: ■ The motor thermal state is saved when the drive is powered down. ■ Function can be modified via operator dialogue terminals, depending on the type of motor (force-cooled or self-cooled). Protection against motor phase breaks Protection with PTC probes
Dielectric strength	ATV 71H●●●M3 ATV 71H●●●M3X		Between earth and power terminals: 2830 V ⎓ Between control and power terminals: 4230 V ⎓
	ATV 71●●●●N4 ATV 71P●●●N4Z		Between earth and power terminals: 3535 V ⎓ Between control and power terminals: 5092 V ⎓
	ATV 71H●●●Y		Between earth and power terminals: 3110 V ⎓ Between control and power terminals: 5345 V ⎓
Insulation resistance to earth			> 1 MΩ (electrical isolation) 500 V ⎓ for 1 minute
Frequency resolution	Display units	**Hz**	0.1
	Analog inputs	**Hz**	0.024/50 Hz (11 bits)

Operational safety characteristics and ATEX applications *(1)*

Protection	Of the machine		Power Removal (PWR) safety function which forces stopping and/or prevents the motor from restarting unintentionally, conforming to EN 954-1 category 3 and draft standard IEC/EN 61800-5-2.
	Of the system process		Power Removal (PWR) safety function which forces stopping and/or prevents the motor from restarting unintentionally, conforming to IEC/EN 61508 level SIL2 and draft standard IEC/EN 61800-5-2.
	Of the ATEX motor *(1)*		The PWR safety input of the Power Removal safety function is connected to the switching device integrated in the thermal sensor of the ATEX motor (or connected to the switching device of the control device when using PTC ATEX probes).
Response time		**ms**	⩽ 100 in STO (Safe Torque Off)

(1) Please consult the ATEX guide, available on our website "www.telemecanique.com"

Communication port characteristics

Modbus protocol

Type of connection		Modbus RJ45 connector port	Modbus RJ45 network port
Structure	Physical interface	2-wire RS 485	
	Transmission mode	RTU	
	Transmission speed	Configurable via the display terminal or the PowerSuite software workshop: 9600 bps or 19200 bps	Configurable via the display terminal or the PowerSuite software workshop: 4800 bps, 9600 bps, 19200 bps or 38.4 kbps
	Format	Fixed = 8 bits, even parity, 1 stop	Configurable via the display terminal or the PowerSuite software workshop: - 8 bits, odd parity, 1 stop - 8 bits, even parity, 1 stop - 8 bits, no parity, 1 stop - 8 bits, no parity, 2 stop
	Polarization	No polarization impedances These should be provided by the wiring system (for example, in the master)	
	Address	1 to 247, configurable via the terminal or the PowerSuite software workshop. 3 addresses can be configured in order to access the drive data, the “Controller Inside” programmable card and the communication card respectively. These 3 addresses are identical for the connector and network ports.	
Services	Device profiles	2 profiles: CiA 402 (“Device Profile Drives and Motion Control”) and I/O profile	
	Messaging	Read Holding Registers (03) 63 words maximum Write Single Register (06) Write Multiple Registers (16) 61 words maximum Read/Write Multiple Registers (23) 63/59 words maximum Read Device Identification (43) Diagnostics (08)	
	Communication monitoring	Can be inhibited. “Time out”, which can be set between 0.1 s and 30 s	
Diagnostics	With LEDs on ATV 71H●●●M3Z, ATV 71HD11M3XZ, HD15M3XZ, ATV 71H075N4Z…HD75N4Z ATV 71P●●●N4Z	One activity LED on integrated 7-segment display terminal. One LED for each port.	
	With graphic display terminal	One activity LED Command word received Reference received For each port: ■ Number of frames received ■ Number of incorrect frames	

CANopen protocol

Structure	Connector	9-way male SUB-D connector on CANopen adapter. This connects to the Modbus RJ45 Modbus network port.
	Network management	Slave
	Transmission speed	20 kbps, 50 kbps, 125 kbps, 250 kbps, 500 kbps or 1 Mbps
	Address (Node ID)	1 to 127, configurable via the terminal or the PowerSuite software workshop.
Services	Number of PDOs	3 receive and 3 transmit (PDO1, PDO2 and PDO3)
	PDO modes	Event-triggered, Time-triggered, Remotely-requested, Sync (cyclic), Sync (acyclic)
	PDO linking	Yes
	PDO mapping	Configurable (PDO1 and PDO2)
	Number of SDOs	1 server
	Emergency	Yes
	CANopen application layer	CiA DS 301, V 4.02
	Functional profiles	2 profiles: CiA 402 (“Device Profile Drives and Motion Control”) and I/O profile
	Communication monitoring	Node Guarding, Heartbeat
Diagnostics	With LEDs on ATV 71H●●●M3Z, ATV 71HD11M3XZ, HD15M3XZ, ATV 71H075N4Z…HD75N4Z ATV 71P●●●N4Z	2 LEDs: “RUN” and “ERROR” on integrated 7-segment display terminal
	With graphic display terminal and PowerSuite software workshop	2 LEDs: “RUN” and “ERROR” Command word received Reference received Display of received PDOs Display of transmitted PDOs State of NMT chart Received PDOs counter Transmitted PDOs counter Reception error counter Transmission error counter
Description file		A single eds file is supplied for the whole range on the CD-ROM containing the documentation or can be downloaded from the Internet at www.telemecanique.com. It contains the description of the drive parameters.

Torque characteristics (typical curves)

The curves opposite define the available continuous torque and transient overtorque for both force-cooled and self-cooled motors. The only difference is in the ability of the motor to provide a high continuous torque at less than half the nominal speed.

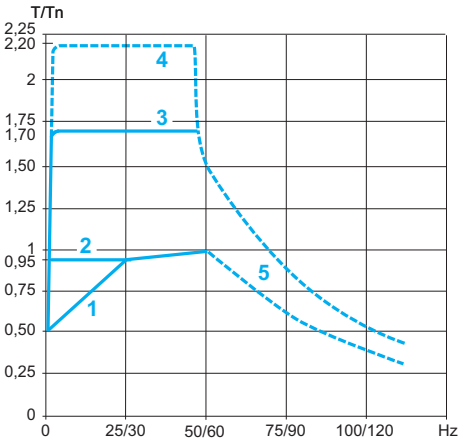

Open loop applications

Open loop applications

1 Self-cooled motor: continuous useful torque *(1)*
2 Force-cooled motor: continuous useful torque
3 Overtorque for 60 s maximum
4 Transient overtorque for 2 s maximum
5 Torque in overspeed at constant power *(2)*

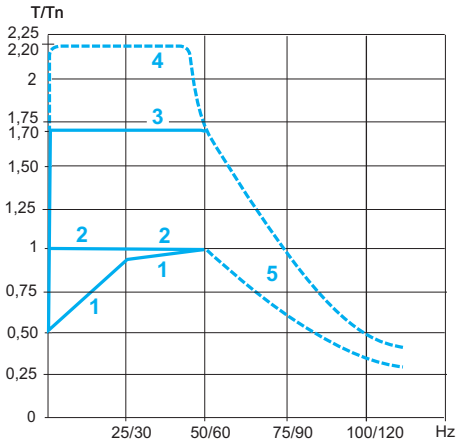

Closed loop applications

Closed loop applications

1 Self-cooled motor: continuous useful torque *(1)*
2 Force-cooled motor: continuous useful torque
3 Overtorque for 60 s maximum
4 Transient overtorque for 2 s maximum
5 Torque in overspeed at constant power *(2)*

Altivar 71 drives are capable of supplying nominal torque continuously at zero speed.

Motor thermal protection

Altivar 71 drives feature thermal protection designed specifically for self-cooled or force-cooled variable speed motors. The drive calculates the thermal state of the motor even when it is switched off.

This motor thermal protection is designed for a maximum ambient temperature of 40°C around the motor. If the temperature around the motor exceeds 40°C, thermal protection should be provided directly by thermistor probes (PTC) integrated in the motor. The probes are managed directly by the drive.

(1) For power ratings ⩽ 250 W, derating is 20% instead of 50% at very low frequencies.
(2) The motor nominal frequency and the maximum output frequency can be adjusted from 10 to 500 Hz or 1600 Hz depending on the supply voltage and the rating. The mechanical overspeed characteristics of the selected motor must be checked with the manufacturer.

Special uses

Using Altivar 71 drives with synchronous motors

Altivar 71 drives are also suitable for powering synchronous motors with sinusoidal electromotive force. This drive/motor combination makes it possible to obtain remarkable accuracy and maximum torque even at zero speed.
The design and construction of synchronous motors are such that they offer enhanced power density and high-speed performance in a compact unit.
Drive control for synchronous motors does not cause stalling.

Driving a synchronous motor with sinusoidal electromotive force without speed feedback.
The entire range of Altivar 71 variable speed drives can drive a synchronous motor with sinusoidal electromotive force without speed feedback. The performance level achieved is then comparable to that obtained with an asynchronous motor in sensorless flux vector control.

Driving a synchronous motor with sinusoidal electromotive force with or without speed feedback.
Using 200…240 V ∿ and 380…480 V ∿, a functional variant is available for Altivar 71 drives for driving a synchronous motor with sinusoidal electromotive force with or without speed feedback. The performance level achieved is then comparable to that obtained with an asynchronous motor in flux vector control with or without sensor.

Using special motors at high-speed

These motors are designed for constant torque applications with high frequency ranges. The Altivar 71 drive supports operating frequencies of up to 1600 Hz, depending on the supply voltage and the rating. Through their design, this type of motor is more sensitive to overvoltages than a standard motor.
Various solutions are available:
■ Overvoltage limitation function
■ Output filters
The drive's 5-point voltage/frequency control ratio is particularly well-suited as it avoids resonance.

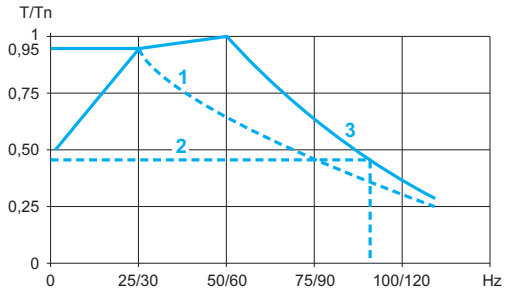

Using a motor at overspeed

Using a motor at overspeed

The maximum output frequency of the drive can be adjusted from:
■ 10 to 1600 Hz for drives rated less than or equal to 37 kW in 200… 240 V ∿ and 380…480 V ∿
■ 10 to 500 Hz for all other Altivar 71 drives whatever the type of power supply
When using a standardized asynchronous motor at overspeed, check the mechanical overspeed characteristics of the selected motor with the manufacturer.
Above its nominal speed corresponding to a frequency of 50/60 Hz, the motor operates with a decreasing flux, and its torque decreases significantly (see curve opposite). The application must be able to permit this type of low-torque, high-speed operation.

1 Machine torque (degressive torque)
2 Machine torque (low motor torque)
3 Continuous motor torque
Typical applications: wood-working machinery, broaching machines, high-speed hoisting, etc.

Special uses (continued)

Motor power less than drive power

The Altivar 71 can power any motor which has a rating lower than that for which the drive was designed. This motor/drive combination makes it suitable for applications requiring high, intermittent overtorque.
Typical applications: machines with very high starting torque, grinders, kneaders, etc.

Note: *In this case, it is advisable to over-rate the drive to the next standard power rating immediately above that of the motor.*

Example: Use an 11 kW motor with a 15 kW drive.

Power of self-cooled motor greater than the drive power

This motor-drive combination makes it possible to use a self-cooled motor for a greater speed range in continuous operation. The use of a motor with a higher power rating than that of the drive is only possible if the current drawn by this motor is less than or equal to the nominal drive current.

Note: *Limit the motor power to the standard rating immediately above that of the drive.*

Example: On a single machine, the use of a 2.2 kW drive combined with a 3 kW motor means that the machine can operate at its nominal power (2.2 kW) at low speed.
1 Motor power = drive power = 2.2 kW
2 2.2 kW drive combined with a 3 kW motor: greater speed range at 2.2 kW

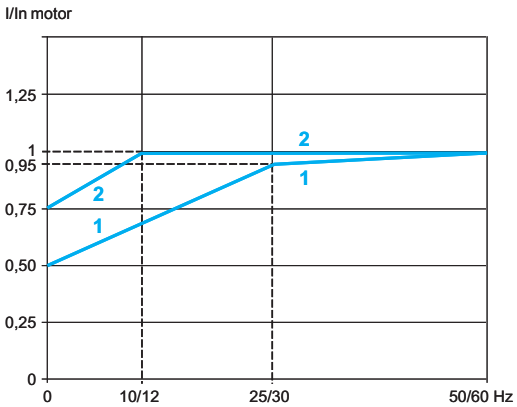

Power of a self-cooled motor greater than the drive power

Connecting motors in parallel

The nominal current of the drive must be greater than or equal to the sum of the currents of the motors to be controlled.
In this case, provide external thermal protection for each motor using probes or thermal overload relays. For cable runs over a certain length, taking account of all the tap links, it is advisable either to install an output filter between the drive and the motors or to use the overvoltage limitation function.

If several motors are used in parallel, there are two possible scenarios:
■ The motors have equal power ratings, in which case the torque characteristics will remain optimized after the drive has been configured
■ The motors have different power ratings, in which case the torque characteristics will not be optimized for all the motors

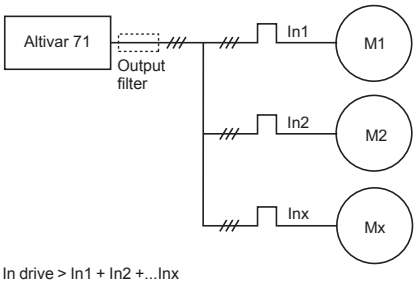

In drive > In1 + In2 +...Inx

Connecting motors in parallel

Using a motor at constant torque up to 87/104 Hz

A 400 V, 50 Hz motor in ⅄ connection can be used at constant torque up to 87 Hz if it is in Δ connection.
In this particular case, the initial motor power and the power of the first associated drive are multiplied by $\sqrt{3}$ (it is therefore important to select a drive with a suitable rating).
Example: A 2.2 kW 50 Hz motor in ⅄ connection supplies 3.8 kW at 87 Hz with a Δ connection.

Note: *Check the overspeed operating characteristics of the motor.*

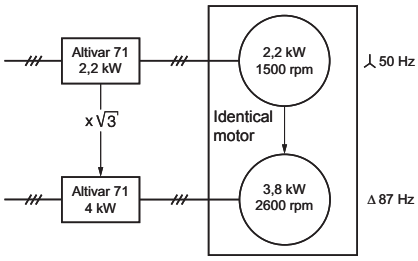

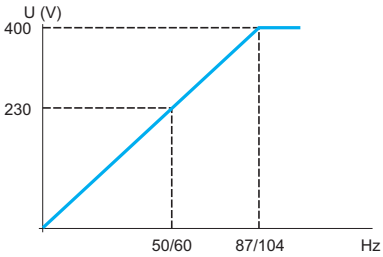

Using a motor at constant torque up to 87/104 Hz

Special uses (continued)

Using special motors

Special brake motors: tapered rotor or flux bypass

The magnetic field releases the brake. This type of operation with the Altivar 71 drive requires application of the voltage/frequency ratio.

Note: *The no-load current may be high, and operation at low speed can only be intermittent.*

ATEX motors in an explosive atmosphere explosive *(1)*

Use of the “Power Removal” safety function enables the variable speed drive to provide thermal protection in the event of excessive temperature rise of the ATEX motor, but it does not enable it to safely control and regulate the temperature of the ATEX motor.
All motor types ATEX certified for use in zones 1, 21, 2 or 22, which are equipped with ATEX thermal sensors, can be protected by the Altivar 71 variable speed drive.

Resistive rotor asynchronous motors

Different motor control ratios available on the Altivar 71 drive make it possible to apply specific settings when using high-slip motors.

Switching the motor at the drive output

The drive can be switched when locked or unlocked. If the drive is switched on-the-fly (drive unlocked), the motor is controlled and accelerates until it reaches the reference speed smoothly following the acceleration ramp. This use requires configuration of the automatic catching a spinning load ("catch on the fly") and the motor phase loss on output cut functions.

Typical applications: loss of safety circuit at drive output, bypass function, switching of motors connected in parallel.On new installations, it is recommended that the Power Removal safety function is used.

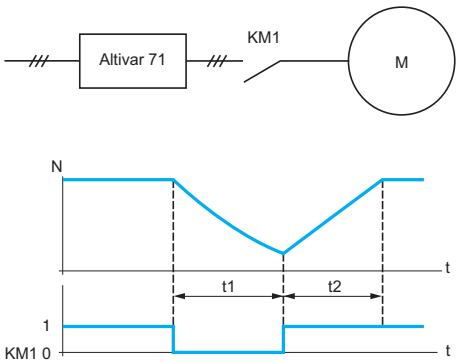

t1: deceleration without ramp (freewheel)
t2: acceleration with ramp
N: motor speed

Example of loss of output contactor

Test on a low power motor or without a motor

In a test or maintenance environment, the drive can be tested without having to use a motor with the same rating as the drive (particularly useful in the case of high power drives). This use requires deactivation of the output phase loss function.

(1) Please consult the ATEX guide, available on our website “www.telemecanique.com”

Variable speed drives

Altivar 71

Supply voltage 200...240 V 50/60 Hz

107478

ATV 71HU22M3Z

107474

ATV 71H037M3

107475

ATV 71HD37M3X

UL Type 1/IP20 drives

Motor		Line supply				Altivar 71				
Power indicated on plate *(1)*		Line current *(2)*		Apparent power	Maximum prospective line Isc	Maximum continuous current *(1)*	Max. transient current for		Reference *(3)*	Weight
		200 V	240 V	240 V		230 V	60 s	2 s		
kW	HP	A	A	kVA	kA	A	A	A		kg
Single phase supply voltage: 200…240 V 50/60 Hz										
0.37	0.5	6.9	5.8	1.4	5	3	4.5	4.9	**ATV 71H075M3** *(4) (5)*	3.000
0.75	1	12	9.9	2.4	5	4.8	7.2	7.9	**ATV 71HU15M3** *(4) (5)*	3.000
1.5	2	18.2	15.7	3.7	5	8	12	13.2	**ATV 71HU22M3** *(4) (5)*	4.000
2.2	3	25.9	22.1	5.3	5	11	16.5	18.1	**ATV 71HU30M3** *(4) (5)*	4.000
3	–	25.9	22	5.3	5	13.7	20.6	22.6	**ATV 71HU40M3** *(4) (5) (6)*	4.000
4	5	34.9	29.9	7	5	17.5	26.3	28.8	**ATV 71HU55M3** *(4) (5) (6)*	5.500
5.5	7.5	47.3	40.1	9.5	22	27.5	41.3	45.3	**ATV 71HU75M3** *(4) (5) (6)*	7.000
Three-phase supply voltage: 200…240 V 50/60 Hz										
0.37	0.5	3.5	3.1	1.3	5	3	4.5	4.9	**ATV 71H037M3** *(4) (5)*	3.000
0.75	1	6.1	5.3	2.2	5	4.8	7.2	7.9	**ATV 71H075M3** *(4) (5)*	3.000
1.5	2	11.3	9.6	4	5	8	12	13.2	**ATV 71HU15M3** *(4) (5)*	3.000
2.2	3	15	12.8	5.3	5	11	16.5	18.1	**ATV 71HU22M3** *(4) (5)*	4.000
3	–	19.3	16.4	6.8	5	13.7	20.6	22.6	**ATV 71HU30M3** *(4) (5)*	4.000
4	5	25.8	22.9	9.5	5	17.5	26.3	28.8	**ATV 71HU40M3** *(4) (5)*	4.000
5.5	7.5	35	30.8	12.8	22	27.5	41.3	45.3	**ATV 71HU55M3** *(4) (5)*	5.500
7.5	10	45	39.4	16.4	22	33	49.5	54.5	**ATV 71HU75M3** *(4) (5)*	7.000
11	15	53.3	45.8	19	22	54	81	89.1	**ATV 71HD11M3X** *(4) (5) (7)*	22.000
15	20	71.7	61.6	25.6	22	66	99	109	**ATV 71HD15M3X** *(4) (5) (7)*	22.000
18.5	25	77	69	28.7	22	75	112	124	**ATV 71HD18M3X** *(4) (7)*	30.000
22	30	88	80	33.3	22	88	132	145	**ATV 71HD22M3X** *(4) (7)*	30.000
30	40	124	110	45.7	22	120	180	198	**ATV 71HD30M3X** *(4) (7)*	37.000
37	50	141	127	52.8	22	144	216	238	**ATV 71HD37M3X** *(4) (7)*	37.000
45	60	167	147	61.1	22	176	264	290	**ATV 71HD45M3X** *(4) (7)*	37.000
55	75	200	173	71.9	35	221	332	365	**ATV 71HD55M3X** *(7) (8) (9)*	84.000
75	100	271	232	96.4	35	285	428	470	**ATV 71HD75M3X** *(7) (8) (9)*	106.000

(1) These values are given for a nominal switching frequency of 4 kHz up to ATV 71HD15M3X or 2.5 kHz for ATV 71HD18M3X…HD75M3X drives for use in continuous operation.
The switching frequency is adjustable from 1…16 kHz up to ATV 71HD45M3X and from 1…8 kHz for ATV 71HD55M3X and ATV 71HD75M3X drives. Above 2.5 or 4 kHz, depending on the rating, the drive will reduce the switching frequency automatically in the event of an excessive temperature rise. For continuous operation above the nominal switching frequency, derate the nominal drive current (see derating curves on pages 251 and 254).

(2) Typical value for the indicated motor power and for the maximum prospective line Isc.

*(3) Drives supplied as standard with or without sensor feedback for asynchronous motors, and without speed feedback for synchronous motors with sinusoidal electromotive force. It is possible to order a drive that can control not only those motors included in the standard offer, but also synchronous motors with sinusoidal electromotive force with speed feedback, by adding 383 at the end of the reference. For example: ATV 71H037M3 becomes **ATV 71H037M3383**.*
See pages 110 to 113 for the available encoder interface cards. This offer is not available for ATV 71H●●●M3S337, ATV 71HD11M3X337...HD45M3X337 (4) and ATV 71HD55M3XD, HD75M3XD drives (8).

(4) ATV 71HD55M3X, HD75M3X drives are supplied as standard in a reinforced version for operation in specific environmental conditions (see the environmental conditions on page 11).
To order ATV 71H●●●M3 and ATV 71HD11M3X…HD45M3X drives in a reinforced version for specific environmental conditions, add the following at the end of the reference:
*- S337 for ATV 71H●●●M3. For example: ATV 71H037M3 becomes **ATV 71H037M3S337***
*- 337 for ATV 71H●●●M3X. For example: ATV 71HD11M3X becomes **ATV 71HD11M3X337***
In the reinforced version, the drive is supplied with a remote graphic display terminal.

(5) All the drives are supplied with a remote graphic display terminal.
*To order an ATV 71H●●●M3, ATV 71HD11M3X, HD15M3X drive without a graphic display terminal, add a Z at the end of the reference. The drive will then come equipped with an integrated 7-segment display terminal. For example: ATV 71H037M3 becomes **ATV 71H037M3Z**. To order ATV 71H●●●M3383 and ATV 71HD11M3X383, HD15M3X383 drives without a graphic display terminal, please contact your Regional Sales Office.*

(6) A line choke must be used, see page 160.

(7) Drive supplied without EMC filter. EMC filters are available as an option, see page 168.

*(8) Drive supplied as standard with a DC choke, which must be used when connecting the drive to the three-phase supply. For connections to the DC bus, the drive can be ordered without a DC choke by adding a **D** at the end of the reference. For example: ATV 71HD55M3X becomes **ATV 71HD55M3XD.***

(9) Drive supplied without plate for EMC mounting. It is included in the kit for UL Type 1 or IP 31 conformity, which must be ordered separately, see pages 32 and 33.

***Note:** Consult the summary tables of possible drive, option and accessory combinations, see pages 176 and 177.*

Variable speed drives

Altivar 71

Supply voltage 380...480 V 50/60 Hz

107464

ATV 71HU22N4

107472

ATV 71HU40N4Z

107461

ATV 71HC28N4

UL Type 1/IP20 drives

Motor		Line supply				Altivar 71					
Power indicated on plate (1)		Line current (2)		Apparent power	Maximum prospective line Isc	Maximum continuous current (1)		Max. transient current for		Reference (3)	Weight
		380 V	480 V	380 V		380 V	460 V	60 s	2 s		
kW	HP	A	A	kVA	kA	A	A	A	A		kg
Three-phase supply voltage: 380…480 V 50/60 Hz											
0.75	1	3.7	3	2.4	5	2.3	2.1	3.5	3.8	**ATV 71H075N4** (4) (5)	3.000
1.5	2	5.8	5.3	3.8	5	4.1	3.4	6.2	6.8	**ATV 71HU15N4** (4) (5)	3.000
2.2	3	8.2	7.1	5.4	5	5.8	4.8	8.7	9.6	**ATV 71HU22N4** (4) (5)	3.000
3	–	10.7	9	7	5	7.8	6.2	11.7	12.9	**ATV 71HU30N4** (4) (5)	4.000
4	5	14.1	11.5	9.3	5	10.5	7.6	15.8	17.3	**ATV 71HU40N4** (4) (5)	4.000
5.5	7.5	20.3	17	13.4	22	14.3	11	21.5	23.6	**ATV 71HU55N4** (4) (5)	5.500
7.5	10	27	22.2	17.8	22	17.6	14	26.4	29	**ATV 71HU75N4** (4) (5)	5.500
11	15	36.6	30	24.1	22	27.7	21	41.6	45.7	**ATV 71HD11N4** (4) (5)	7.000
15	20	48	39	31.6	22	33	27	49.5	54.5	**ATV 71HD15N4** (4) (5)	22.000
18.5	25	45.5	37.5	29.9	22	41	34	61.5	67.7	**ATV 71HD18N4** (4) (5)	22.000
22	30	50	42	32.9	22	48	40	72	79.2	**ATV 71HD22N4** (4) (5)	30.000
30	40	66	56	43.4	22	66	52	99	109	**ATV 71HD30N4** (4) (5)	37.000
37	50	84	69	55.3	22	79	65	118.5	130	**ATV 71HD37N4** (4) (5)	37.000
45	60	104	85	68.5	22	94	77	141	155	**ATV 71HD45N4** (4) (5)	44.000
55	75	120	101	79	22	116	96	174	191	**ATV 71HD55N4** (4) (5)	44.000
75	100	167	137	109.9	22	160	124	240	264	**ATV 71HD75N4** (4) (5)	44.000
90	125	166	134	109.3	35	179	179	269	295	**ATV 71HD90N4** (6) (7)	60.000
110	150	202	163	133	35	215	215	323	355	**ATV 71HC11N4** (6) (7)	74.000
132	200	239	192	157.3	35	259	259	388	427	**ATV 71HC13N4** (6) (7)	80.000
160	250	289	233	190.2	50	314	314	471	518	**ATV 71HC16N4** (6) (7)	110.000
200	300	357	286	235	50	387	387	580	638	**ATV 71HC20N4** (6) (7)	140.000
220	350	396	320	260.6	50	427	427	640	704	**ATV 71HC25N4** (6) (7)	140.000
250	400	444	357	292.2	50	481	481	721	793		
280	450	494	396	325.1	50	550	550	825	907	**ATV 71HC28N4** (6) (7)	140.000
315	500	555	444	365.3	50	616	616	924	1016	**ATV 71HC31N4** (6) (7)	215.000
355	–	637	512	419.3	50	671	671	1006	1107	**ATV 71HC40N4** (6) (7)	225.000
400	600	709	568	466.6	50	759	759	1138	1252		
500	700	876	699	576.6	50	941	941	1411	1552	**ATV 71HC50N4** (6) (7)	300.000

(1) These values are given for a nominal switching frequency of 4 kHz up to ATV 71HD30N4 or 2.5 kHz for ATV 71HD37N4…HC50N4 drives for use in continuous operation.
The switching frequency is adjustable from 1…16 kHz up to ATV 71HD75N4 and from 2.5…8 kHz for ATV 71HD90N4…ATV 71HC50N4 drives.
Above 2.5 or 4 kHz, depending on the rating, the drive will reduce the switching frequency automatically in the event of an excessive temperature rise. For continuous operation above the nominal switching frequency, derate the nominal drive current (see derating curves on pages 251 and 254 to 256).

(2) Typical value for the indicated motor power and for the maximum prospective line Isc.

*(3) Drives supplied as standard with or without sensor feedback for asynchronous motors, and without speed feedback for synchronous motors with sinusoidal electromotive force. It is possible to order a drive that can control not only those motors included in the standard offer, but also synchronous motors with sinusoidal electromotive force with speed feedback, by adding 383 at the end of the reference. For example: ATV 71H075N4 becomes **ATV 71H075N4383.***
See pages 110 to 113 for the available encoder interface cards.
This offer is not available for ATV 71H075N4S337...HD75N4S337 (4) and ATV 71HD90N4D...HC50N4D (6) drives.

(4) ATV 71HD90N4…HC50N4 drives are supplied as standard in a reinforced version for operation in specific environmental conditions (see the environmental conditions on page 11).
*To order ATV 71H075N4...HD75N4 drives in a reinforced version, add **S337** at the end of the reference. For example: ATV 71H075N4 becomes **ATV 71H075N4S337.***
In the reinforced version, the drive is supplied with a remote graphic display terminal.

*(5) All the drives are supplied with a remote graphic display terminal. To order an ATV 71H075N4...ATV 71HD75N4 drive without a graphic display terminal, add a **Z** at the end of the reference. The drive will then come equipped with an integrated 7-segment display terminal.*
*For example: ATV 71H075N4 without a graphic display terminal becomes **ATV 71H075N4Z.***
To order ATV 71H075N4383...HD75N4383 drives without a graphic display terminal, please contact your Regional Sales Office.

(6) Drive supplied as standard with a DC choke, which must be used when connecting the drive to the three-phase supply.
*For connections to the DC bus, the drive can be ordered without a DC choke by adding a **D** at the end of the reference.*
*For example: ATV 71HD90N4 becomes **ATV 71HD90N4D.***

(7) Drive supplied without plate for EMC mounting. It is included in the UL Type 1 or IP 31 kit, which must be ordered separately, see pages 32 and 33.

***Note:** Consult the summary tables of possible drive, option and accessory combinations, see pages 178 and 179.*

Variable speed drives

Altivar 71

Supply voltage 380...480 V 50/60 Hz

107473

ATV 71W075N4

UL Type 12/IP54 drives with an integrated class A EMC filter

Motor		Line supply				Altivar 71					
Power indicated on plate (1)		Line current (2)		Apparent power	Maximum prospective line Isc	Maximum continuous current (1)		Max. transient current for		Reference (3) (4)	Weight
		380 V	480 V	380 V		380 V	460 V	60 s	2 s		
kW	HP	A	A	kVA	kA	A		A			kg
Three-phase supply voltage: 380…480 V 50/60 Hz											
0.75	1	3.7	3	2.4	5	2.3	2.1	3.5	3.8	**ATV 71W075N4**	12.000
1.5	2	5.8	5.3	3.8	5	4.1	3.4	6.2	6.8	**ATV 71WU15N4**	12.000
2.2	3	8.2	7.1	5.4	5	5.8	4.8	8.7	9.6	**ATV 71WU22N4**	12.000
3	–	10.7	9	7	5	7.8	6.2	11.7	12.9	**ATV 71WU30N4**	13.000
4	5	14.1	11.5	9.3	5	10.5	7.6	15.8	17.3	**ATV 71WU40N4**	13.000
5.5	7.5	20.3	17	13.4	22	14.3	11	21.5	23.6	**ATV 71WU55N4**	16.000
7.5	10	27	22.2	17.8	22	17.6	14	26.4	29	**ATV 71WU75N4**	16.000
11	15	36.6	30	24.1	22	27.7	21	41.6	45.7	**ATV 71WD11N4**	21.000
15	20	48	39	31.6	22	33	27	49.5	54.5	**ATV 71WD15N4**	31.000
18.5	25	45.5	37.5	29.9	22	41	34	61.5	67.7	**ATV 71WD18N4**	31.000
22	30	50	42	32.9	22	48	40	72	79.2	**ATV 71WD22N4**	30.500
30	40	66	56	43.4	22	66	52	99	109	**ATV 71WD30N4**	38.500
37	50	84	69	55.3	22	79	65	118.5	130	**ATV 71WD37N4**	38.500
45	60	104	85	68.5	22	94	77	141	155	**ATV 71WD45N4**	61.500
55	75	120	101	79	22	116	96	174	191	**ATV 71WD55N4**	61.500
75	100	167	137	109.9	22	160	124	240	264	**ATV 71WD75N4**	61.500

107481

ATV 71PU40N4Z

UL Type 1/IP20 drives on base plate with an integrated class A EMC filter

Motor		Line supply				Altivar 71					
Power indicated on plate (1)		Line current (2)		Apparent power	Maximum prospective line Isc	Maximum continuous current (1)		Max. transient current for		Reference (5) (6) (7)	Weight
		380 V	480 V	380 V		380 V	460 V	60 s	2 s		
kW	HP	A	A	kVA	kA	A	A	A	A		kg
Three-phase supply voltage: 380…480 V 50/60 Hz											
0.75	1	3.7	3	2.4	5	2.3	2.1	3.5	3.8	**ATV 71P075N4Z**	2.700
1.5	2	5.8	5.3	3.8	5	4.1	3.4	6.2	6.8	**ATV 71PU15N4Z**	2.700
2.2	3	8.2	7.1	5.4	5	5.8	4.8	8.7	9.6	**ATV 71PU22N4Z**	2.700
3	–	10.7	9	7	5	7.8	6.2	11.7	12.9	**ATV 71PU30N4Z**	3.600
4	5	14.1	11.5	9.3	5	10.5	7.6	15.8	17.3	**ATV 71PU40N4Z**	3.600
5.5	7.5	20.3	17	13.4	22	14.3	11	21.5	23.6	**ATV 71PU55N4Z**	5.000
7.5	10	27	22.2	17.8	22	17.6	14	26.4	29	**ATV 71PU75N4Z**	5.000
11	15	36.6	30	24.1	22	27.7	21	41.6	45.7	**ATV 71PD11N4Z**	7.000

(1) These values are given for a nominal switching frequency in continuous operation of:
- 4 kHz for ATV 71W075N4...WD30N4 and ATV 71P●●●N4Z drives
- 2.5 kHz for ATV 71WD37N4…WD75N4 drives.
The switching frequency is adjustable from 1 to 16 kHz for all ratings.
Above 2.5 (ATV 71WD37N4…WD75N4) or 4 kHz (ATV 71W075N4...WD30N4 and ATV 71P●●●N4Z), the drive will reduce the switching frequency automatically in the event of an excessive temperature rise. For continuous operation above the nominal switching frequency, derate the nominal drive current, see derating curves on pages 265 (ATV 71W●●●N4) and 251 (ATV 71P●●●N4Z).

(2) Typical value for the indicated motor power and for the maximum prospective line Isc.

*(3) ATV 71W●●●N4 drives can be ordered with a 24 V ⎓ power supply, thus allowing an additional consumption of 250 mA. In this case, add **A24** at the end of the reference.*
*For example: ATV 71W075N4 becomes **ATV 71W075N4A24**.*
These ATV 71W●●●N4A24 drives:
- Also have the reinforced version treatment for operation in specific environmental conditions (see the environmental conditions on page 11).
- Incorporate a DC choke to reduce the current harmonics.

(4) All ATV 71W●●●N4 drives are supplied with a plate for EMC mounting.

(5) All ATV 71P●●●N4Z drives are equipped with an integrated 7-segment display terminal.

(6) A DC choke must be used, see page 155.

(7) All ATV 71P●●●N4Z drives are supplied with a plate for EMC mounting and a thermal liner for mounting on the machine frame, see page 31.

Note:
- Consult the summary tables of possible combinations of ATV 71W●●●N4 drives, options and accessories, pages 180 and 181
- Consult the summary tables of possible combinations of ATV 71P●●●N4Z drives, options and accessories, pages 182 and 183.

Variable speed drives

Altivar 71

Supply voltage 500...690 V 50/60 Hz

107536

ATV 71HU22Y

107538

ATV 71HD37Y

107540

107532

ATV 71HC25Y
+
VW3 A4 572 (Line choke compulsory) (5)

UL Type 1/IP20 drives

Motor			Line supply				Altivar 71				
Power indicated on plate (1)			Line current (2)			Maximum prospective line Isc	Maximum continuous current (1) (3)			Reference (4)	Weight
500 V	575 V	690 V	500 V	600 V	690 V		500 V	575 V	690 V		
kW	HP	kW	A	A	A	kA	A	A	A		kg
Three-phase supply voltage: 500…690 V 50/60 Hz											
1.5	2	2.2	3.8	3.2	4	22	3.2	2.7	4	**ATV 71HU22Y**	30.000
2.2	3	3	5.2	4.4	5.2	22	4.5	3.9	4.5	**ATV 71HU30Y**	30.000
3	–	4	6.8	–	6.6	22	5.8	–	5.5	**ATV 71HU40Y**	30.000
4	5	5.5	8.6	7.2	8.6	22	7.5	6.1	7.5	**ATV 71HU55Y**	30.000
5.5	7.5	7.5	11.2	9.5	11.2	22	10	9	10	**ATV 71HU75Y**	30.000
7.5	10	11	14.6	12.3	15.5	22	13.5	11	13.5	**ATV 71HD11Y**	30.000
11	15	15	19.8	16.7	20.2	22	18.5	17	18.5	**ATV 71HD15Y**	30.000
15	20	18.5	24	21	24	22	24	22	24	**ATV 71HD18Y**	30.000
18.5	25	22	29	24	27	22	29	27	27	**ATV 71HD22Y**	30.000
22	30	30	33	28	34	22	35	32	35	**ATV 71HD30Y**	30.000
30	40	37	48	41	47	22	47	41	43	**ATV 71HD37Y**	68.000
37	50	45	62	51	55	22	59	52	54	**ATV 71HD45Y**	68.000
45	60	55	68	57	63	22	68	62	62	**ATV 71HD55Y**	68.000
55	75	75	84	70.5	88	22	85	77	84	**ATV 71HD75Y**	68.000
75	100	90	109	92	101	22	110	99	104	**ATV 71HD90Y**	68.000
90	125	110	128	113	117	28	136	125	125	**ATV 71HC11Y** (5) (6)	116.000
110	150	132	153	133	137	28	165	144	150	**ATV 71HC13Y** (5) (6)	116.000
132	–	160	182	–	163	35	200	–	180	**ATV 71HC16Y** (5) (6)	116.000
160	200	200	227	204	212	35	240	192	220	**ATV 71HC20Y** (5) (6)	207.000
200	250	250	277	249	256	35	312	242	290	**ATV 71HC25Y** (5) (6)	207.000
250	350	315	342	311	317	35	390	336	355	**ATV 71HC31Y** (5) (6)	207.000
315	450	400	439	401	409	35	462	412	420	**ATV 71HC40Y** (5) (6)	435.000
400	550	500	544	491	498	35	590	528	543	**ATV 71HC50Y** (5) (6)	435.000
500	700	630	673	613	616	42	740	672	675	**ATV 71HC63Y** (5) (6)	435.000

(1) These values are given for a nominal switching frequency of 4 kHz up to ATV 71HD30Y or 2.5 kHz for ATV 71HD37Y…HC63Y drives for use in continuous operation.
The switching frequency is adjustable from 2.5…6 kHz up to ATV 71HD30Y and from 2.5…4.9 kHz for ATV 71HD37Y… ATV 71HC63Y drives.
Above 2.5 kHz or 4 kHz, depending on the rating, the drive will reduce the switching frequency automatically in the event of an excessive temperature rise. For continuous operation above the nominal switching frequency, derate the nominal drive current (see derating curves on pages 252, 257 and 258).
(2) Typical value for the indicated motor power and for the maximum prospective line Isc.
(3) The maximum transient current for:
- 60 seconds is equal to 150% of the maximum continuous current
- 2 seconds is equal to 165% of the maximum continuous current
(4) Drives supplied as standard:
- With or without sensor feedback for asynchronous motors, and without speed feedback for synchronous motors with sinusoidal electromotive force.
- In a reinforced version for operation in specific environmental conditions (see the environmental conditions on page 11).
- With a remote graphic display terminal and an integrated 7-segment display terminal
(5) Line choke mandatory for ATV 71HC11Y…HC63Y drives, unless a special transformer is used (12-pulse). The line choke must be ordered separately, see page 160.
(6) Drive supplied without plate for EMC mounting. It is included in the UL Type 1 or IP 31 kit, which must be ordered separately, see pages 32 and 33.

Note: *Consult the summary tables of possible drive, option and accessory combinations, see pages 184 and 185.*

Adapter for 115 V ∿ logic inputs

This adapter is used to connect 115 V ∿ logic signals to the logic inputs on the drive or an I/O extension card.

7 logic inputs with capacitive impedance at 60 Hz of 0.22 µF are available for connecting the logic signals:
- Maximum current: 200 mA
- Response time: 5 ms to change from state 0 to state 1, 20 ms to change from state 1 to state 0
- Logic state 0 for a voltage below 20 V, logic state 1 for a voltage between 70 V and 132 V.

The power supply must be provided by a 115 V a external power supply (min. 70 V, max. 132 V).

Reference

Description	Reference	Weight kg
Adapter for 115 V ∿ logic inputs	**VW3 A3 101**	–

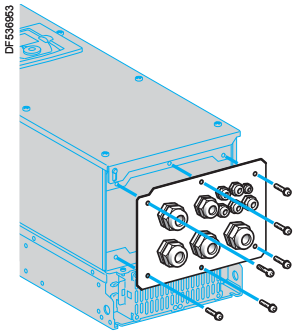

Ready-assembled IP 54 base plate

Ready-assembled IP 54 base plate (for ATV 71W●●●N4 drives)

This plate can be used to increase the number of cable connections supported by the drive as standard from 3 to 11.

It is supplied with:
- A metal cable gland for the motor cable
- A special plastic cable gland for the network cable
- Plastic cable glands for the connection of the control cable or options such as communication cards, etc.

References

For drive	Type of cable gland			Reference	Weight kg
	Metal	Plastic	Plastic for network cable		
ATV 71W075N4 …WU40N4	1 (ISO 25)	1 (ISO 12), 4 (ISO 16), 3 (ISO 20), 1 (ISO 25)	1 (ISO 32)	**VW3 A9 901**	–
ATV 71WU55N4, WU75N4	1 (ISO 25)	1 (ISO 12), 4 (ISO 16), 3 (ISO 20), 1 (ISO 25)	1 (ISO 32)	**VW3 A9 902**	–
ATV 71WD11N4	1 (ISO 32)	1 (ISO 12), 4 (ISO 16), 1 (ISO 20), 3 (ISO 32)	1 (ISO 32)	**VW3 A9 903**	–
ATV 71WD15N4, WD18N4	1 (ISO 32)	1 (ISO 12), 4 (ISO 16), 1 (ISO 20), 3 (ISO 32)	1 (ISO 32)	**VW3 A9 904**	–
ATV 71WD22N4	1 (ISO 40)	1 (ISO 12), 4 (ISO 16), 1 (ISO 20), 3 (ISO 40)	1 (ISO 32)	**VW3 A9 905**	–
ATV 71WD30N4, WD37N4	1 (ISO 40)	1 (ISO 12), 4 (ISO 16), 1 (ISO 20), 3 (ISO 50)	1 (ISO 32)	**VW3 A9 906**	–
ATV 71WD45N4 …WD75N4	1 (ISO 50)	1 (ISO 12), 4 (ISO 16), 1 (ISO 20), 1 (ISO 50), 1 (ISO 63)	1 (ISO 32)	**VW3 A9 907**	–

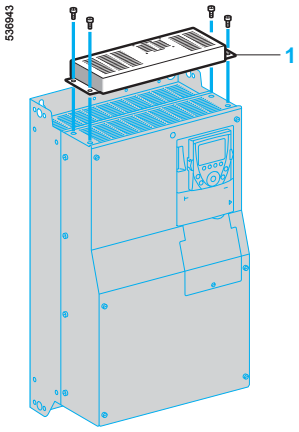

Control card fan kit

Control card fan kit
(for ATV 71H●●●●● drives on heatsink)

This kit is required for ATV 71HD18M3X…HD45M3X, ATV 71HD22N4…HD75N4 and ATV 71HU22Y…HD90Y drives in order that they can operate at ambient temperatures between 50°C and 60°C, for example if they are mounted in an IP54 enclosure. The circulation of the air around the electronic cards prevents the formation of hot spots.

Check the derating to be applied to the drive nominal current (see the derating curves on pages 251 and 252).

The kit **1** is mounted on the upper part of the drive. It is powered by the drive.
It consists of:
- A fan subassembly
- Fixing accessories
- A manual

References

For drives	Reference	Weight kg
ATV 71HD18M3X, HD22M3X ATV 71HD22N4 ATV 71HU22Y…HD30Y	**VW3 A9 404**	–
ATV 71HD30N4, HD37N4	**VW3 A9 405**	–
ATV 71HD30M3X…HD45M3X	**VW3 A9 406**	–
ATV 71HD45N4…HD75N4 ATV 71HD37Y…HD90Y	**VW3 A9 407**	–

Dimensions:
page 197

Variable speed drives
Altivar 71
Options: accessories

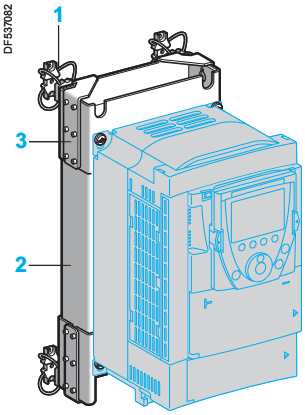

ATV 71HD11M3X drive mounted on kit DNV VW3 A9 625

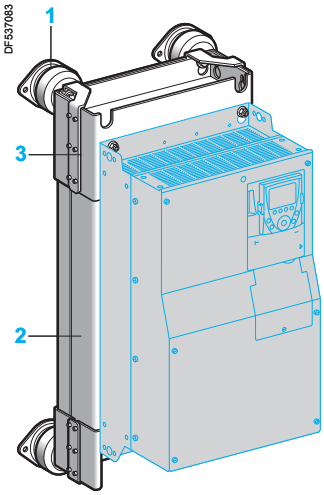

ATV 71HD45N4 drive mounted on kit DNV VW3 A9 628

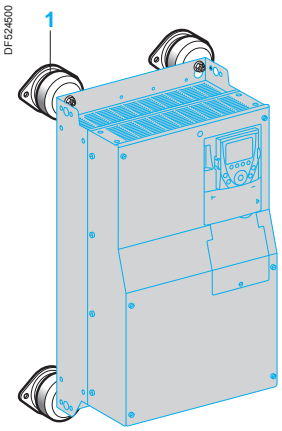

ATV 71H●●●Y drive mounted on kit DNV VW3 A9 64●

DNV kit

This kit enables Altivar 71 variable speed drives to satisfy the requirements of the DNV certification body.

For the following variable speed drives:
- ATV 71H●●●M3
- ATV 71HD11M3X…HD45M3X
- ATV 71H075N4…HD75N4.

The kit consists of:
- Shock-absorbing mounts 1
- An additional EMC input filter 2
- EMC filter supports 3
- Fixing accessories.

It is mounted on the back of the variable speed drive on the additional EMC filter supplied with the DNV kit as standard.

References

For drives	Reference	Weight kg
ATV 71H037M3…HU15M3 ATV 71H075N4…HU22N4	**VW3 A9 621**	5.400
ATV 71HU22M3…HU40M3 ATV 71HU30N4, HU40N4	**VW3 A9 622**	7.400
ATV 71HU55M3 ATV 71HU55N4, HU75N4	**VW3 A9 623**	9.800
ATV 71HU75M3 ATV 71HD11N4	**VW3 A9 624**	11.200
ATV 71HD11M3X, HD15M3X ATV 71HD15N4, HD18N4	**VW3 A9 625**	16.500
ATV 71HD18M3X, HD22M3X ATV 71HD22N4	**VW3 A9 626**	20.000
ATV 71HD30N4, HD37N4	**VW3 A9 627**	22.500
ATV 71HD30M3X…HD45M3X ATV 71HD45N4…HD75N4	**VW3 A9 628**	53.500

For ATV 71HU22Y…HD30Y variable speed drives, the kit consists of:
- Shock-absorbing mounts 1
- An EMC input filter
- Fixing accessories.

The shock-absorbing mounts are mounted on the back of the variable speed drive. The EMC filter is positioned beside the unit.

Reference

For drives	Reference	Weight kg
ATV 71HU22Y…HD30Y	**VW3 A9 642**	7.500

For ATV 71HD37Y…HD90Y variable speed drives, the kit consists of:
- Shock-absorbing mounts 1
- An EMC input filter
- A line choke
- Fixing accessories.

The shock-absorbing mounts are mounted on the back of the variable speed drive. The EMC filter is positioned beside the unit. The line choke must be installed upstream of the drive.

Reference

For drives	Reference	Weight kg
ATV 71HD37Y…HD90Y	**VW3 A9 643**	32.000

Dimensions
page 194

Variable speed drives
Altivar 71
Options: accessories

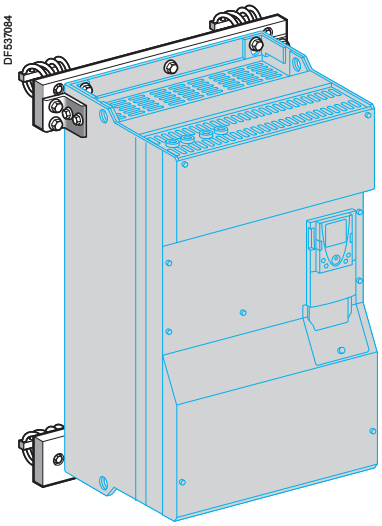

ATV 71HC11N4D drive mounted on kit DNV VW3 A9 631

DNV kit (continued)

For the following variable speed drives:
- ATV 71HD55M3XD, HD75M3XD
- ATV 71HD90N4D…HC50N4D
- ATV 71HC11Y…HC63Y

The kit consists of:
- Shock-absorbing mounts 1
- The mechanical fittings (profiles and brackets) required for fixing 2
- Fixing accessories.

It is mounted on the back of the variable speed drive using the mechanical fittings.

References

For drives	Line choke (1)	EMC filter (2)	Reference	Weight kg
ATV 71HD55M3XD	VW3 A4 562	VW3 A4 410	**VW3 A9 629**	–
ATV 71HD90N4D	VW3 A4 559	VW3 A4 410	**VW3 A9 629**	–
ATV 71HD75M3XD	VW3 A4 563	VW3 A4 410	**VW3 A9 631**	–
ATV 71HC11N4D	VW3 A4 559	VW3 A4 410	**VW3 A9 631**	–
ATV 71HC13N4D	VW3 A4 560	VW3 A4 410	**VW3 A9 633**	–
ATV 71HC16N4D	VW3 A4 561	VW3 A4 411	**VW3 A9 635**	–
ATV 71HC20N4D	VW3 A4 569	VW3 A4 411	**VW3 A9 637**	–
ATV 71HC25N4D, HC28N4D	VW3 A4 564	VW3 A4 411	**VW3 A9 638**	–
ATV 71HC31N4D	VW3 A4 565	VW3 A4 412	**VW3 A9 639**	–
ATV 71HC40N4D	2 x VW3 A4 569	2 x VW3 A4 411	**VW3 A9 640**	–
ATV 71HC50N4D	2 x VW3 A4 564	2 x VW3 A4 411	**VW3 A9 641**	–
ATV 71HC11Y *(3)*	VW3 A4 570	VW3 A4 414	**VW3 A9 644**	–
ATV 71HC13Y, HC16Y *(3)*	VW3 A4 571	VW3 A4 414	**VW3 A9 645**	–
ATV 71HC20Y *(3)*	VW3 A4 560	VW3 A4 415	**VW3 A9 646**	–
ATV 71HC25Y, HC31Y *(3)*	VW3 A4 572	VW3 A4 415	**VW3 A9 647**	–
ATV 71HC40Y *(3)*	2 x VW3 A4 568	2 x VW3 A4 415	**VW3 A9 648**	–
ATV 71HC50Y, HC63Y *(3)*	2 x VW3 A4 572	2 x VW3 A4 415	**VW3 A9 649**	–

(1) A line choke must be used. It must be ordered separately (dimensions, see page 209).
(2) An EMC filter must be used. It must be ordered separately (dimensions, see page 213 or consult your Regional Sales Office).
(3) When using a DNV kit, the variable speed drive and the transformer for the fan are mounted separately (dimensions, see page 189).

Dimensions
pages 195 to 197

Variable speed drives
Altivar 71
Options: accessories

536946

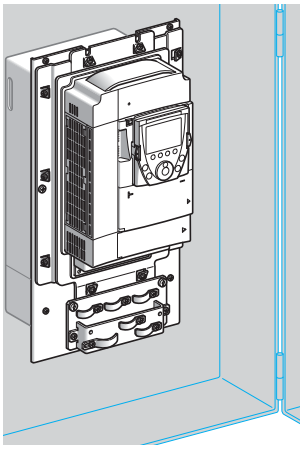

ATV 71HU75N4 flush-mounted drive

536947

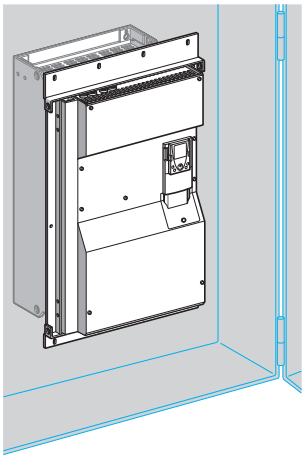

ATV 71HC28N4D flush-mounted drive

Kit for flush-mounting in a dust and damp proof enclosure
(for ATV 71H●●●●● drives on heatsink)

This kit can be used to mount the power section of the drive outside the enclosure (IP 54 degree of protection), which reduces the power dissipated into the enclosure, see page 259.

It is available for ATV 71H●●●M3, ATV 71H●●●M3X, ATV 71HD55M3XD, HD75M3XD, ATV 71H075N4…HC28N4, ATV 71HD90N4D…HC28N4D and ATV 71HU22Y… HC31Y drives.

With this type of mounting, the maximum internal temperature in the enclosure can then reach 60°C without it being necessary to derate the drive current.
Between 50°C and 60°C, a control card fan kit must be used for ATV 71HD18M3X… HD45M3X, ATV 71HD22N4…HD75N4 and ATV 71HU22Y…HD90Y drives to prevent hot spots, see page 27.

The back of the enclosure must be drilled and cut out for this type of mounting.

The kit consists of:
- A metal frame of the right size for the drive rating
- Corner pieces
- Seals
- A fan support. (this can be used to move the fans so that they can be accessed from the front of the enclosure).
- Fixing accessories
- A cutting and drilling template
- A manual.

References

For drives		Reference	Weight kg
ATV 71H037M3…HU15M3 ATV 71H075N4…HU22N4		**VW3 A9 501**	2.700
ATV 71HU22M3…HU40M3 ATV 71HU30N4, HU40N4		**VW3 A9 502**	3.100
ATV 71HU55M3 ATV 71HU55N4, HU75N4		**VW3 A9 503**	3.700
ATV 71HU75M3 ATV 71HD11N4		**VW3 A9 504**	4.600
ATV 71HD11M3X, HD15M3X ATV 71HD15N4, HD18N4		**VW3 A9 505**	4.900
ATV 71HD18M3X, HD22M3X ATV 71HD22N4 ATV 71HU22Y…HD30Y		**VW3 A9 506**	3.900
ATV 71HD30N4, HD37N4		**VW3 A9 507**	4.200
ATV 71HD30M3X…HD45M3X		**VW3 A9 508**	4.900
ATV 71HD45N4…HD75N4 ATV 71HD37Y…HD90Y		**VW3 A9 509**	5.200
ATV 71HD55M3X *(1)* ATV 71HD55M3XD *(2)* ATV 71HD90N4 *(1)* ATV 71HD90N4D *(2)*		**VW3 A9 510**	5.100
ATV 71HD75M3X *(1)* ATV 71HD75M3XD *(2)* ATV 71HC11N4 *(1)* ATV 71HC11N4D *(2)*		**VW3 A9 511**	3.600
ATV 71HC13N4 *(1)* ATV 71HC13N4D *(2)* ATV 71HC11Y…HC16Y *(3)*		**VW3 A9 512**	4.300
ATV 71HC16N4 *(1)* ATV 71HC16N4D *(2)*		**VW3 A9 513**	4.400
ATV 71HC20N4…HC28N4 *(1)* ATV 71HC20N4D…HC28N4D *(2)* ATV 71HC20Y…HC31Y *(3)*	Without braking unit	**VW3 A9 514**	4.700
	With braking unit	**VW3 A9 515**	4.700

(1) Drives supplied as standard with a DC choke. In this case, cut out and drill the enclosure for the choke. See pages 200 and 201.
(2) Drives supplied without DC choke.
(3) Drives supplied as standard with a transformer for the fan. In this case, cut out and drill the enclosure for the transformer. See page 201.

Dimensions:
pages 199 to 201

Variable speed drives
Altivar 71
Options: accessories

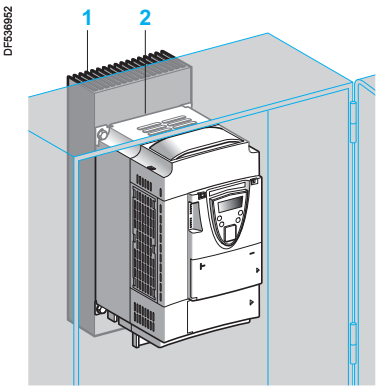

ATV 71PU22N4Z drive in a dust and damp proof enclosure

Kits for mounting in a dust and damp proof enclosure
(for ATV 71P●●●N4Z drives on base plate)

This kit can be used to mount a drive "on base plate" inside a dust and damp proof enclosure (IP 54 degree of protection). Heat is dissipated via a heatsink mounted outside the enclosure.

This type of mounting simply requires that a hole be drilled in the enclosure at the same level as the drive fixing holes used to mount the heatsink.

The kit consists of:
- A heatsink 1
- A thermal liner 2
- Hinged mechanical adapters
- A manual.

Enclosure characteristics
The steel used for the floor-standing or wall-mounted enclosure which is to house the drive must meet the following requirements:
- Thickness 1.5 to 3 mm
- Steel: stainless or paint-finished smooth steel
- Heat-treated epoxy paintwork (lacquer finish not permitted), max. thickness 70 µm, fine or medium texture

References

For drives	Reference	Weight kg
ATV 71P075N4Z…PU22N4Z	**VW3 A9 801**	–
ATV 71PU30N4Z, PU40N4Z	**VW3 A9 802**	–
ATV 71PU55N4Z, PU75N4Z	**VW3 A9 803**	–

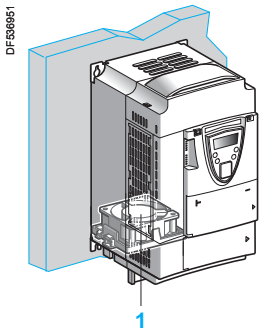

ATV 71PU22N4Z drive with fan VZ3 V1 203

Fan for variable speed drives on base plate
This fan 1 is required for ATV 71P●●●N4Z drives if they are not equipped with a DC choke (see page 152).

It is mounted on the lower part of the drive, thereby enabling installation dimensions to be optimized. It is powered by the drive.

References

For drives	Reference	Weight kg
ATV 71P075N4Z…PU22N4Z	**VZ3 V1 203**	–
ATV 71PU30N4Z, PU40N4Z	**VZ3 V1 209**	–
ATV 71PU55N4Z, PU75N4Z	**VZ3 V1 204**	–
ATV 71PD11N4Z	**VZ3 V1 210**	–

Dimensions:
page 202

Variable speed drives
Altivar 71
Options: accessories

534544

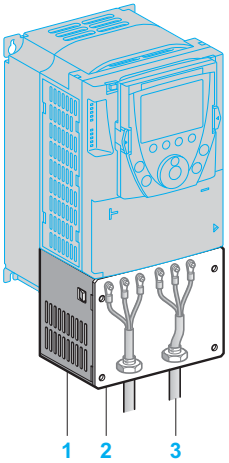

536950

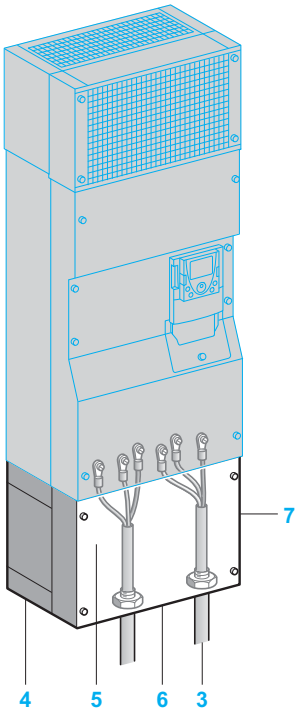

UL Type 1 conformity kits

Kit for UL Type 1 conformity (mounting outside the enclosure)

When the drive is mounted directly on a wall outside the enclosure, this kit can be used to ensure UL Type 1 conformity when connecting the cables with a tube.
The shielding is connected inside the kit.

For ATV 71H●●●M3, ATV 71HD11M3X…HD45M3X, ATV 71H075N4…HD75N4, ATV 71P●●●N4Z and ATV 71HU22Y…HD90Y drives, the kit consists of:
- All the mechanical fittings 1 including a pre-cut plate 2 for connecting the tubes 3
- Fixing accessories
- A manual.

For ATV 71HD55M3X, HD75M3X, ATV 71HD90N4…HC28N4, ATV 71HD90N4D…HC28N4D and ATV 71HC11Y…HC31Y drives, the kit consists of:
- An IP 54 casing 4 used to maintain the IP 54 degree of protection for the power section
- An EMC plate 5
- A UL Type 1 cover 7
- A pre-drilled plate 6 for connecting the tubes 3
- Fixing accessories
- A manual.

References

For drives		Reference	Weight kg
ATV 71H037M3…HU15M3 ATV 71H075N4...HU22N4 ATV 71P075N4Z…PU22N4Z		**VW3 A9 201**	1.300
ATV 71HU22M3…HU40M3 ATV 71HU30N4, HU40N4 ATV 71PU30N4Z, PU40N4Z		**VW3 A9 202**	1.500
ATV 71HU55M3 ATV 71HU55N4, HU75N4 ATV 71PU55N4Z, PU75N4Z		**VW3 A9 203**	1.800
ATV 71HU75M3 ATV 71HD11N4		**VW3 A9 204**	2.000
ATV 71HD11M3X, HD15M3X ATV 71HD15N4, HD18N4		**VW3 A9 205**	2.800
ATV 71HD18M3X, HD22M3X ATV 71HD22N4 ATV 71HU22Y…HD30Y		**VW3 A9 206**	4.000
ATV 71HD30N4, HD37N4		**VW3 A9 207**	5.000
ATV 71HD30M3X…HD45M3X		**VW3 A9 217**	7.000
ATV 71HD45N4…HD75N4 ATV 71HD37Y…HD90Y		**VW3 A9 208**	7.200
ATV 71HD55M3X *(1)* ATV 71HD55M3XD *(2)* ATV 71HD90N4 *(1)* ATV 71HD90N4D *(2)*		**VW3 A9 209**	9.400
ATV 71HD75M3X *(1)* ATV 71HD75M3XD *(2)* ATV 71HC11N4 *(1)* ATV 71HC11N4D *(2)*		**VW3 A9 210**	11.800
ATV 71HC13N4 *(1)* ATV 71HC13N4D *(2)* ATV 71HC11Y…HC16Y *(3)*		**VW3 A9 211**	11.600
ATV 71HC16N4 *(1)* ATV 71HC16N4D *(2)*		**VW3 A9 212**	14.600
ATV 71HC20N4…HC28N4 *(1)* ATV 71HC20N4D…HC28N4D *(2)* ATV 71HC20Y…HC31Y *(3)*	Without braking unit	**VW3 A9 213**	19.500
	With braking unit	**VW3 A9 214**	19.500

(1) Drives supplied as standard with a DC choke.
(2) Drives supplied without DC choke.
(3) Drives supplied as standard with a transformer for the fan.

Dimensions
pages 202 and 203

Variable speed drives

Altivar 71

Options: accessories

536948

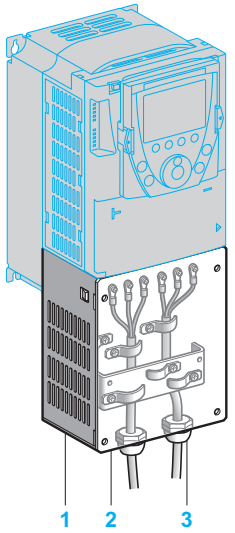

Kit for IP 21 conformity

536949

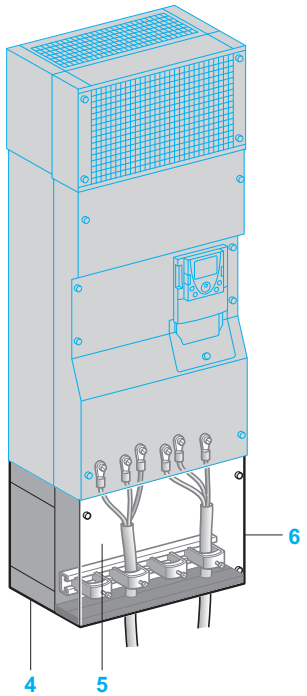

Kit for IP 31 conformity

Kit for IP 21 or IP 31 conformity (mounting outside the enclosure)

When the drive is mounted directly on a wall outside the enclosure, this kit can be used to ensure IP 21 or IP 31 degree of protection when connecting the cables with a cable gland.
The shielding is connected inside the kit.

For ATV 71H●●●M3, ATV 71HD11M3X…HD45M3X, ATV 71H075N4…HD75N4, ATV 71P●●●N4Z and ATV 71HU22Y…HD90Y drives, the kit conforms to IP 21 degree of protection. It consists of:
- All the mechanical fittings 1 including a drilled plate 2 for fixing the cable glands 3
- Fixing accessories
- A manual.

For ATV 71HD55M3X, HD75M3X, ATV 71HD90N4…HC50N4 and ATV 71HC11Y…HC63Y drives, the kit conforms to IP 31 degree of protection. It consists of:
- An IP 54 casing 4 used to maintain the IP 54 degree of protection for the power section
- An EMC plate with cable clamps 5
- An IP 31 cover 6
- Fixing accessories
- A manual.

References

For drives		Degree of protection	Reference	Weight kg
ATV 71H037M3…HU15M3 ATV 71H075N4…HU22N4 ATV 71P075N4Z…PU22N4Z		IP 21	**VW3 A9 101**	1.300
ATV 71HU22M3…HU40M3 ATV 71HU30N4, HU40N4 ATV 71PU30N4Z, PU40N4Z		IP 21	**VW3 A9 102**	1.500
ATV 71HU55M3 ATV 71HU55N4, HU75N4 ATV 71PU55N4Z, PU75N4Z		IP 21	**VW3 A9 103**	1.800
ATV 71HU75M3 ATV 71HD11N4		IP 21	**VW3 A9 104**	2.000
ATV 71HD11M3X, HD15M3X ATV 71HD15N4, HD18N4		IP 21	**VW3 A9 105**	2.800
ATV 71HD18M3X, HD22M3X ATV 71HD22N4 ATV 71HU22Y…HD30Y		IP 21	**VW3 A9 106**	4.000
ATV 71HD30N4, HD37N4		IP 21	**VW3 A9 107**	5.000
ATV 71HD30M3X…HD45M3X		IP 21	**VW3 A9 117**	7.000
ATV 71HD45N4…HD75N4 ATV 71HD37Y…HD90Y		IP 21	**VW3 A9 108**	7.000
ATV 71HD55M3X *(1)* ATV 71HD55M3XD *(2)* ATV 71HD90N4 *(1)* ATV 71HD90N4D *(2)*		IP 31	**VW3 A9 109**	9.400
ATV 71HD75M3X *(1)* ATV 71HD75M3XD *(2)* ATV 71HC11N4 *(1)* ATV 71HC11N4D *(2)*		IP 31	**VW3 A9 110**	11.800
ATV 71HC13N4 *(1)* ATV 71HC13N4D *(2)* ATV 71HC11Y…HC16Y *(3)*		IP 31	**VW3 A9 111**	11.600
ATV 71HC16N4 *(1)* ATV 71HC16N4D *(2)*		IP 31	**VW3 A9 112**	14.600
ATV 71HC20N4…HC28N4 *(1)* ATV 71HC20N4D…HC28N4D *(2)* ATV 71HC20Y…HC31Y *(3)*	Without braking unit	IP 31	**VW3 A9 113**	19.500
	With braking unit	IP 31	**VW3 A9 114**	19.500
ATV 71HC31N4, HC40N4 *(1)* ATV 71HC31N4D, HC40N4D *(2)*		IP 31	**VW3 A9 115**	25.000
ATV 71HC50N4 *(1)* ATV 71HC50N4D *(2)* ATV 71HC40Y…HC63Y *(3)*		IP 31	**VW3 A9 116**	35.000

(1) Drives supplied as standard with a DC choke.
(2) Drives supplied without DC choke.
(3) Drives supplied as standard with a transformer for the fan.

Dimensions:
pages 202 and 203

Variable speed drives
Altivar 71
Options: accessories

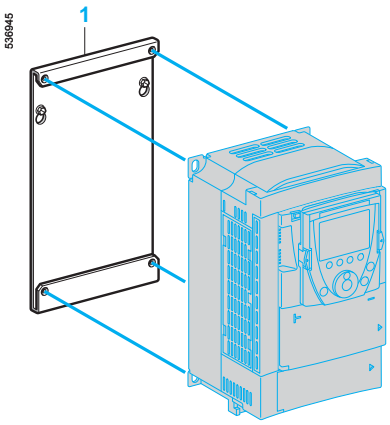

Substitution kit VW3 A9 304

Substitution kit for Altivar 58 or Altivar 58F drives

This kit 1 is used to fit an Altivar 71 drive in the place of an Altivar 58 or Altivar 58F drive using the same fixing holes. It includes the mechanical adapters required for mounting.

High torque application (170% Tn)

Old drive	Motor Power kW	Motor Power *HP*	Replaced by	Reference	Weight kg
Supply voltage 200…240 V single phase					
ATV 58HU09M2	0.37	*0.5*	ATV 71H075M3	**VW3 A9 301**	–
ATV 58HU18M2	0.75	*1*	ATV 71HU15M3	**VW3 A9 301**	–
ATV 58HU29M2	1.5	*2*	ATV 71HU22M3	**VW3 A9 303**	–
ATV 58HU41M2	2.2	*3*	ATV 71HU30M3	**VW3 A9 303**	–
ATV 58HU72M2	3	–	ATV 71HU40M3	**VW3 A9 304**	–
ATV 58HU90M2	4	*5*	ATV 71HU55M3	**VW3 A9 306**	–
ATV 58HD12M2	5.5	*7.5*	ATV 71HU75M3	**VW3 A9 307**	–
Supply voltage 200…240 V three-phase					
ATV 58HU29M2	1.5	*2*	ATV 71HU15M3	**VW3 A9 302**	–
ATV 58HU41M2	2.2	*3*	ATV 71HU22M3	**VW3 A9 303**	–
ATV 58HU54M2	3	–	ATV 71HU30M3	**VW3 A9 304**	–
ATV 58HU72M2	4	*5*	ATV 71HU40M3	**VW3 A9 304**	–
ATV 58HU90M2	5.5	*7.5*	ATV 71HU55M3	**VW3 A9 306**	–
ATV 58HD12M2	7.5	*10*	ATV 71HU75M3	**VW3 A9 307**	–
ATV 58HD16M2X	11	*15*	ATV 71HD11M3X	**VW3 A9 309**	–
ATV 58HD23M2X	15	*20*	ATV 71HD15M3X	**VW3 A9 309**	–
ATV 58HD28M2X	18.5	*25*	ATV 71HD18M3X	**VW3 A9 312**	–
ATV 58HD33M2X	22	*30*	ATV 71HD22M3X	**VW3 A9 312**	–
ATV 58HD46M2X	30	*40*	ATV 71HD30M3X	**VW3 A9 314**	–
Supply voltage 380…480 V three-phase					
ATV 58HU18N4	0.75	*1*	ATV 71H075N4	**VW3 A9 302**	–
ATV 58HU29N4	1.5	*2*	ATV 71HU15N4	**VW3 A9 302**	–
ATV 58HU41N4	2.2	*3*	ATV 71HU22N4	**VW3 A9 302**	–
ATV 58HU54N4	3	–	ATV 71HU30N4	**VW3 A9 304**	–
ATV 58HU72N4	4	*5*	ATV 71HU40N4	**VW3 A9 304**	–
ATV 58HU90N4	5.5	*7.5*	ATV 71HU55N4	**VW3 A9 305**	–
ATV 58HD12N4	7.5	*10*	ATV 71HU75N4	**VW3 A9 306**	–
ATV 58HD16N4	11	*15*	ATV 71HD11N4	**VW3 A9 307**	–
ATV 58HD23N4	15	*20*	ATV 71HD15N4	**VW3 A9 308**	–
ATV 58HD28N4	18.5	*25*	ATV 71HD18N4	**VW3 A9 309**	–
ATV 58HD33N4	22	*30*	ATV 71HD22N4	**VW3 A9 310**	–
ATV 58HD46N4	30	*40*	ATV 71HD30N4	**VW3 A9 310**	–
ATV 58HD54N4	37	*50*	ATV 71HD37N4	**VW3 A9 312**	–
ATV 58HD64N4	45	*60*	ATV 71HD45N4	**VW3 A9 312**	–
ATV 58HD79N4	55	*75*	ATV 71HD55N4	**VW3 A9 312**	–
Supply voltage 500 V three-phase					
ATV 58HU18N4	0.75	*1*	ATV 71HU22Y	**VW3 A9 310**	–
ATV 58HU29N4	1.5	*2*	ATV 71HU22Y	**VW3 A9 310**	–
ATV 58HU41N4	2.2	*3*	ATV 71HU30Y	**VW3 A9 310**	–
ATV 58HU54N4	3	–	ATV 71HU40Y	**VW3 A9 310**	–
ATV 58HU72N4	4	*5*	ATV 71HU55Y	**VW3 A9 310**	–
ATV 58HU90N4	5.5	*7.5*	ATV 71HU75Y	**VW3 A9 310**	–
ATV 58HD12N4	7.5	*10*	ATV 71HD11Y	**VW3 A9 310**	–
ATV 58HD16N4	11	*15*	ATV 71HD15Y	**VW3 A9 310**	–
ATV 58HD23N4	15	*20*	ATV 71HD18Y	**VW3 A9 310**	–
ATV 58HD28N4	18.5	*25*	ATV 71HD22Y	**VW3 A9 310**	–
ATV 58HD33N4	22	*30*	ATV 71HD30Y	**VW3 A9 310**	–
ATV 58HD46N4	30	*40*	ATV 71HD37Y	**VW3 A9 312**	–
ATV 58HD54N4	37	*50*	ATV 71HD45Y	**VW3 A9 312**	–
ATV 58HD64N4	45	*60*	ATV 71HD55Y	**VW3 A9 312**	–
ATV 58HD79N4	55	*75*	ATV 71HD75Y	**VW3 A9 312**	–

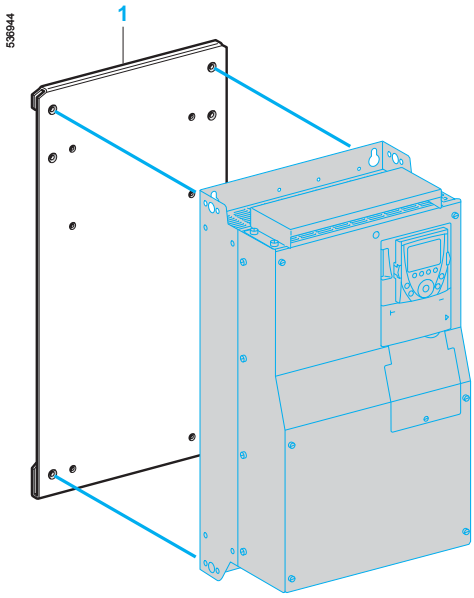

Substitution kit VW3 A9 312

Substitution kit for Altivar 58 or Altivar 58F drives (continued)

Standard torque application (120% Tn)

Old drive	Motor Power kW	Motor Power *HP*	Replaced by	Reference	Weight kg
Supply voltage 200…240 V three-phase					
ATV 58HD16M2X	15	*20*	ATV 71HD15M3X	**VW3 A9 309**	–
ATV 58HD23M2X	18.5	*25*	ATV 71HD18M3X	**VW3 A9 310**	–
ATV 58HD28M2X	22	*30*	ATV 71HD22M3X	**VW3 A9 312**	–
ATV 58HD33M2X	30	*40*	ATV 71HD30M3X	**VW3 A9 312**	–
ATV 58HD46M2X	37	*50*	ATV 71HD37M3X	**VW3 A9 312**	–
Supply voltage 380…480 V three-phase					
ATV 58HD28N4	22	*30*	ATV 71HD22N4	**VW3 A9 310**	–
ATV 58HD33N4	30	*40*	ATV 71HD30N4	**VW3 A9 310**	–
ATV 58HD46N4	37	*50*	ATV 71HD37N4	**VW3 A9 310**	–
ATV 58HD54N4	45	*60*	ATV 71HD45N4	**VW3 A9 312**	–
ATV 58HD64N4	55	*75*	ATV 71HD55N4	**VW3 A9 312**	–
ATV 58HD79N4	75	*100*	ATV 71HD75N4	**VW3 A9 312**	–
Supply voltage 500 V three-phase					
ATV 58HD28N4	22	*30*	ATV 71HD30Y	**VW3 A9 310**	–
ATV 58HD33N4	30	*40*	ATV 71HD37Y	**VW3 A9 312**	–
ATV 58HD46N4	37	*50*	ATV 71HD45Y	**VW3 A9 312**	–
ATV 58HD54N4	45	*60*	ATV 71HD55Y	**VW3 A9 312**	–
ATV 58HD64N4	55	*75*	ATV 71HD75Y	**VW3 A9 312**	–
ATV 58HD79N4	75	*100*	ATV 71HD90Y	**VW3 A9 312**	–

Variable speed drive

Altivar 71

Pre-equipped IP 54 floor-standing enclosure kit

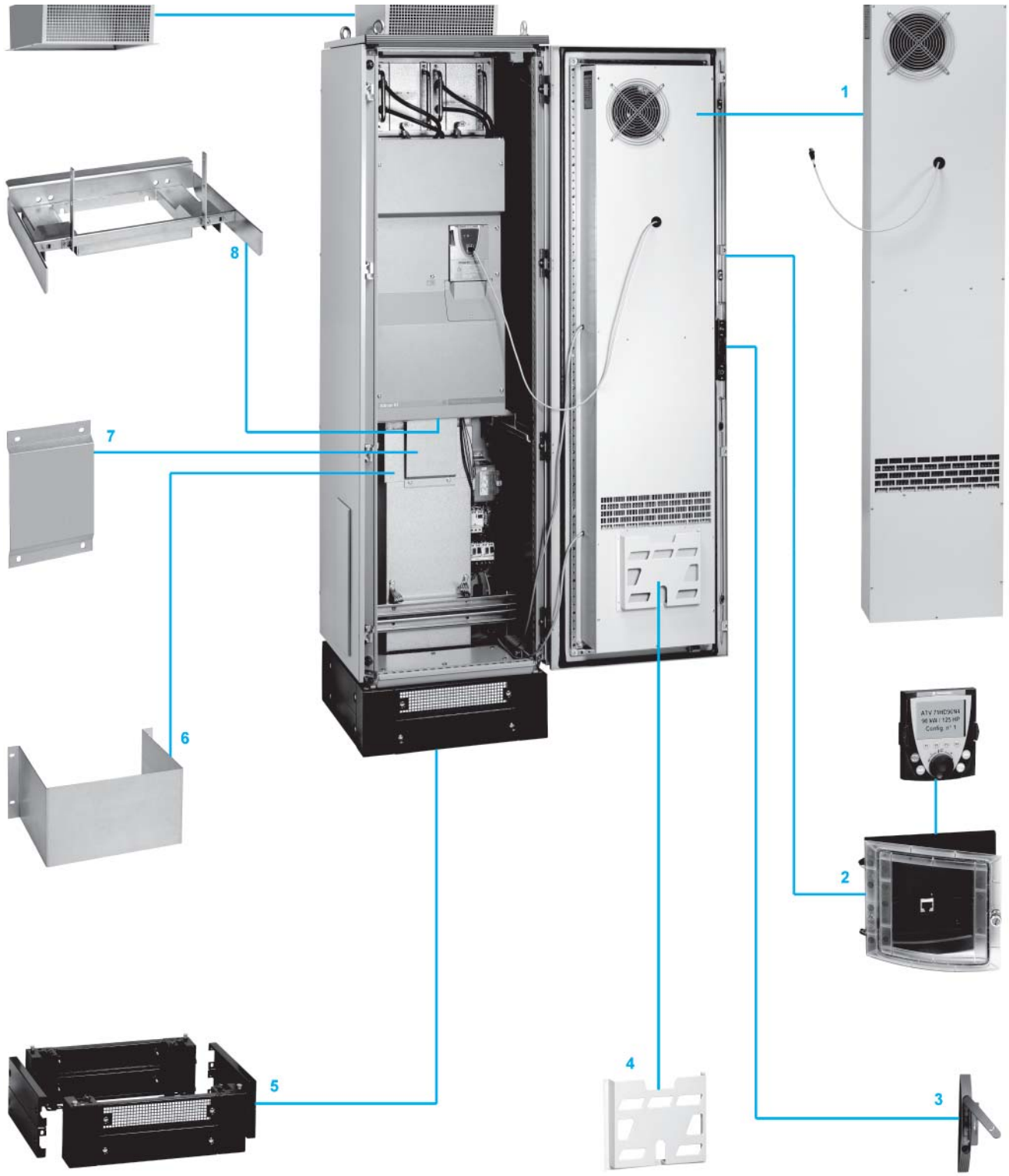

Variable speed drive

Altivar 71

Pre-equipped IP 54 floor-standing enclosure kit

Presentation

The pre-equipped kit solution is used to create an IP 54 certified floor-standing enclosure for 90 kW to 500 kW UL Type 1/IP 20 Altivar 71 variable speed drives for a 380…480 V three-phase power supply.

This kit has been designed to:
- Reduce the implementation time with:
  - Simplified assembly
  - Optimized thermal and mechanical dimensioning

The cooling systems used enable the equipment to be installed in difficult and dusty environments.
There are two types of cooling:
- Kits **VW3 A9 541** and **VW3 A9 542** with a single air circuit for the power section
- Kits **VW3 A9 543**…**548** with two separate air circuits:
  - One for the power section
  - One for the control section

So that the air circuit for the control section is not contaminated, an air/air heat exchanger is incorporated in the enclosure door (see page 38).

Description

The kit consists of:
- Air/air heat exchanger (except for enclosure kits **VW3 A9 541** and **VW3 A9 542**) 1
- IP 65 graphic display terminal remote mounting kit 2
- Handle with a pushbutton-operated opening mechanism 3
- Document holder 4
- Plinth 5
- Lower air duct 6
- EMC plate 7
- Drive support 8
- Roof extension 9
- Upper air duct
- Altivar 71 and 61 identification labels
- 24 V ⎓, 600 mA supplementary power supply
- Fixing accessories
- Seals
- Technical documentation containing all the:
  - Parts lists
  - Electrical diagrams
  - Mechanical assembly drawings

Options

For adding accessories or options, there are two additional 600 and 800 mm empty enclosure kits supplied in kit form.
The additional empty enclosure kit must be installed on the left side of the pre-equipped IP 54 enclosure kit. In this case, the left-hand panel of the pre-equipped IP 54 enclosure kit is mounted on the left side of the additional empty enclosure kit which is supplied without side panels.

Variable speed drive
Altivar 71
Pre-equipped IP 54 floor-standing enclosure kit

Ventilation

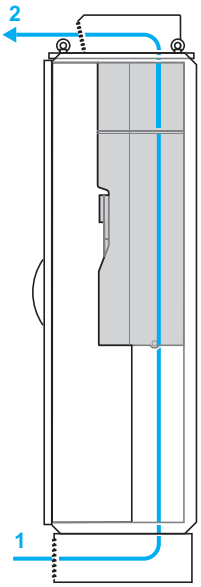

VW3 A9 541, VW3 A9 542

The enclosure ventilation is optimized using a single air circuit cooling the power section.

Power section:
1 Air inlet via the plinth
2 Air outlet located on the enclosure roof

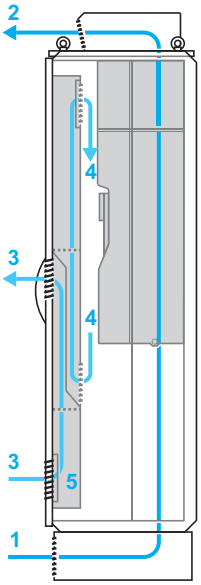

VW3 A9 543…A9 548

The enclosure ventilation is optimized using two separate air circuits cooling the power section and the control section.
The air circulating in the power section is isolated from the control section thereby ensuring better protection against the entry of contaminants (in hostile and dusty environments).

Power section:
1 Air inlet via the plinth
2 Air outlet located on the enclosure roof

Control section:
Cooling system using an air/air exchanger:
3 External air circuit for cooling the exchanger 5
4 Internal air circuit cooled by the exchanger 5

Characteristics

Maximum temperature	■ + 45°C outside the enclosure ■ + 50°C inside the enclosure (internal temperature monitored by a thermostat which stops the equipment)
Colour of SAREL Spacial 6000 Cell Enclosure	RAL 7032 for case RAL 7022 for plinth
Connections	Cable entries via the enclosure bottom or from the left
Available internal supplies	■ 1 x 24 V ⎓ drive supply (min. 21 V, max. 27 V), maximum current 200 mA ■ 1 x 24 V ⎓ additional supply, maximum current 600 mA
Accessories *(1)*	SAREL Spacial 6000 Cell compatible

(1) Please refer to the website www.sarel.fr

Presentation: pages 36 and 37
References: page 39
Dimensions: pages 40 to 45

Variable speed drive

Altivar 71

Pre-equipped IP 54 floor-standing enclosure kit

536719

VW3 A9 543…A9 546

References

Description	Used with	Reference	Weight kg
Pre-equipped IP 54 floor-standing enclosure kit	ATV 71HD90N4 *(1)*	**VW3 A9 541**	220.000
	ATV 71HC11N4 *(1)*	**VW3 A9 542**	220.000
	ATV 71HC13N4 *(1)*	**VW3 A9 543**	252.000
	ATV 71HC16N4 *(1)*	**VW3 A9 544**	252.000
	ATV 71HC20N4 *(1)* without braking unit ATV 71HC25N4 *(1)* without braking unit ATV 71HC28N4 *(1)* without braking unit	**VW3 A9 545**	300.000
	ATV 71HC20N4 *(1)* with braking unit VW3 A7 101 *(2)* ATV 71HC25N4 *(1)* with braking unit VW3 A7 101 *(2)* ATV 71HC28N4 *(1)* with braking unit VW3 A7 101 *(2)*	**VW3 A9 546**	300.000
	ATV 71HC31N4 *(1)* without braking unit ATV 71HC40N4 *(1)* without braking unit	**VW3 A9 547**	360.000
	ATV 71HC50N4 *(1)* without braking unit	**VW3 A9 548**	470.000
	VW3 A7 102 *(2)*	**VW3 A9 549**	252.000
Empty enclosure kit additionnal 600 mm	Options and accessories *(3)*	**VW3 A9 550**	200.000
Empty enclosure kit additionnal 800 mm	Options and accessories *(3)*	**VW3 A9 551**	210.000

(1) Drive to be ordered separately, see page 23.
*(2) To be ordered separately, see page 135. Braking unit **VW3 A7 102** for ATV 71HC31N4…HC50N4 variable speed drives.*
(3) For any additional information, please consult your Regional Sales Office.

Presentation: pages 36 and 37
Characteristics: page 38
Dimensions: pages 40 to 45

Variable speed drive

Altivar 71

Pre-equipped IP 54 floor-standing enclosure kit

VW3 A9 541, 542 *(1)*

Assembled kit

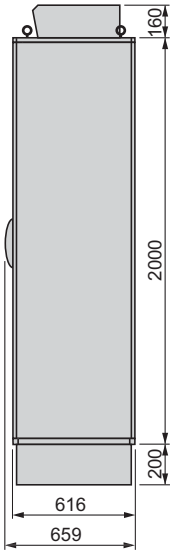

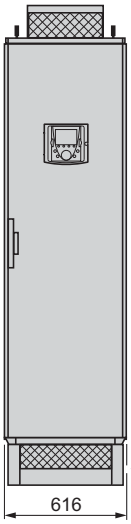

Fixing the kit to the floor

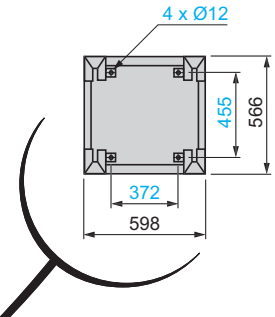

VW3 A9 543…546 *(1)*

Assembled kit

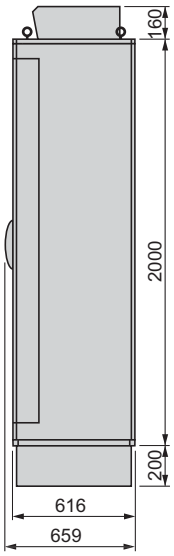

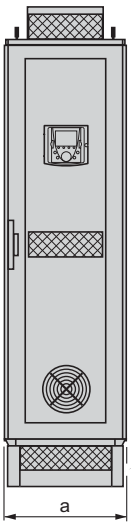

Fixing the kit to the floor

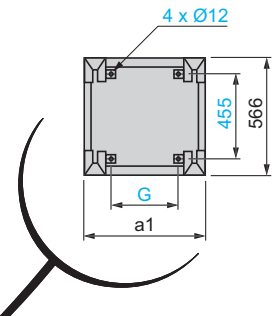

VW3	a	a1	G
A9 543	616	598	372
A9 544	616	598	372
A9 545	816	798	572
A9 546	816	798	572

(1) For detail of location of terminals, see page 43.

Variable speed drive

Altivar 71

Pre-equipped IP 54 floor-standing enclosure kit

VW3 A9 547, 548 *(1)*

Assembled kit

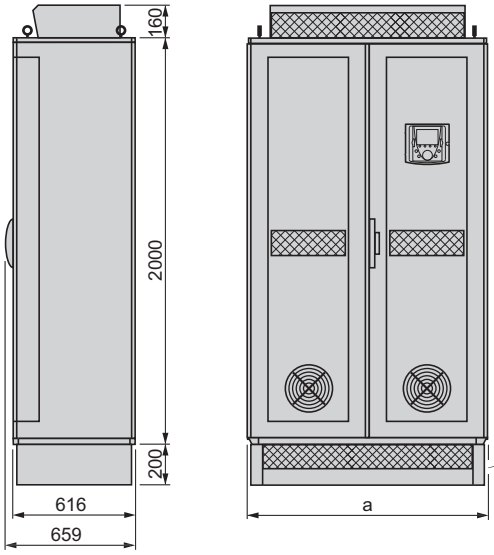

Fixing the kit to the floor

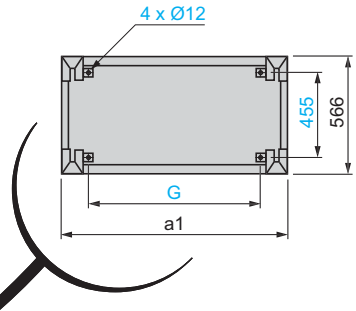

VW3	a	a1	G
A9 547	1016	998	772
A9 548	1216	1198	972

VW3 A9 549 *(1)*

Assembled kit

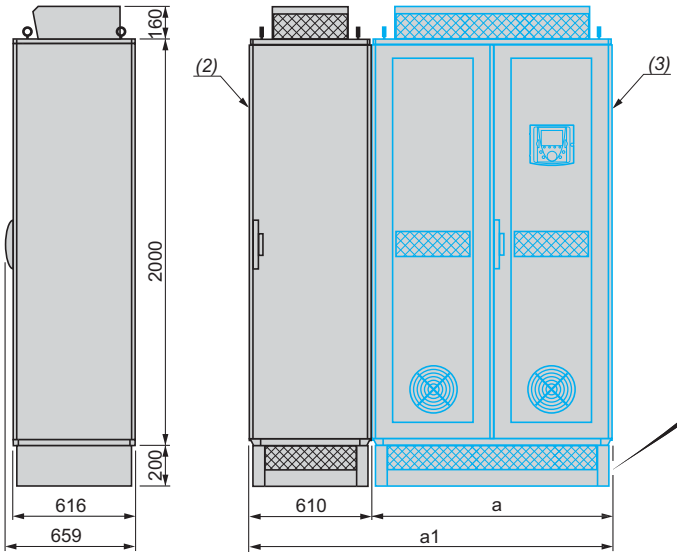

Fixing the kits to the floor

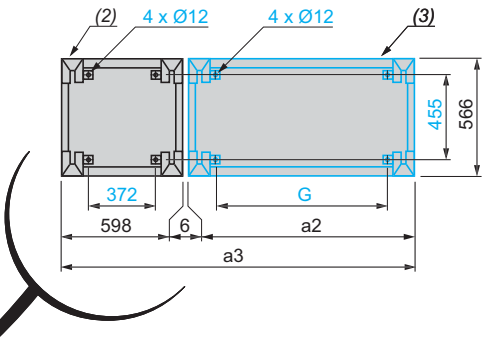

***Note**: The VW3 A9 549 enclosure must be mounted on the left of the VW3 A9 547 and VW3 A9 548 pre-equipped IP 54 enclosure kits*

VW3	a	a1	a2	a3	G
A9 549 + A9 547	1010	1620	998	1602	772
A9 549 + A9 548	1210	1820	1198	1802	972

(1) For detail of location of terminals, see pages 44 and 45.
*(2) IP 54 pre-equipped enclosure kit **VW3 A9 549***
*(3) IP 54 pre-equipped enclosure kits **VW3 A9 547** and **VW3 A9 548***

VW3 A9 550, 551
Assembled kit

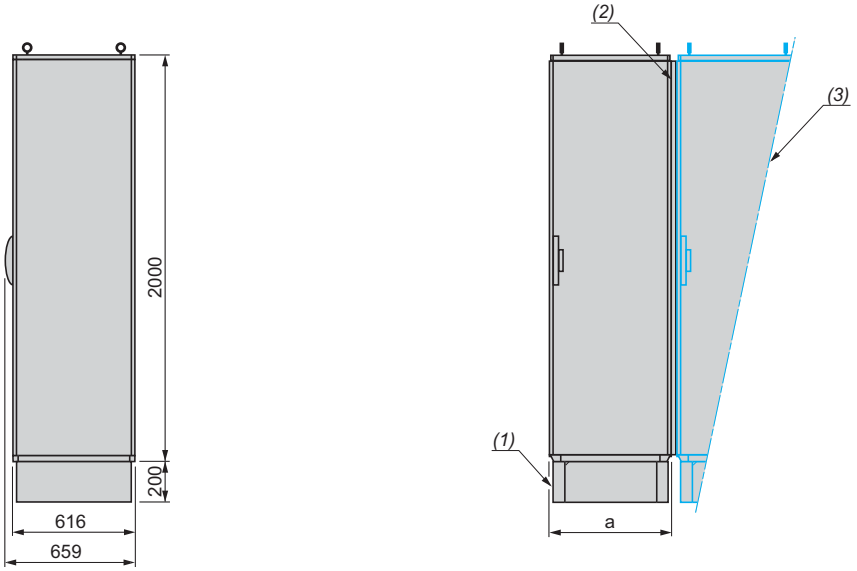

***Note**: The VW3 A9 550 and VW3 A9 551 empty enclosures must be mounted on the left of the VW3 A9 541…549 pre-equipped IP 54 enclosure kits*

VW3	a
A9 550	610
A9 551	810

(1) Plinth
(2) Seal. For each empty enclosure added, allow for a spacing of 4 mm due to the seal.
*(3) IP 54 pre-equipped enclosure kit **VW3 A9 541…549***

Variable speed drive

Altivar 71

Pre-equipped IP 54 floor-standing enclosure kit

Detail of location of terminals

VW3 A9 541...VW3 A9 544

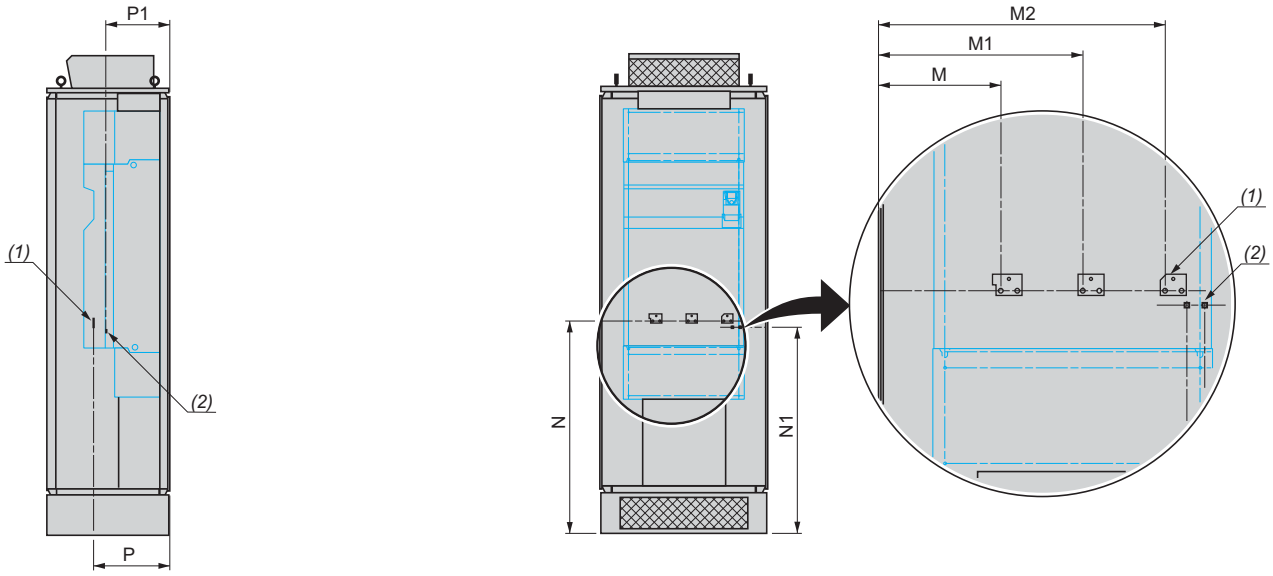

VW3	M	M1	M2	N	N1	P	P1
A9 541	240	300	360	1235	1200	355	285
A9 542	215	275	335	1335	1270	385	320
A9 543	225	300	375	1060	1025	380	320
A9 544	205	310	415	1065	1030	380	320

VW3 A9 545, VW3 A9 546

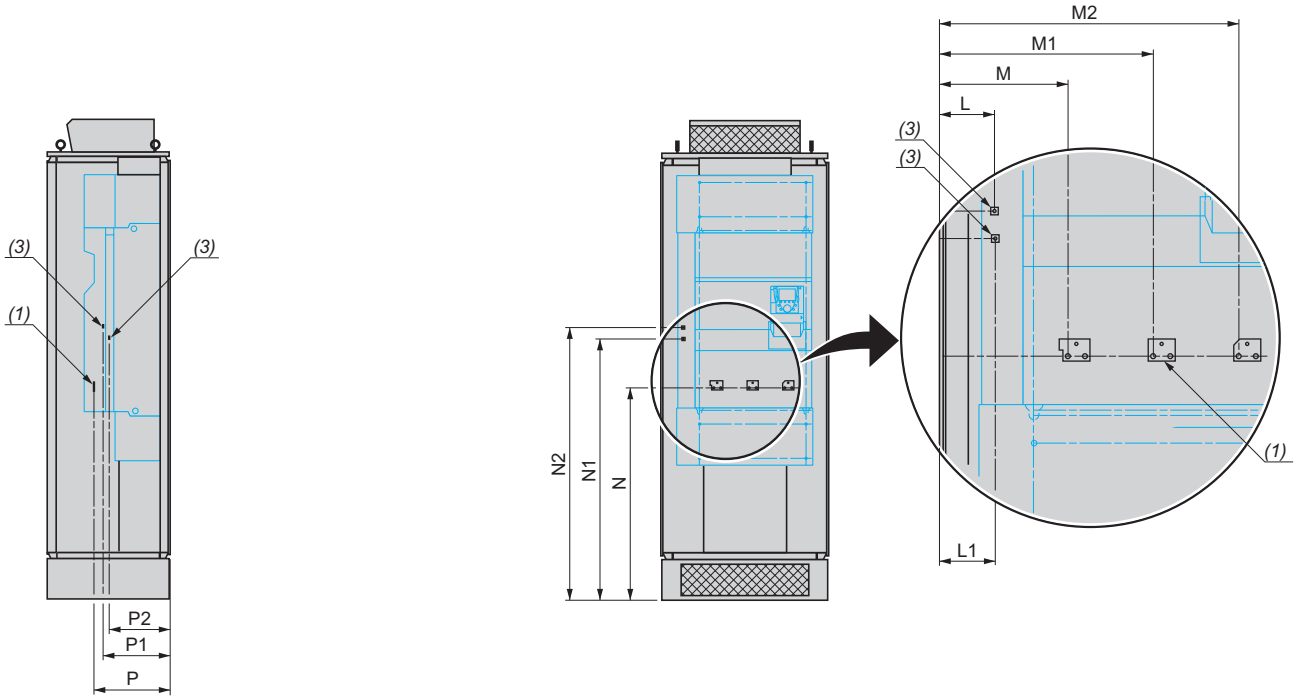

VW3	L	L1	M	M1	M2	N	N1	N2	P	P1	P2
A9 545	–	–	275	450	625	1055	–	–	380	–	–
A9 546	125	127	275	450	625	1055	1295	1355	380	335	305

(1) Terminals for connecting the motor.
(2) Terminals for connecting the braking transistor.
*(3) Terminals for connecting the braking unit **VW3 A7 101**.*

Presentation:
pages 36 and 37

Characteristics:
page 38

References:
page 39

Detail of location of terminals (continued)

VW3 A9 547, 548

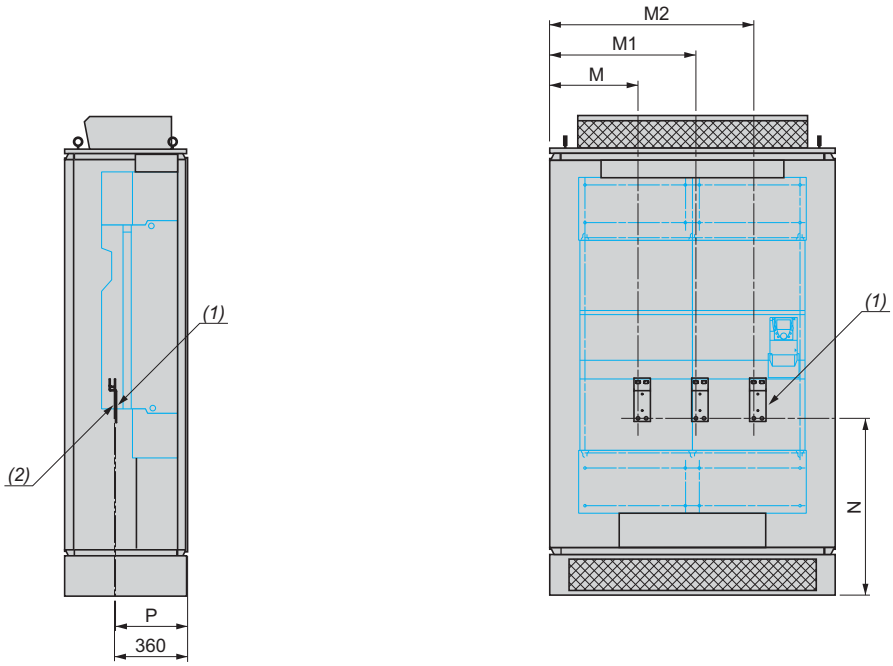

VW3	M1	M2	M3	N	P
A9 547	235	330	425	860	360
A9 548	255	350	445	870	360

(1) Terminals for connecting the motor.
*(2) Terminals for connecting the braking unit **VW3 A7 102**.*

Detail of location of terminals (continued)

VW3 A9 549

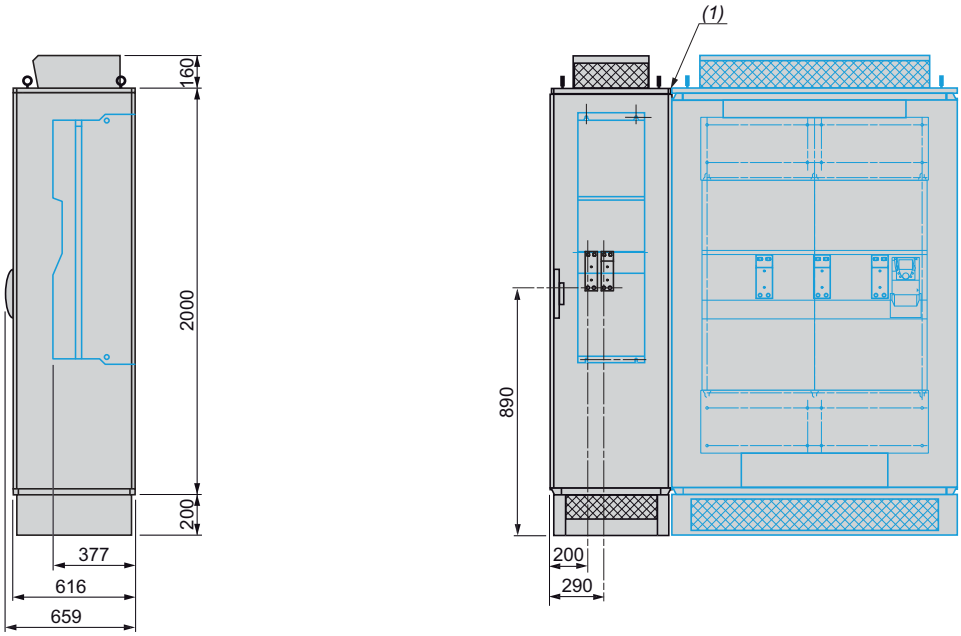

***Note**: The VW3 A9 550 and VW3 A9 551 empty enclosures must be mounted on the left of the VW3 A9 547 and VW3 A9 548 pre-equipped IP 54 enclosure kits*

(1) Seal. For each empty enclosure added, allow for a spacing of 4 mm due to the seal.

Variable speed drives

Altivar 71

IP 23 or IP 54 floor-standing enclosure compact version

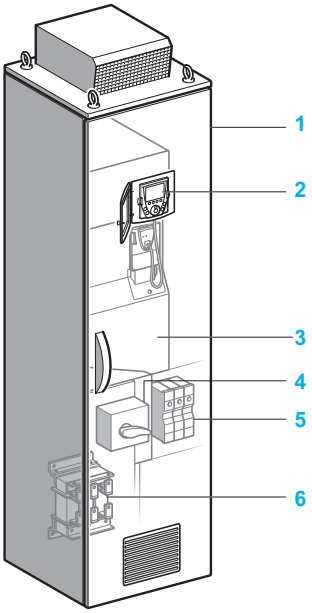

Presentation

Altivar 71 variable speed drives can be supplied ready-assembled in an IP 23 or IP 54 floor-standing enclosure to facilitate installation and setup and, in particular, to ensure optimum ventilation.
The ATV 71EXC●●●●●● offer consists of a compact floor-standing enclosure providing IP 23 or IP 54 protection with common cooling circuit for industrial environments and infrastructures.
The enclosure is supplied ready to connect.

The ATV 71EXC●●●●●● offer covers motor power ratings from 90 kW to 630 kW with three types of power supply:
- 380…415 V three-phase, 90 kW to 500 kW (**ATV 71EXC●●●●N4**)
- 500 V three-phase, 90 kW to 500 kW (**ATV 71EXC●●●●N**)
- 600…690 V three-phase, 110 kW to 630 kW (**ATV 71EXC●●●●Y**)

The ATV 71EXC●●●●●● offer includes the choice of:
- A standard compact offer
- A modular offer in which a wide selection of options can be incorporated according to the rating of the drive.

The standard compact offer

It consists of:
- A wired, ready-assembled Sarel “Spacial 6000” enclosure 1
- A drive on heatsink, ATV 71HD90N4D…HC50N4D or ATV 71HC11Y…HC63Y 3
- An IP 65 remote mounting kit for graphic display terminal 2
- A switch and fast-acting semi-conductor fuses 4
- Motor terminals 5
- A line choke 6

See pages 52 and 53.

Modular offer

It consists of:
- The standard compact offer
- One or more options (see pages 54 to 59)

As well as these specific options, all the options available for Altivar 71 drives can be used at the same rating with the enclosed drives offer (see pages 178, 179 and 184 to 187).
For any configuration other than those shown on pages 54 to 59, please consult your Regional Sales Office.

Common options (modular offer only)

- Adapter for 115 V ∼ logic inputs
- Encoder interface cards
- I/O extension cards
- "Controller Inside" programmable card
- Modbus TCP, Fipio, Modbus/Uni-Telway, Modbus Plus, EtherNet/IP, DeviceNet, PROFIBUS DP, InterBus and CC-Link communication cards
- PT100 relays
- Motor heater
- Additional 24 V ⎓ power supply
- Emergency stop button
- Enclosure lighting
- Key switch (Local Remote)
- Power supply circuit for external fan

See pages 54 and 55.

Options dependent on the drive rating (modular offer only)

- Braking unit
- Isolating handle for switch
- Circuit-breaker
- Line contactor
- Control transformer
- Ammeter
- Enclosure heater
- Motor choke
- Sinus filter
- Cable entry via the top
- Plinth
- Etc.

See pages 56 to 59.

Ventilation

IP 23 compact version

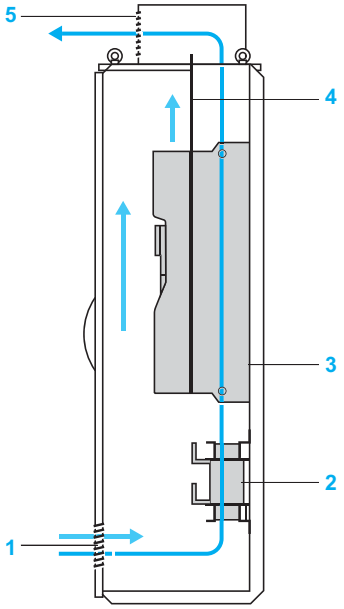

One common air circuit provides optimum enclosure ventilation, cooling the power section and the control section.

1 Air entry via an intake grille (without filter) located on the enclosure door
2 Line choke
3 Fan integrated in the drive for ventilating the power section
4 Separating plate to prevent internal turbulence.
5 Air outlet via a metal cover with protection against water splashes, on the enclosure roof

IP 54 compact version

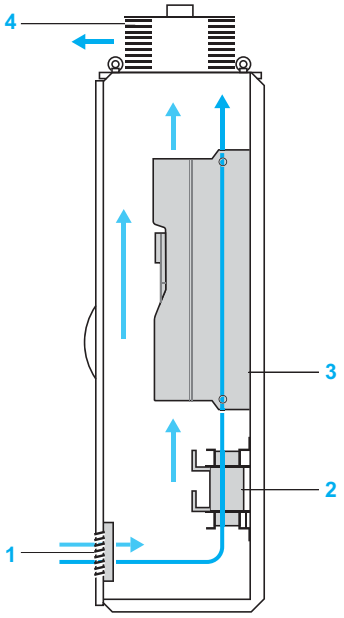

One common air circuit provides optimum enclosure ventilation, cooling the power section and the control section.

1 Air entry via an intake grille (with protective filter) located on the enclosure door
2 Line choke
3 Fan integrated in the drive for ventilating the power section
4 Air outlet via a fan with filter, on the enclosure roof

Variable speed drives

Altivar 71

IP 23 or IP 54 floor-standing enclosure compact version

Specific characteristics				
Enclosure degree of protection		ATV 71EXC2●●●N4 ATV 71EXC2●●●N ATV 71EXC2●●●Y		IP 23: ■ Air intake via a grille on the enclosure door ■ Air outlet on the enclosure roof
		ATV 71EXC5●●●N4 ATV 71EXC5●●●N ATV 71EXC5●●●Y		IP 54: ■ Air intake via a grille (with filter) on the enclosure door ■ Air outlet via a fan (with filter) on the enclosure roof
Line supply connection				At the base of the switch
Motor connection		ATV 71EXC●D90N4…C28N4 ATV 71EXC●D90N…C25N ATV 71EXC●C11Y…C31Y		On the terminals
		ATV 71EXC●C31N4…C50N4		On the bars of the fan
		ATV 71EXC●C31N…C50N ATV 71EXC●C40Y…C63Y		On additional bars
Control terminal connection				Directly on the drive or on option terminals
Colour of SAREL Spacial 6000 Cell enclosures				RAL 7032 floor-standing enclosure
Environmental characteristics *(1)*				
Maximum ambient pollution Definition of insulation				Degree 2 conforming to IEC/EN 61800-5-1
Vibration resistance				Conforming to standard IEC/EN 60068-2-6 1.5 mm peak to peak from 3 to 10 Hz, 0.6 g from 10 to 200 Hz (3M3 according to IEC/EN 60721-3-3)
Shock resistance				Conforming to standard IEC/EN 60068-2-7 4 g for 11 ms (3M2 according to IEC/EN 60721-3-3)
Ambient air temperature		Operation	**°C**	Incoming air temperature 0…+ 40 (- 10…+ 40 with enclosure heater) Up to + 50°C with derating IEC/EN 60721-3-3 class 3K3
		Storage	**°C**	- 25…+ 70
		Control		Internal temperature monitored by a thermostat which can shut down the equipment
Environmental conditions Use				IEC/EN 60721-3-3 classes 3C2, 3S2 and 3K3, without condensation
Maximum relative humidity				95%
Volume of cooling air		ATV 71EXC●D90N4	**m³/h**	400
		ATV 71EXC●C11N4, C13N4 ATV 71EXC●D90N…C13N ATV 71EXC●C11Y…C16Y	**m³/h**	600
		ATV 71EXC●C16N4	**m³/h**	800
		ATV 71EXC●C20N4…C28N4 ATV 71EXC●C16N…C25N ATV 71EXC●C20Y…C31Y	**m³/h**	1200
		ATV 71EXC●C31N4, C40N4	**m³/h**	1800
		ATV 71EXC●C50N4 ATV 71EXC●C31N…C50N ATV 71EXC●C40Y…C63Y	**m³/h**	2400
Electrical power characteristics *(1)*				
Power Supply		Voltage	**V**	380 V – 15% …415 V +10% for ATV 71EXC●●●●N4 500 V – 15% for ATV 71EXC●●●●N 600…690 V +10% for ATV 71EXC●●●●Y
		Frequency	**Hz**	50/60 Hz ± 5%
Overvoltage class				Class 3 according to EN 50178
Noise level	ATV 71EXC2	D90N4…C16N4 D90N…C13N C11Y…C16Y	**dBA**	64
		C20N4…C40N4 C16N…C25N C20Y…C31Y	**dBA**	66
		C50N4 C31N…C50N C40Y…C63Y	**dBA**	69
	ATV 71EXC5	D90N4…C16N4 D90N…C13N C11Y…C16Y	**dBA**	65
		C20N4…C28N4 C16N…C25N C20Y…C31Y	**dBA**	68
		C31N4, C40N4	**dBA**	78
		C50N4 C31N…C50N C40Y…C63Y	**dBA**	79

(1) Other characteristics, see pages 10 to 17.

Connection characteristics

Three-phase supply voltage 380…415 V 50/60 Hz

Drive terminals		Power Supply	L1/R, L2/S, L3/T			U/T1, V/T2, W/T3				Recommended cross-section for motor cables
		Upstream fuse protection	Maximum wire size on switch		Fast-acting semi-conductor fuse	Maximum wire size on terminals				
						Without motor choke		With motor choke		
			Bar	Terminals		Bar	Terminals	Bar	Terminals	
		A	mm²	mm²	A	mm²	mm²	mm²	mm²	mm²
Cable entry via the bottom	ATV 71EXC●D90N4	250	M10, 2 x 120	–	250	–	2 x 120	–	2 x 120	3 x 95
	ATV 71EXC●C11N4	315	M10, 2 x 120	–	315	–	2 x 120	–	2 x 120	3 x 120
	ATV 71EXC●C13N4	400	M10, 2 x 120	–	400	–	2 x 120	–	2 x 120	3 x 150
	ATV 71EXC●C16N4	400	M10, 2 x 150	–	400	–	2 x 120	–	2 x 120	2 (3 x 95)
	ATV 71EXC●C20N4	500	2 x M12, 4 x 240	–	500	–	2 x 185	–	2 x 185	2 (3 x 120)
	ATV 71EXC●C25N4	630	2 x M12, 4 x 240	–	630	–	4 x 120	–	4 x 120	2 (3 x 150)
	ATV 71EXC●C28N4	800	2 x M12, 4 x 240	–	700	–	4 x 120	–	4 x 120	3 (3 x 150)
	ATV 71EXC●C31N4	800	2 x M12, 4 x 240	–	800	2 x M12, 4 x 240	–	2 x M12, 4 x 240	–	3 (3 x 185)
	ATV 71EXC●C40N4	1000	2 x M12, 4 x 240	–	2 x 500	2 x M12, 4 x 240	–	2 x M12, 4 x 240	–	4 (3 x 185)
	ATV 71EXC●C50N4	1250	3 x M12, 6 x 240	–	2 x 630	3 x M12, 6 x 240	–	3 x M12, 6 x 240	–	5 (3 x 185)
Cable entry via the top	ATV 71EXC●D90N4	250	–	2 x 120	250	–	2 x 120	–	2 x 120	3 x 95
	ATV 71EXC●C11N4	315	–	2 x 120	315	–	2 x 120	–	2 x 120	3 x 120
	ATV 71EXC●C13N4	400	–	2 x 120	400	–	2 x 120	–	2 x 120	3 x 150
	ATV 71EXC●C16N4	400	–	2 x 120	400	–	2 x 120	–	2 x 120	2 (3 x 95)
	ATV 71EXC●C20N4	500	–	2 x 185	500	–	2 x 185	–	2 x 185	2 (3 x 120)
	ATV 71EXC●C25N4	630	–	4 x 120	630	–	4 x 120	–	4 x 120	2 (3 x 150)
	ATV 71EXC●C28N4	800	–	4 x 120	700	–	4 x 120	–	4 x 120	3 (3 x 150)
	ATV 71EXC●C31N4	800	2 x M12, 4 x 240	–	800	2 x M12, 4 x 240	–	2 x M12, 4 x 240	–	3 (3 x 185)
	ATV 71EXC●C40N4	1000	2 x M12, 4 x 240	–	2 x 500	2 x M12, 4 x 240	–	2 x M12, 4 x 240	–	4 (3 x 185)
	ATV 71EXC●C50N4	1250	3 x M12, 6 x 240	–	2 x 630	3 x M12, 6 x 240	–	3 x M12, 6 x 240	–	5 (3 x 185)

Connection characteristics (continued)

Three-phase supply voltage 500 V 50/60 Hz

Drive terminals		Power Supply	L1/R, L2/S, L3/T			U/T1, V/T2, W/T3				Recommended cross-section for motor cables
		Upstream fuse protection	Maximum wire size on switch		Fast-acting semi-conductor fuse	Maximum wire size on terminals				
						Without motor choke		With motor choke		
			Bar	Terminals		Bar	Terminals	Bar	Terminals	
		A	mm²	mm²	A	mm²	mm²	mm²	mm²	mm²
Cable entry via the bottom	ATV 71EXC●D90N	200	M10, 2 x 120	–	200	–	2 x 185	–	2 x 185	3 x 70
	ATV 71EXC●C11N	200	M10, 2 x 120	–	200	–	2 x 185	–	2 x 185	3 x 95
	ATV 71EXC●C13N	250	M10, 2 x 120	–	250	–	2 x 185	–	2 x 185	3 x 120
	ATV 71EXC●C16N	315	2 x M12, 4 x 240	–	315	–	4 x 120	–	4 x 120	3 x 185
	ATV 71EXC●C20N	400	2 x M12, 4 x 240	–	400	–	4 x 120	–	4 x 120	2 (3 x 120)
	ATV 71EXC●C25N	500	2 x M12, 4 x 240	–	500	–	4 x 120	–	4 x 120	2 (3 x 150)
	ATV 71EXC●C31N	630	3 x M12, 6 x 240	–	2 x 315	3 x M12, 6 x 240	–	4 x M12, 6 x 240	–	3 (3 x 150)
	ATV 71EXC●C40N	800	3 x M12, 6 x 240	–	2 x 400	3 x M12, 6 x 240	–	4 x M12, 6 x 240	–	3 (3 x 185)
	ATV 71EXC●C50N	1000	3 x M12, 6 x 240	–	2 x 500	3 x M12, 6 x 240	–	4 x M12, 6 x 240	–	4 (3 x 185)
Cable entry via the top	ATV 71EXC●D90N	200	–	2 x 185	200	–	2 x 185	–	2 x 185	3 x 70
	ATV 71EXC●C11N	200	–	2 x 185	200	–	2 x 185	–	2 x 185	3 x 95
	ATV 71EXC●C13N	250	–	2 x 185	250	–	2 x 185	–	2 x 185	3 x 120
	ATV 71EXC●C16N	315	4 x M12, 6 x 240	–	315	4 x M12, 6 x 240	–	4 x M12, 6 x 240	–	3 x 185
	ATV 71EXC●C20N	400	4 x M12, 6 x 240	–	400	4 x M12, 6 x 240	–	4 x M12, 6 x 240	–	2 (3 x 120)
	ATV 71EXC●C25N	500	4 x M12, 6 x 240	–	500	4 x M12, 6 x 240	–	4 x M12, 6 x 240	–	2 (3 x 150)
	ATV 71EXC●C31N	630	4 x M12, 6 x 240	–	2 x 315	4 x M12, 6 x 240	–	4 x M12, 6 x 240	–	3 (3 x 150)
	ATV 71EXC●C40N	800	4 x M12, 6 x 240	–	2 x 400	4 x M12, 6 x 240	–	4 x M12, 6 x 240	–	3 (3 x 185)
	ATV 71EXC●C50N	1000	4 x M12, 6 x 240	–	2 x 500	4 x M12, 6 x 240	–	4 x M12, 6 x 240	–	4 (3 x 185)

Connection characteristics (continued)

Three-phase supply voltage 600…690 V 50/60 Hz

Drive terminals		Power Supply	L1/R, L2/S, L3/T			U/T1, V/T2, W/T3				Recommended cross-section for motor cables
		Upstream fuse protection	Maximum wire size on switch		Fast-acting semi-conductor fuse	Maximum wire size on terminals				
						Without motor choke		With motor choke		
			Bar	Terminals		Bar	Terminals	Bar	Terminals	
		A	mm²	mm²	A	mm²	mm²	mm²	mm²	mm²
Cable entry via the bottom	ATV 71EXC●C11Y	200	M10, 2 x 120	–	200	–	2 x 185	–	2 x 185	3 x 70
	ATV 71EXC●C13Y	200	M10, 2 x 120	–	200	–	2 x 185	–	2 x 185	3 x 95
	ATV 71EXC●C16Y	250	M10, 2 x 120	–	250	–	2 x 185	–	2 x 185	3 x 120
	ATV 71EXC●C20Y	315	2 x M12, 4 x 240	–	315	–	4 x 120	–	4 x 120	3 x 185
	ATV 71EXC●C25Y	400	2 x M12, 4 x 240	–	400	–	4 x 120	–	4 x 120	2 (3 x 120)
	ATV 71EXC●C31Y	500	2 x M12, 4 x 240	–	500	–	4 x 120	–	4 x 120	2 (3 x 150)
	ATV 71EXC●C40Y	630	3 x M12, 6 x 240	–	2 x 315	3 x M12, 6 x 240	–	4 x M12, 6 x 240	–	3 (3 x 150)
	ATV 71EXC●C50Y	800	3 x M12, 6 x 240	–	2 x 400	3 x M12, 6 x 240	–	4 x M12, 6 x 240	–	3 (3 x 185)
	ATV 71EXC●C63Y	1000	3 x M12, 6 x 240	–	2 x 500	3 x M12, 6 x 240	–	4 x M12, 6 x 240	–	4 (3 x 185)
Cable entry via the top	ATV 71EXC●C11Y	200	–	2 x 185	200	–	2 x 185	–	2 x 185	3 x 70
	ATV 71EXC●C13Y	200	–	2 x 185	200	–	2 x 185	–	2 x 185	3 x 95
	ATV 71EXC●C16Y	250	–	2 x 185	250	–	2 x 185	–	2 x 185	3 x 120
	ATV 71EXC●C20Y	315	4 x M12, 6 x 240	–	315	4 x M12, 6 x 240	–	4 x M12, 6 x 240	–	3 x 185
	ATV 71EXC●C25Y	400	4 x M12, 6 x 240	–	400	4 x M12, 6 x 240	–	4 x M12, 6 x 240	–	2 (3 x 120)
	ATV 71EXC●C31Y	500	4 x M12, 6 x 240	–	500	4 x M12, 6 x 240	–	4 x M12, 6 x 240	–	2 (3 x 150)
	ATV 71EXC●C40Y	630	4 x M12, 6 x 240	–	2 x 315	4 x M12, 6 x 240	–	4 x M12, 6 x 240	–	3 (3 x 150)
	ATV 71EXC●C50Y	800	4 x M12, 6 x 240	–	2 x 400	4 x M12, 6 x 240	–	4 x M12, 6 x 240	–	3 (3 x 185)
	ATV 71EXC●C63Y	1000	4 x M12, 6 x 240	–	2 x 500	4 x M12, 6 x 240	–	4 x M12, 6 x 240	–	4 (3 x 185)

Variable speed drives

Altivar 71

IP 23 or IP 54 floor-standing enclosure compact version

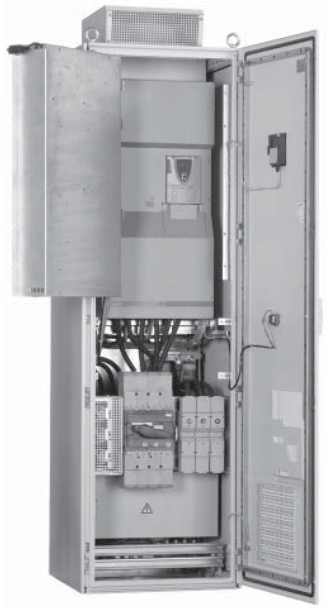

ATV 71EXC2D90N4

Degree of protection	Line supply Max. prospective line Isc (1)	With drive	Reference	Weight
	kA			kg
Three-phase supply voltage 380…415 V 50/60 Hz				
IP 23	100	ATV 71HD90N4D	**ATV 71EXC2D90N4**	315.000
		ATV 71HC11N4D	**ATV 71EXC2C11N4**	315.000
		ATV 71HC13N4D	**ATV 71EXC2C13N4**	335.000
		ATV 71HC16N4D	**ATV 71EXC2C16N4**	350.000
		ATV 71HC20N4D	**ATV 71EXC2C20N4**	385.000
		ATV 71HC25N4D	**ATV 71EXC2C25N4**	485.000
		ATV 71HC28N4D	**ATV 71EXC2C28N4**	485.000
		ATV 71HC31N4D	**ATV 71EXC2C31N4**	640.000
		ATV 71HC40N4D	**ATV 71EXC2C40N4**	680.000
		ATV 71HC50N4D	**ATV 71EXC2C50N4**	805.000
IP 54	100	ATV 71HD90N4D	**ATV 71EXC5D90N4**	325.000
		ATV 71HC11N4D	**ATV 71EXC5C11N4**	325.000
		ATV 71HC13N4D	**ATV 71EXC5C13N4**	345.000
		ATV 71HC16N4D	**ATV 71EXC5C16N4**	360.000
		ATV 71HC20N4D	**ATV 71EXC5C20N4**	390.000
		ATV 71HC25N4D	**ATV 71EXC5C25N4**	485.000
		ATV 71HC28N4D	**ATV 71EXC5C28N4**	485.000
		ATV 71HC31N4D	**ATV 71EXC5C31N4**	660.000
		ATV 71HC40N4D	**ATV 71EXC5C40N4**	700.000
		ATV 71HC50N4D	**ATV 71EXC5C50N4**	835.000
Three-phase supply voltage 500 V 50/60 Hz				
IP 23	100	ATV 71HC11Y	**ATV 71EXC2D90N**	367.000
		ATV 71HC13Y	**ATV 71EXC2C11N**	418.000
		ATV 71HC16Y	**ATV 71EXC2C13N**	418.000
		ATV 71HC20Y	**ATV 71EXC2C16N**	503.000
		ATV 71HC25Y	**ATV 71EXC2C20N**	553.000
		ATV 71HC31Y	**ATV 71EXC2C25N**	553.000
		ATV 71HC40Y	**ATV 71EXC2C31N**	828.000
		ATV 71HC50Y	**ATV 71EXC2C40N**	916.000
		ATV 71HC63Y	**ATV 71EXC2C50N**	916.000
IP 54	100	ATV 71HC11Y	**ATV 71EXC5D90N**	362.000
		ATV 71HC13Y	**ATV 71EXC5C11N**	413.000
		ATV 71HC16Y	**ATV 71EXC5C13N**	413.000
		ATV 71HC20Y	**ATV 71EXC5C16N**	503.000
		ATV 71HC25Y	**ATV 71EXC5C20N**	553.000
		ATV 71HC31Y	**ATV 71EXC5C25N**	553.000
		ATV 71HC40Y	**ATV 71EXC5C31N**	858.000
		ATV 71HC50Y	**ATV 71EXC5C40N**	946.000
		ATV 71HC63Y	**ATV 71EXC5C50N**	946.000

(1) These values are given for use with upstream fuses, see pages 49 to 51.

Variable speed drives

Altivar 71

IP 23 or IP 54 floor-standing enclosure compact version

IP 23 or IP 54 floor-standing enclosure compact version (continued)

Degree of protection	Line supply Max. prospective line Isc (1)	With drive	Reference	Weight
	kA			kg
Three-phase supply voltage 600…690 V 50/60 Hz				
IP 23	100	ATV 71HC11Y	**ATV 71EXC2C11Y**	367.000
		ATV 71HC13Y	**ATV 71EXC2C13Y**	418.000
		ATV 71HC16Y	**ATV 71EXC2C16Y**	418.000
		ATV 71HC20Y	**ATV 71EXC2C20Y**	503.000
		ATV 71HC25Y	**ATV 71EXC2C25Y**	553.000
		ATV 71HC31Y	**ATV 71EXC2C31Y**	553.000
		ATV 71HC40Y	**ATV 71EXC2C40Y**	828.000
		ATV 71HC50Y	**ATV 71EXC2C50Y**	916.000
		ATV 71HC63Y	**ATV 71EXC2C63Y**	916.000
IP 54	100	ATV 71HC11Y	**ATV 71EXC5C11Y**	362.000
		ATV 71HC13Y	**ATV 71EXC5C13Y**	413.000
		ATV 71HC16Y	**ATV 71EXC5C16Y**	413.000
		ATV 71HC20Y	**ATV 71EXC5C20Y**	503.000
		ATV 71HC25Y	**ATV 71EXC5C25Y**	553.000
		ATV 71HC31Y	**ATV 71EXC5C31Y**	553.000
		ATV 71HC40Y	**ATV 71EXC5C40Y**	858.000
		ATV 71HC50Y	**ATV 71EXC5C50Y**	946.000
		ATV 71HC63Y	**ATV 71EXC5C63Y**	946.000

(1) These values are given for use with upstream fuses, see pages 49 to 51.

Variable speed drives

Altivar 71

IP 23 or IP 54 floor-standing enclosure compact version
Common options

Common options without modification of the enclosure (1)

Description	Reference	Weight kg
Adapter for 115 V ∼ logic inputs	**VW3 A3E 101** *(2)*	0.200
Encoder interface cards with RS 422, 5 V compatible differential outputs	**VW3 A3E 401** *(3)*	0.200
Encoder interface cards with RS 422, 15 V compatible differential outputs	**VW3 A3E 402** *(3)*	0.200
Encoder interface card with 12 V open collector outputs	**VW3 A3E 403** *(3)*	0.200
Encoder interface card with 15 V open collector outputs	**VW3 A3E 404** *(3)*	0.200
Encoder interface card with 12 V push-pull outputs	**VW3 A3E 405** *(3)*	0.200
Encoder interface card with 15 V push-pull outputs	**VW3 A3E 406** *(3)*	0.200
Encoder interface card with 24 V push-pull outputs	**VW3 A3E 407** *(3)*	0.200
Resolver encoder interface card 1.25…5.6 V	**VW3 A3E 408** *(3)*	0.200
Universal encoder interface card with SinCos, SinCos Hiperface®, EnDat® or SSI 5, 8 or 12 V output	**VW3 A3E 409** *(3)*	0.200
Encoder interface card with RS 422 compatible differential outputs with encoder emulation (RS 422 ESIM)	**VW3 A3E 411** *(3)*	0.200
Logic I/O extension card	**VW3 A3E 201** *(4)*	0.320
Extended I/O extension card	**VW3 A3E 202** *(4)*	0.300
"Controller Inside" programmable card equipped with a 9-way male SUB-D connector	**VW3 A3E 501** *(5) (6)*	0.300
Modbus TCP communication card	**VW3 A3E 310** *(7)*	0.300
EtherNet/IP communication card	**VW3 A3E 316** *(7)*	0.300
Modbus/Uni-Telway communication card	**VW3 A3E 303** *(7)*	0.300
Standard Fipio communication card	**VW3 A3E 311** *(7)*	0.300
Substitution Fipio communication card	**VW3 A3E 301** *(7)*	0.300
Modbus Plus communication card	**VW3 A3E 302** *(7)*	0.300
PROFIBUS DP communication card	**VW3 A3E 307** *(7)*	0.300
DeviceNet communication card	**VW3 A3E 309** *(7)*	0.300
InterBus communication card	**VW3 A3E 304** *(7)*	0.300
CC-Link communication card	**VW3 A3E 317** *(7)*	0.320

(1) For any other configuration, please consult your Regional Sales Office.
(2) The technical characteristics of the VW3 A3E 101 adapter are identical to those of the VW3 A3 101 adapter, see page 26.
(3) The technical characteristics of the VW3 A3E 401…409 and 411 encoder interface cards are identical to those of the VW3 A3 401…409 and 411 encoder interface cards, see pages 111 to 113.
(4) The technical characteristics of the VW3 A3E 201 and VW3 A3E 202 I/O extension cards are identical to those of the VW3 A3 201 and VW3 A3 202 I/O extension cards, see pages 114 and 115.
(5) The technical characteristics of the VW3 A3E 501 "Controller Inside" programmable card are identical to those of the VW3 A3 501 "Controller Inside" programmable card, see page 118.
(6) If the power consumption table does not exceed 200 mA, the "Controller Inside" programmable card can be powered by Altivar 71 drives. Above 200 mA, the VW3 AE 1401 additional 24 V ⎓ power supply option must be ordered, see page 55.
(7) The technical characteristics of the VW3 A3E 301…304, 307, 309…311, 316 and 317 communication cards are identical to those of the VW3 A3 301…304, 307, 309…311, 316 and 317 communication cards, see pages 126 to 131.

Variable speed drives

Altivar 71

IP 23 or IP 54 floor-standing enclosure compact version

Common options

Common options without modification of the floor-standing enclosure *(1)*

Description	Reference	Weight kg
Remote control terminals X12	**VW3 AE 1201**	0.700
Remote option card terminals X13 For I/O extension cards VW3 A3E 201 and 202	**VW3 AE 1202** *(2)*	0.900
External source terminals 230 V ∿	**VW3 AE 1301**	0.100
Additional 24 V ⎓ power supply, nominal current 2 A *(3)*	**VW3 AE 1401**	2.200
External source terminals 24 V ⎓	**VW3 AE 1402**	0.100
Emergency stop button	**VW3 AE 1501**	0.100
"Preventa type AC" fault relay	**VW3 AE 1502**	0.100
"Preventa type ATE" fault relay	**VW3 AE 1503**	0.100
Enclosure lighting	**VW3 AE 1601**	1.500
Key switch (Local Remote)	**VW3 AE 1801**	0.200
Additional electrical input isolation	**VW3 AE 1901**	0.100
Additional electrical output isolation	**VW3 AE 1902**	0.100
PTC relay	**VW3 AE 2001**	0.100
PTC relay with PTB (ATEX) certification *(4)*	**VW3 AE 2002**	0.100
PT100 relay for motor winding	**VW3 AE 2003**	0.300
PT100 relay for motor bearings	**VW3 AE 2004**	0.300
Motor heater 200 W, 230 V	**VW3 AE 2101**	0.200
Power supply circuit with 400 V protection for 1000 W external fan	**VW3 AE 2102**	0.200
Relay for logic output	**VW3 AE 2201**	0.100
Voltmeter three-phase supply voltage 380…415 V	**VW3 AE 2301**	0.400
Voltmeter three-phase supply voltage 500 V	**VW3 AE 2302**	0.400
Voltmeter three-phase supply voltage 600…690 V	**VW3 AE 2303**	0.400

(1) For any other configuration, please consult your Regional Sales Office.
(2) The X13 terminals, reference VW3 AE 1202, include the X12 terminals, reference VW3 AE 1201.
(3) Mandatory when the power consumption table for the option cards exceeds 200 mA.
(4) ATEX: see pages 220 and 221.

Variable speed drives

Altivar 71

IP 23 or IP 54 floor-standing enclosure compact version
Options dependent on the drive rating

Options dependent on the drive rating (1)

Three-phase supply voltage 380 V…415 V 50/60 Hz

Description	For ATV 71 compact floor-standing enclosure	Reference (2)	Weight kg
Resistance braking unit	EXC●C20N4…C28N4	**VW3 A7E 101** (3)	31.000
	EXC●C31N4…C50N4	**VW3 AE 1003**	190.000
Isolating handle for switch	EXC●D90N4, C11N4	**VW3 AE 0103**	1.000
	EXC●C13N4…C28N4	**VW3 AE 0104**	2.000
	EXC●C31N4…C50N4	**VW3 AE 0105**	2.000
Circuit-breaker	EXC●D90N4, C11N4	**VW3 AE 0106**	1.400
	EXC●C13N4…C20N4	**VW3 AE 0107**	1.400
	EXC●C25N4…C31N4	**VW3 AE 0109**	1.400
	EXC●C40N4	**VW3 AE 0111**	9.400
	EXC●C50N4	**VW3 AE 0112**	9.400
Door handle for circuit-breaker	EXC●D90N4, C11N4	**VW3 AE 0114**	1.000
	EXC●C13N4…C31N4	**VW3 AE 0115**	2.000
	EXC●C40N4, C50N4	**VW3 AE 0116**	2.000
230 V undervoltage coil for circuit-breaker	EXC●D90N4…C31N4	**VW3 AE 0117**	0.500
	EXC●C40N4, C50N4	**VW3 AE 0118**	0.500
110 V undervoltage coil for circuit-breaker	EXC●D90N4…C31N4	**VW3 AE 0119**	0.500
	EXC●C40N4, EXC●C50N4	**VW3 AE 0120**	0.500
230 V motor for circuit-breaker	EXC●D90N4, C11N4	**VW3 AE 0121**	0.950
	EXC●C13N4…C20N4	**VW3 AE 0122**	3.000
	EXC●C25N4…C31N4	**VW3 AE 0123**	3.000
	EXC●C40N4	**VW3 AE 0124**	7.000
	EXC●C50N4	**VW3 AE 0125**	7.000
110 V motor for circuit-breaker	EXC●D90N4, C11N4	**VW3 AE 0127**	0.950
	EXC●C13N4…C20N4	**VW3 AE 0128**	3.000
	EXC●C25N4…C31N4	**VW3 AE 0129**	3.000
	EXC●C40N4	**VW3 AE 0130**	7.000
	EXC●C50N4	**VW3 AE 0131**	7.000
Line contactor	EXC●D90N4, C11N4	**VW3 AE 0206**	7.000
	EXC●C13N4, C16N4	**VW3 AE 0218**	10.000
	EXC●C20N4	**VW3 AE 0209**	12.000
	EXC●C25N4…C31N4	**VW3 AE 0210**	14.000
	EXC●C40N4	**VW3 AE 0212**	24.000
	EXC●C50N4	**VW3 AE 0213**	28.000

(1) For any other configuration, please consult your Regional Sales Office.
(2) The options depend on the rating of the drive and may lead to modification of the size of the enclosure.
(3) The technical characteristics of the VW3 A7E 101 braking units are identical to those of the VW3 A7 101 braking units, see page 134.

Variable speed drives

Altivar 71

IP 23 or IP 54 floor-standing enclosure compact version
Options dependent on the drive rating

Options dependent on the drive rating (continued) (1)

Three-phase supply voltage 380…415 V 50/60 Hz (continued)

Description	For ATV 71 compact floor-standing enclosure	Reference (2)	Weight kg
Control transformer 500 VA ∿, output 230 V ∿	EXC●D90N4…C28N4	**VW3 AE 0302**	8.000
Control transformer 800 VA ∿, output 230 V ∿	EXC●C31N4…C50N4	**VW3 AE 0303**	11.000
Ammeter	EXC●D90N4	**VW3 AE 0405**	0.200
	EXC●C11N4, C13N4	**VW3 AE 0406**	0.200
	EXC●C16N4	**VW3 AE 0407**	0.200
	EXC●C20N4…C28N4	**VW3 AE 0408**	0.200
	EXC●C31N4	**VW3 AE 0409**	0.200
	EXC●C40N4	**VW3 AE 0410**	0.200
	EXC●C50N4	**VW3 AE 0411**	0.200
Enclosure heater	EXC●D90N4…C28N4	**VW3 AE 0501**	0.500
	EXC●C31N4…C50N4	**VW3 AE 0502**	1.000
Motor choke	EXC●D90N4	**VW3 AE 0603**	17.000
	EXC●C11N4, C13N4	**VW3 AE 0604**	35.000
	EXC●C16N4, C20N4	**VW3 AE 0605**	64.000
	EXC●C25N4, C28N4	**VW3 AE 0606**	102.000
	EXC2C31N4	**VW3 AE 0607**	192.000
	EXC5C31N4	**VW3 AE 0611**	192.000
	EXC2C40N4	**VW3 AE 0609**	228.000
	EXC5C40N4	**VW3 AE 0613**	228.000
	EXC2C50N4	**VW3 AE 0610**	234.000
	EXC5C50N4	**VW3 AE 0614**	234.000
Sinus filter *(3)*	EXC2D90N4	**VW3 AE 0641**	318.000
	EXC5D90N4	**VW3 AE 0653**	348.000
	EXC2C11N4	**VW3 AE 0642**	318.000
	EXC5C11N4	**VW3 AE 0654**	325.000
	EXC2C13N4	**VW3 AE 0644**	365.000
	EXC5C13N4	**VW3 AE 0656**	365.000
	EXC2C16N4	**VW3 AE 0645**	373.000
	EXC5C16N4	**VW3 AE 0657**	373.000
	EXC2C20N4	**VW3 AE 0647**	384.000
	EXC5C20N4	**VW3 AE 0659**	394.000
	EXC2C25N4, C28N4	**VW3 AE 0648**	434.000
	EXC5C25N4, C28N4	**VW3 AE 0660**	434.000
	EXC2C31N4	**VW3 AE 0649**	445.000
	EXC5C31N4	**VW3 AE 0661**	445.000
	EXC2C40N4	**VW3 AE 0651**	870.000
	EXC5C40N4	**VW3 AE 0663**	900.000
	EXC2C50N4	**VW3 AE 0652**	900.000
	EXC5C50N4	**VW3 AE 0664**	930.000

(1) For any other configuration, please consult your Regional Sales Office.
(2) The options depend on the rating of the drive and may lead to modification of the size of the enclosure.
(3) Option not compatible with the "Cable entry via the top" option

Variable speed drives

Altivar 71

IP 23 or IP 54 floor-standing enclosure compact version
Options dependent on the drive rating

Options dependent on the drive rating (continued) (1)

Three-phase supply voltage 380…415 V 50/60 Hz (continued)

Description	Use	For ATV 71 compact floor-standing enclosure	Reference (2)	Weight kg
Cable entry via the top (3)	Without motor choke	EXC●D90N4, C11N4	**VW3 AE 0705**	108.000
		EXC●C13N4	**VW3 AE 0706**	108.000
		EXC●C16N4	**VW3 AE 0707**	108.000
		EXC●C20N4…C28N4	**VW3 AE 0708**	126.000
		EXC●C31N4	**VW3 AE 0709**	216.000
		EXC●C40N4	**VW3 AE 0710**	252.000
		EXC●C50N4	**VW3 AE 0711**	252.000
	With motor choke	EXC●C31N4	**VW3 AE 0712**	108.000
		EXC●C40N4	**VW3 AE 0713**	126.000
		EXC●C50N4	**VW3 AE 0714**	126.000
200 mm plinth	With or without motor choke	EXC●D90N4…C16N4	**VW3 AE 0801**	17.000
		EXC●C20N4…C28N4	**VW3 AE 0802**	20.000
	Without motor choke	EXC●C31N4, C40N4	**VW3 AE 0803**	23.000
		EXC●C50N4	**VW3 AE 0804**	24.000
	With motor choke	EXC●C31N4, C40N4	**VW3 AE 0805**	38.000
		EXC●C50N4	**VW3 AE 0806**	39.000
	With braking unit	EXC●C31N4…C50N4	**VW3 AE 0810**	15.000
Plinth for cable entry via the top	With or without motor choke	EXC●D90N4…C28N4	**VW3 AE 0807**	15.000
	Without motor choke	EXC●C31N4…C50N4	**VW3 AE 0808**	30.000
	With motor choke	EXC●C31N4…C50N4	**VW3 AE 0809**	15.000
Plinth for sinus filter	–	EXC●D90N4…C31N4	**VW3 AE 0816**	17.000
		EXC●C40N4, C50N4	**VW3 AE 0817**	20.000

(1) For any other configuration, please consult your Regional Sales Office.
(2) The options depend on the rating of the drive and may lead to modification of the size of the enclosure.
(3) Option not compatible with the "Sinus filter" option.

Variable speed drives

Altivar 71

IP 23 or IP 54 floor-standing enclosure compact version
Options dependent on the drive rating

Options dependent on the drive rating (continued) (1)

Three-phase supply voltage 500 V and 600…690 V 50/60 Hz (continued)

Description	Use	For ATV 71 compact floor-standing enclosure		Reference (2)	Weight
		500 V	600…690 V		kg
Resistance braking unit	–	EXC●C16N…C25N	EXC●C20Y…C31Y	**VW3 AE 1004**	190.000
		EXC●C31N…C50N	EXC●C40Y…C63Y	**VW3 AE 1005**	190.000
Isolating handle for switch	–	EXC●D90N…C13N	EXC●C11Y…C16Y	**VW3 AE 0103**	1.000
		EXC●C16N…C25N	EXC●C20Y…C31Y	**VW3 AE 0104**	2.000
		EXC●C31N…C50N	EXC●C40Y…C63Y	**VW3 AE 0105**	2.000
Ammeter	–	EXC●D90N	EXC●C11Y	**VW3 AE 0404**	0.200
		EXC●C11N, C13N	EXC●C13Y…C20Y	**VW3 AE 0405**	0.200
		EXC●C16N	EXC●C25Y	**VW3 AE 0406**	0.200
		EXC●C20N	EXC●C31Y	**VW3 AE 0407**	0.200
		EXC●C25N, C31N	EXC●C40Y	**VW3 AE 0408**	0.200
		EXC●C40N	EXC●C50Y, C63Y	**VW3 AE 0409**	0.200
		EXC●C50N	–	**VW3 AE 0410**	0.200
Enclosure heater	–	EXC●D90N…C25N	EXC●C11Y…C31Y	**VW3 AE 0501**	0.500
		EXC●C31N…C50N	EXC●C40Y…C63Y	**VW3 AE 0502**	1.000
Motor choke	–	EXC●D90N, C11N	EXC●C11Y, C13Y	**VW3 AE 0603**	17.000
		EXC●C13N, C16N	EXC●C16Y, C20Y	**VW3 AE 0604**	35.000
		EXC●C20N, C25N	EXC●C25Y, C31Y	**VW3 AE 0605**	64.000
		EXC2C31N, C40N	EXC2C40Y, C50Y	**VW3 AE 0626**	192.000
		EXC5C31N, C40N	EXC5C40Y, C50Y	**VW3 AE 0628**	192.000
		EXC2C50N	EXC2C63Y	**VW3 AE 0627**	234.000
		EXC5C50N	EXC5C63Y	**VW3 AE 0629**	234.000
Cable entry via the top	With or without motor choke	EXC●D90N…C13N	EXC●C11Y…C16Y	**VW3 AE 0728**	108.000
		EXC●C16N…C25N	EXC●C20Y…C31Y	**VW3 AE 0729**	126.000
	Without motor choke	EXC●C31N…C50N	EXC●C40Y…C63Y	**VW3 AE 0730**	252.000
	With motor choke	EXC●C31N…C50N	EXC●C40Y…C63Y	**VW3 AE 0731**	126.000
200 mm plinth	With or without motor choke	EXC●D90N…C13N	EXC●C11Y…C16Y	**VW3 AE 0801**	17.000
		EXC●C16N…C25N	EXC●C20Y…C31Y	**VW3 AE 0802**	20.000
		EXC●C31N…C50N	EXC●C40Y…C63Y	**VW3 AE 0804**	24.000
	With motor choke	EXC●C31N…C50N	EXC●C40Y…C63Y	**VW3 AE 0806**	39.000
	With braking unit	EXC●C16N…C50N	EXC●C20Y…C63Y	**VW3 AE 0810**	39.000
Plinth for cable entry via the top	With or without motor choke	EXC●D90N…C25N	EXC●C11Y…C31Y	**VW3 AE 0807**	15.000
	Without motor choke	EXC●C31N…C50N	EXC●C40Y…C63Y	**VW3 AE 0808**	30.000
	With motor choke	EXC●C31N…C50N	EXC●C40Y…C63Y	**VW3 AE 0809**	15.000

(1) For any other configuration, please consult your Regional Sales Office.
(2) The options depend on the rating of the drive and may lead to modification of the size of the enclosure.

Variable speed drives

Altivar 71

IP 23 floor-standing enclosure compact version

IP 23 floor-standing enclosure compact version

ATV 71EXC2D90N4…EXC2C28N4, ATV 71EXC2D90N…EXC2C25N, ATV 71EXC2C11Y…EXC2C31Y

Common side view

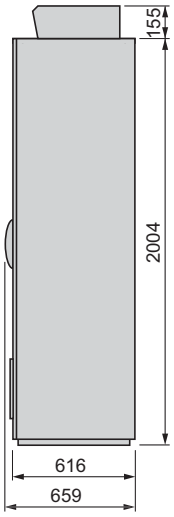

Standard compact floor-standing enclosure

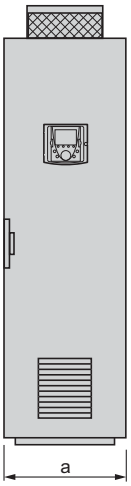

Standard compact floor-standing enclosure + additional floor-standing enclosures, according to the configuration

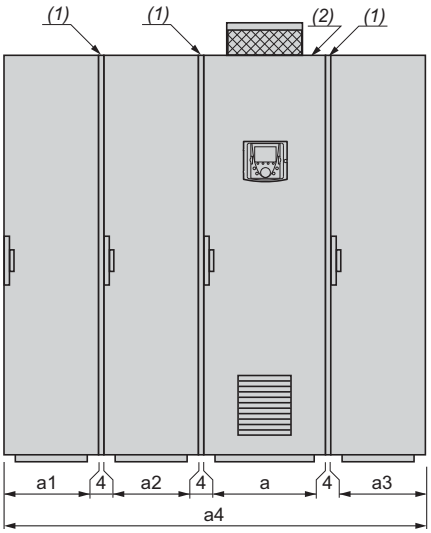

***Note**: The position of the enclosures must be complied with during installation. The number of additional enclosures can vary according to the chosen configuration.*

ATV 71 floor-standing enclosures	Options	a	a1	a2	a3	a4
EXC2D90N4…EXC2C16N4	With or without common options or options *(3)* dependent on the drive rating	616	–	–	–	616
	Cable entry via the top option *(4)*	608	–	408	–	1020
	Sinus filter option	608	–	–	608	1220
EXC2C20N4…EXC2C28N4	With or without common options or options *(6)* dependent on the drive rating	816	–	–	–	816
	Cable entry via the top option *(4)*	808	–	408	–	1220
	Sinus filter option	808	–	–	608	1420
EXC2D90N…EXC2C13N, EXC2C11Y…EXC2C16Y	With or without common options or options dependent on the drive rating	616	–	–	–	616
	Cable entry via the top option	608	–	408	–	1020
EXC2C16N…EXC2C25N, EXC2C20Y…EXC2C31Y	With or without common options or options dependent on the drive rating	816	–	–	–	816
	Cable entry via the top option	808	–	408	–	1220
	Braking unit option	808	–	408	–	1220
	Braking unit + cable entry via the top options	808	408	400	–	1624

(1) Seal. For each floor-standing enclosure added, allow a 4 mm space for the seal.
(2) Standard IP 23 compact version floor-standing enclosure.
(3) Except sinus filter option, which requires an additional enclosure. See table above. The sinus filter option is not compatible with the cable entry via the top option.
(4) The cable entry via the top option is not compatible with the sinus filter option.

IP 23 floor-standing enclosure compact version (continued)

ATV 71EXC2C31N4 … EXC2C50N4, ATV 71EXC2C31N … EXC2C50N, ATV 71EXC2C40Y…EXC2C63Y

Common side view

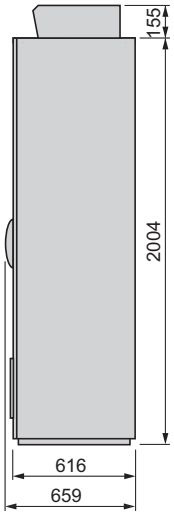

Standard compact floor-standing enclosure

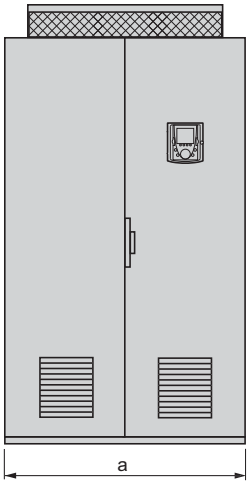

Standard compact floor-standing enclosure + additional floor-standing enclosures, according to the configuration

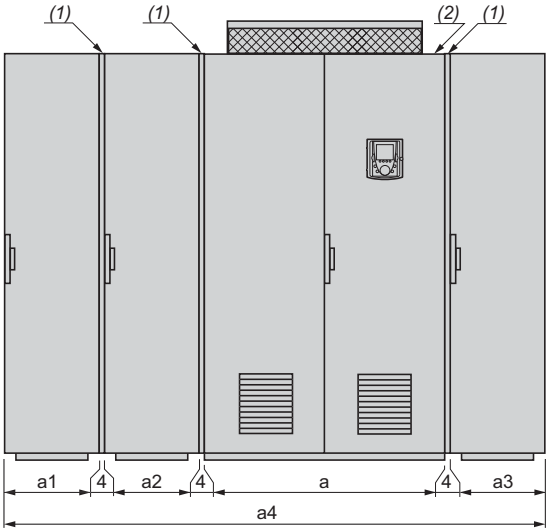

***Note**: The position of the enclosures must be complied with during installation. The number of additional enclosures can vary according to the chosen configuration.*

ATV 71 floor-standing enclosures	Options	a	a1	a2	a3	a4
EXC2C31N4	With or without common options or options *(3)* dependent on the drive rating	1016	–	–	–	1016
	Cable entry via the top option *(4)*	1000	–	408	408	1824
	Braking unit option only and/or options *(3)* dependent on rating	1008	–	408	–	1420
	Braking unit + cable entry via the top options *(4)*	1000	408	400	408	2228
	Motor choke option	1008	–	–	408	1420
	Sinus filter option	1008	–	–	608	1620
EXC2C40N4	With or without common options or options *(3)* dependent on the drive rating	1016	–	–	–	1016
	Cable entry via the top option *(4)*	1000	–	408	408	1824
	Braking unit option only and/or options *(3)* dependent on rating	1008	–	408	–	1420
	Braking unit + cable entry via the top options *(4)*	1000	408	400	408	2228
	Motor choke option	1008	–	–	408	1420
	Sinus filter option	1008	–	–	808	1820
EXC2C50N4	With or without common options or options *(3)* dependent on the drive rating	1216	–	–	–	1216
	Cable entry via the top option *(4)*	1200	–	408	408	2024
	Braking unit option only and/or options *(3)* dependent on rating	1208	–	408	–	1620
	Braking unit + cable entry via the top options *(4)*	1200	408	400	408	2428
	Motor choke option	1208	–	–	408	1620
	Sinus filter option	1208	–	–	808	2020
EXC2C31N…EXC2C50N, EXC2C40Y…EXC2C63Y	With or without common options or options dependent on the drive rating	1216	–	–	–	1216
	Cable entry via the top option	1200	–	408	408	2024
	Braking unit option only and/or options dependent on rating	1208	–	408	–	1620
	Braking unit + cable entry via the top options	1200	408	400	408	2428
	Motor choke option	1208	–	–	408	1620

(1) Seal. For each floor-standing enclosure added, allow a 4 mm space for the seal.
(2) Standard IP 23 compact version floor-standing enclosure.
(3) Except sinus filter option, which requires an additional enclosure. See table above. The sinus filter option is not compatible with the cable entry via the top option.
(4) The cable entry via the top option is not compatible with the sinus filter option

IP 54 floor-standing enclosure compact version

ATV 71EXC5D90N4…EXC5C28N4, ATV 71EXC5D90N…EXC5C25N, ATV 71EXC5C11Y…EXC5C31Y

Common side view

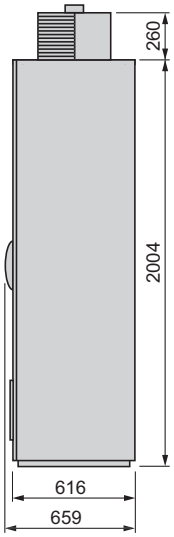

Standard compact floor-standing enclosure

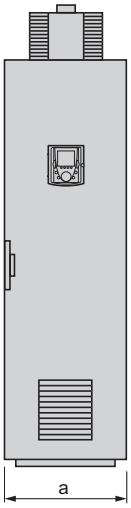

Standard compact floor-standing enclosure + additional floor-standing enclosures, according to the configuration

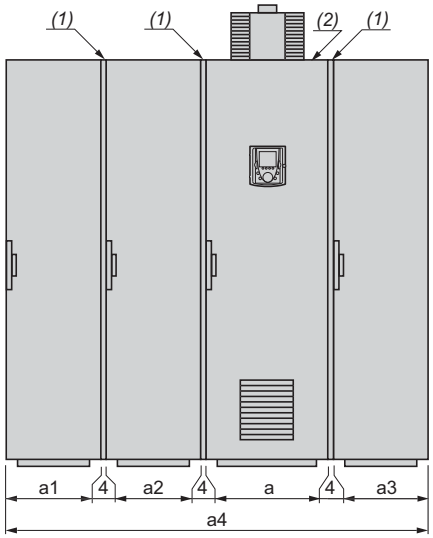

***Note**: The position of the enclosures must be complied with during installation. The number of additional enclosures can vary according to the chosen configuration.*

ATV 71 floor-standing enclosures	Options	a	a1	a2	a3	a4
EXC5D90N4…EXC5C16N4	With or without common options or options *(3)* dependent on the drive rating	616	–	–	–	616
	Cable entry via the top option *(4)*	608	–	408	–	1020
	Sinus filter option	608	–	–	608	1220
EXC5C20N4…EXC5C28N4	With or without common options or options *(3)* dependent on the drive rating	816	–	–	–	816
	Cable entry via the top option *(4)*	808	–	408	–	1220
	Sinus filter option	808	–	–	608	1420
EXC5D90N…EXC5C13N, EXC5C11Y…EXC5C16Y	With or without common options or options dependent on the drive rating	616	–	–	–	616
	Cable entry via the top option	608	–	408	–	1020
EXC5C16N…EXC5C25N, EXC5C20Y…EXC5C31Y	With or without common options or options dependent on the drive rating	816	–	–	–	816
	Cable entry via the top option	808	–	408	–	1220
	Braking unit option	808	–	408	–	1220
	Braking unit + cable entry via the top options	808	408	400	–	1624

(1) Seal. For each floor-standing enclosure added, allow a 4 mm space for the seal.
(2) Standard IP 54 compact version floor-standing enclosure.
(3) Except sinus filter option, which requires an additional enclosure. See table above. The sinus filter option is not compatible with the cable entry via the top option.
(4) Cable entry via the top is not compatible with the sinus filter option.

IP 54 floor-standing enclosure compact version (continued)

ATV 71EXC5C31N4…EXC5C50N4, ATV 71EXC5C31N…EXC5C50N, ATV 71EXC5C40Y…EXC5C63Y

Common side view

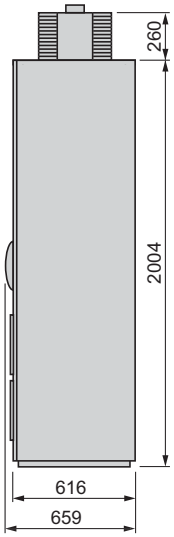

Standard compact floor-standing enclosure

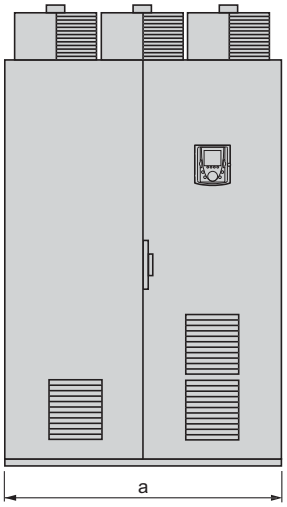

Standard compact floor-standing enclosure + additional floor-standing enclosures, according to the configuration

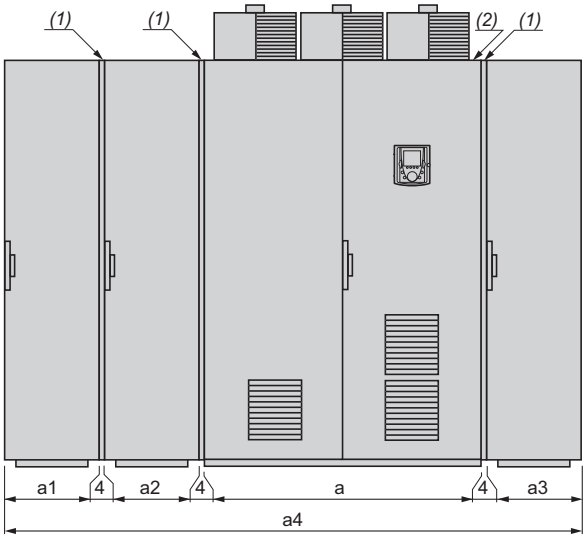

***Note**: The position of the enclosures must be complied with during installation. The number of additional enclosures can vary according to the chosen configuration.*

ATV 71 floor-standing enclosures	Options	a	a1	a2	a3	a4
EXC5C31N4	With or without common options or options *(3)* dependent on the drive rating	1016	–	–	–	1016
	Cable entry via the top option *(4)*	1000	–	408	408	1824
	Braking unit option only and/or options *(3)* dependent on rating	1008	–	408	–	1420
	Braking unit + cable entry via the top options *(4)*	1000	408	400	408	2228
	Motor choke option	1008	–	–	408	1420
	Sinus filter option	1008	–	–	608	1620
EXC5C40N4	With or without common options or options *(3)* dependent on the drive rating	1016	–	–	–	1016
	Cable entry via the top option *(4)*	1000	–	408	408	1824
	Braking unit option only and/or options *(3)* dependent on rating	1008	–	408	–	1420
	Braking unit + cable entry via the top options *(4)*	1000	408	400	408	2228
	Motor choke option	1008	–	–	408	1420
	Sinus filter option	1008	–	–	808	1820
EXC5C50N4	With or without common options or options *(3)* dependent on the drive rating	1216	–	–	–	1216
	Cable entry via the top option *(4)*	1200	–	408	408	2024
	Braking unit option only and/or options *(3)* dependent on rating	1208	–	408	–	1620
	Braking unit + cable entry via the top options *(4)*	1200	408	400	408	2428
	Motor choke option	1208	–	–	408	1620
	Sinus filter option	1208	–	–	808	2020
EXC5C31N…EXC5C50N, EXC5C40Y…EXC5C63Y	With or without common options or options dependent on the drive rating	1216	–	–	–	1216
	Cable entry via the top option	1200	–	408	408	2024
	Braking unit option only and/or options dependent on rating	1208	–	408	–	1620
	Braking unit + cable entry via the top	1200	408	400	408	2428
	Motor choke option	1208	–	–	408	1620

(1) Seal. For each floor-standing enclosure added, allow a 4 mm space for the seal.
(2) Standard IP 54 compact version floor-standing enclosure.
(3) Except sinus filter option, which requires an additional enclosure. See table above. The sinus filter option is not compatible with the cable entry via the top option.
(4) The cable entry via the top option is not compatible with the sinus filter option.

Installation recommendations

The derating curves for the drive nominal current (In) are dependent on the temperature and switching frequency.
For intermediate temperatures, interpolate between 2 curves.

Note: *The drive will reduce the switching frequency automatically in the event of excessive temperature rise.*

Derating curves for ATV 71EXC●D90N4…EXC●C50N4, ATV 71EXC●D90N…EXC●C20N, ATV 71EXC●C11Y…EXC●C25Y *(1)*

ATV 71EXC●D90N4…EXC●C50N4

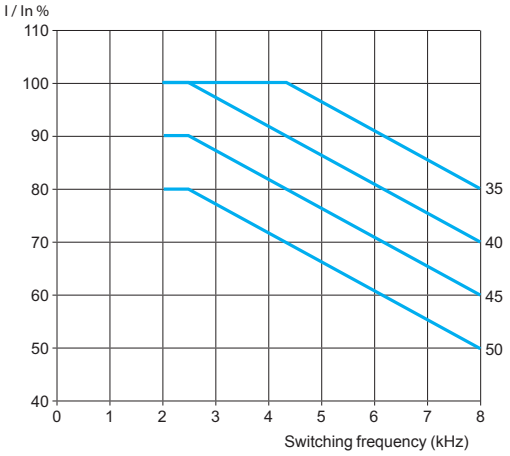

ATV 71EXC●D90N, ATV 71EXC●C11Y

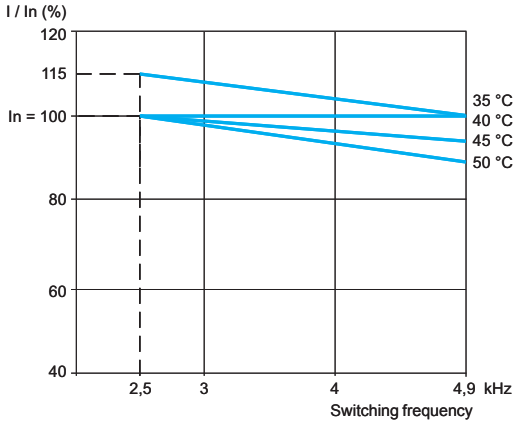

ATV 71EXC●C11N, ATV 71EXC●C13Y

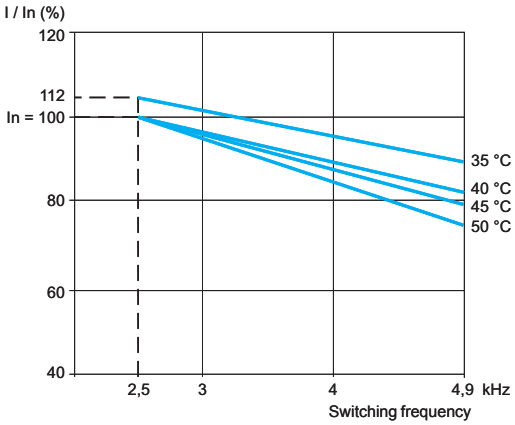

ATV 71EXC●C13N, ATV 71EXC●C16Y

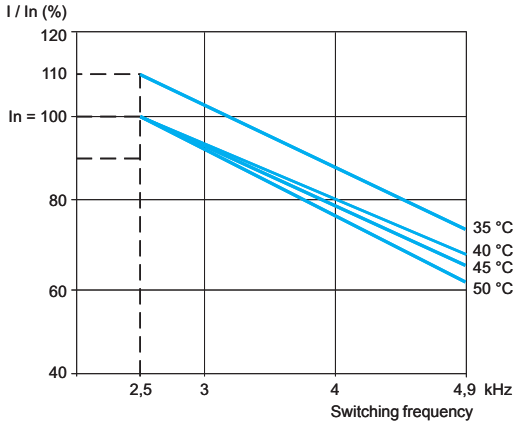

ATV 71EXC●C16N, ATV 71EXC●C20Y

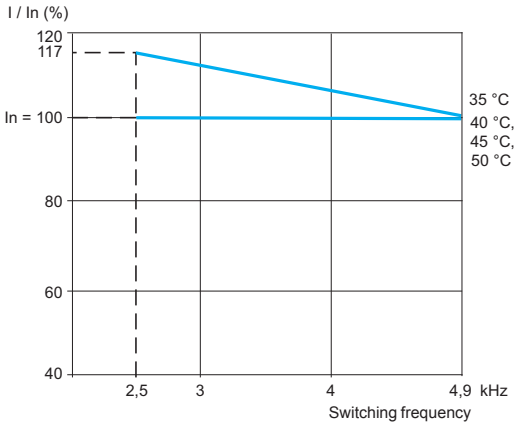

ATV 71EXC●C20N, ATV 71EXC●C25Y

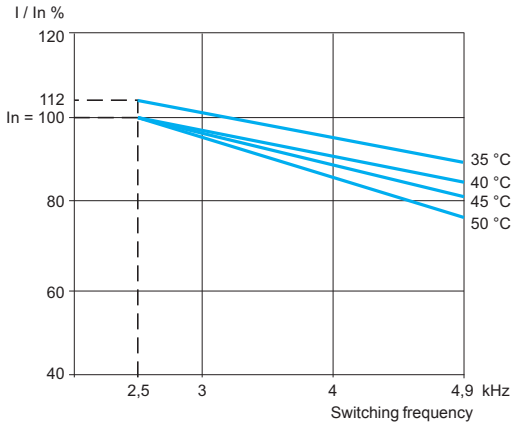

(1) The temperatures shown correspond to the temperature of the air entering the enclosure.

Mounting recommendations (continued)

Derating curves for ATV 71EXC●C25N…EXC●C50N, ATV 71EXC●C31Y…EXC●C63Y *(1)*

ATV 71EXC●C25N, ATV 71EXC●C31Y

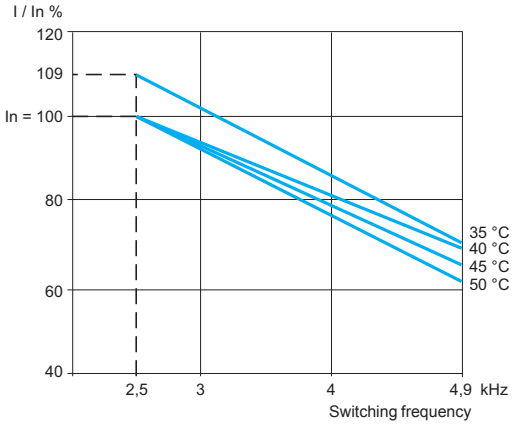

ATV 71EXC●C31N, ATV 71EXC●C40Y

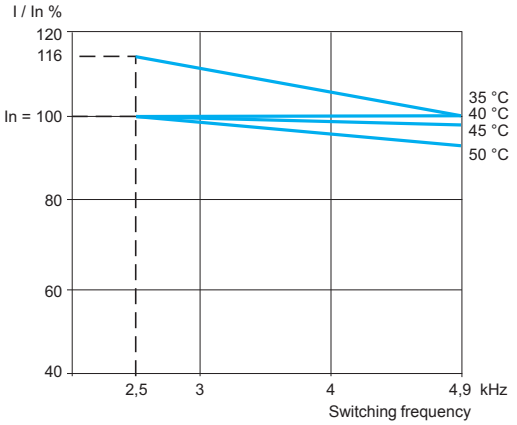

ATV 71EXC●C40N, ATV 71EXC●C50Y

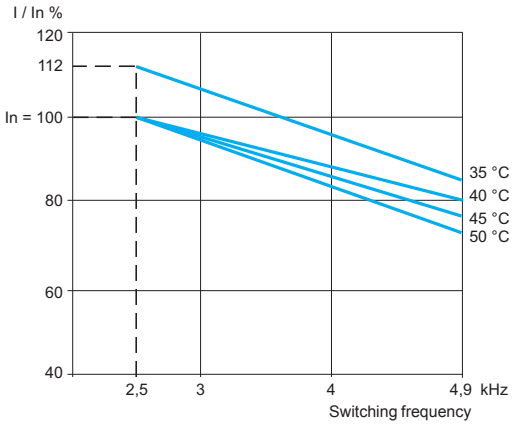

ATV 71EXC●C50N, ATV 71EXC●C63Y

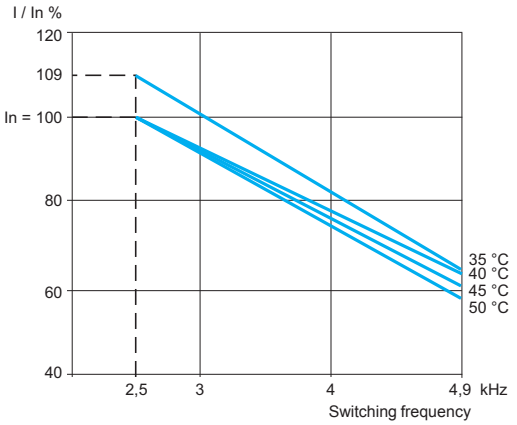

(1) The temperatures shown correspond to the temperature of the air entering the enclosure.

Variable speed drives

Altivar 71

IP 23 or IP 54 floor-standing enclosure compact version

IP 23 or IP 54 floor-standing enclosure compact version

ATV 71EXC●D90N4...EXC●C31N4, ATV 71EXC●D90N...EXC●C31N, ATV 71EXC●C11Y... EXC●C31Y

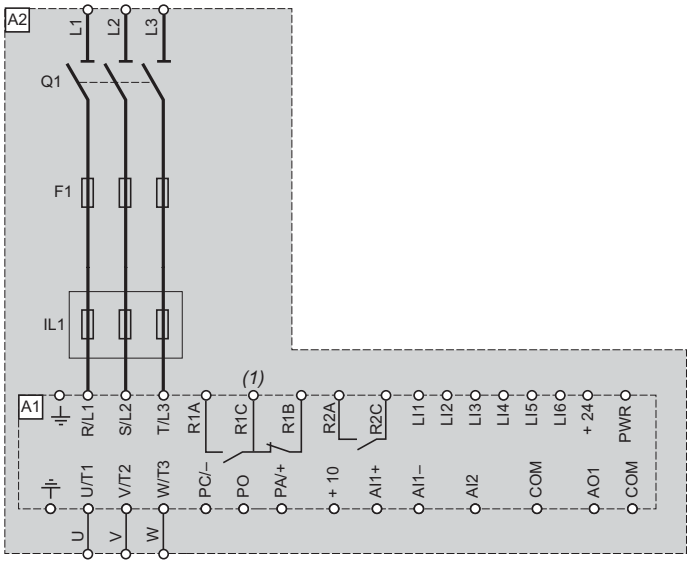

Reference	Description
A1	ATV 71 drive, see pages 23 and 25
A2	ATV 71EXC● compact version floor-standing enclosure, see pages 52 and 53
F1	Fast-acting semi-conductor fuse
IL1	Line choke
Q1	Switch

ATV 71EXC●C40N4, EXC●C50N4, ATV 71EXC●C40N, EXC●C50N, ATV 71EXC●C40Y...EXC●C63Y

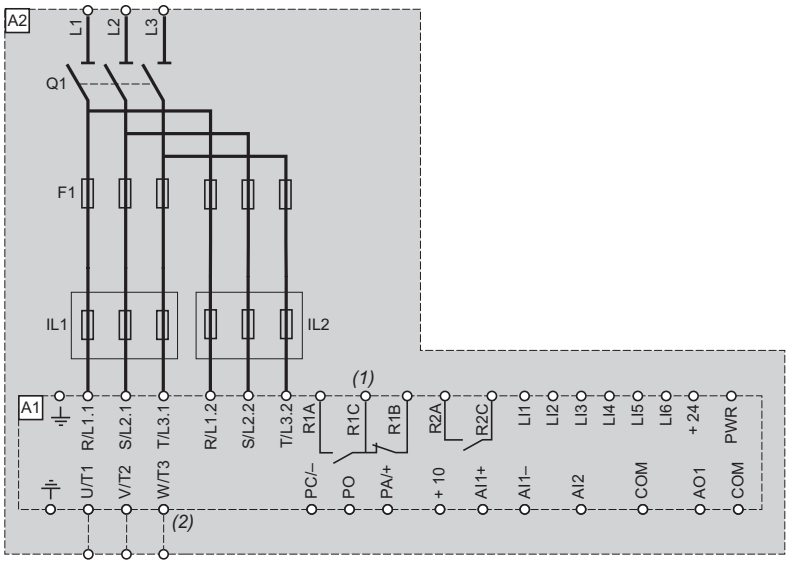

Reference	Description
A1	ATV 71 drive, see pages 23 and 25
A2	ATV 71EXC● compact version floor-standing enclosure, see pages 52 and 53
F1	Fast-acting semi-conductor fuse
IL1, IL2	Line chokes
Q1	Switch

(1) Fault relay contacts. For remote signalling of drive status.
(2) Only for ATV 71 EXC●●●●N and ATV 71 EXC●●●●Y.

Options common to all drives

Remote control terminals X12 - VW3 AE 1201

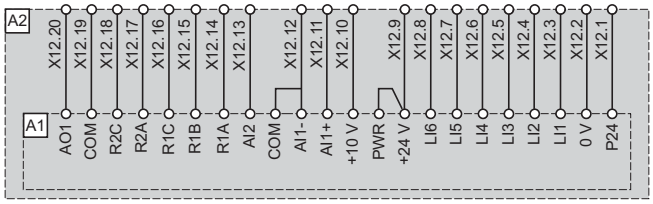

Reference	Description
A1	ATV 71 drive, see pages 23 and 25
A2	ATV 71EXC● compact version floor-standing enclosure, see pages 52 and 53

Remote option card terminals X13 - VW3 AE 1202

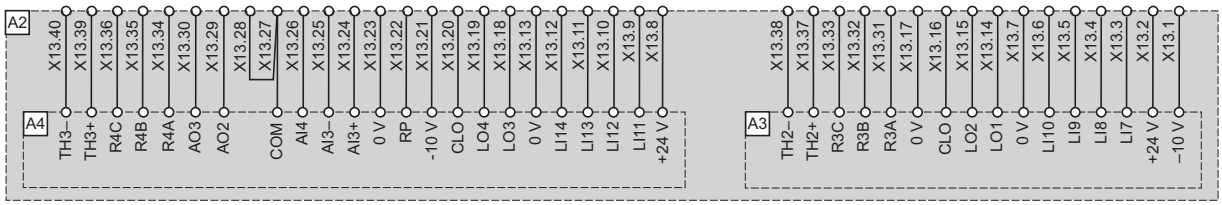

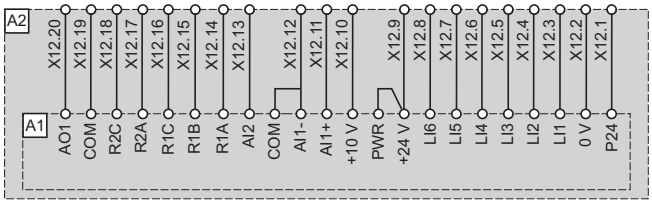

Reference	Description
A1	ATV 71 drive, see pages 23 and 25
A2	ATV 71EXC● compact version floor-standing enclosure, see pages 52 and 53
A3	I/O option card VW3 A3E 201, see page 54
A4	I/O option card VW3 A3E 202, see page 54

Variable speed drives

Altivar 71

IP 23 or IP 54 floor-standing enclosure compact version

Options common to all drives (continued)

External source terminals 230 V ∿ - VW3 AE 1301

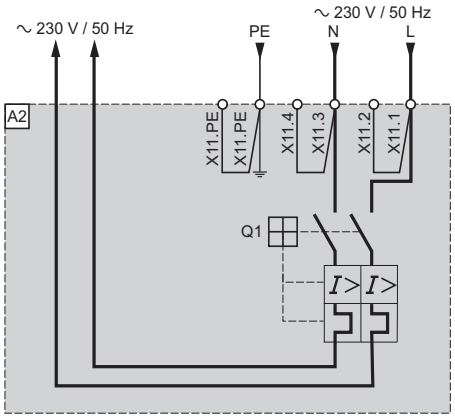

Reference	Description
A2	ATV 71EXC● compact version floor-standing enclosure, see pages 52 and 53
Q1	6 A circuit-breaker
X11	External source terminals 230 V ∿

Additional 24 V ⎓ power supply - VW3 AE 1401

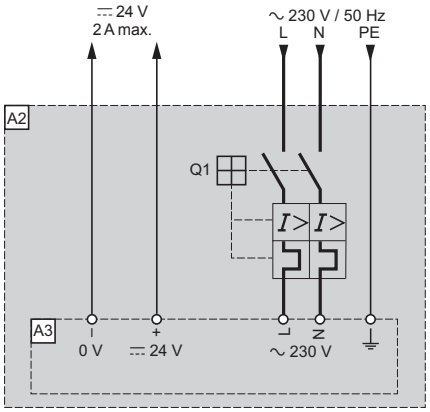

Reference	Description
A2	ATV 71EXC● compact version floor-standing enclosure, see pages 52 and 53
A3	Additional 24 V ⎓ power supply
Q1	2 A circuit-breaker

External source terminals 24 V ⎓ - VW3 AE 1402

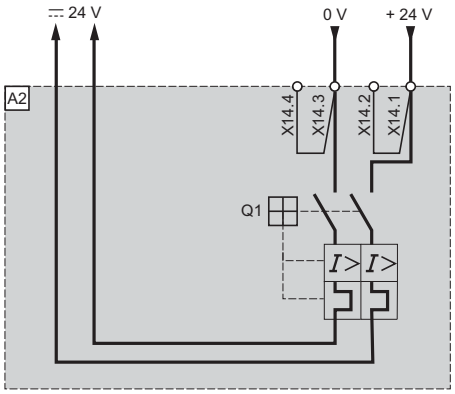

Reference	Description
A2	ATV 71EXC● compact version floor-standing enclosure, see pages 52 and 53
Q1	2 A circuit-breaker
X14	External source terminals 24 V ⎓

Options common to all drives (continued)

Emergency stop button - VW3 AE 1501

Scheme conforming to standards EN 954-1 category 1, IEC/EN 61508 capacity SIL1, stopping category 0 in accordance with IEC/EN 60204-1

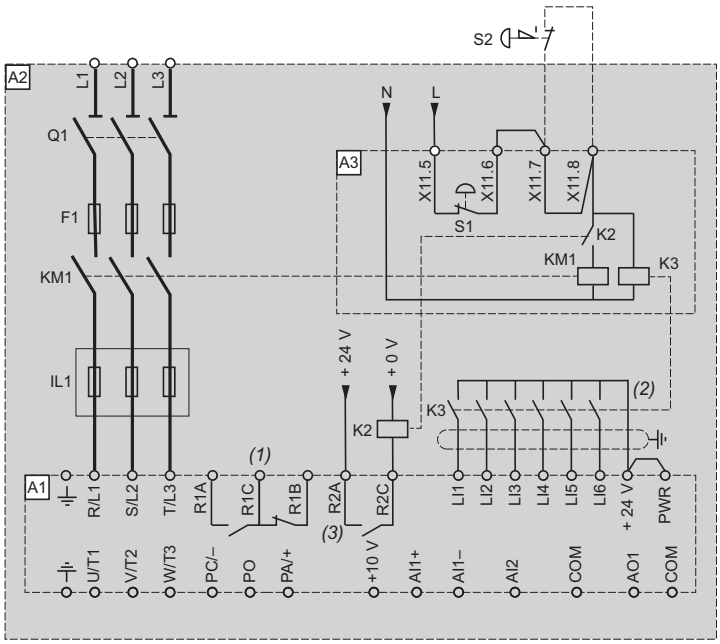

Reference	Description
A1	ATV 71 drives, see pages 23 and 25
A2	ATV 71EXC● compact version floor-standing enclosure, see pages 52 and 53
A3	Emergency stop button
IL1	Line choke
K2	Line contactor control contactor
K3	Logic input control contactor
KM1	Line contactor
Q1	Switch
S1	Emergency stop button mounted on enclosure door
S2	Emergency stop button

(1) Fault relay contacts. For remote signalling of drive status.
(2) Connection of the common for the logic inputs depends on the positioning of the SW1 switch: see schemes on page 227.
(3) Relay logic output R2A must be assigned to the "Line contactor" parameter.

Options common to all drives (continued)

"Preventa type AC" fault relay - VW3 AE 1502

Scheme conforming to standards EN 954-1 category 3, IEC/EN 61508 capacity SIL2, stopping category 0 in accordance with IEC/EN 60204-1

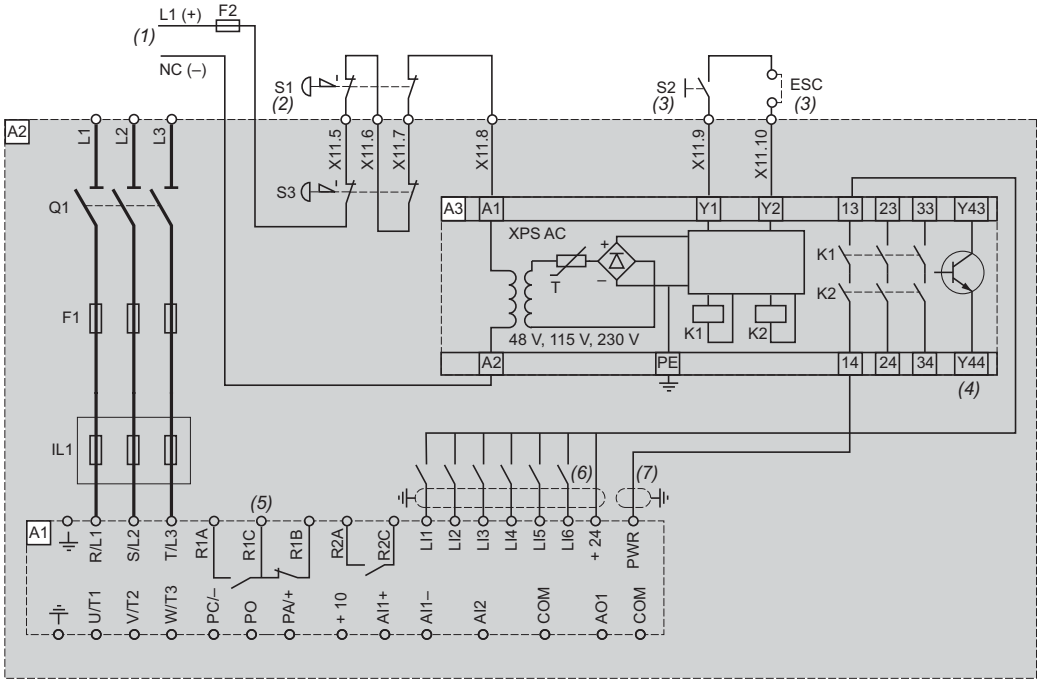

Reference	Description
A1	ATV 71 drive, see pages 23 and 25
A2	ATV 71EXC● compact version floor-standing enclosure, see pages 52 and 53
A3	Preventa XPS AC safety module for monitoring Emergency stops and switches. One safety module can manage the "Power Removal" function for several drives on the same machine. In this case, the PWR terminal on each drive must be connected to the + 24 V via the safety contacts on the XPS AC module. These contacts are independent for each drive.
F1	Fast-acting semi-conductor fuse
F2	Fuse
IL1	Line choke
Q1	Switch
S1	Emergency stop button with 2 contacts
S2	XB4 B or XB5 A pushbutton
S3	Emergency stop button with 2 contacts, mounted on enclosure door

(1) Power supply: 24 V ⎓, 230 V ∿.
(2) Requests freewheel stopping of the movement and activates the "Power Removal" safety function.
(3) S2: resets the XPS AC module on power-up or after an Emergency stop. ESC can be used to set external starting conditions.
(4) The logic output can be used to indicate that the machine is in a safe stop state.
(5) Fault relay contacts. For remote signalling of drive status.
(6) Connection of the common for the logic inputs depends on the positioning of the SW1 switch: see schemes on page 227.
(7) Standardized coaxial cable, type RG174/U according to MIL-C17 or KX3B according to NF C 93-550, external diameter 2.54 mm, maximum length 15 m. The cable shielding must be earthed.

Options common to all drives (continued)

"Preventa type ATE" fault relay - VW3 AE 1503

Scheme conforming to standards EN 954-1 category 3, IEC/EN 61508 capacity SIL 2, stopping category 1 in accordance with IEC/EN 60204-1

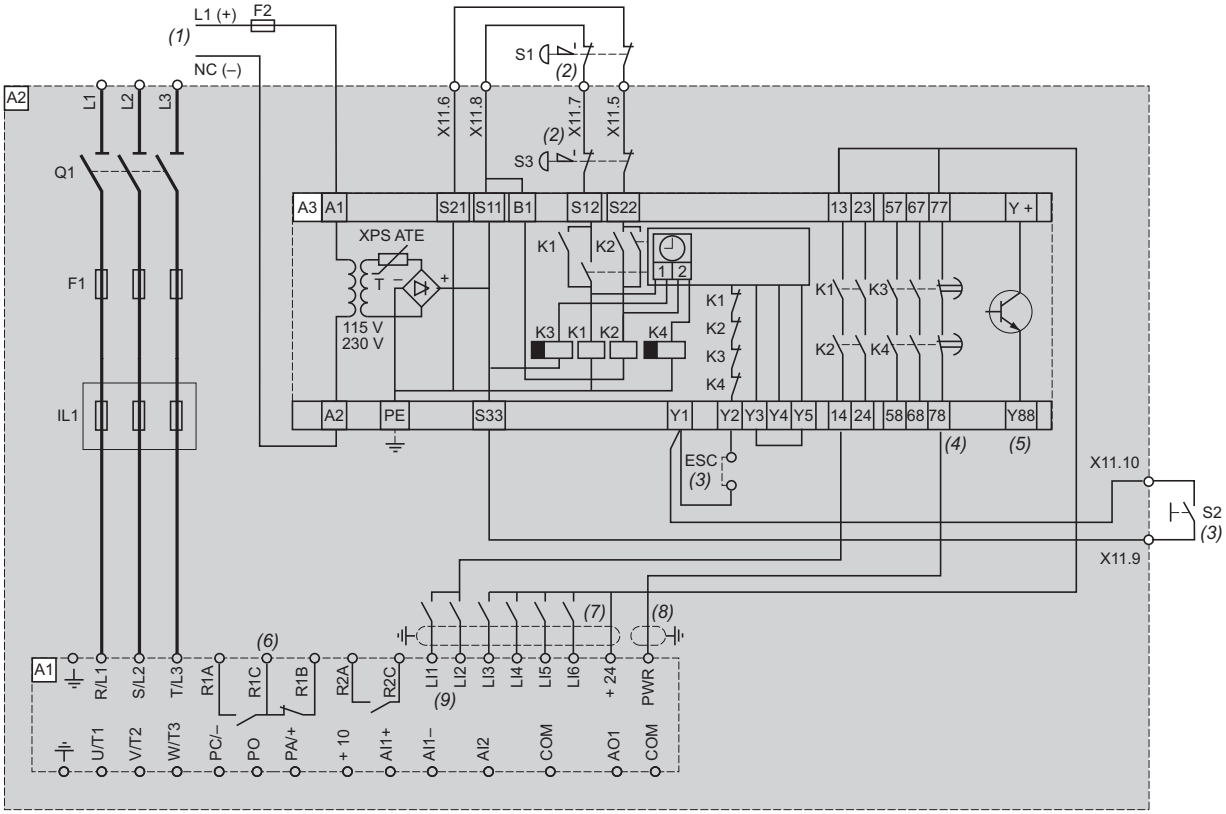

Reference	Description
A1	ATV 71 drive, see pages 23 and 25
A2	ATV 71EXC● compact version floor-standing enclosure, see pages 52 and 53
A3	Preventa XPS ATE safety module for monitoring emergency stops and switches. One safety module can manage the "Power Removal" safety function for several drives on the same machine. In this case the time delay must be adjusted on the drive controlling the motor that requires the longest stopping time. In addition, the PWR terminal on each drive must be connected to the + 24 V via the safety contacts on the XPS ATE module. These contacts are independent for each drive.
F1	Fast-acting semi-conductor fuse
F2	Fuse
IL1	Line choke
Q1	Switch
S1	Emergency stop button with 2 contacts
S2	Run button
S3	Emergency stop button with 2 contacts, mounted on enclosure door

(1) Power supply: 24 V ⎓, 230 V ∿.
(2) Requests controlled stopping of the movement and activates the "Power Removal" safety function.
(3) S2: resets the XPS ATE module on power-up or after an Emergency stop. ESC can be used to set external starting conditions.
(4) For stopping times requiring more than 30 seconds in category 1, use a Preventa XPS AV safety module which can provide a maximum time delay of 300 seconds.
(5) The logic output can be used to indicate that the machine is in a safe state.
(6) Fault relay contacts. For remote signalling of drive status.
(7) Connection of the common for the logic inputs depends on the positioning of the SW1 switch: see schemes on page 227.
(8) Standardized coaxial cable, type RG174/U according to MIL-C17 or KX3B according to NF C 93-550, external diameter 2.54 mm, maximum length 15 m. The cable shielding must be earthed.
(9) Logic inputs LI1 and LI2 must be assigned to the direction of rotation: LI1 to forward direction and LI2 to reverse direction.

Variable speed drives

Altivar 71

IP 23 or IP 54 floor-standing enclosure compact version

Options common to all drives (continued)

Floor-standing enclosure lighting - VW3 AE 1601

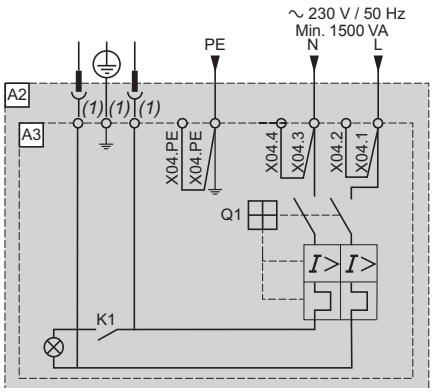

Reference	Description
A2	ATV 71EXC● compact version floor-standing enclosure, see pages 52 and 53
A3	Floor-standing lighting
K1	Door contact
Q1	6 A circuit-breaker

(1) European standard power socket available.

Additional electrical input isolation - VW3 AE 1901

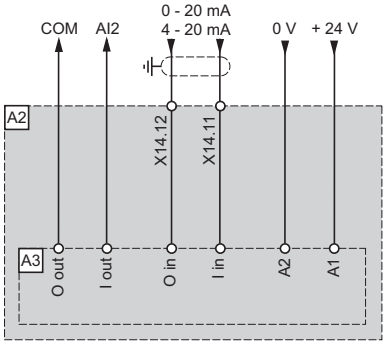

Reference	Description
A2	ATV 71EXC● compact version floor-standing enclosure, see pages 52 and 53
A3	Additional electrical input isolation

Additional electrical output isolation - VW3 AE 1902

AO1 analog output option

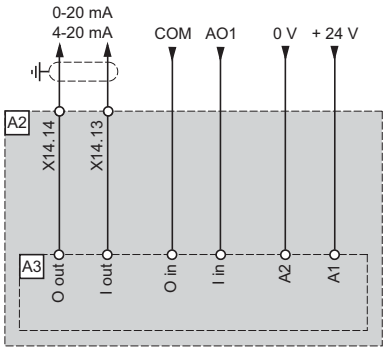

Reference	Description
A2	ATV 71EXC● compact version floor-standing enclosure, see pages 52 and 53
A3	Additional electrical output isolation

AO2 analog output option

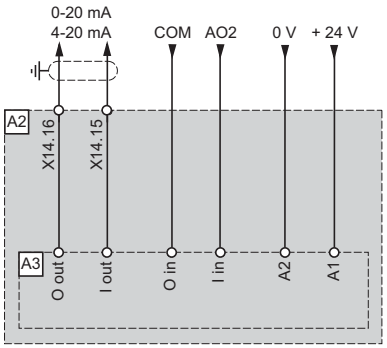

Reference	Description
A2	ATV 71EXC● compact version floor-standing enclosure, see pages 52 and 53
A3	Additional electrical output isolation

AO3 analog output option

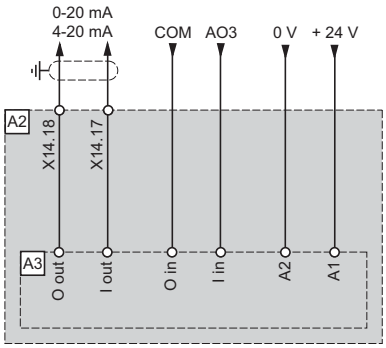

Reference	Description
A2	ATV 71EXC● compact version floor-standing enclosure, see pages 52 and 53
A3	Additional electrical output isolation

Options common to all drives (continued)

PTC relay - VW3 AE 2001

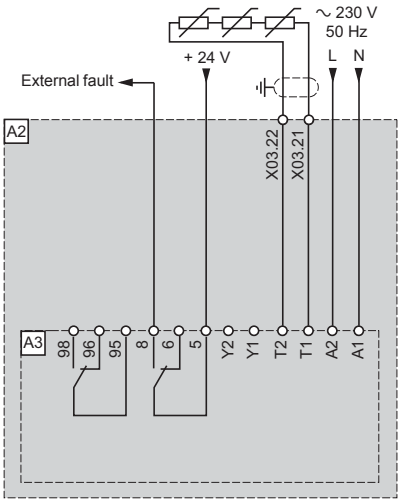

Reference	Description
A2	ATV 71EXC● compact version floor-standing enclosure, see pages 52 and 53
A3	PTC relay

PTC relay with PTB (ATEX) certification (1) - VW3 AE 2002

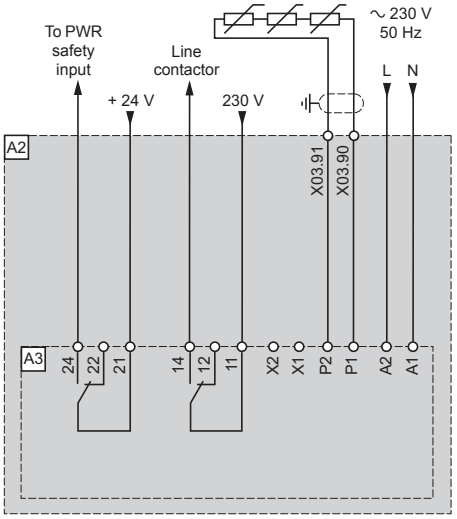

Reference	Description
A2	ATV 71EXC● compact version floor-standing enclosure, see pages 52 and 53
A3	PTC relay with PTB (ATEX) certification

(1) ATEX: see pages 60295/4 and 60295/5.

Relay for PT100 for motor winding - VW3 AE 2003

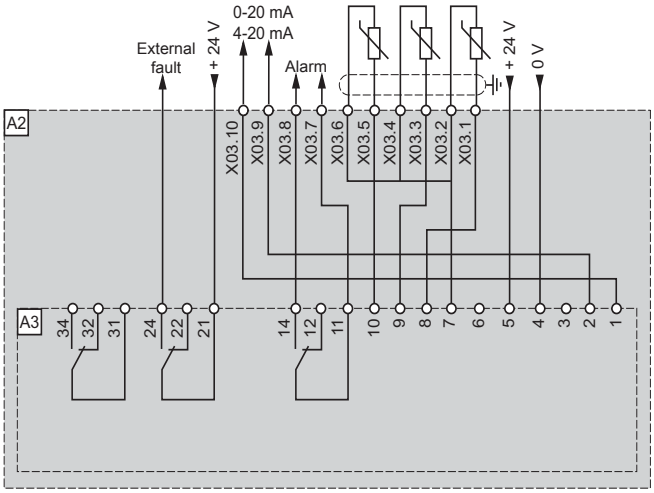

Reference	Description
A2	ATV 71EXC● compact version floor-standing enclosure, see pages 52 and 53
A3	PT100 relay for motor winding

PT100 relay for motor bearings - VW3 AE 2004

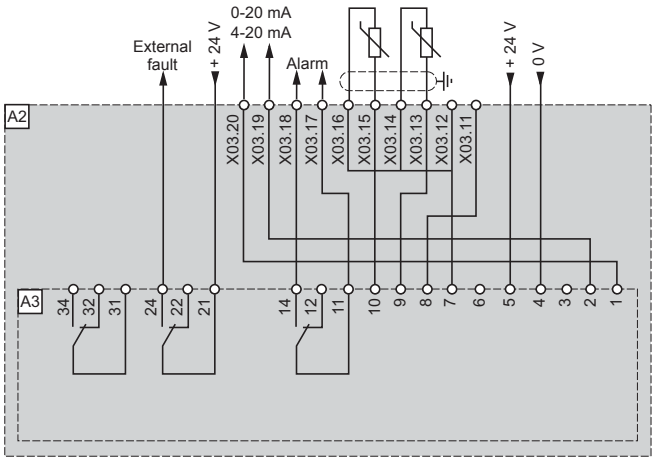

Reference	Description
A2	ATV 71EXC● compact version floor-standing enclosure, see pages 52 and 53
A3	PT100 relay for motor bearings

Options common to all drives (continued)

Motor heater - VW3 AE 2101

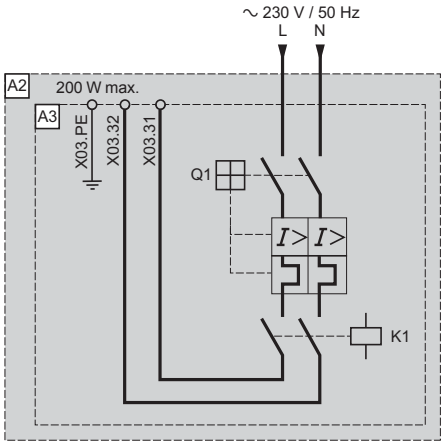

Reference	Description
A2	ATV 71EXC● compact version floor-standing enclosure, see pages 52 and 53
A3	Motor heater
K1	Controlled by the drive or the line contactor. This control is activated if the drive is at "Stop" state
Q1	Circuit-breaker

Power supply circuit with protection for external fan - VW3 AE 2102

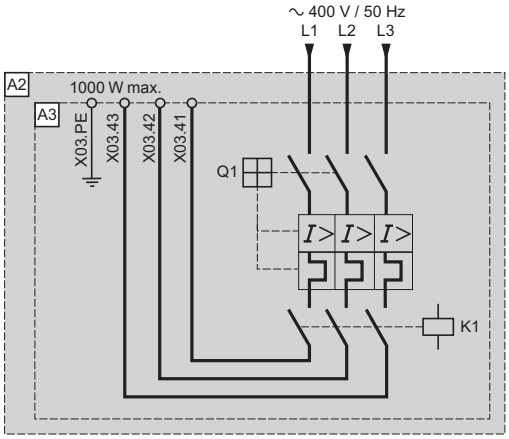

Reference	Description
A2	ATV 71EXC● compact version floor-standing enclosure, see pages 52 and 53
A3	Power supply circuit with protection
K1	Controlled by the drive or the line contactor. This control is activated if the drive is at "RUN" state
Q1	Circuit-breaker

Relay for logic output - VW3 AE 2201

Logic output LO1

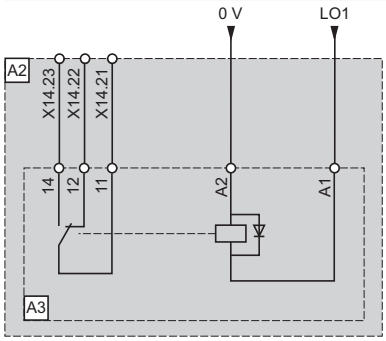

Reference	Description
A2	ATV 71EXC● compact version floor-standing enclosure, see pages 52 and 53
A3	Relay for logic output

Logic output LO2

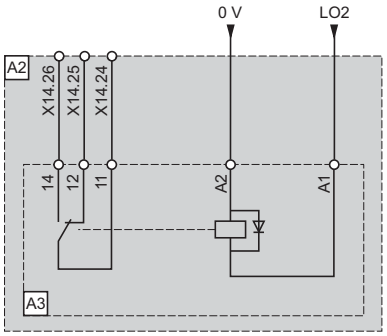

Reference	Description
A2	ATV 71EXC● compact version floor-standing enclosure, see pages 52 and 53
A3	Relay for logic output

Logic output LO3

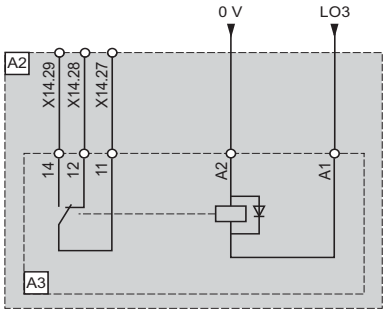

Reference	Description
A2	ATV 71EXC● compact version floor-standing enclosure, see pages 52 and 53
A3	Relay for logic output

Logic output LO4

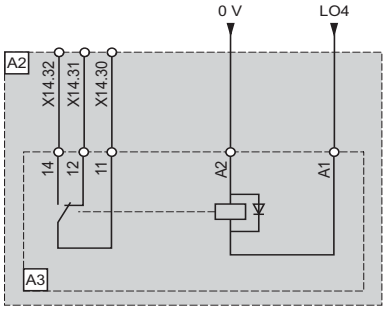

Reference	Description
A2	ATV 71EXC● compact version floor-standing enclosure, see pages 52 and 53
A3	Relay for logic output

Options dependent on drive rating

Braking units - VW3 A7E 101, VW3 AE 1003…1005

ATV 71EXC●C20N4…C50N4, ATV 71EXC●C16N…C50N, ATV 71EXC●C20Y…C63Y

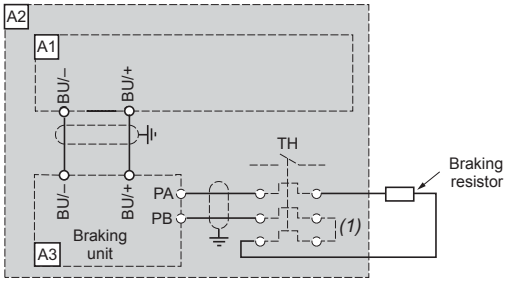

Components for use together	
Reference	**Description**
A1	ATV 71 drive, see pages 23 and 25
A2	ATV 71EXC● compact version floor-standing enclosure, see pages 52 and 53
A3	Braking unit, see pages 56 and 59
Braking resistor	See pages 136 and 137

(1) A thermal overload relay can be added. The contact on this relay must then be integrated in the control circuit.

Control transformers 500 VA or 800 VA ∼ - VW3 AE 0302, VW3 AE 0303

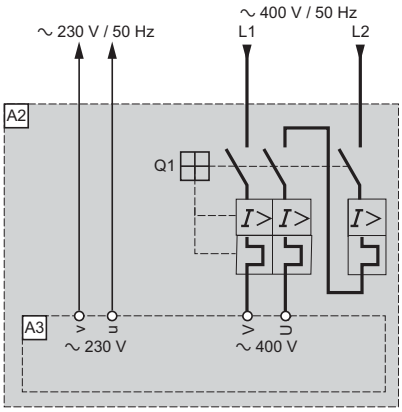

Reference	Description
A2	ATV 71EXC●D90N4…C50N4 compact version floor-standing enclosure, see pages 52 and 53
A3	Control transformer 500 VA ∼ or 800 VA ∼
Q1	Circuit-breaker

Variable speed drives
Altivar 71
UL Type 12/IP 54 drives with Vario

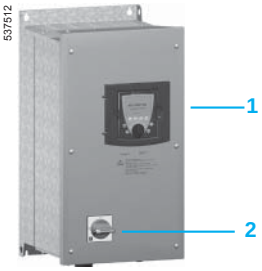

ATV 71E5●●●N4

Presentation

Altivar 71 UL Type 12/IP 54 variable speed drives can be supplied equipped with a Vario switch disconnector.

This ready-assembled offer, ATV 71E5●●●N4, is particularly designed for applications that require an accessible drive as close as possible to the motor (conveyor chain, etc.).

It covers motor power ratings between 0.75 kW and 75 kW, with a three-phase supply voltage of between 380 and 480 V.

Description

The **ATV 71E5●●●N4** ready-assembled Altivar 71 offer consists of:
- An **ATV 71W●●●N4** drive 1
- A Vario switch disconnector 2

One or two (maximum) control units (pushbutton, switch, etc.) and/or signalling units (LED) can be added on the front of the drive *(1) (2)*.

Note: *For the connection diagrams, see pages 218 to 241, and for the mounting and installation recommendations, see pages 264 and 265.*

Options

The following options, available for ATV 71W●●●N4 drives, can be used at the same rating, with the ATV 71E5●●●N4 offer:
- Adapter for 115 V ∼ logic inputs
- Ready-assembled IP 54 baseplate
- Option cards: encoder interface, I/O extension, programmable “Controller Inside” and communication
- Braking or hoisting resistors
- Network braking units
- DC chokes, line chokes and passive filters
- Additional EMC input filters
- Motor chokes and sinus filters
- PowerSuite software workshop

See the tables summarizing the possible combinations for Altivar 71 UL Type 12/IP 54 drives to determine the options available for each drive (see pages 180, 181, 186 and 187).

Note: *UL Type 1, IP 21 or IP 31 conformity kits are not necessary for this range.*

(1) The customer is responsible for drilling the front panel and mounting the control or signalling units, see page 79.
(2) Please refer to the “Control and signalling components” catalogue

Variable speed drives

Altivar 71

UL Type 12/IP 54 drives with Vario

Connection characteristics (terminals for the power supply, the motor, the DC bus and the braking resistor) *(1)*

Drive terminals		L1/R, L2/S, L3/T	U/T1, V/T2, W/T3, PC/-, PO, PA/+, PA, PB
Maximum wire size and tightening torque	ATV 71E5075N4…E5U40N4	10 mm², AWG 6 2.1 Nm, 18.3 lb.in	4 mm², AWG 10 1.4 Nm, 12.3 lb.in
	ATV 71E5U55N4, E5U75N4	25 mm², AWG 2 5.6 Nm, 50 lb.in	6 mm², AWG 8 3 Nm, 26.5 lb.in
	ATV 71E5D11N4	25 mm², AWG 2 5.6 Nm, 50 lb.in	16 mm², AWG 4 3 Nm, 26.5 lb.in
	ATV 71E5D15N4, E5D18N4	25 mm², AWG 2 5.6 Nm, 50 lb.in	35 mm², AWG 2 5.4 Nm, 47.7 lb.in
	ATV 71E5D22N4	25 mm², AWG 2 5.6 Nm, 50 lb.in	50 mm², AWG 1/0 12 Nm , 102.2 lb.in
	ATV 71E5D30N4…E5D37N4	95 mm², AWG 4/0 22.6 Nm, 200 lb.in	50 mm², AWG 1/0 12 Nm , 102.2 lb.in
	ATV 71E5D45N4…E5D75N4	95 mm², AWG 4/0 22.6 Nm, 200 lb.in	150 mm², 300 MCM 41 Nm, 360 lb.in

(1) Other characteristics identical to those of ATV 71W●●●N4 drives at the same rating, see pages 10 to 17.

Variable speed drives

Altivar 71

UL Type 12/IP 54 drives with Vario

537512

ATV 71E5D11N4

UL Type 12/IP 54 drives with Vario and integrated class A EMC filter

Three-phase supply voltage: 380…480 V 50/60 Hz

Motor		Line supply				Altivar 71					
Power indicated on plate *(1)*		Max. line current *(2)*		Apparent power	Max. prospective line Isc	Max. continuous current In *(1)*		Max. transient current for		Reference *(3)*	Weight
		380 V	480 V	380 V		380 V	460 V	60 s	2 s		
kW	*HP*	A	A	kVA	kA	A	A	A	A		kg
0.75	*1*	3.7	3	2.4	5	2.3	2.1	3.5	3.8	**ATV 71E5075N4**	12.400
1.5	*2*	5.8	5.3	3.8	5	4.1	3.4	6.2	6.8	**ATV 71E5U15N4**	12.400
2.2	*3*	8.2	7.1	5.4	5	5.8	4.8	8.7	9.6	**ATV 71E5U22N4**	12.400
3	–	10.7	9	7	5	7.8	6.2	11.7	12.9	**ATV 71E5U30N4**	13.400
4	*5*	14.1	11.5	9.3	5	10.5	7.6	15.8	17.3	**ATV 71E5U40N4**	13.400
5.5	*7.5*	20.3	17	13.4	22	14.3	11	21.5	23.6	**ATV 71E5U55N4**	16.400
7.5	*10*	27	22.2	17.8	22	17.6	14	26.4	29	**ATV 71E5U75N4**	16.400
11	*15*	36.6	30	24.1	22	27.7	21	41.6	45.7	**ATV 71E5D11N4**	18.700
15	*20*	48	39	31.6	22	33	27	49.5	54.5	**ATV 71E5D15N4**	29.400
18.5	*25*	45.5	37.5	29.9	22	41	34	61.5	67.7	**ATV 71E5D18N4**	29.400
22	*30*	50	42	32.9	22	48	40	72	79.2	**ATV 71E5D22N4**	33.700
30	*40*	66	56	43.4	22	66	52	99	109	**ATV 71E5D30N4**	44.800
37	*50*	84	69	55.3	22	79	65	118.5	130	**ATV 71E5D37N4**	44.800
45	*60*	104	85	68.5	22	94	77	141	155	**ATV 71E5D45N4**	67.400
55	*75*	120	101	79	22	116	96	174	191	**ATV 71E5D55N4**	67.400
75	*100*	167	137	109.9	22	160	124	240	264	**ATV 71E5D75N4**	67.400

(1) These values are given for a nominal switching frequency of 4 kHz up to ATV 71E5D30N4, or 2.5 kHz for ATV 71E5D37N4…E5D75N4 used in continuous operation.
The switching frequency is adjustable from 1…16 kHz for all ratings.
Above 2.5 or 4 kHz, depending on the rating, the drive will reduce the switching frequency automatically in the event of excessive temperature rise. For continuous operation above the nominal switching frequency, derate the nominal drive current (see derating curves on page 265).
(2) Typical value for the indicated motor power and for the maximum prospective line Isc.
(3) All drives are supplied with a plate for EMC mounting.

Variable speed drives

Altivar 71

UL Type 12/IP 54 drives with Vario

ATV 71E5075N4…E5D75N4 variable speed drives

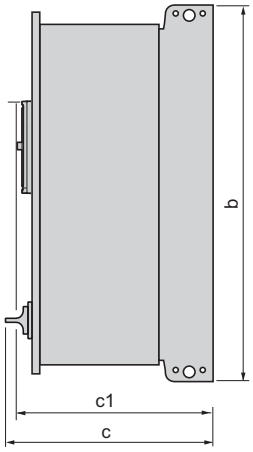

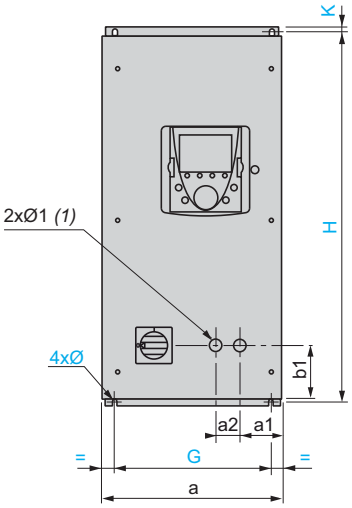

ATV 71E5	a	a1	a2	b	b1	c	c1	G	H	K	Ø	Ø1
075N4…U22N4	240	60.5	30	490	80	296	272	200	476	6	6	22.3
U30N4, U40N4	240	60.5	30	490	80	310	286	200	476	6	6	22.3
U55N4, U75N4	260	60.5	30	525	80	310	286	220	511	6	6	22.3
D11N4	295	77	30	560	80	339	315	250	544	8	6	22.3
D15N4, D18N4	315	77	30	665	81	340	315	270	647	10	6	22.3
D22N4	285	73	30	720	119	335	315	245	700	10	7	22.3
D30N4, D37N4	285	69	30	880	218	383	343	245	860	10	7	22.3
D45N4…D75N4	362	102	30	1000	280	404	364	300	975	10	9	22.3

(1) The diameters and positions of the drill holes for mounting control and/or signalling units must be complied with.The customer is responsible for drilling and mounting units.

Variable speed drives

Altivar 71

IP 54 floor-standing enclosure with separate air flows

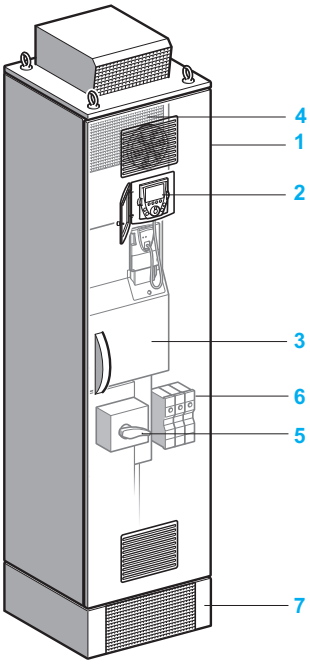

Presentation

Altivar 71 variable speed drives can be supplied ready-assembled in an IP 54 floor-standing enclosure to facilitate installation and setup and, in particular, to ensure optimum ventilation of the enclosure.
The ATV 71EXS5●●●●● offer consists of a floor-standing enclosure providing IP 54 protection with separate cooling circuits, for harsh and highly polluted environments.
The enclosure is supplied ready to connect.

The ATV 71EXS5●●●●● offer covers motor power ratings from 90 kW to 630 kW with three types of power supply:
- 380…415 V three-phase, 90 kW to 500 kW (**ATV 71EXS5●●●N4**)
- 500 V three-phase, 90 kW to 500 kW (**ATV 71EXS5●●●N**)
- 600…690 V three-phase, 110 kW to 630 kW (**ATV 71EXS5●●●Y**)

The ATV 71EXS5●●●●● offer includes the choice of:
- A standard separate air flow offer
- A modular offer in which a wide selection of options can be incorporated according to the rating of the drive.

Standard separate air flow offer

It consists of:
- A wired, ready-assembled Sarel “Spacial 6000” enclosure 1
- A drive on heatsink, ATV 71HD90N4…HC50N4 or ATV 71HC11Y…ATV 71HC63Y 3
- An IP 65 remote mounting kit for graphic display terminal 2
- A DC choke 4 (ATV 71EXS5●●●N4) or a line choke in an additional enclosure (ATV 71EXS5●●●N, ATV 71EXS5●●●Y)
- A switch and fast-acting semi-conductor fuses 5
- Motor terminals 6
- A plinth 7

See page 86.

Modular offer

It consists of:
- The standard separate air flow offer
- One or more options (see pages 87 to 93)

As well as these specific options, all the options available for Altivar 71 drives can be used at the same rating with the enclosed drives offer (see pages 178, 179 and 184 to 187).
For any configurations other than those shown on pages 87 to 93, please consult your Regional Sales Office.

Common options (modular offer only)

- Adapter for 115 V ∿ logic inputs
- Encoder interface cards
- I/O extension cards
- "Controller Inside" programmable card
- Modbus TCP, Fipio, Modbus/Uni-Telway, Modbus Plus, EtherNet/IP, DeviceNet, PROFIBUS DP, InterBus and CC-Link communication cards
- PT100 relays
- Motor heater
- Additional 24 V ⎓ power supply
- Emergency stop button
- Enclosure lighting
- Key switch (Local Remote)
- Power supply circuit for external fan

See pages 87 and 88.

Options dependent on the drive rating (modular offer only)

- Braking unit
- Isolating handle for switch
- Circuit-breaker
- Line contactor
- Control transformer
- Ammeter
- Enclosure heater
- Motor choke
- Sinus filter
- Cable entry via the top
- Air conditioning

See pages 89 to 93.

Variable speed drives

Altivar 71

IP 54 floor-standing enclosure with separate air flows

Ventilation

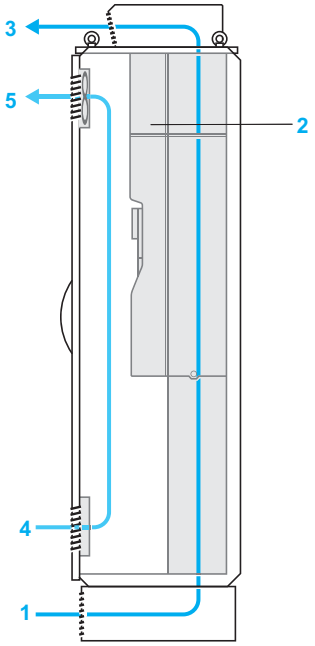

Two separate air circuits ensure optimum enclosure ventilation, cooling the power section and the control section.

Power section:

1 Air intake via a grille on the plinth
2 DC choke
3 Air outlet via a metal cover with protection against water splashes, on the enclosure roof

Control section:

4 Air intake via a grille with IP 54 filter, on the lower part of the enclosure door
5 Air outlet via a grille with a fan equipped with an IP 54 filter, on the upper part of the enclosure door

Variable speed drives

Altivar 71

IP 54 floor-standing enclosure with separate air flows

Specific characteristics

Enclosure degree of protection			IP 54 Two separate air circuits ensure optimum enclosure ventilation, cooling: ■ The power section: □ Air intake via a grille on the plinth □ Air outlet via a cover on the roof ■ The power section: □ Air intake via a grille with IP 54 filter on the lower part of the door □ Air outlet via a grille and IP 54 fan on the upper part of the door
Line supply connection			At the base of the switch
Motor connection	ATV 71EXS5D90N4…C28N4 ATV 71EXS5D90N…C25N ATV 71EXS5C11Y…C31Y		On the terminals
	ATV 71EXS5C31N4…C50N4		On the bars of the drive
	ATV 71EXS5C31N…C50N ATV 71EXS5C40Y…C63Y		On additional bars
Control terminal connection			Directly on the drive or on option terminals
Colour of SAREL Spacial 6000 Cell Enclosures			RAL 7032 enclosure RAL 7022 plinth

Environmental characteristics *(1)*

Maximum ambient pollution Definition of insulation			Degree 2 conforming to IEC/EN 61800-5-1
Vibration resistance			Conforming to standard IEC/EN 60068-2-6 1.5 mm peak to peak from 3 to 10 Hz, 0.6 g from 10 to 200 Hz (3M3 according to IEC/EN 60721-3-3)
Shock resistance			Conforming to standard IEC/EN 60068-2-7 4 g for 11 ms (3M2 according to IEC/EN 60721-3-3)
Environmental conditions Use			IEC/EN 60721-3-3 classes 3C2, 3S2 and 3K3, without condensation
Maximum relative humidity			95%
Ambient air temperature	Operation	**°C**	Incoming air temperature: 0…+ 40 (- 10…+ 40 with enclosure heater) Up to + 50°C with derating. 3K3 according to IEC/EN 60721-3-3
	Storage	**°C**	- 25…+ 70
	Control		Internal temperature monitored by a thermostat which can shut down the equipment
Volume of cooling air	ATV 71EXS5D90N4	**m³/h**	500
	ATV 71EXS5C11N4	**m³/h**	700
	ATV 71EXS5C13N4	**m³/h**	750
	ATV 71EXS5C16N4	**m³/h**	950
	ATV 71EXS5C20N4…C28N4	**m³/h**	1400
	ATV 71EXS5C31N4	**m³/h**	2200
	ATV 71EXS5C40N4	**m³/h**	2300
	ATV 71EXS5C50N4	**m³/h**	3000
	ATV 71EXS5D90N…C13N ATV 71EXS5C11Y…C16Y	**m³/h**	700
	ATV 71EXS5C16N…C25N ATV 71EXS5C20Y…C31Y	**m³/h**	1400
	ATV 71EXS5C31N…C50N ATV 71EXS5C40Y…C63Y	**m³/h**	3000

Electrical power characteristics *(1)*

Power Supply		Voltage	**V**	380 V – 15%…415 V +10% for ATV 71EXS5●●●N4 500 V – 15% for ATV 71EXS5●●●N 600…690 V +10% for ATV 71EXS5●●●Y
		Frequency	**Hz**	50/60 Hz ± 5%
Overvoltage class				Class 3 according to EN 50178
Noise level	ATV 71EXS5	D90N4…C11N4 D90N…C13N C11Y…C16Y	**dBA**	64
		C13N4…C28N4 C16N…C25N C20Y…C31Y	**dBA**	72
		C31N4…C50N4 C31N…C50N C40Y…C63Y	**dBA**	73

(1) Other characteristics, see pages 10 to 17.

Variable speed drives

Altivar 71

IP 54 floor-standing enclosure with separate air flows

Connection characteristics

Three-phase supply voltage 380…415 V 50/60 Hz

Drive terminals		Power Supply	L1/R, L2/S, L3/T			U/T1, V/T2, W/T3				Recommended cross-section for motor cables
		Upstream fuse protection	Maximum wire size on switch		Fast-acting semi-conductor fuse	Maximum wire size on terminals				
						Without motor choke		With motor choke		
			Bar	Terminals		Bar	Terminals	Bar	Terminals	
		A	mm²	mm²	A	mm²	mm²	mm²	mm²	mm²
Cable entry via the bottom	ATV 71EXS5D90N4	250	M10, 2 x 120	–	250	–	2 x 120	–	2 x 120	3 x 95
	ATV 71EXS5C11N4	315	M10, 2 x 120	–	315	–	2 x 120	–	2 x 120	3 x 120
	ATV 71EXS5C13N4	400	M10, 2 x 120	–	400	–	2 x 120	–	2 x 120	3 x 150
	ATV 71EXS5C16N4	400	M10, 2 x 150	–	400	–	2 x 120	2 x M12, 4 x 240	–	2 (3 x 95)
	ATV 71EXS5C20N4	500	2 x M12, 4 x 240	–	500	–	2 x 185	2 x M12, 4 x 240	–	2 (3 x 120)
	ATV 71EXS5C25N4	630	2 x M12, 4 x 240	–	630	–	4 x 120	2 x M12, 4 x 240	–	2 (3 x 150)
	ATV 71EXS5C28N4	800	2 x M12, 4 x 240	–	700	–	4 x 120	2 x M12, 4 x 240	–	3 (3 x 150)
	ATV 71EXS5C31N4	800	2 x M12, 4 x 240	–	800	2 x M12, 4 x 240	–	2 x M12, 4 x 240	–	3 (3 x 185)
	ATV 71EXS5C40N4	1000	2 x M12, 4 x 240	–	2 x 500	2 x M12, 4 x 240	–	2 x M12, 4 x 240	–	4 (3 x 185)
	ATV 71EXS5C50N4	1250	3 x M12, 6 x 240	–	2 x 630	3 x M12, 6 x 240	–	3 x M12, 6 x 240	–	5 (3 x 185)
Cable entry via the top	ATV 71EXS5D90N4	250	–	2 x 120	250	–	2 x 120	–	2 x 120	3 x 95
	ATV 71EXS5C11N4	315	–	2 x 120	315	–	2 x 120	–	2 x 120	3 x 120
	ATV 71EXS5C13N4	400	–	2 x 120	400	–	2 x 120	–	2 x 120	2 x 150
	ATV 71EXS5C16N4	400	–	2 x 120	400	–	2 x 120	2 x M12, 4 x 240	–	2 (3 x 95)
	ATV 71EXS5C20N4	500	–	2 x 185	500	–	2 x 185	2 x M12, 4 x 240	–	2 (3 x 120)
	ATV 71EXS5C25N4	630	–	4 x 120	630	–	4 x 120	2 x M12, 4 x 240	–	2 (3 x 150)
	ATV 71EXS5C28N4	800	–	4 x 120	700	–	4 x 120	2 x M12, 4 x 240	–	3 (3 x 150)
	ATV 71EXS5C31N4	800	2 x M12, 4 x 240	–	800	2 x M12, 4 x 240	–	2 x M12, 4 x 240	–	3 (3 x 185)
	ATV 71EXS5C40N4	1000	2 x M12, 4 x 240	–	2 x 500	2 x M12, 4 x 240	–	2 x M12, 4 x 240	–	4 (3 x 185)
	ATV 71EXS5C50N4	1250	3 x M12, 6 x 240	–	2 x 630	3 x M12, 6 x 240	–	3 x M12, 6 x 240	–	5 (3 x 185)

Connection characteristics (continued)

Three-phase supply voltage 500 V 50/60 Hz

Drive terminals		Power Supply	L1/R, L2/S, L3/T			U/T1, V/T2, W/T3				Recommended cross-section for motor cables
		Upstream fuse protection	Maximum wire size on switch		Fast-acting semi-conductor fuse	Maximum wire size on terminals				
						Without motor choke		With motor choke		
			Bar	Terminals		Bar	Terminals	Bar	Terminals	
		A	mm²	mm²	A	mm²	mm²	mm²	mm²	mm²
Cable entry via the bottom	ATV 71EXS5D90N	200	M10, 2 x 120	–	200	–	2 x 185	–	2 x 185	3 x 70
	ATV 71EXS5C11N	200	M10, 2 x 120	–	200	–	2 x 185	–	2 x 185	3 x 95
	ATV 71EXS5C13N	250	M10, 2 x 120	–	250	–	2 x 185	–	2 x 185	3 x 120
	ATV 71EXS5C16N	315	2 x M12, 4 x 240	–	315	–	4 x 120	4 x M12, 6 x 240	–	3 x 185
	ATV 71EXS5C20N	400	2 x M12, 4 x 240	–	400	–	4 x 120	4 x M12, 6 x 240	–	2 (3 x 120)
	ATV 71EXS5C25N	500	2 x M12, 4 x 240	–	500	–	4 x 120	4 x M12, 6 x 240	–	2 (3 x 150)
	ATV 71EXS5C31N	630	3 x M12, 6 x 240	–	2 x 315	3 x M12, 6 x 240	–	4 x M12, 6 x 240	–	3 (3 x 150)
	ATV 71EXS5C40N	800	3 x M12, 6 x 240	–	2 x 400	3 x M12, 6 x 240	–	4 x M12, 6 x 240	–	3 (3 x 185)
	ATV 71EXS5C50N	1000	3 x M12, 6 x 240	–	2 x 500	3 x M12, 6 x 240	–	4 x M12, 6 x 240	–	4 (3 x 185)
Cable entry via the top	ATV 71EXS5D90N	200	–	2 x 185	200	–	2 x 185	–	2 x 185	3 x 70
	ATV 71EXS5C11N	200	–	2 x 185	200	–	2 x 185	–	2 x 185	3 x 95
	ATV 71EXS5C13N	250	–	2 x 185	250	–	2 x 185	–	2 x 185	3 x 120
	ATV 71EXS5C16N	315	4 x M12, 6 x 240	–	315	4 x M12, 6 x 240	–	4 x M12, 6 x 240	–	3 x 185
	ATV 71EXS5C20N	400	4 x M12, 6 x 240	–	400	4 x M12, 6 x 240	–	4 x M12, 6 x 240	–	2 (3 x 120)
	ATV 71EXS5C25N	500	4 x M12, 6 x 240	–	500	4 x M12, 6 x 240	–	4 x M12, 6 x 240	–	2 (3 x 150)
	ATV 71EXS5C31N	630	4 x M12, 6 x 240	–	2 x 315	4 x M12, 6 x 240	–	4 x M12, 6 x 240	–	3 (3 x 150)
	ATV 71EXS5C40N	800	4 x M12, 6 x 240	–	2 x 400	4 x M12, 6 x 240	–	4 x M12, 6 x 240	–	3 (3 x 185)
	ATV 71EXS5C50N	1000	4 x M12, 6 x 240	–	2 x 500	4 x M12, 6 x 240	–	4 x M12, 6 x 240	–	4 (3 x 185)

Connection characteristics (continued)

Three-phase supply voltage 600…690 V 50/60 Hz

Drive terminals		Power Supply	L1/R, L2/S, L3/T			U/T1, V/T2, W/T3				Recommended cross-section for motor cables
		Upstream fuse protection	Maximum wire size on switch		Fast-acting semi-conductor	Maximum wire size on terminals				
						Without motor choke		With motor choke		
			Bar	Terminals		Bar	Terminals	Bar	Terminals	
		A	mm²	mm²	A	mm²	mm²	mm²	mm²	mm²
Cable entry via the bottom	ATV 71EXS5C11Y	200	M10, 2 x 120	–	200	–	2 x 185	–	2 x 185	3 x 70
	ATV 71EXS5C13Y	200	M10, 2 x 120	–	200	–	2 x 185	–	2 x 185	3 x 95
	ATV 71EXS5C16Y	250	M10, 2 x 150	–	250	–	2 x 185	–	2 x 185	3 x 120
	ATV 71EXS5C20Y	315	2 x M12, 4 x 240	–	315	–	4 x 120	4 x M12, 6 x 240	–	3 x 185
	ATV 71EXS5C25Y	400	2 x M12, 4 x 240	–	400	–	4 x 120	4 x M12, 6 x 240	–	2 (3 x 120)
	ATV 71EXS5C31Y	500	2 x M12, 4 x 240	–	500	–	4 x 120	4 x M12, 6 x 240	–	2 (3 x 150)
	ATV 71EXS5C40Y	630	3 x M12, 6 x 240	–	2 x 315	3 x M12, 6 x 240	–	4 x M12, 6 x 240	–	3 (3 x 150)
	ATV 71EXS5C50Y	800	3 x M12, 6 x 240	–	2 x 400	3 x M12, 6 x 240	–	4 x M12, 6 x 240	–	3 (3 x 185)
	ATV 71EXS5C63Y	1000	3 x M12, 6 x 240	–	2 x 500	3 x M12, 6 x 240	–	4 x M12, 6 x 240	–	4 (3 x 185)
Cable entry via the top	ATV 71EXS5C11Y	200	–	2 x 185	200	–	2 x 185	–	2 x 185	3 x 70
	ATV 71EXS5C13Y	200	–	2 x 185	200	–	2 x 185	–	2 x 185	3 x 95
	ATV 71EXS5C16Y	250	–	2 x 185	250	–	2 x 185	–	2 x 185	3 x 120
	ATV 71EXS5C20Y	315	4 x M12, 6 x 240	–	315	4 x M12, 6 x 240	–	4 x M12, 6 x 240	–	3 x 185
	ATV 71EXS5C25Y	400	4 x M12, 6 x 240	–	400	4 x M12, 6 x 240	–	4 x M12, 6 x 240	–	2 (3 x 120)
	ATV 71EXS5C31Y	500	4 x M12, 6 x 240	–	500	4 x M12, 6 x 240	–	4 x M12, 6 x 240	–	2 (3 x 150)
	ATV 71EXS5C40Y	630	4 x M12, 6 x 240	–	2 x 315	4 x M12, 6 x 240	–	4 x M12, 6 x 240	–	3 (3 x 150)
	ATV 71EXS5C50Y	800	4 x M12, 6 x 240	–	2 x 400	4 x M12, 6 x 240	–	4 x M12, 6 x 240	–	3 (3 x 185)
	ATV 71EXS5C63Y	1000	4 x M12, 6 x 240	–	2 x 500	4 x M12, 6 x 240	–	4 x M12, 6 x 240	–	4 (3 x 185)

Variable speed drives

Altivar 71

IP 54 floor-standing enclosure with separate air flows

524528

ATV 71EXS5C13N4

IP 54 floor-standing enclosure with separate air flows

Three-phase supply voltage 380…415 V 50/60 Hz

Degree of protection	Line supply Max. prospective line Isc *(1)*	With drive	Reference	Weight
	kA			kg
IP 54	50	ATV 71HD90N4	**ATV 71EXS5D90N4**	310.000
		ATV 71HC11N4	**ATV 71EXS5C11N4**	310.000
		ATV 71HC13N4	**ATV 71EXS5C13N4**	335.000
		ATV 71HC16N4	**ATV 71EXS5C16N4**	345.000
		ATV 71HC20N4	**ATV 71EXS5C20N4**	400.000
		ATV 71HC25N4	**ATV 71EXS5C25N4**	480.000
		ATV 71HC28N4	**ATV 71EXS5C28N4**	480.000
		ATV 71HC31N4	**ATV 71EXS5C31N4**	745.000
		ATV 71HC40N4	**ATV 71EXS5C40N4**	765.000
		ATV 71HC50N4	**ATV 71EXS5C50N4**	900.000

Three-phase supply voltage 500 V 50/60 Hz

Degree of protection	Line supply Max. prospective line Isc *(1)*	With drive	Reference	Weight
	kA			kg
IP 54	50	ATV 71HC11Y	**ATV 71EXS5D90N**	436.000
		ATV 71HC13Y	**ATV 71EXS5C11N**	487.000
		ATV 71HC16Y	**ATV 71EXS5C13N**	487.000
		ATV 71HC20Y	**ATV 71EXS5C16N**	573.000
		ATV 71HC25Y	**ATV 71EXS5C20N**	623.000
		ATV 71HC31Y	**ATV 71EXS5C25N**	623.000
		ATV 71HC40Y	**ATV 71EXS5C31N**	912.000
		ATV 71HC50Y	**ATV 71EXS5C40N**	1000.000
		ATV 71HC63Y	**ATV 71EXS5C50N**	1000.000

Three-phase supply voltage 600…690 V 50/60 Hz

Degree of protection	Line supply Max. prospective line Isc *(1)*	With drive	Reference	Weight
	kA			kg
IP 54	50	ATV 71HC11Y	**ATV 71EXS5C11Y**	436.000
		ATV 71HC13Y	**ATV 71EXS5C13Y**	487.000
		ATV 71HC16Y	**ATV 71EXS5C16Y**	487.000
		ATV 71HC20Y	**ATV 71EXS5C20Y**	573.000
		ATV 71HC25Y	**ATV 71EXS5C25Y**	623.000
		ATV 71HC31Y	**ATV 71EXS5C31Y**	623.000
		ATV 71HC40Y	**ATV 71EXS5C40Y**	912.000
		ATV 71HC50Y	**ATV 71EXS5C50Y**	1000.000
		ATV 71HC63Y	**ATV 71EXS5C63Y**	1000.000

(1) These values are given for use with upstream fuses, see pages 83 to 85

Presentation: page 80
Characteristics: pages 81 to 85
Dimensions: pages 94 to 96
Mounting recommendations: pages 96 and 97
Schemes: pages 98 to 107

Variable speed drives

Altivar 71

IP 54 floor-standing enclosure with separate air flows
Common options

Common options without modification of the enclosure (1)

Description	Reference	Weight kg
Adapter for 115 V ∿ logic inputs	**VW3 A3E 101** *(2)*	0.200
Encoder interface cards with RS 422, 5 V compatible differential outputs	**VW3 A3E 401** *(3)*	0.200
Encoder interface cards with RS 422, 15 V compatible differential outputs	**VW3 A3E 402** *(3)*	0.200
Encoder interface card with 12 V open collector outputs	**VW3 A3E 403** *(3)*	0.200
Encoder interface card with 15 V open collector outputs	**VW3 A3E 404** *(3)*	0.200
Encoder interface card with 12 V push-pull outputs	**VW3 A3E 405** *(3)*	0.200
Encoder interface card with 15 V push-pull outputs	**VW3 A3E 406** *(3)*	0.200
Encoder interface card with 24 V push-pull outputs	**VW3 A3E 407** *(3)*	0.200
Resolver encoder interface card 1.25…5.6 V	**VW3 A3E 408** *(3)*	0.200
Universal encoder interface card with SinCos, SinCos Hiperface®, EnDat® or SSI 5, 8 or 12 V output	**VW3 A3E 409** *(3)*	0.200
Encoder interface card with RS 422 compatible differential outputs with encoder emulation (RS 422 ESIM)	**VW3 A3E 411** *(3)*	0.200
Logic I/O extension card	**VW3 A3E 201** *(4)*	0.320
Extended I/O extension card	**VW3 A3E 202** *(4)*	0.300
"Controller Inside" programmable card equipped with a 9-way male SUB-D connector	**VW3 A3E 501** *(5) (6)*	0.300
Modbus TCP communication card	**VW3 A3E 310** *(7)*	0.300
EtherNet/IP communication card	**VW3 A3E 316** *(7)*	0.300
Modbus/Uni-Telway communication card	**VW3 A3E 303** *(7)*	0.300
Standard Fipio communication card	**VW3 A3E 311** *(7)*	0.300
Substitution Fipio communication card	**VW3 A3E 301** *(7)*	0.300
Modbus Plus communication card	**VW3 A3E 302** *(7)*	0.300
PROFIBUS DP communication card	**VW3 A3E 307** *(7)*	0.300
DeviceNet communication card	**VW3 A3E 309** *(7)*	0.300
InterBus communication card	**VW3 A3E 304** *(7)*	0.300
CC-Link communication card	**VW3 A3E 317** *(7)*	0.320

(1) For any other configuration, please consult your Regional Sales Office.
(2) The technical characteristics of the VW3 A3E 101 adapter are identical to those of the VW3 A3 101 adapter, see page 26.
(3) The technical characteristics of the VW3 A3E 401…409 and 411 encoder interface cards are identical to those of the VW3 A3 401…409 and 411 encoder interface cards, see pages 111 to 113.
(4) The technical characteristics of the VW3 A3E 201 and VW3 A3E 202 I/O extension cards are identical to those of the VW3 A3 201 and VW3 A3 202 I/O extension cards, see pages 114 and 115.
(5) The technical characteristics of the VW3 A3E 501 "Controller Inside" programmable card are identical to those of the VW3 A3 501 "Controller Inside" programmable card, see page 118.
(6) If the power consumption table does not exceed 200 mA, the "Controller Inside" programmable card can be powered by Altivar 71 drives. Above 200 mA, the VW3 AE 1401 additional 24 V ⎓ power supply option must be ordered, see page 88.
(7) The technical characteristics of the VW3 A3E 301…304, 307, 309…311, 316 and 317 communication cards are identical to those of the VW3 A3 301…304, 307, 309…311, 316 and 317 communication cards, see pages 126 to 131.

Variable speed drives

Altivar 71

IP 54 floor-standing enclosure with separate air flows

Common options

Common options without modification of the enclosure (continued) *(1)*

Description	Reference	Weight kg
Remote control terminals X12	**VW3 AE 1201**	0.700
Remote option card terminals X13 *(2)* for I/O extension cards VW3 A3E 201 and 202	**VW3 AE 1202**	0.900
External source terminals 230 V ∿	**VW3 AE 1301**	0.100
Additional 24 V ⎓ power supply, nominal current 2 A *(3)*	**VW3 AE 1401**	2.200
External source terminals 24 V ⎓	**VW3 AE 1402**	0.100
Emergency stop button	**VW3 AE 1501**	0.100
"Preventa type AC" fault relay	**VW3 AE 1502**	0.100
"Preventa type ATE" fault relay	**VW3 AE 1503**	0.100
Enclosure lighting	**VW3 AE 1601**	1.500
Key switch (Local Remote)	**VW3 AE 1801**	0.200
Additional electrical input isolation	**VW3 AE 1901**	0.100
Additional electrical output isolation	**VW3 AE 1902**	0.100
PTC relay	**VW3 AE 2001**	0.100
PTC relay with PTB (ATEX) certification *(4)*	**VW3 AE 2002**	0.100
PT100 relay for motor winding	**VW3 AE 2003**	0.300
PT100 relay for motor bearings	**VW3 AE 2004**	0.300
Motor heater 200 W, 230 V	**VW3 AE 2101**	0.200
Power supply circuit with 400 V protection for 1000 W external fan	**VW3 AE 2102**	0.200
Relay for logic output	**VW3 AE 2201**	0.100
Voltmeter three-phase supply voltage 380…415 V	**VW3 AE 2301**	0.400
Voltmeter three-phase supply voltage 500 V	**VW3 AE 2302**	0.400
Voltmeter three-phase supply voltage 600…690 V	**VW3 AE 2303**	0.400

(1) For any other configuration, please consult your Regional Sales Office.
(2) The X13 terminals, reference VW3 AE 1202, include the X12 terminals, reference VW3 AE 1201.
(3) Mandatory when the power consumption table for the option cards exceeds 200 mA.
(4) ATEX: see pages 220 and 221.

Variable speed drives

Altivar 71

IP 54 floor-standing enclosure with separate air flows
Options dependent on drive rating

Options dependent on the drive rating (1)

Three-phase supply voltage 380…415 V 50/60 Hz

Description	For ATV 71 enclosure	Reference (2)	Weight kg
Resistance braking unit	EXS5C20N4…C28N4	**VW3 A7E 101** (3)	31.000
	EXS5C31N4…C50N4	**VW3 A7E 102** (3)	205.000
Isolating handle for switch	EXS5D90N4, C11N4	**VW3 AE 0103**	1.000
	EXS5C13N4…C28N4	**VW3 AE 0104**	2.000
	EXS5C31N4…C50N4	**VW3 AE 0105**	2.000
Circuit-breaker	EXS5D90N4, C11N4	**VW3 AE 0106**	1.400
	EXS5C13N4…C20N4	**VW3 AE 0107**	1.400
	EXS5C25N4…C31N4	**VW3 AE 0109**	1.400
	EXS5C40N4	**VW3 AE 0111**	9.400
	EXS5C50N4	**VW3 AE 0112**	9.400
Door handle for circuit-breaker	EXS5D90N4, C11N4	**VW3 AE 0114**	1.000
	EXS5C13N4…C31N4	**VW3 AE 0115**	2.000
	EXS5C40N4, C50N4	**VW3 AE 0116**	2.000
230 V undervoltage coil for circuit-breaker	EXS5D90N4…C31N4	**VW3 AE 0117**	0.500
	EXS5C40N4, C50N4	**VW3 AE 0118**	0.500
110 V undervoltage coil for circuit-breaker	EXS5D90N4…C31N4	**VW3 AE 0119**	0.500
	EXS5C40N4, C50N4	**VW3 AE 0120**	0.500
230 V motor for circuit-breaker	EXS5D90N4, C11N4	**VW3 AE 0121**	0.950
	EXS5C13N4…C20N4	**VW3 AE 0122**	3.000
	EXS5C25N4…C31N4	**VW3 AE 0123**	3.000
	EXS5C40N4	**VW3 AE 0124**	7.000
	EXS5C50N4	**VW3 AE 0125**	7.000
110 V motor for circuit-breaker	EXS5D90N4, C11N4	**VW3 AE 0127**	0.950
	EXS5C13N4…C20N4	**VW3 AE 0128**	3.000
	EXS5C25N4…C31N4	**VW3 AE 0129**	3.000
	EXS5C40N4	**VW3 AE 0130**	7.000
	EXS5C50N4	**VW3 AE 0131**	7.000
Line contactor	EXS5D90N4, C11N4	**VW3 AE 0206**	7.000
	EXS5C13N4	**VW3 AE 0218**	10.000
	EXS5C16N4	**VW3 AE 0215**	7.000
	EXS5C20N4…C28N4	**VW3 AE 0216**	10.000
	EXS5C31N4	**VW3 AE 0210**	14.000
	EXS5C40N4	**VW3 AE 0212**	24.000
	EXS5C50N4	**VW3 AE 0213**	28.000

(1) For any other configuration, please consult your Regional Sales Office.
(2) The options depend on the rating of the drive and may lead to modification of the size of the enclosure.
(3) The technical characteristics of the VW3 A7E 101 and VW3 A7E 102 braking units are identical to those of the VW3 A7 101 and VW3 A7 102 braking units, see page 134.

Variable speed drives

Altivar 71

IP 54 floor-standing enclosure with separate air flows
Options dependent on drive rating

Options dependent on the drive rating (continued) *(1)*

Three-phase supply voltage 380…415 V 50/60 Hz (continued)

Description	For ATV 71 enclosure	Reference *(2)*	Weight kg
Control transformer 500 VA ∼, output 230 V ∼	EXS5D90N4…C28N4	**VW3 AE 0302**	8.000
Control transformer 800 VA ∼, output 230 V ∼	EXS5C31N4…C50N4	**VW3 AE 0303**	11.000
Ammeter	EXS5D90N4	**VW3 AE 0405**	0.200
	EXS5C11N4, C13N4	**VW3 AE 0406**	0.200
	EXS5C16N4	**VW3 AE 0407**	0.200
	EXS5C20N4…C28N4	**VW3 AE 0408**	0.200
	EXS5C31N4	**VW3 AE 0409**	0.200
	EXS5C40N4	**VW3 AE 0410**	0.200
	EXS5C50N4	**VW3 AE 0411**	0.200
Enclosure heater	EXS5D90N4…C28N4	**VW3 AE 0501**	0.500
	EXS5C31N4…C50N4	**VW3 AE 0502**	1.000
Motor choke	EXS5D90N4	**VW3 AE 0615**	37.000
	EXS5C11N4, C13N4	**VW3 AE 0617**	55.000
	EXS5C16N4	**VW3 AE 0619**	157.000
	EXS5C20N4	**VW3 AE 0620**	160.000
	EXS5C25N4, C28N4	**VW3 AE 0621**	192.000
	EXS5C31N4	**VW3 AE 0622**	197.000
	EXS5C40N4	**VW3 AE 0624**	228.000
	EXS5C50N4	**VW3 AE 0625**	234.000
Sinus filter *(3)*	EXS5D90N4	**VW3 AE 0665**	318.000
	EXS2C11N4	**VW3 AE 0666**	325.000
	EXS5C13N4	**VW3 AE 0668**	365.000
	EXS5C16N4	**VW3 AE 0669**	373.000
	EXS5C20N4	**VW3 AE 0671**	394.000
	EXS5C25N4…C28N4	**VW3 AE 0672**	434.000
	EXS5C31N4	**VW3 AE 0673**	445.000
	EXS5C40N4	**VW3 AE 0675**	900.000
	EXS5C50N4	**VW3 AE 0676**	930.000

(1) For any other configuration, please consult your Regional Sales Office.
(2) The options depend on the rating of the drive and may lead to modification of the size of the enclosure.
(3) Option not compatible with the "Cable entry via the top" option.

Variable speed drives

Altivar 71

IP 54 floor-standing enclosure with separate air flows
Options dependent on drive rating

Options dependent on the drive rating (continued) *(1)*

Three-phase supply voltage 380…415 V 50/60 Hz (continued)

Description	Use	For ATV 71 enclosure	Reference *(2)*	Weight kg
Cable entry via the top *(3)*	Without motor choke	EXS5D90N4, C11N4	**VW3 AE 0715**	123.000
		EXS5C13N4	**VW3 AE 0716**	123.000
		EXS5C16N4	**VW3 AE 0717**	123.000
		EXS5C20N4…C28N4	**VW3 AE 0718**	141.000
		EXS5C31N4	**VW3 AE 0719**	123.000
		EXS5C40N4	**VW3 AE 0720**	141.000
		EXS5C50N4	**VW3 AE 0721**	141.000
	With motor choke	EXS5C16N4	**VW3 AE 0722**	123.000
		EXS5C20N4…C28N4	**VW3 AE 0723**	141.000
		EXS5C31N4	**VW3 AE 0724**	–
		EXS5C40N4	**VW3 AE 0725**	–
		EXS5C50N4	**VW3 AE 0726**	–
Plinth equipped with a fine mesh grille		EXS5D90N4…C16N4	**VW3 AE 0812**	2.000
		EXS5C20N4…C28N4	**VW3 AE 0813**	3.000
		EXS5C31N4, C40N4	**VW3 AE 0814**	4.000
		EXS5C50N4	**VW3 AE 0815**	5.000

(1) For any other configuration, please consult your Regional Sales Office.
(2) The options depend on the rating of the drive and may lead to modification of the size of the enclosure.
(3) Option not compatible with the "Sinus filter" option.

Variable speed drives

Altivar 71

IP 54 floor-standing enclosure with separate air flows
Options dependent on drive rating

Options dependent on the drive rating (continued) *(1)*

Three-phase supply voltage 380…415 V 50/60 Hz (continued)

Description	Use	For ATV 71 enclosure	Reference *(2)*	Weight kg
Air conditioning	Without motor choke	EXS5D90N4	**VW3 AE 0901**	29.500
		EXS5C11N4	**VW3 AE 0902**	29.500
		EXS5C13N4	**VW3 AE 0903**	26.500
		EXS5C16N4	**VW3 AE 0904**	53.000
		EXS5C20N4…C28N4	**VW3 AE 0905**	68.000
		EXS5C31N4	**VW3 AE 0906**	68.000
		EXS5C40N4	**VW3 AE 0907**	68.000
		EXS5C50N4	**VW3 AE 0908**	83.000
	With motor choke	EXS5D90N4	**VW3 AE 0909**	53.000
		EXS5C11N4	**VW3 AE 0911**	53.000
		EXS5C13N4	**VW3 AE 0912**	68.000
		EXS5C16N4	**VW3 AE 0914**	68.000
		EXS5C20N4…C28N4	**VW3 AE 0915**	68.000
		EXS5C31N4	**VW3 AE 0916**	65.000
		EXS5C40N4	**VW3 AE 0917**	80.000
		EXS5C50N4	**VW3 AE 0918**	80.000

(1) For any other configuration, please consult your Regional Sales Office.
(2) The options depend on the rating of the drive and may lead to modification of the size of the enclosure.

Variable speed drives

Altivar 71

IP 54 floor-standing enclosure with separate air flows
Options dependent on drive rating

Options dependent on the drive rating (continued) (1)

Three-phase supply voltage 500 V and 600…690 V 50/60 Hz (continued)

Description	Use	For ATV 71 enclosure		Reference (2)	Weight
		500 V	600…690 V		kg
Resistance braking unit	–	EXS5C16N…C25N	EXS5C20Y…C31Y	**VW3 A7E 103** (3)	205.000
		EXS5C31N…C50N	EXS5C40Y…C63Y	**VW3 A7E 104** (3)	205.000
Isolating handle for switch	–	EXS5D90N…C13N	EXS5C11Y…C16Y	**VW3 AE 0103**	1.000
		EXS5C16N…C25N	EXS5C20Y…C31Y	**VW3 AE 0104**	2.000
		EXS5C31N…C50N	EXS5C40Y…C63Y	**VW3 AE 0105**	2.000
Ammeter	–	EXS5D90N	EXS5C11Y	**VW3 AE 0404**	0.200
		EXS5C11N, C13N	EXS5C13Y…C20Y	**VW3 AE 0405**	0.200
		EXS5C16N	EXS5C25Y	**VW3 AE 0406**	0.200
		EXS5C20N	EXS5C31Y	**VW3 AE 0407**	0.200
		EXS5C25N, C31N	EXS5C40Y	**VW3 AE 0408**	0.200
		EXS5C40N	EXS5C50Y, C63Y	**VW3 AE 0409**	0.200
		EXS5C50N	–	**VW3 AE 0410**	0.200
Enclosure heater	–	EXS5D90N…C25N	EXS5C11Y…C31Y	**VW3 AE 0501**	0.500
		EXS5C31N…C50N	EXS5C40Y…C63Y	**VW3 AE 0502**	1.000
Motor choke	–	EXS5D90N, C11N	EXS5C11Y, C13Y	**VW3 AE 0603**	17.000
		EXS5C13N, C16N	EXS5C16Y, C20Y	**VW3 AE 0604**	35.000
		EXS5C20N, C25N	EXS5C25Y, C31Y	**VW3 AE 0605**	64.000
		EXS5C31N, C40N	EXS5C40Y, C50Y	**VW3 AE 0630**	197.000
		EXS5C50N	EXS5C63Y	**VW3 AE 0631**	234.000
Cable entry via the top	Without motor choke	EXS5D90N…C13N	EXS5C11Y…C16Y	**VW3 AE 0732**	–
		EXS5C16N…C25N	EXS5C20Y…C31Y	**VW3 AE 0733**	–
		EXS5C31N…C50N	EXS5C40Y…C63Y	**VW3 AE 0734**	252.000
	With motor choke	EXS5D90N…C13N	EXS5C11Y…C16Y	**VW3 AE 0735**	108.000
		EXS5C16N…C25N	EXS5C20Y…C31Y	**VW3 AE 0736**	126.000
		EXS5C31N…C50N	EXS5C40Y…C63Y	**VW3 AE 0737**	252.000
Plinth with fine mesh grille	–	EXS5D90N…C13N	EXS5C11Y…C16Y	**VW3 AE 0812**	2.000
		EXS5C16N…C25N	EXS5C20Y…C31Y	**VW3 AE 0813**	3.000
		EXS5C31N…C50N	EXS5C40Y…C63Y	**VW3 AE 0815**	5.000
Air conditioning	Without motor choke	EXS5D90N…C13N	EXS5C11Y…C16Y	**VW3 AE 0919**	29.500
		EXS5C16N…C25N	EXS5C20Y…C31Y	**VW3 AE 0920**	56.000
		EXS5C31N…C50N	EXS5C40Y…C63Y	**VW3 AE 0921**	71.000
	With motor choke	EXS5D90N…C13N	EXS5C11Y…C16Y	**VW3 AE 0922**	56.000
		EXS5C16N…C25N	EXS5C20Y…C31Y	**VW3 AE 0923**	71.000
		EXS5C31N, C40N	EXS5C40Y, C50Y	**VW3 AE 0924**	71.000
		EXS5C50N	EXS5C63Y	**VW3 AE 0925**	86.000

(1) For any other configuration, please consult your Regional Sales Office.
(2) The options depend on the rating of the drive and may lead to modification of the size of the enclosure.
(3) The technical characteristics of the VW3 A7E 103 and VW3 A7E 104 braking units are identical to those of the VW3 A7 103 and VW3 A7 104 braking units, see page 134.

Variable speed drives

Altivar 71

IP 54 floor-standing enclosure with separate air flows

IP 54 floor-standing enclosure with separate air flows

ATV 71EXS5D90N4…EXS5C28N4, ATV 71 EXS5D90N…EXS5C25N, ATV 71EXS5C11Y…EXS5C31Y

Common side view

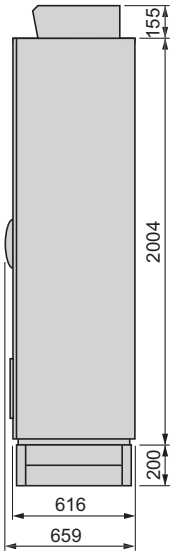

Standard floor-standing enclosure

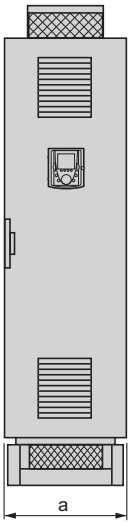

Standard floor-standing enclosure + additional enclosures, according to the configuration

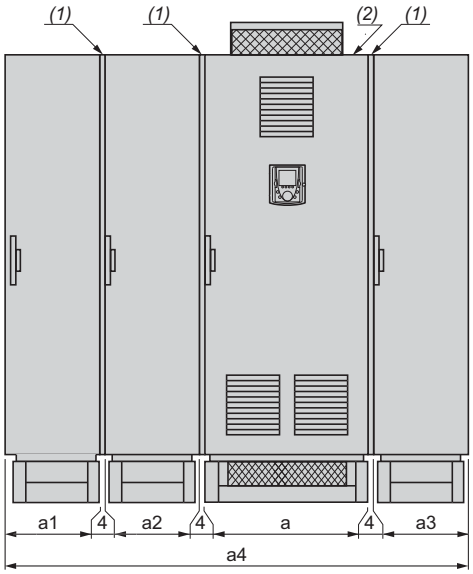

***Note**: The positions of the enclosures must be adhered to during installation. The number of additional enclosures can vary according to the chosen configuration.*

ATV 71 enclosures	Options	a	a1	a2	a3	a4
EXCS5D90N4…EXCS5C13N4	With or without common options or options *(3)* dependent on the drive rating	616				616
	Cable entry via the top option *(4)*	608		408		1020
	Sinus filter option	608			608	1220
EXCS5C16N4	With or without common options or options *(3)* dependent on the drive rating	616				616
	Motor choke option	608			408	1020
	Cable entry via the top option *(4)*	608		408		1020
	Motor choke + cable entry via the top option	600		408	408	1424
	Sinus filter option	608			608	1220
EXCS5C20N4…EXCS5C28N4	With or without common options or options *(3)* dependent on the drive rating	816				816
	Cable entry via the top option *(4)*	808		408		1220
	Sinus filter option	808			608	1420
	Motor choke option	808			408	1220
	Motor choke + cable entry via the top option	800		408	408	1624
EXCS5D90N…EXCS5C13N, EXCS5C11Y…EXCS5C16Y	With or without common options or options dependent on the drive rating	608			408	1020
	Cable entry via the top option	608			408	1020
	Cable entry via the top + motor choke option	600		408	408	1424
EXCS5C16N…EXCS5C25N, EXCS5C20Y…EXCS5C31Y	With or without common options or options dependent on the drive rating	808			408	1220
	Cable entry via the top option	808			408	1220
	Braking unit option	800		408	408	1624
	Braking unit + cable entry via the top options	800		408	408	1624
	Motor choke + cable entry via the top option	800		408	408	1624
	Motor choke + braking unit + cable entry via the top option	800	408	400	408	2028

(1) Seal. For each additional floor-standing enclosure, allow a 4 mm space for the seal.
(2) Standard version floor-standing enclosure.
(3) Except sinus filter option, which requires an additional enclosure. See table above. The sinus filter option is not compatible with the cable entry via the top option.
(4) The cable entry via the top option is not compatible with the sinus filter option.

IP 54 floor-standing enclosure with separate air flows (continued)

ATV 71EXS5C31N4…EXS5C50N4, ATV 71EXS5C31N…EXS5C50N, ATV 71EXS5C40Y…EXS5C63Y

Common side view

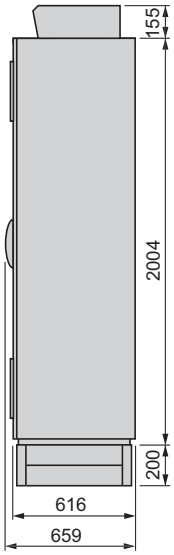

Standard floor-standing enclosure

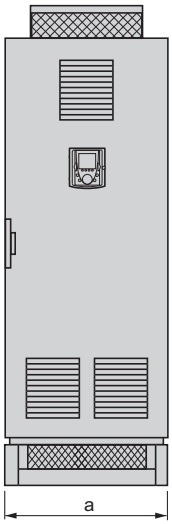

Standard floor-standing enclosure + additional enclosures, according to the configuration

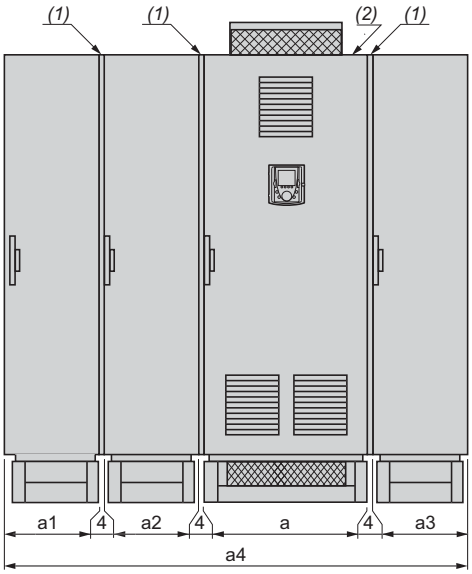

***Note**: The positions of the enclosures must be adhered to during installation. The number of additional enclosures can vary according to the chosen configuration.*

ATV 71 enclosures	Options	a	a1	a2	a3	a4
EXS5C31N4	With or without common options or options *(3)* dependent on the drive rating	1008		408		1420
	Cable entry via the top option *(4)*	1000		408	408	1824
	Braking unit option only and/or options *(3)* dependent on rating	1008	408	400		1824
	Braking unit + cable entry via the top options *(4)*	1000	408	400	408	2228
	Motor choke option	1000		408	408	1824
	Sinus filter option	1000		408	608	2024
EXS5C40N4	With or without common options or options *(3)* dependent on the drive rating	1008		408		1420
	Cable entry via the top option *(4)*	1000		408	408	1824
	Braking unit option only and/or options *(3)* dependent on rating	1008	408	400		1824
	Braking unit + cable entry via the top options *(4)*	1000	408	400	408	2228
	Motor choke option	1000		408	408	1824
	Sinus filter option	1000		408	808	2224
EXS5C50N4	With or without common options or options *(3)* dependent on the drive rating	1208		408		1620
	Cable entry via the top option *(4)*	1200		408	408	2024
	Braking unit option only and/or options *(3)* dependent on rating	1208	408	400		2024
	Braking unit + cable entry via the top options *(4)*	1200	408	400	408	2428
	Motor choke option	1200		408	408	2024
	Sinus filter option	1200		408	808	2424
EXS5C31N…EXS5C50N, EXS5C40Y…EXS5C63Y	With or without common options or options dependent on the drive rating	1208		408		1620
	Cable entry via the top option	1200		408	408	2024
	Braking unit option only and/or options *(3)* dependent on rating	1208	408	400		2024
	Braking unit + cable entry via the top options	1200	408	400	408	2428
	Motor choke option	1200		408	408	2024

(1) Seal. For each additional floor-standing enclosure, allow a 4 mm space for the seal.
(2) Standard version floor-standing enclosure.
(3) Except sinus filter option, which requires an additional enclosure. See table above. The sinus filter option is not compatible with the cable entry via the top option.
(4) The cable entry via the top option is not compatible with the sinus filter option.

IP 54 floor-standing enclosure with separate air flows (continued)

Air conditioned option VW3 AE 0901…0909, 0911, 0912, 0914…0918, 0919…0925

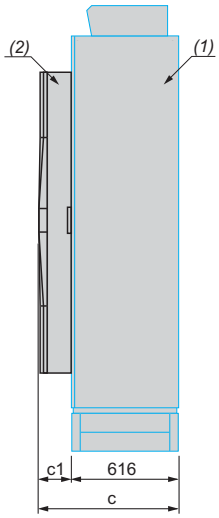

VW3	c	c1
AE 0901…0903	847	231
AE 0904	796	180
AE 0905…0907	856	240
AE 0908	976	360
AE 0909, 0911, 0912	796	180
AE 0914…0916	856	240
AE 0917, 0918	976	360
AE 0919	847	231
AE 0920	796	180
AE 0921	856	240
AE 0922	796	180
AE 0923	796	240
AE 0924	856	240
AE 0925	976	360

(1) IP 54 floor-standing enclosure with separate air flows
(2) Option: air conditioning

Installation recommendations

The derating curves for the drive nominal current (In) are dependent on the temperature and switching frequency.
For intermediate temperatures, interpolate between 2 curves.

Note: *The drive will reduce the switching frequency automatically in the event of excessive temperature rise.*

Derating curves for ATV 71EXS5D90N4…EXS5C50N4, ATV 71EXS5D90N…EXS5C13N, ATV 71EXS5C11Y…EXS5C16Y *(1)*

ATV 71EXS5D90N4… EXS5C50N4

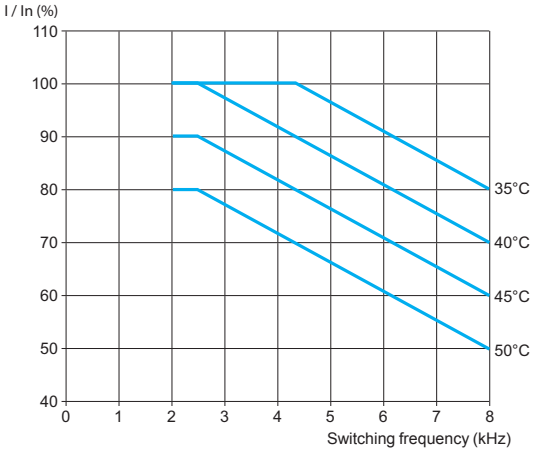

ATV 71EXS5D90N, ATV 71EXS5C11Y

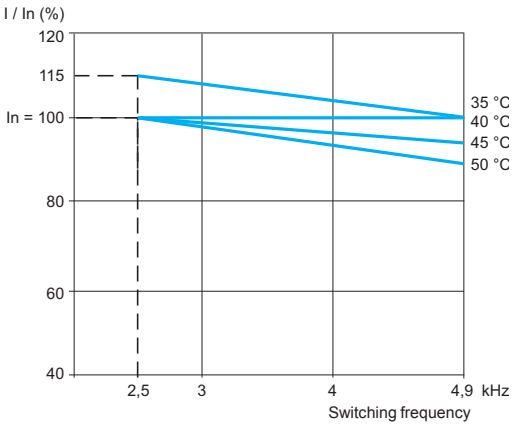

ATV 71EXS5C11N, ATV 71EXS5C13Y

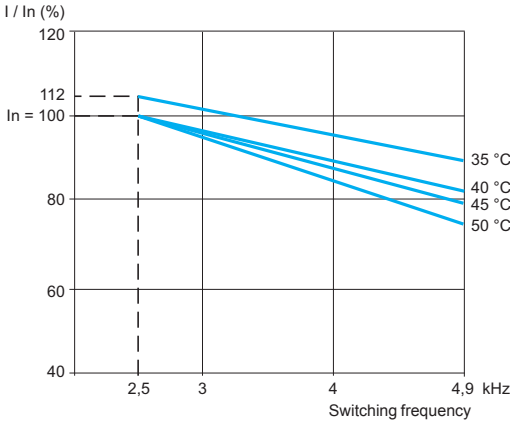

ATV 71EXS5C13N, ATV 71EXS5C16Y

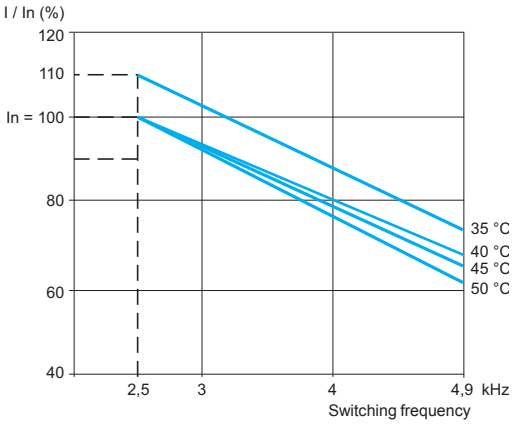

(1) The temperatures shown correspond to the temperature of the air entering the enclosure.

Derating curves for ATV 71EXS5C16N…EXS5C50N, ATV 71EXS5C20Y…EXS5C63Y *(1)*

ATV 71EXS5C16N, ATV 71EXS5C20Y

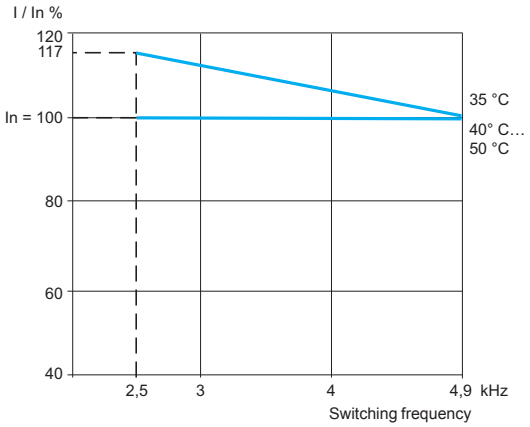

ATV 71EXS5C20N, ATV 71EXS5C25Y

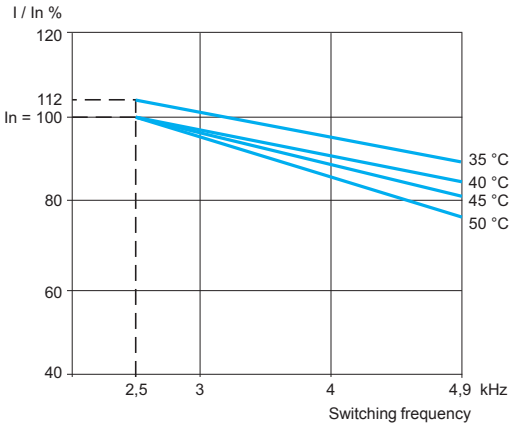

ATV 71EXS5C25N, ATV 71EXS5C31Y

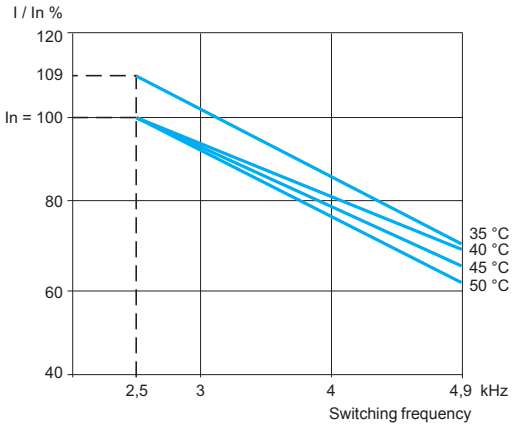

ATV 71EXS5C31N, ATV 71EXS5C40Y

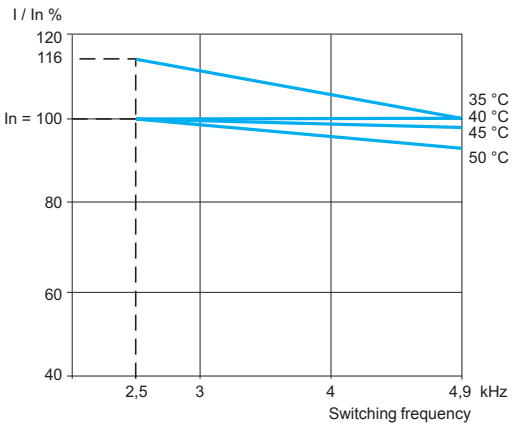

ATV 71EXS5C40N, ATV 71EXS5C50Y

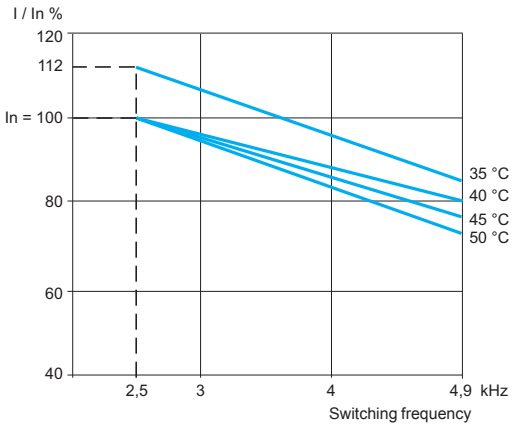

ATV 71EXS5C50N, ATV 71EXS5C63Y

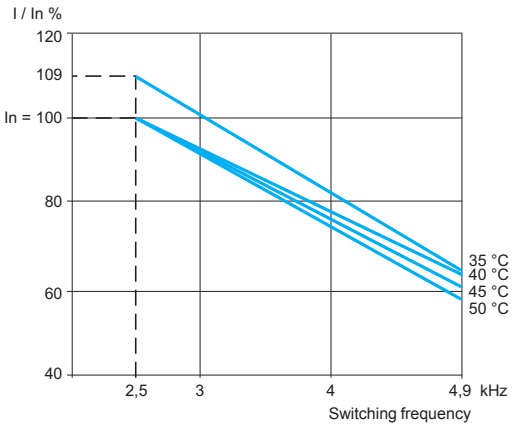

(1) The temperatures shown correspond to the temperature of the air entering the enclosure.

Variable speed drives

Altivar 71

IP 54 floor-standing enclosure with separate air flows

IP 54 floor-standing enclosure with separate air flows

ATV 71EXS5D90N4...EXS5C31N4, ATV 71EXS5D90N...EXS5C31N, ATV 71EXS5C11Y...EXS5C31Y

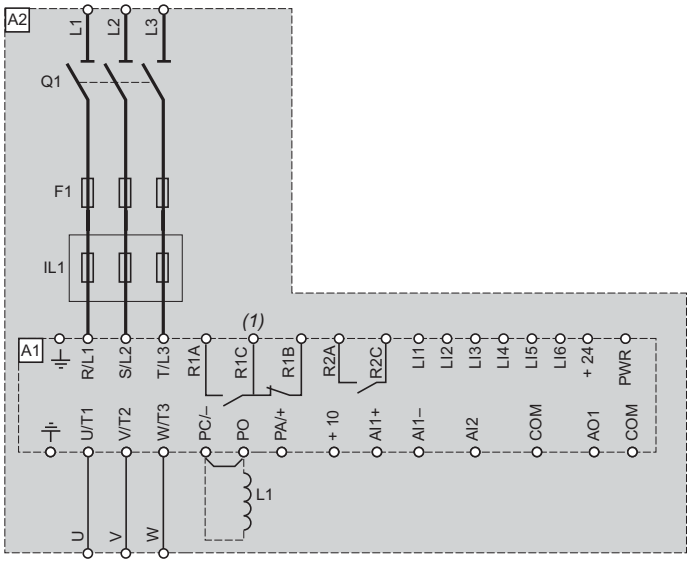

Reference	Description
A1	ATV 71 drive, see pages 23 and 25
A2	IP 54 floor-standing enclosure with separate air flows ATV 71EXS5, see page 86
F1	Fast-acting semi-conductor fuse
IL1	Line choke for ATV 71EXS5●●●N and ATV 71EXS5●●●Y
L1	DC choke for ATV 71EXS5●●●N4
Q1	Switch

ATV 71EXS5C40N4, EXS5C50N4, ATV 71EXS5C40N, EXS5C50N, ATV 71EXS5C40Y...EXS5C63Y

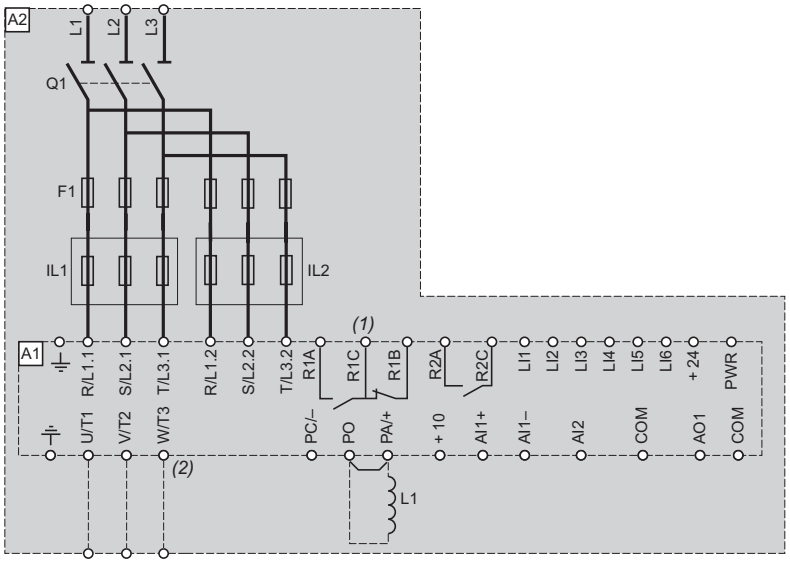

Reference	Description
A1	ATV 71 drive, see pages 23 and 25
A2	IP 54 floor-standing enclosure with separate air flows ATV 71EXS5, see page 86
F1	Fast-acting semi-conductor fuse
IL1, IL2	Line chokes for ATV 71EXS5●●●N and ATV 71EXS5●●●Y
L1	DC choke for ATV 71EXS5●●●N4
Q1	Switch

(1) Fault relay contacts. For remote signalling of drive status.
(2) Only for ATV 71EXS5●●●N and ATV 71EXS5●●●Y.

Variable speed drives

Altivar 71

IP 54 floor-standing enclosure with separate air flows

Options common to all drives

Remote control terminals X12 - VW3 AE 1201

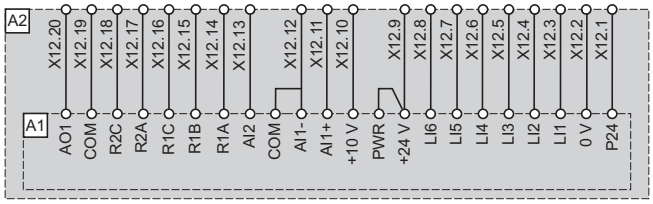

Reference	Description
A1	ATV 71 drive, see pages 23 and 25
A2	IP 54 floor-standing enclosure with separate air flows ATV 71EXS5, see page 86

Remote option card terminals X13 - VW3 AE 1202

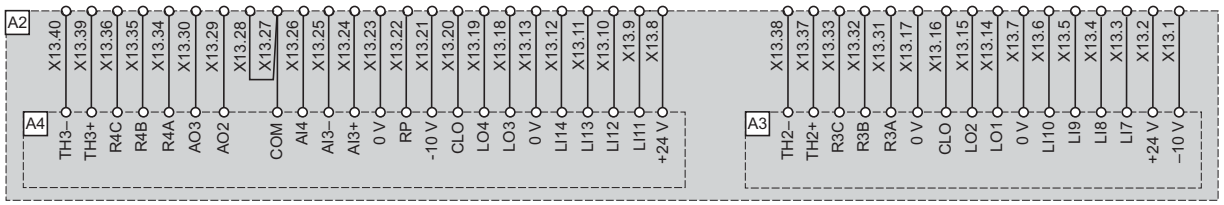

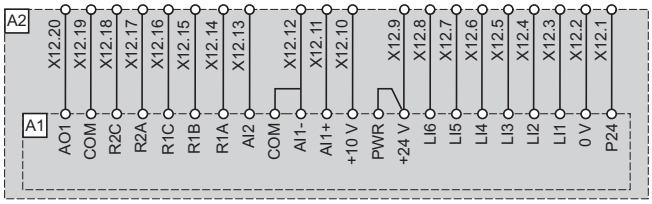

Reference	Description
A1	ATV 71 drive, see pages 23 and 25
A2	IP 54 floor-standing enclosure with separate air flows ATV 71EXS5, see page 86
A3	I/O option card VW3 A3E 201, see page 87
A4	I/O option card VW3 A3E 202, see page 87

Variable speed drives

Altivar 71

IP 54 floor-standing enclosure with separate air flows

Options common to all drives (continued)

External source terminals 230 V ∼ - VW3 AE 1301

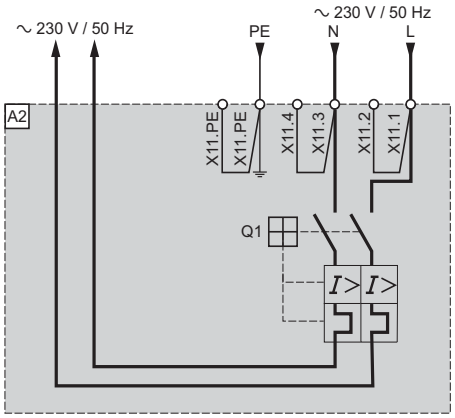

Reference	Description
A2	IP 54 floor-standing enclosure with separate air flows ATV 71EXS5, see page 86
Q1	6 A circuit-breaker
X11	External source terminals 230 V ∼

Additional 24 V ⎓ power supply - VW3 AE 1401

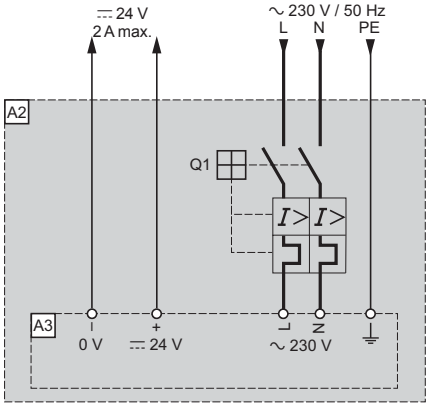

Reference	Description
A2	IP 54 floor-standing enclosure with separate air flows ATV 71EXS5, see page 86
A3	Additional 24 V ⎓ power supply
Q1	2 A circuit-breaker

External source terminals 24 V ⎓ - VW3 AE 1402

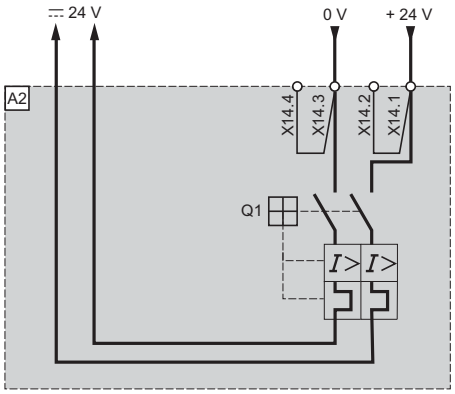

Reference	Description
A2	IP 54 floor-standing enclosure with separate air flows ATV 71EXS5, see page 86
Q1	2 A circuit-breaker
X14	External source terminals 24 V ⎓

Variable speed drives

Altivar 71

IP 54 floor-standing enclosure with separate air flows

Options common to all drives (continued)

Emergency stop button - VW3 AE 1501

Scheme conforming to standards EN 954-1 category 1, IEC/EN 61508 capacity SIL1, stopping category 0 in accordance with IEC/EN 60204-1

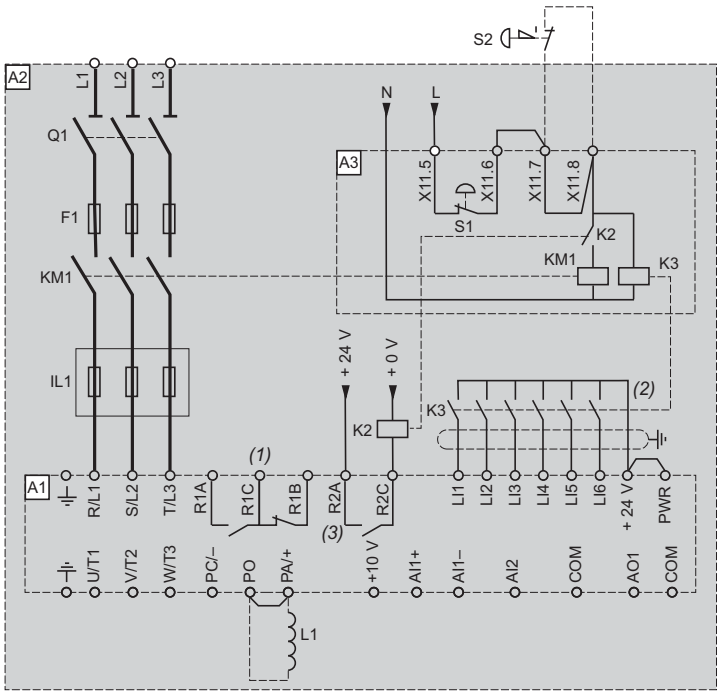

Reference	Description
A1	ATV 71 drives, see pages 23 and 25
A2	IP 54 floor-standing enclosure with separate air flows ATV 71EXS5, see page 86
A3	Emergency stop button
IL1	Line choke for ATV 71EXS5●●●N and ATV 71EXS5●●●Y
K2	Line contactor control contactor
K3	Logic input control contactor
KM1	Line contactor
L1	DC choke for ATV 71EXS5●●●N4
Q1	Switch
S1	Emergency stop button mounted on enclosure door
S2	Emergency stop button

(1) Fault relay contacts. For remote signalling of drive status.
(2) Connection of the common for the logic inputs depends on the positioning of the SW1 switch: see schemes on page 227.
(3) Relay logic output R2A must be assigned to the "Line contactor" parameter.

Variable speed drives

Altivar 71

IP 54 floor-standing enclosure with separate air flows

Options common to all drives (continued)

"Preventa type AC" fault relay - VW3 AE 1502

Scheme conforming to standards EN 954-1 category 3, IEC/EN 61508 capacity SIL 2, stopping category 0 in accordance with IEC/EN 60204-1

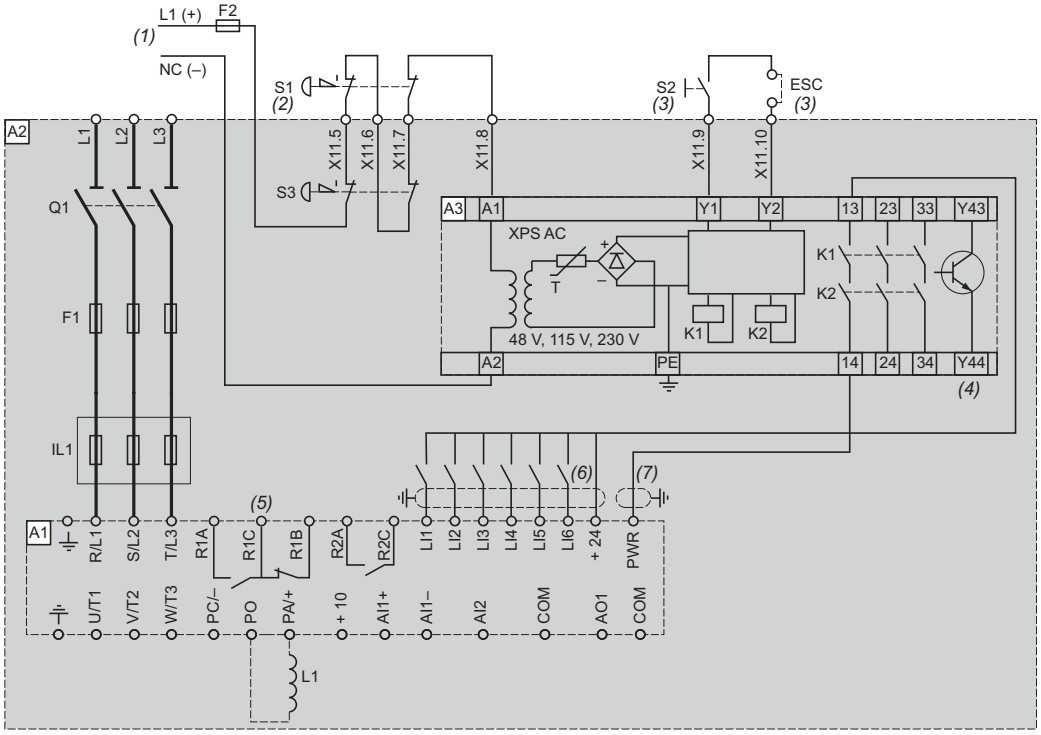

Reference	Description
A1	ATV 71 drive, see pages 23 and 25
A2	IP 54 floor-standing enclosure with separate air flows ATV 71EXS5, see page 86
A3	Preventa XPS AC safety module for monitoring emergency stops and switches. One safety module can manage the "Power Removal" function for several drives on the same machine. In this case, the PWR terminal on each drive must be connected to the + 24 V via the safety contacts on the XPS AC module. These contacts are independent for each drive.
F1	Fast-acting semi-conductor fuse
F2	Fuse
IL1	Line choke for ATV 71EXS5●●●N and ATV 71EXS5●●●Y
L1	DC choke for ATV 71EXS5●●●N4
Q1	Switch
S1	Emergency stop button with 2 contacts
S2	XB4 B or XB5 A pushbutton
S3	Emergency stop button with 2 contacts, mounted on enclosure door

(1) Power supply: 24 V ⎓, 230 V ∿.
(2) Requests freewheel stopping of the movement and activates the "Power Removal" safety function.
(3) S2: resets the XPS AC module on power-up or after an emergency stop. ESC can be used to set external starting conditions.
(4) The logic output can be used to indicate that the machine is in a safe stop state.
(5) Fault relay contacts. For remote signalling of drive status.
(6) Connection of the common for the logic inputs depends on the positioning of the SW1 switch: see schemes on page 227.
(7) Standardized coaxial cable, type RG174/U according to MIL-C17 or KX3B according to NF C 93-550, external diameter 2.54 mm, maximum length 15 m. The cable shielding must be earthed.

Options common to all drives (continued)

"Preventa type ATE" fault relay - VW3 AE 1503

Scheme conforming to standards EN 954-1 category 3, IEC/EN 61508 capacity SIL 2, stopping category 1 in accordance with IEC/EN 60204-1

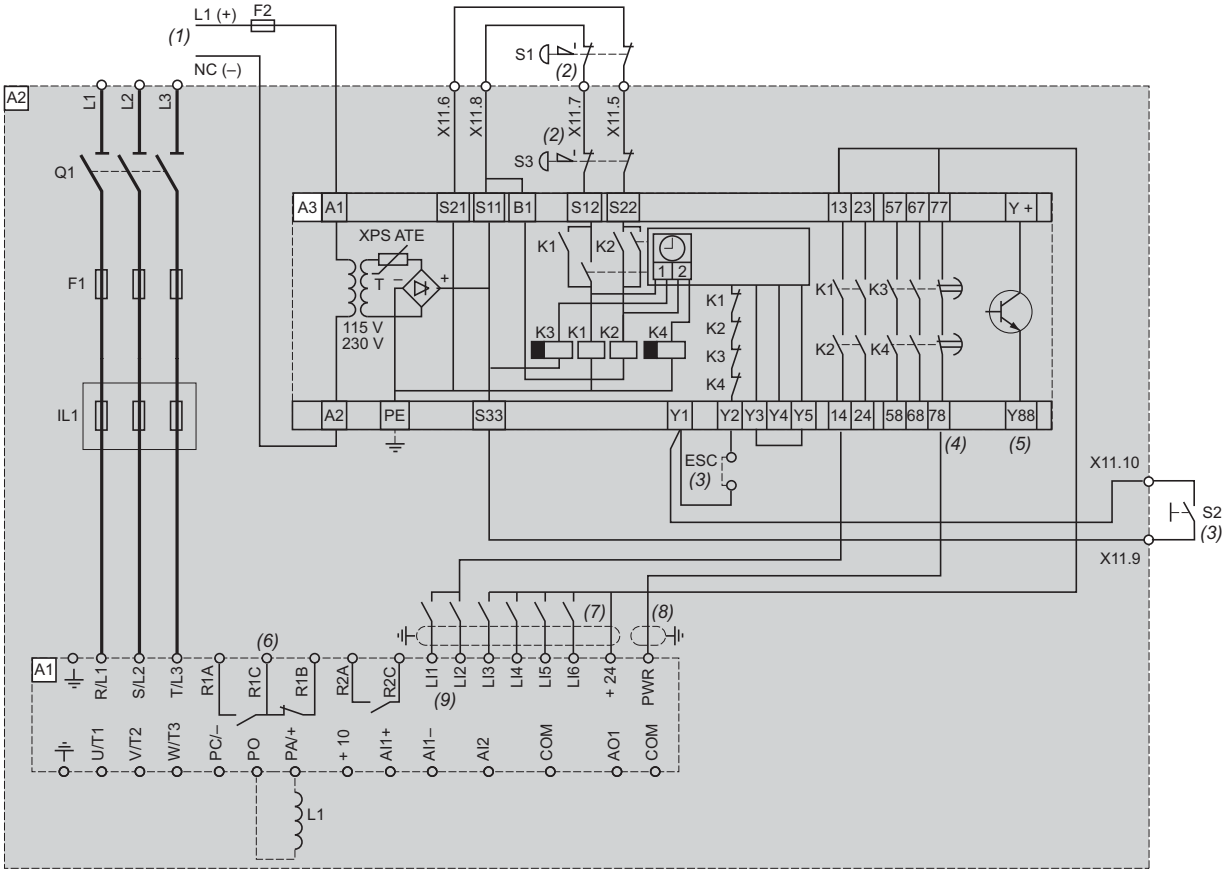

Reference	Description
A1	ATV 71 drive, see pages 23 and 25
A2	IP 54 floor-standing enclosure with separate air flows ATV 71EXS5, see page 86
A3	Preventa XPS ATE safety module for monitoring emergency stops and switches. One safety module can manage the "Power Removal" safety function for several drives on the same machine. In this case the time delay must be adjusted on the drive controlling the motor that requires the longest stopping time. In addition, the PWR terminal on each drive must be connected to the + 24 V via the safety contacts on the XPS ATE module. These contacts are independent for each drive.
F1	Fast-acting semi-conductor fuse
F2	Fuse
IL1	Line choke for ATV 71EXS5●●●N and ATV 71EXS5●●●Y
L1	DC choke for ATV 71EXS5●●●N4
Q1	Switch
S1	Emergency stop button with 2 contacts
S2	Run button
S3	Emergency stop button with 2 contacts, mounted on enclosure door

(1) Power supply: 24 V ⎓, 230 V ∿.
(2) Requests controlled stopping of the movement and activates the "Power Removal" safety function.
(3) S2: resets the XPS ATE module on power-up or after an Emergency stop. ESC can be used to set external starting conditions.
(4) For stopping times requiring more than 30 seconds in category 1, use a Preventa XPS AV safety module which can provide a maximum time delay of 300 seconds.
(5) The logic output can be used to indicate that the machine is in a safe state.
(6) Fault relay contacts. For remote signalling of drive status.
(7) Connection of the common for the logic inputs depends on the positioning of the SW1 switch: see schemes on page 227.
(8) Standardized coaxial cable, type RG174/U according to MIL-C17 or KX3B according to NF C 93-550, external diameter 2.54 mm, maximum length 15 m. The cable shielding must be earthed.
(9) Logic inputs LI1 and LI2 must be assigned to the direction of rotation: LI1 to forward direction and LI2 to reverse direction.

Options common to all drives (continued)

Enclosure lighting - VW3 AE 1601

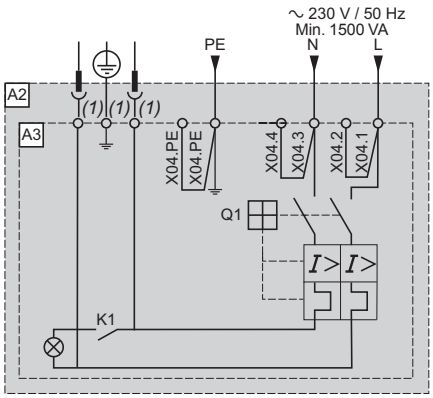

Reference	Description
A2	IP 54 floor-standing enclosure with separate air flows ATV 71EXS5, see page 86
A3	Enclosure lighting
K1	Door contact
Q1	6 A circuit-breaker

(1) European standard power socket available.

Additional electrical input isolation - VW3 AE 1901

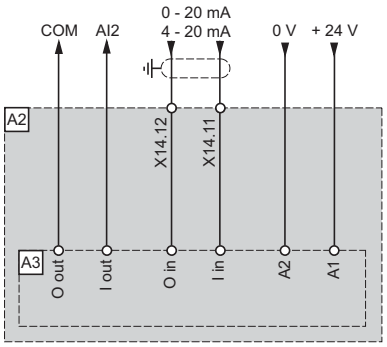

Reference	Description
A2	IP 54 floor-standing enclosure with separate air flows ATV 71EXS5, see page 86
A3	Additional electrical input isolation

Additional electrical output isolation - VW3 AE 1902

AO1 analog output option

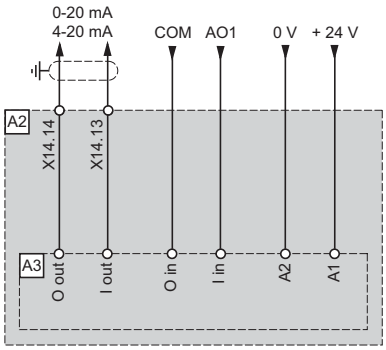

Reference	Description
A2	IP 54 floor-standing enclosure with separate air flows ATV 71EXS5, see page 86
A3	Additional electrical output isolation

AO2 analog output option

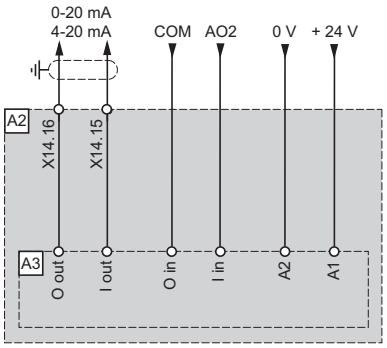

Reference	Description
A2	IP 54 floor-standing enclosure with separate air flows ATV 71EXS5, see page 86
A3	Additional electrical output isolation

AO3 analog output option

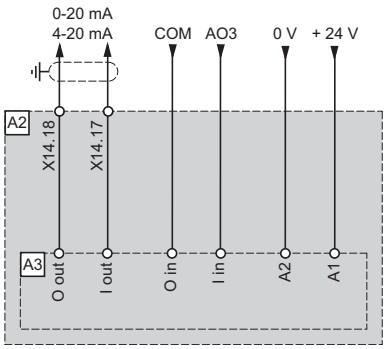

Reference	Description
A2	IP 54 floor-standing enclosure with separate air flows ATV 71EXS5, see page 86
A3	Additional electrical output isolation

Variable speed drives

Altivar 71

IP 54 floor-standing enclosure with separate air flows

Options common to all drives (continued)

PTC relay - VW3 AE 2001

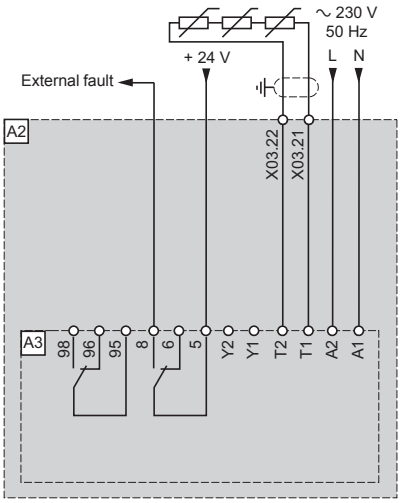

Reference	Description
A2	IP 54 floor-standing enclosure with separate air flows ATV 71EXS5, see page 86
A3	PTC relay

PTC relay with PTB (ATEX) certification *(1)* - VW3 AE 2002

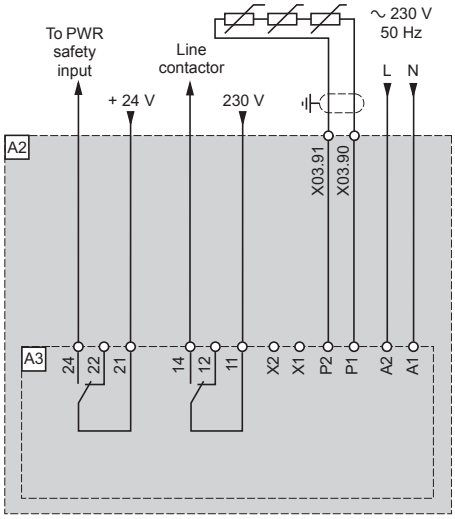

Reference	Description
A2	IP 54 floor-standing enclosure with separate air flows ATV 71EXS5, see page 86
A3	PTC relay with PTB (ATEX) certification

(1) ATEX: see pages 220 and 221.

Relay for PT100 for motor winding - VW3 AE 2003

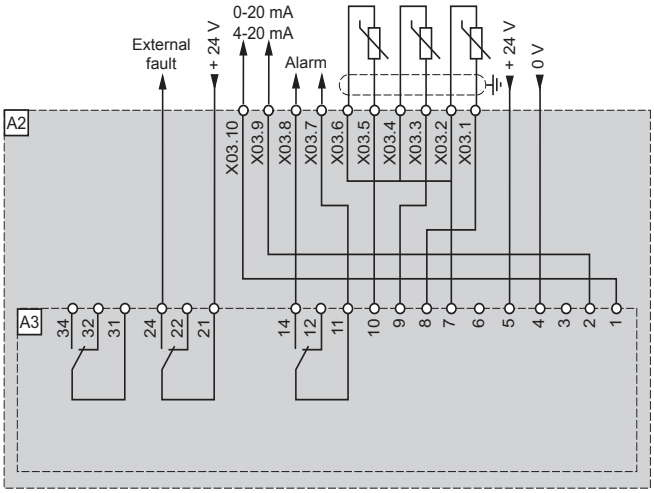

Reference	Description
A2	IP 54 floor-standing enclosure with separate air flows ATV 71EXS5, see page 86
A3	PT100 relay for motor winding

PT100 relay for motor bearings - VW3 AE 2004

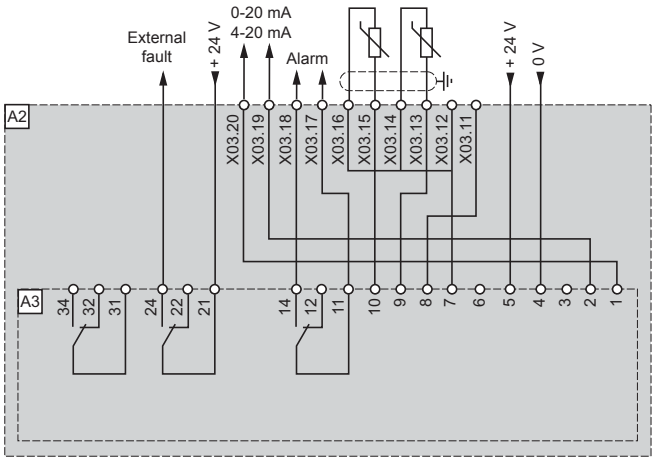

Reference	Description
A2	IP 54 floor-standing enclosure with separate air flows ATV 71EXS5, see page 86
A3	PT100 relay for motor bearings

Options common to all drives (continued)

Motor heater - VW3 AE 2101

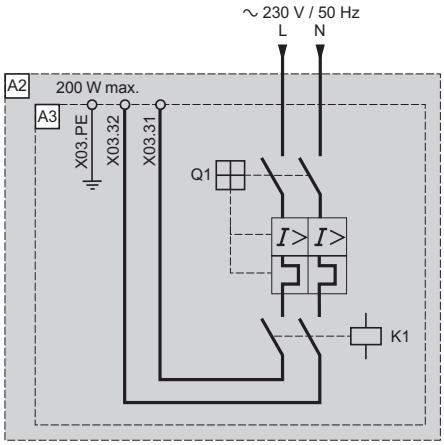

Reference	Description
A2	IP 54 floor-standing enclosure with separate air flows ATV 71EXS5, see page 86
A3	Motor heater
K1	Controlled by the drive or the line contactor. This control is activated if the drive is at "Stop" state
Q1	Circuit-breaker

Power supply circuit with protection for external fan - VW3 AE 2102

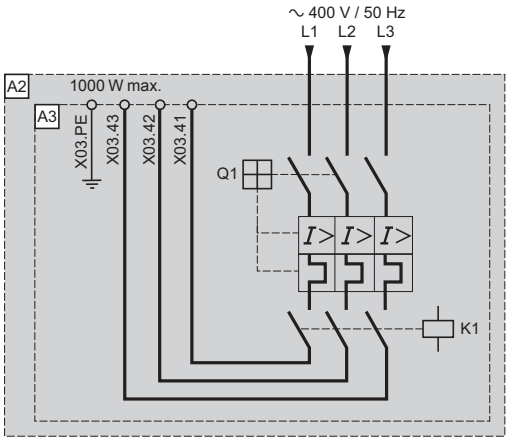

Reference	Description
A2	IP 54 floor-standing enclosure with separate air flows ATV 71EXS5, see page 86
A3	Power supply circuit with protection
K1	Controlled by the drive or the line contactor. This control is activated if the drive is at "RUN" state
Q1	Circuit-breaker

Relay for logic output - VW3 AE 2201

Logic output LO1

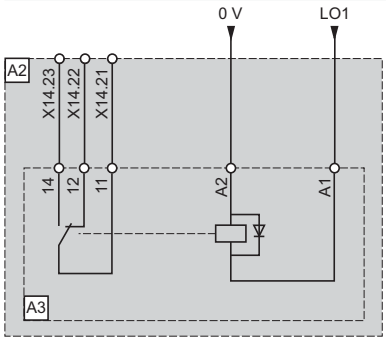

Reference	Description
A2	IP 54 floor-standing enclosure with separate air flows ATV 71EXS5, see page 86
A3	Relay for logic output

Logic output LO2

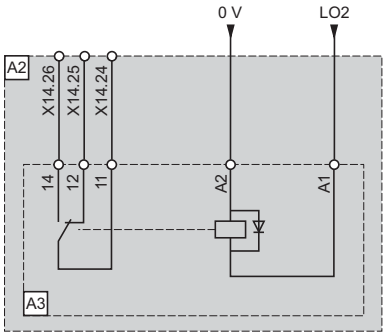

Reference	Description
A2	IP 54 floor-standing enclosure with separate air flows ATV 71EXS5, see page 86
A3	Relay for logic output

Logic output LO3

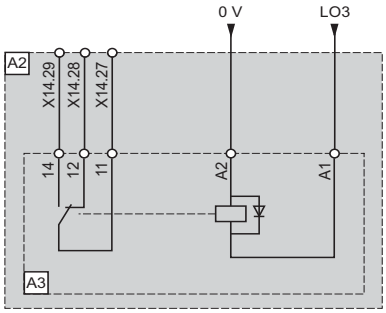

Reference	Description
A2	IP 54 floor-standing enclosure with separate air flows ATV 71EXS5, see page 86
A3	Relay for logic output

Logic output LO4

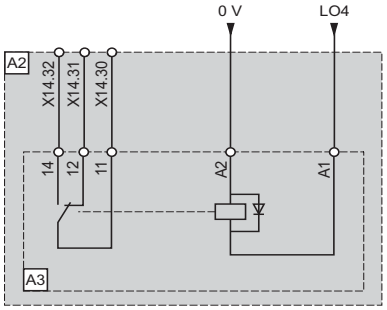

Reference	Description
A2	IP 54 floor-standing enclosure with separate air flows ATV 71EXS5, see page 86
A3	Relay for logic output

Options dependent on drive rating

Braking units - VW3 A7E 101…104

ATV 71EXS5C20N4…C50N4, ATV 71EXS5C16N…C50N and ATV 71EXS5C20Y…C63Y

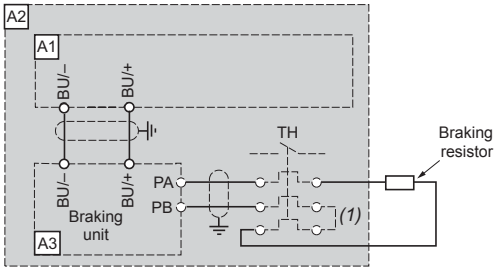

Reference	Description
A1	ATV 71 drive, see pages 23 and 25
A2	IP 54 floor-standing enclosure with separate air flows ATV 71EXS5, see page 86
A3	Braking unit, see pages 89 and 93
Braking resistor	See pages 136 and 137

(1) A thermal overload relay can be added. The contact on this relay must then be integrated in the control circuit.

Control transformer 500 VA or 800 VA ∿ - VW3 AE 0302, VW3 AE 0303

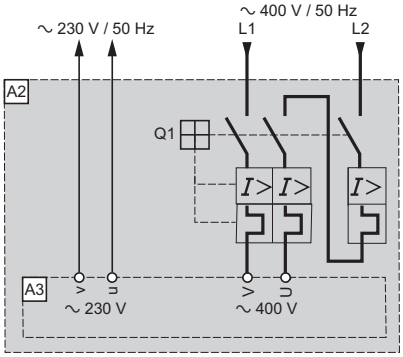

Reference	Description
A2	IP 54 floor-standing enclosure with separate air flows ATV 71EXS5D90N4…C50N4, see page 86
A3	Control transformer 500 VA ∿ or 800 VA ∿, see page 90
Q1	Circuit-breaker

Air conditioning VW3 AE 09●●

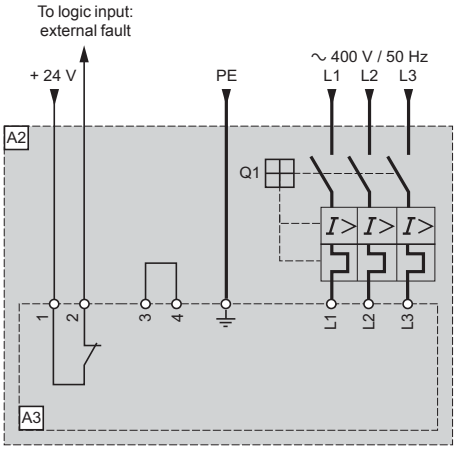

Reference	Description
A2	IP 54 floor-standing enclosure with separate air flows ATV 71EXS5D90N4…C50N4, see page 86
A3	Air conditioning, see page 92
Q1	Circuit-breaker

Remote graphic display terminal
(this terminal can be supplied with the drive or ordered separately)

This display terminal is attached to the front of the drive. It includes the integrated 7-segment display terminal for drives supplied without a graphic display terminal or for ATV 71HU22Y…HC63Y drives.
It can be:
- Used remotely in conjunction with the appropriate accessories (see below)
- Connected to several drives using multidrop link components (see page 109)

It is used:
- To control, adjust and configure the drive
- To display the current values (motor, input/output values, etc.)
- To save and download configurations; 4 configuration files can be saved

The terminal's maximum operating temperature is 60°C and it features IP 54 protection.

Description
1 Graphic display:
- 8 lines, 240 x 160 pixels
- Large digits that can be read from 5 m away
- Supports display of bar charts

2 Assignable function keys F1, F2, F3, F4:
- Dialogue functions: direct access, help screens, navigation
- Application functions: "Local Remote", preset speed

3 "STOP/RESET" key: local control of motor stop/fault reset
4 "RUN" key: local control of motor operation
5 Navigation button:
- Press: saves the current value (ENT)
- Turn ±: increases or decreases the value, or goes to the next or previous line.

6 "FWD/REV" key: reverses the direction of rotation of the motor
7 "ESC" key: aborts a value, a parameter or a menu to return to the previous selection

Note: *Keys 3, 4 and 6 can be used to control the drive directly.*

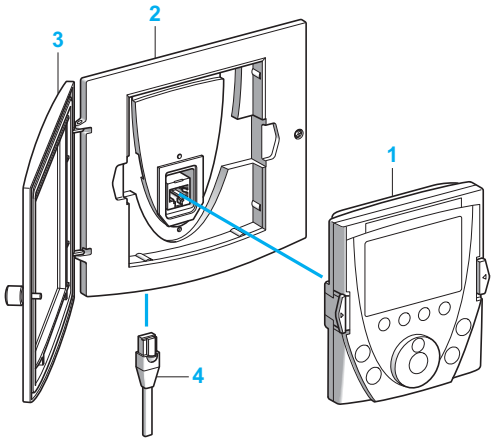

Reference

Description	No.	Reference	Weight kg
Remote graphic display terminal	1	**VW3 A1 101**	0.145

Remote graphic display terminal accessories

The following accessories are available:
- A remote mounting kit for mounting on an enclosure door with IP 54 degree of protection. It includes:
  - All the mechanical fittings
  - Fixing accessories
- A transparent door which attaches to the remote mounting mechanism to achieve IP 65 degree of protection
- A cable equipped with two RJ45 connectors so that the graphic display terminal can be connected to the Altivar 71 drive (1, 3, 5 or 10 m cable lengths available)
- An RJ45 female/female adapter for connecting the graphic display terminal VW3 A1 101 to the remote cable VW3 A1 104 R●●●

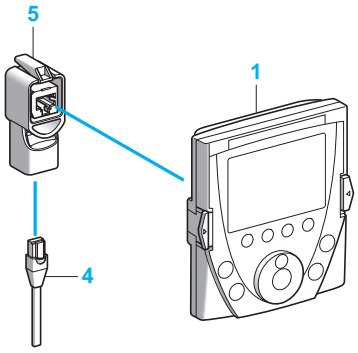

References

Description	No.	Length m	Degree of protection	Reference	Weight kg
Remote mounting kit *(1)*	2	–	IP 54	**VW3 A1 102**	0.150
Door *(2)*	3	–	IP 65	**VW3 A1 103**	0.040
Remote cables equipped with 2 RJ45 connectors	4	1	–	**VW3 A1 104 R10**	0.050
	4	3	–	**VW3 A1 104 R30**	0.150
	4	5	–	**VW3 A1 104 R50**	0.250
	4	10	–	**VW3 A1 104 R100**	0.500
RJ45 female/ female adapter	5	–	–	**VW3 A1 105**	0.010

(1) In this case, use a remote connecting cable VW3 A1 104 R●●●, which must be ordered separately (see above).
(2) To be mounted on remote mounting kit VW3 A1 102 (for mounting on an enclosure door), which must be ordered separately (see above).

Dimensions:
page 204

Variable speed drives

Altivar 71

Options: dialogue

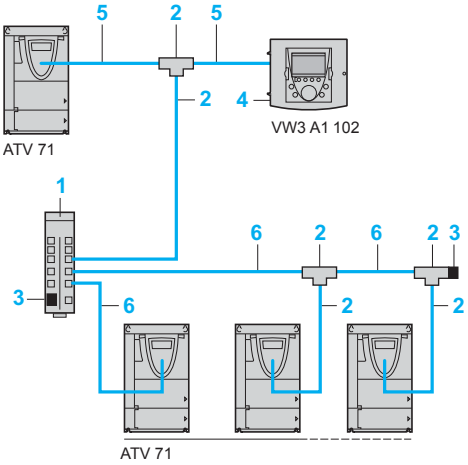

Example of connection via multidrop link

Multidrop link components

These components enable a graphic display terminal to be connected to several drives via a multidrop link. This multidrop link is connected to the Modbus terminal port on the front of the drive.

Connection accessories

Description		No.	Sold in lots of	Unit reference	Weight kg
Modbus splitter block 10 RJ45 connectors and 1 screw terminal		1	–	**LU9 GC3**	0.500
Modbus T-junction boxes	With integrated cable (0.3 m)	2	–	**VW3 A8 306 TF03**	–
	With integrated cable (1 m)	2	–	**VW3 A8 306 TF10**	–
Modbus line terminator	For RJ45 connector R = 120 W, C = 1 nF	3	2	**VW3 A8 306 RC**	–
Remote mounting kit	For graphic display terminal VW3 A1 101	4	–	**VW3 A1 102**	0.150

Connecting cables
(equipped with 2 RJ45 connectors)

Used for	No.	Length m	Reference	Weight kg
Remote operation of the Altivar 71 drive and the graphic display terminal VW3 A1 101	5	1	**VW3 A1 104 R10**	0.050
		3	**VW3 A1 104 R30**	0.150
		5	**VW3 A1 104 R50**	0.250
		10	**VW3 A1 104 R100**	0.500
Modbus bus	6	0.3	**VW3 A8 306 R03**	0.025
		1	**VW3 A8 306 R10**	0.060
		3	**VW3 A8 306 R30**	0.130

535270

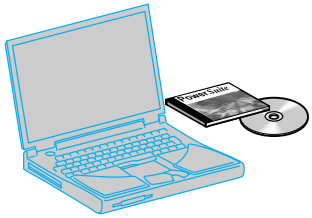

PowerSuite software workshop

PowerSuite software workshop

The PowerSuite software workshop offers the following benefits:
- Messages can be displayed in plain text in several languages (English, French, German, Italian and Spanish)
- Work can be prepared in the design office without having to connect the drive to the PC
- Configurations and settings can be saved to floppy disk or hard disk and downloaded to the drive
- Print facility
- Altivar 58 or Altivar 58F files can be converted for transfer to an Altivar 71 drive
- Oscillograms can be displayed

See pages 302 to 305.

Dimensions:
page 204

Variable speed drives
Altivar 71
Option: Encoder interface cards

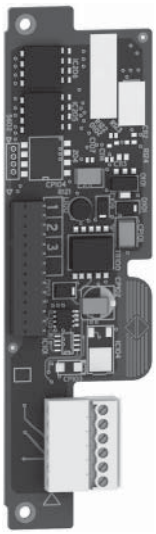

VW3 A3 401

Presentation

Encoder interface cards are used for Flux Vector Control operation with sensor (FVC mode) for asynchronous motors, or, for synchronous motors, Vector Control operation with speed feedback (FSY mode).
It therefore improves drive performance irrespective of the motor load state:
- Zero speed torque
- Accurate speed regulation
- Torque accuracy
- Shorter response times on a torque surge
- Improved dynamic performance in transient state

For asynchronous motors, in the other control modes (voltage vector control, voltage/frequency ratio), encoder interface cards improve static speed accuracy.

Depending on the model, encoder interface cards can also be used for machine safety, irrespective of the control type:
- Overspeed detection
- Load slipping detection

They can also transmit to the Altivar 71 a reference provided by the encoder input. This use is specific to synchronizing the speed of several drives.

These two functions are available for encoder interface cards VW3 A3 401 to VW3 A3 407 and VW3 A3 411.

The Altivar 71 drive cannot support more than one encoder interface card. It is inserted into a dedicated slot.

Six types of card are available depending on the encoder technology (incremental or absolute):
- RS 422 compatible differential outputs
- Open collector outputs (NPN)
- Push-pull outputs
- Resolver
- SinCos, SinCos Hiperface®, EnDat® or SSI
- RS 422 compatible differential outputs with encoder emulation (RS 422 ESIM)

These last three cards are available only with the following variable speed drives:
- ATV 71H●●●M3383
- ATV 71H●●●M3X383
- ATV 71H●●●N4383

The RS 422 ESIM (Encoder SIMulation) encoder interface card is used to indicate the position and speed of the motor to a motion controller via the ESIM output of the RS 422 interface.
It is also used to establish a master/slave relationship between two Altivar 71 drives.

Schemes:
page 230

Variable speed drives

Altivar 71

Option: Encoder interface cards

Characteristics

Encoder interface cards with RS422 compatible differential outputs

Type of card		VW3 A3 401		VW3 A3 402 *(1)*	
Power Supply (supplied by the card)	Voltage	5 V ⎓ (min. 5 V, max. 5.5 V)		15 V ⎓ (min. 15 V, max. 16 V)	
	Maximum current	200 mA		175 mA	
		Short-circuit and overload protection			
Maximum cable length		50 m		100 m	
Maximum operating frequency		300 kHz			
Input signals		A, $\overline{A}$, B, $\overline{B}$			
	Impedance	440 Ω			
Number of pulses/encoder revolution	ATV 71H●●●M3, M3X, N4	5000 maximum			
	ATV 71H●●●●●●383	10,000 maximum			
		The maximum high-speed frequency should not exceed 300 kHz.			
Encoder consumption		**100 mA at 4.5 V**	**200 mA at 4.5 V**	**100 mA at 8 V**	**175 mA at 8 V**
Minimum cross-section recommended for the conductors *(2)*	For a maximum cable length of 25 m	0.2 mm² (AWG 24)	0.5 mm² (AWG 20)	0.2 mm² (AWG 24)	
	For a maximum cable length of 50 m	0.5 mm² (AWG 20)	0.75 mm² (AWG 18)	0.2 mm² (AWG 24)	
	For a maximum cable length of 100 m	–	–	0.2 mm² (AWG 24)	
Type of encoder		**XCC 1●●●●●●●X, R, RN** *(3)*		**XCC 1●●●●●●●X** *(3)*	

Encoder interface card with open collector outputs

Type of card		VW3 A3 403		VW3 A3 404	
Power Supply (supplied by the card)	Voltage	12 V ⎓ (min. 12 V, max. 13 V)		15 V ⎓ (min. 15 V, max. 16 V)	
	Maximum current	175 mA			
		Short-circuit and overload protection			
Maximum cable length		500 m			
Maximum operating frequency		300 kHz			
Input signals		A, $\overline{A}$, B, $\overline{B}$/AB/A			
	Impedance	1 kΩ			
Number of pulses/encoder revolution	ATV 71H●●●M3, M3X, N4	5000 maximum			
	ATV 71H●●●●●●383	10,000 maximum			
		The maximum high-speed frequency should not exceed 300 kHz.			
Encoder consumption		**100 mA at 10 V**	**175 mA at 10 V**	**100 mA at 10 V**	**175 mA at 10 V**
Minimum cross-section recommended for the conductors *(2)*	For a maximum cable length of 100 m	0.2 mm² (AWG 24)	0.5 mm² (AWG 20)	0.2 mm² (AWG 24)	
	For a maximum cable length of 200 m	0.5 mm² (AWG 20)	0.75 mm² (AWG 18)	0.2 mm² (AWG 24)	
	For a maximum cable length of 500 m	1 mm² (AWG 17)	1.5 mm² (AWG 15)	0.5 mm² (AWG 20)	

Encoder interface card with push-pull outputs

Type of card		VW3 A3 405		VW3 A3 406		VW3 A3 407
Power Supply (supplied by the card)	Voltage	12 V ⎓ (min. 12 V, max. 13 V)		15 V ⎓ (min. 15 V, max. 16 V)		24 V ⎓ (min. 20 V, max. 30 V)
	Maximum current	175 mA				
		Short-circuit and overload protection				
Maximum cable length		500 m				
Maximum operating frequency		300 kHz				
Input signals		A, $\overline{A}$, B, $\overline{B}$/AB/A				
	Impedance	1 kΩ				1.6 kΩ
	State 0	If < 1.5 V				
	State 1	If > 7.7 V and < 13 V		If > 7.7 V and < 16 V		If > 11.5 V and < 25 V
Number of pulses/encoder revolution	ATV 71H●●●M3, M3X, N4	5000 maximum				
	ATV 71H●●●●●●383	10,000 maximum				
		The maximum high-speed frequency should not exceed 300 kHz.				
Encoder consumption		**100 mA at 10 V**	**175 mA at 10 V**	**100 mA at 10 V**	**175 mA at 10 V**	**100 mA at 14 V**
Minimum cross-section recommended for the conductors *(2)*	For a maximum cable length of 100 m	0.2 mm² (AWG 24)	0.5 mm² (AWG 20)	0.2 mm² (AWG 24)		
	For a maximum cable length of 200 m	0.5 mm² (AWG 20)	0.75 mm² (AWG 18)	0.2 mm² (AWG 24)		
	For a maximum cable length of 500 m	1 mm² (AWG 17)	1.5 mm² (AWG 15)	0.5 mm² (AWG 20)		0.2 mm² (AWG 24)
Type of encoder		**XCC 1●●●●●●●Y, K, KN** *(3)*				

(1) The VW3 A3 402 card ensures compatibility between Altivar 68F drive applications and Altivar 71 drive applications.
(2) Shielded cable containing 3 twisted pairs with a pitch of between 20 and 50 mm. Connect the shielding to earth at both ends.Minimum cross-section recommended for the conductors for a minimum encoder voltage in order to limit line voltage drops.
(3) To obtain the complete reference of the encoder, consult our "Global Detection" catalogue or our website "www.telemecanique.com".

Schemes:
page 230

Characteristics (continued)

Resolver encoder interface card (for drives ATV 71H●●●M3383, ATV 71H●●●M3X383 and ATV 71H●●●N4383)

Type of card		**VW3 A3 408**	
Excitation voltage		1.25…5.6 V rms with current of 50 mA max.	
Secondary voltage		Set at 1 V rms for an excitation voltage of 1.25…5.6 V rms	
Excitation frequency		4, 8 or 12 kHz, adjustable according to the encoder. By default, 8 kHz	
Speed feedback resolution		12 bits, 2^{12} maximum (4092), for 360 electrical degrees	
Accuracy		± 1 bit	
Number of encoder poles		2, 4, 6 or 8. The number of motor poles must be an integer multiple of the number of encoder poles	
Transformation ratio (Turn ratio)		4:1, 3:1, 2:1 and 1:1; detection of the ratio is automatic	
Number of pulses/encoder revolution		4096 maximum	
Maximum cable length		200 m	
Maximum motor speed according to the number of resolver encoder poles for a resolution of 12 bits			
Number of encoder poles		Maximum motor speed	Number of pulses/rev.
2		7500 rpm	4096
4		3750 rpm	4096
6		2500 rpm	4096
8		1875 rpm	4096
Maximum speed of the motor combined with a 2-pole resolver encoder for a resolution of 12 bits			
Number of motor poles		Maximum motor speed	Number of pulses/rev.
2		7500 rpm	4096
4		3750 rpm	2048
6		2500 rpm	1024
8		1875 rpm	512
Encoder consumption		**30 mA**	**50 mA**
Minimum cross-section recommended for the conductors *(1)*	For a maximum cable length of 25 m	0.2 mm² (AWG 24)	
	For a maximum cable length of 50 m	0.2 mm² (AWG 24)	0.5 mm² (AWG 20)
	For a maximum cable length of 100 m	0.5 mm² (AWG 20)	
	For a maximum cable length of 200 m	0.75 mm² (AWG 18)	1 mm² (AWG 16)

Universal encoder interface card with SinCos, SinCos Hiperface®, EnDat® or SSI output (for drives ATV 71H●●●M3383, ATV 71H●●●M3X383 and ATV 71H●●●N4383)

Type of card		**VW3 A3 409**		
Power Supply (supplied by the card)	Voltage	5 V (min. 5 V, max. 5.5 V)	8 V (min. 8 V, max. 8.5 V)	12 V (min. 12 V, max. 12.5 V)
	Maximum current	200 mA		
		Short-circuit and overload protection		
Maximum cable length		50 m		
Speed feedback resolution		2^{13} maximum (8192)		
Clock frequency		500 kHz fixed		
SinCos output	Number of SinCos lines	10,000 maximum		
SinCos Hiperface® output	Number of SinCos lines	10,000 maximum		
EnDat® output	Type	EnDat 2.1		
	Frame size	25 bits maximum		
	Number of bits per encoder revolution	Autoconfigured		
	Number of bits for the encoder revolution number	Autoconfigured		
SSI output	Coding keys	Gray or binary configurable		
	Parity	Configurable with no parity, odd parity or even parity		
	Frame size	Configurable from 10 to 27 bits		
	Number of bits per encoder revolution	Configurable from 10 to 25 bits		
	Number of bits for the encoder revolution number	Configurable from 0 to 15 bits		
Encoder consumption		**100 mA at 4.75 V, 7.75 V or 14.75 V**	**200 mA at 4.75 V, 7.75 V or 14.75 V**	
Minimum cross-section recommended for the conductors *(1)*	For a maximum cable length of 25 m	0.5 mm² (AWG 20)	1 mm² (AWG 17)	
	For a maximum cable length of 50 m	0.75 mm² (AWG 18)	1.5 mm² (AWG 15)	

(1) Shielded cable containing 3 twisted pairs with a pitch of between 20 and 50 mm. Connect the shielding to earth at both ends. Minimum cross-section recommended for the conductors for a minimum encoder voltage in order to limit line voltage drops.

Characteristics (continued)

Encoder interface card with RS 422 compatible differential outputs with encoder emulation (RS 422 ESIM) (for drives ATV 71H●●●M3383, ATV 71H●●●M3X383 and ATV 71H●●●N4383)

Type of card		**VW3 A3 411**		
Power Supply (supplied by the card)	Voltage	5 V (min. 5 V, max. 5.5 V)	15 V (min. 15 V, max. 16 V)	
	Maximum current	200 mA		
		Short-circuit and overload protection		
Maximum cable length		50 m	100 m	
Maximum operating frequency		300 kHz		
Input signals (RS 422)		A, $\overline{A}$, B, $\overline{B}$, Z, $\overline{Z}$, adjustable by switch		
	Impedance	440 Ω		
Output signals		A $\overline{A}$/ A $\overline{A}$ B $\overline{B}$/A $\overline{A}$ B $\overline{B}$ Z $\overline{Z}$		
	Ratio	1, 1/2, 1/4, 1/8, 1/16, 1/32 or 1/64, adjustable by switch		
Number of pulses/encoder revolution		10,000 maximum		
Consumption of the encoder with 5 V supply		**50 mA at 4.75 V**	**100 mA at 4.75 V**	**200 mA at 4.75 V**
Minimum cross-section recommended for the conductors *(1)*	For a maximum cable length of 25 m	0.2 mm² (AWG 24)	0.5 mm² (AWG 20)	1 mm² (AWG 17)
	For a maximum cable length of 50 m	0.5 mm² (AWG 20)	0.75 mm² (AWG 18)	1.5 mm² (AWG 15)
	For a maximum cable length of 100 m	0.75 mm² (AWG 18)	1.5 mm² (AWG 15)	–
	For a maximum cable length of 200 m	1.5 mm² (AWG 15)	–	–
Consumption of the encoder with 15 V supply		**50 mA at 14.75 V**	**100 mA at 14.75 V**	**200 mA at 14.75 V**
Minimum cross-section recommended for the conductors *(1)*	For a maximum cable length of 25 m	0.2 mm² (AWG 24)	0.2 mm² (AWG 24)	0.5 mm² (AWG 20)
	For a maximum cable length of 50 m	0.2 mm² (AWG 24)	0.5 mm² (AWG 20)	0.75 mm² (AWG 18)
	For a maximum cable length of 100 m	0.5 mm² (AWG 20)	0.75 mm² (AWG 18)	1.5 mm² (AWG 15)
	For a maximum cable length of 200 m	1 mm² (AWG 17)	1.5 mm² (AWG 15)	–
	For a maximum cable length of 300 m	1.5 mm² (AWG 15)	–	–

References *(2)*

Description	Voltage V	Reference	Weight kg
Encoder interface cards with RS 422 compatible differential outputs	5	**VW3 A3 401**	0.200
	15	**VW3 A3 402**	0.200
Encoder interface cards with open collector outputs	12	**VW3 A3 403**	0.200
	15	**VW3 A3 404**	0.200
Encoder interface cards with push-pull outputs	12	**VW3 A3 405**	0.200
	15	**VW3 A3 406**	0.200
	24	**VW3 A3 407**	0.200
Resolver encoder interface card	1.25…5.6	**VW3 A3 408**	0.200
Universal encoder interface card with SinCos, SinCos Hiperface®, EnDat® or SSI output	5, 8 or 12	**VW3 A3 409**	0.200
Encoder interface card with RS 422 compatible differential outputs with encoder emulation (RS 422 ESIM)	5 or 15	**VW3 A3 411**	0.200

(1) Shielded cable containing 3 twisted pairs with a pitch of between 20 and 50 mm. Connect the shielding to earth at both ends.Minimum cross-section recommended for the conductors for a minimum encoder voltage in order to limit line voltage drops.
2) The Altivar 71 drive cannot support more than one encoder interface card. Consult the summary tables of possible drive, option and accessory combinations, see pages 176 to 187.

Schemes:
page 230

Variable speed drives

Altivar 71

Option: I/O extension cards

Presentation

532728

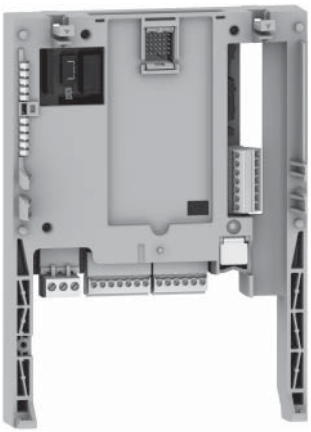

VW3 A3 202

Altivar 71 drives can be specifically adapted to particular application areas by installing I/O extension cards.

Two models are available:

■ Card with logic I/O featuring:
- □ 1 relay logic output ("C/O" contact)
- □ 4 x 24 V ⎓ positive or negative logic inputs
- □ 2 x 24 V ⎓ open collector positive or negative logic outputs
- □ 1 input for PTC probes

■ Card with extended I/O featuring:
- □ 1 differential current analog input 0...20 mA
- □ 1 software-configurable voltage (0...10 V ⎓) orcurrent (0...20 mA) analog input
- □ 2 software-configurable voltage (± 10 V, 0...10 V ⎓) or current (0...20 mA) analog outputs
- □ 1 relay logic output
- □ 4 x 24 V ⎓ positive or negative logic inputs
- □ 2 x 24 V ⎓ open collector positive or negative logic outputs
- □ 1 input for PTC probes
- □ 1 frequency control input

Characteristics

Logic I/O card VW3 A3 201

Available internal supplies		Short-circuit and overload protection: ■ 1 x 24 V ⎓ supply (min. 21 V, max. 27 V), maximum current 200 mA for the complete drive and I/O extension card assembly ■ 1 x 10.5 V ⎓ (± 5%) supply for the reference potentiometer (1 to 10 kΩ), maximum current 10 mA
Configurable relay output	R3A, R3B, R3C	1 relay logic output, one "N/C" contact and one "N/O" contact with common point Minimum switching capacity: 3 mA for 24 V ⎓ Maximum switching capacity: ■ On resistive load (cos φ = 1): 5 A for 250 V ∿ or 30 V ⎓ ■ On inductive load (cos φ = 0.4 and L/R = 7 ms): 2 A for 250 V ∿ or 30 V ⎓ Electrical service life: 100,000 operations Maximum response time: 7 ms ± 0.5 ms
Logic inputs	LI7…LI10	4 programmable logic inputs, 24 V ⎓, compatible with level 1 PLC, IEC/EN 61131-2 standard Impedance 3.5 kΩ Maximum voltage: 30 V Multiple assignment makes it possible to configure several functions on one input Maximum sampling time: 2 ms ± 0.5 ms
	Positive logic (Source)	State 0 if ⩽ 5 V or logic input not wired, state 1 if ⩾ 11 V
	Negative logic (Sink)	State 0 if ⩾ 16 V or logic input not wired, state 1 if ⩽ 10 V
Logic outputs	LO1, LO2	2 x 24 V ⎓ logic outputs assignable as positive (Source) or negative (Sink) logic open collector type, compatible with level 1 PLC, standard IEC/EN 61131-2 24 V ⎓ internal or 24 V ⎓ external power supply (min. 12 V, max. 30 V) Maximum current: 200 mA Logic output common (CLO) isolated from other signals Maximum sampling time: 2 ms ± 0.5 ms The active state is software-configurable as is a delay for each switching operation
Input for PTC probes	TH1+/TH1-	1 input for a maximum of 6 PTC probes mounted in series: ■ Nominal value < 1.5 kΩ ■ Trip resistance 3 kΩ, reset value 1.8 kΩ ■ Short-circuit protection < 50 Ω This PTC probe input must never be used for protection of an ATEX motor in applications in a potentially explosive atmosphere *(1)*.
Maximum wire size and tightening torque for I/O		1.5 mm² (AWG 16) 0.25 Nm

(1) Consult the ATEX manual, available on our website "www.telemecanique.com".

Schemes :
page 229

Characteristics (continued)

Extended I/O card VW3 A3 202

Available internal supplies		Short-circuit and overload protection: ■ 1 x 24 V ⎓ supply (min. 21 V, max. 27 V), maximum current 200 mA for the complete drive and I/O extension card assembly ■ 1 x 10.5 V ⎓ (± 5%) supply for the reference potentiometer (1 to 10 kΩ), maximum current 10 mA
Analog inputs AI	AI3+/AI3-	1 X-Y mA differential current analog input by programming X and Y from 0 to 20 mA, with impedance 250 Ω Maximum sampling time: 5 ms ± 1 ms Resolution: 11 bits + 1 sign bit Accuracy: ± 0.6 % for a temperature variation of 60°C Linearity: ± 0.15 % of the maximum value
	AI4	1 software-configurable voltage or current analog input: ■ Voltage analog input, 0...10 V ⎓, impedance 30 kΩ (max. safe voltage 24 V) ■ X-Y mA current analog input by programming X and Y from 0 to 20 mA, with impedance 250 Ω Maximum sampling time: 5 ms ± 1 ms Resolution: 11 bits Accuracy: ± 0.6 % for a temperature variation of 60°C Linearity: ± 0.15 % of the maximum value
Analog outputs	AO2, AO3	2 software-configurable voltage or current analog outputs: ■ Voltage analog output, ± 10 V, 0...10 V ⎓, minimum load impedance 470 Ω ■ X-Y mA current analog output by programming X and Y from 0 to 20 mA, maximum load impedance 500 Ω Maximum sampling time: 5 ms ± 1 ms Resolution: 10 bits Accuracy: ± 1% for a temperature variation of 60°C Linearity: ± 0.2% of the maximum value
Configurable relay output	R4A, R4B, R4C	1 relay logic output, one "N/C" contact and one "N/O" contact with common point Minimum switching capacity: 3 mA for 24 V ⎓ Maximum switching capacity: ■ On resistive load (cos φ = 1): 5 A for 250 V ∿ or 30 V ⎓ ■ On inductive load (cos φ = 0.4 and L/R = 7 ms): 1.5 A for 250 V ∿ or 30 V ⎓ Electrical service life: 100,000 operations Maximum response time: 10 ms ± 1 ms
Logic inputs	LI11…LI14	4 programmable logic inputs, 24 V ⎓, compatible with level 1 PLC, IEC/EN 61131-2 standard Impedance 3.5 kΩ Maximum voltage: 30 V Multiple assignment makes it possible to configure several functions on one input Maximum sampling time: 5 ms ± 1 ms
	Positive logic (Source)	State 0 if ⩽ 5 V or logic input not wired, state 1 if ⩾ 11 V
	Negative logic (Sink)	State 0 if ⩾ 16 V or logic input not wired, state 1 if ⩽ 10 V
Logic outputs	LO3, LO4	2 x 24 V ⎓ logic outputs assignable as positive (Source) or negative (Sink) logic open collector type, compatible with level 1 PLC, standard IEC/EN 61131-2 Maximum voltage: 30 V Maximum current: 200 mA Logic output common (CLO) isolated from other signals Maximum sampling time: 5 ms ± 1 ms The active state is software-configurable as is a delay for each switching operation.
Input for PTC probes	TH2+/TH2-	1 input for a maximum of 6 PTC probes mounted in series: ■ Nominal value < 1.5 kΩ ■ Trip resistance 3 kΩ, reset value 1.8 kΩ ■ Short-circuit protection < 50 Ω This PTC probe input must never be used for protection of an ATEX motor in applications in a potentially explosive atmosphere *(1)*.
Frequency control input	RP	Frequency range: 0…30 kHz Cyclic ratio: 50 % ± 10 % Maximum sampling time: 5 ms ± 1 ms Maximum input voltage 30 V, 15 mA Add a resistor if the input voltage is greater than 5 V (510 Ω for 12 V, 910 Ω for 15 V, 1.3 kΩ for 24 V) State 0 if < 1.2 V, state 1 if > 3.5 V
Maximum wire size and tightening torque for I/O		1.5 mm² (AWG 16) 0.25 Nm

References

I/O extension cards *(2)*

Description	Reference	Weight kg
Logic I/O card	**VW3 A3 201**	0.300
Extended I/O card	**VW3 A3 202**	0.300

(1) Consult the ATEX manual, available on our website "www.telemecanique.com".
(2) The Altivar 71 cannot support more than one I/O card with the same reference.
Consult the summary tables of possible drive, option and accessory combinations, see pages 176 to 187.

Schemes :
page 229

Variable speed drives

Altivar 71

Option: "Controller Inside" programmable card

Presentation

The "Controller Inside" programmable card is used to adapt the variable speed drive to specific applications by integrating control system functions.

Various predefined, configurable applications are sold by Schneider Electric and its partners.
The PS 1131 software workshop for PC is used for programming and debugging new applications, quickly and in an open-ended manner (see page 119).
It is not possible to transfer the program from the card to the PC, as we need to protect our know-how.

A single "Controller Inside" programmable card can be fitted in the Altivar 71 drive. It can be combined with another option card (I/O extension or communication).
Consult the summary tables of possible drive, option and accessory combinations, see pages 176 to 187.

The "Controller Inside" programmable card has:
- 10 logic inputs, 2 of which can be used for 2 counters or 4 of which can be used for 2 incremental encoders
- 2 analog inputs
- 6 logic outputs
- 2 analog outputs
- A master port for the CANopen machine bus
- A PC port for programming with the PS 1131 software workshop

If the power consumption table does not exceed 200 mA, the "Controller Inside" programmable card can be powered by Altivar 71 drives. Otherwise, an external 24 V ⎓ power supply must be used.
The ATV 71W●●●N4A24 variable speed drives incorporate a 24 V ⎓ power supply, allowing additional consumption of 250 mA.

The "Controller Inside" programmable card can also use:
- The drive I/O
- The I/O extension card I/O
- The encoder interface card points counter
- The drive parameters (speed, current, torque, etc.)

532835

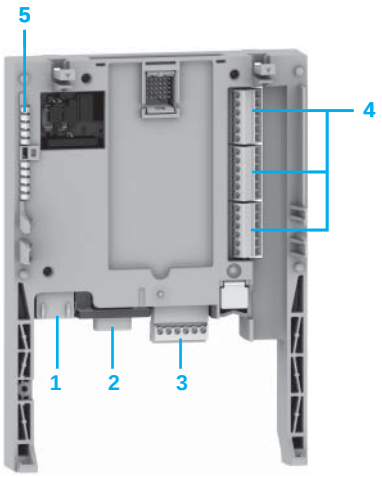

Description

1 RJ45 connector for connecting the PS 1131 software workshop via an RS 485 serial link.
Connection to the PC is via a cable and an RS 232/RS 485 converter included in the PowerSuite for PC connection kit, VW3 A8 106.

2 9-way male SUB-D connector for connection to the CANopen machine bus.

3 Connector with removable screw terminals, 6 contacts at intervals of 3.81 for the 24 V ⎓ power supply and 4 logic inputs.

4 3 connectors with removable screw terminals, 6 contacts at intervals of 3.81 for 6 logic inputs, 6 logic outputs, 2 analog inputs, 2 analog outputs and 2 commons.

5 5 LEDs, comprising:
- 1 to indicate the presence of the 24 V ⎓ power supply
- 1 to indicate a program execution fault
- 2 to indicate the CANopen machine bus communication status
- 1 controlled by the application program

Variable speed drives

Altivar 71

Option: "Controller Inside" programmable card

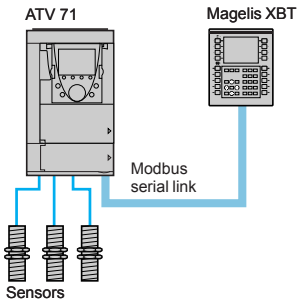

Independent machine with multiwire system

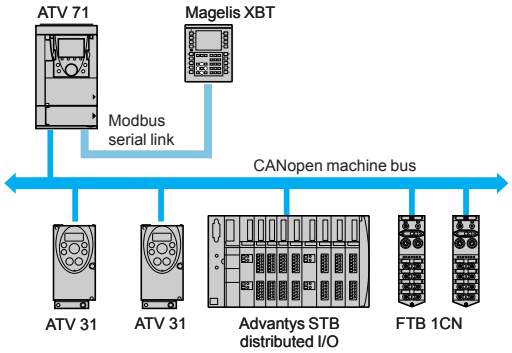

Independent machine with CANopen machine bus

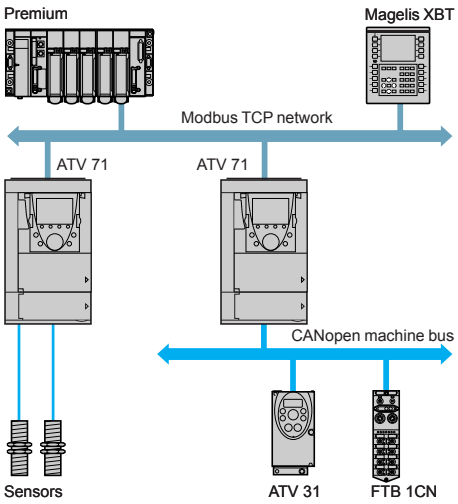

Modular machine with Modbus TCP network

Dialogue

Human-machine dialogue with the application programmed in the "Controller Inside" programmable card is possible using:

- The Altivar 71 graphic display terminal
- A Magelis industrial HMI terminal connected to the drive Modbus port
- A Magelis industrial HMI terminal connected to the Modbus TCP network (if the drive is equipped with a Modbus TCP communication card)

There is a dedicated graphic terminal menu for the "Controller Inside" programmable card. This menu can be customized by the card program according to the application.

Any industrial HMI terminal which supports the Modbus protocol can be used to display and modify the "Controller Inside" programmable card parameters. The Modbus server provides access to 2 Kwords (% MW, etc.) in the card.

Master CANopen communication

The master CANopen port on the "Controller Inside" programmable card can be used to extend the I/O capacity and to control other CANopen slave devices.

Communication with a PLC

The Altivar 71 drive, which is equipped with a "Controller Inside" programmable card, fits easily into complex architectures.
Regardless of which bus, network or serial link is being used (Modbus TCP, Modbus/Uni-Telway, Fipio, Modbus Plus, PROFIBUS DP, InterBus, etc.), the PLC can communicate with the "Controller Inside" programmable card and the drive. The periodic variables can still be configured as required.

Clock

A clock backed up by a lithium battery makes it possible to keep a log of events that have occurred. When the "Controller Inside" programmable card is installed in the drive, drive faults are automatically time and date-stamped without the need for any special programming.

Characteristics: page 118
Functions: pages 119 to 122
Schemes: page 231
References: page 123

Variable speed drives

Altivar 71

Option: "Controller Inside" programmable card

Electrical characteristics

Power supply	Voltage	**V**	⎓ (min. 19, max. 30)
Current consumption	Maximum	**A**	2
	No-load	**mA**	80
	Per logic output	**mA**	200 maximum *(1)*
Analog inputs	AI51, AI52		2 current analog inputs 0...20 mA, impedance 250 Ω Resolution: 10 bits Accuracy: ± 1% for a temperature variation of 60°C Linearity: ± 0.2% of the maximum value Common point for all the card I/O *(2)*
Analog outputs	AO51, AO52		2 current analog outputs 0...20 mA, impedance 500 Ω Resolution: 10 bits Accuracy: ± 1% for a temperature variation of 60°C Linearity: ± 0.2% of the maximum value Common point for all the card I/O *(2)*
Logic inputs	LI51…LI60		Ten 24 V ⎓ logic inputs, compatible with level 1 PLC, IEC/EN 61131-2 standard, 4 of which can be used for: ■ 1 counter and/or 1 incremental encoder ■ 2 counters Impedance 4.4 kΩ Maximum voltage: 30 V ⎓ Switching thresholds: State 0 if ⩽ 5 V or logic input not wired State 1 if ⩾ 11 V Common point for all the card I/O *(2)*
Logic outputs	LO51…LO56		Six 24 V ⎓ logic outputs, positive logic open collector type (source), compatible with level 1 PLC, IEC/EN 61131-2 standard Maximum switching voltage: 30 V Maximum current: 200 mA Common point for all the card I/O *(2)*
Connection of I/O	Type of contact		Screw at intervals of 3.81 mm²
	Maximum wire size	**mm²**	1.5 (AWG 16)
	Tightening torque	**Nm**	0.25
Lithium battery	Life		8 years approx.

Characteristics of the application program

Compiled program (saved in "flash" memory)	Maximum size	**Kb**	320
Data	Maximum size	**Kwords**	64
	Saved size (NVRAM)	**Kwords**	4
	Size accessible by Modbus	**Kwords**	2

Characteristics of the CANopen communication port

Structure	Connector	One 9-way male SUB-D connector
	Network management	Master
	Transmission speed	Configurable via the program: 50 kbps, 125 kbps, 250 kbps, 500 kbps or 1 Mbps
	Address (Node ID)	32 slaves maximum
Services	CANopen application layer	DS 301 V4.02
	Profile	DSP 405
	PDO	10 receive and transmit PDOs in total for each slave
	SDO	2 client SDOs per slave (1 read and 1 write). Block transfer.
	Error check	Node Guarding, producer and consumer Heartbeat
	Other services	Emergency, Boot-up, Sync
Diagnostics	Using LEDs	2 LEDs: "RU" and "ERROR", conforming to CIA DR303 version 1.0

(1) Otherwise, and external 24 V ⎓ power supply must be used.
(2) This common point is also the drive 0 V.

Presentation: page 116
Functions: pages 119 to 122
Schemes: page 231
References: page 123

Variable speed drives

Altivar 71

Option: "Controller Inside" programmable card

PS 1131 software workshop

The PS 1131 software workshop conforms to international standard IEC 61131-3 and includes all the functions for programming and setting up the "Controller Inside" programmable card.
It includes the configurator for CANopen.
It is designed for Microsoft Windows® 98, Microsoft Windows® NT 4.0, Microsoft Windows® Millennium, Microsoft Windows® 2000 Professional and Microsoft Windows® XP operating systems.

It benefits from the user-friendly interface associated with these operating systems:
- Pop-up menus
- Function blocks
- Online help

The PS 1131 software workshop is available in both English and German.

The programming and debugging tools can be accessed via the application browser. This provides the user with an overview of the program and quick access to all application components:
- Program editor
- Function blocks editor
- Variables editor
- Animation tables editor
- Runtime screens editor

Modular structured programming

The PS 1131 software workshop is used to structure an application into function modules consisting of sections (program code), animation tables and runtime screens. Each program section has a name and is programmed in one of the six available languages. To protect know-how or prevent any accidental modification, each section can be write-protected or read/write-protected.

Exporting/Importing function modules
It is possible to export all or part of the tree structure in function modules.

Program structure and execution of an application

The program structure is single-task. It consists of several subroutines.
Exchanges with the drive are performed by a function block available in the standard library.
Cycle execution can be either cyclic or periodic. A software watchdog, which can be configured between 100 and 500 ms by the user, monitors the cycle time.
A task can be synchronized with the drive main task to improve repeat accuracy in motion control applications.

Cyclic execution
Once each cycle ends, execution of a new cycle begins. Cycle execution must last for at least 5 ms.

Periodic execution
The program is executed periodically, and the period can be set by the user between 5 and 100 ms. Cycle execution must last for less than the defined period. The drive response in the event of the cycle time being exceeded can be managed by the program.

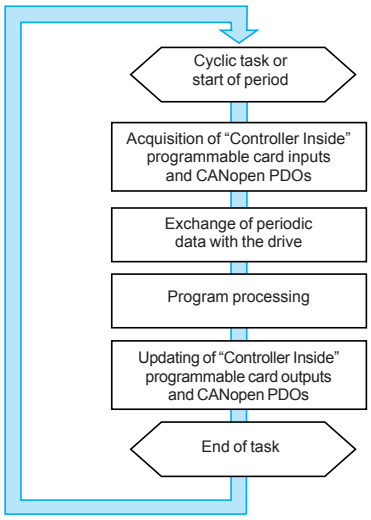

Example of cycle execution for the "Controller Inside" programmable card connected on a CANopen machine bus

Presentation: page 116
Characteristics: page 118
Schemes: page 231
References: page 123

Variable speed drives

Altivar 71

Option: "Controller Inside" programmable card

Programming languages

6 programming languages are available:

- Ladder Diagram (LD)
- Structured Text language (ST)
- Grafcet language (SFC)
- Instruction List language (IL)
- Function Block Diagram (FBD)
- Continuous Flow Chart (CFC)

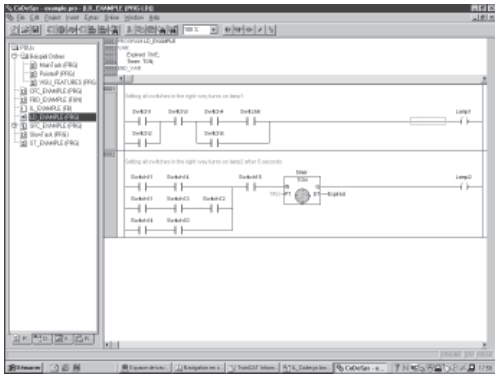

Example of Ladder Diagram language programming

Ladder Diagram (LD)

A Ladder Diagram program consists of a set of rungs executed sequentially.
A rung consists of several lines.
A line consists of several contacts and a coil.
The language objects can be entered and displayed as symbols or tags as required.
The Ladder Diagram editor enables the immediate call of entry help functions such as access to function libraries and access to the variables editor

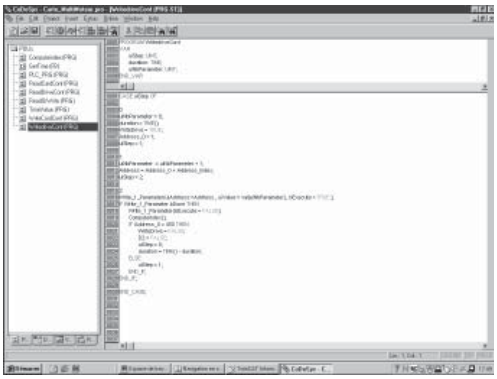

Example of Structured Text language programming

Structured Text (ST)

Structured Text language is a sophisticated algorithmic-type language which is particularly well suited to programming complex arithmetical functions, manipulating tables, message handling, etc.
Structured Text language enables direct transcription of an analysis based on a flow chart, and is organized in statements.

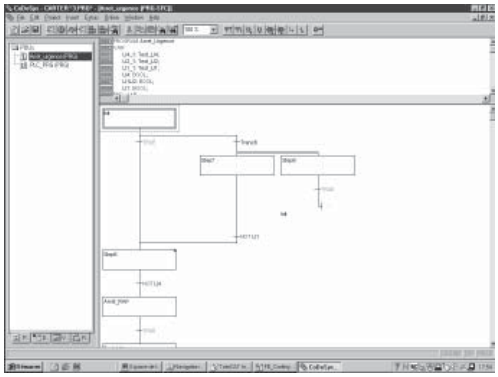

Example of Grafcet language programming

Grafcet language (SFC)

Grafcet language is used to describe the sequential part of the control system in a simple, graphic way. It corresponds to the "Sequential Function Chart" (SFC) language described in standard IEC/EN 61131-3.
Programs written in Grafcet (SFC) language consist of:

- Macro-steps which are groups of steps and transitions
- Steps relating to the actions to be performed
- Transitions relating to the conditions (transition conditions)
- Directed links connecting the steps and transitions

Presentation: page 116
Characteristics: page 118
Schemes: page 231
References: page 123

Variable speed drives

Altivar 71

Option: "Controller Inside" programmable card

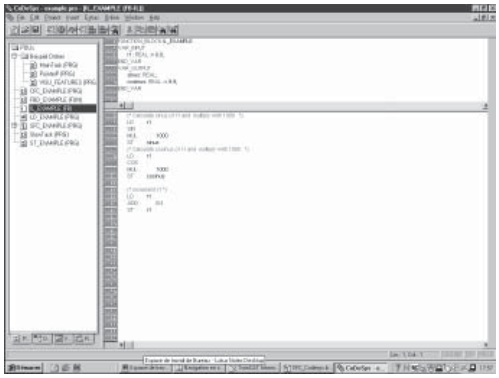

Example of Instruction List language programming

Example of a function block:
Sending the speed reference to the drive.

Programming languages (continued)

Instruction List language (IL)

Instruction List language can be used to write Boolean equations and use all the functions available in the language. It can be used to represent the equivalent of a ladder diagram in text form.
Each instruction consists of an instruction code and a bit or word type operand.
As in Ladder Diagram language, instructions are organized in sequences of instructions called statements (equivalent to a rung).

Function Block Diagram (FBD)

FBD is a graphic language. It consists of function blocks connected by a rung. The program is executed sequentially.
Each block can be a logical or arithmetical expression, a call to another function block, a jump or a return instruction.

Continuous Flow Chart (CFC)

Continuous Flow Chart programming is a graphic language. The rung connecting the various function blocks on the page is not necessarily sequential. The output of a function block may be looped back on its input or on the input of a block already inserted in the rung.

Function blocks

The PS 1131 software workshop features pre-programmed function blocks (standard library) and offers users the option of creating their own function blocks (user library).

Standard library

The standard library contains:
- Logic functions (AND, OR, etc.)
- Mathematical functions (Cos, Sin, Exp, etc.)
- Function blocks dedicated to drives which facilitate data exchange between the drive and the "Controller Inside" programmable card (example: sending the speed reference)
- Function blocks for managing the CANopen machine bus
- Graphic terminal display function blocks

User library

Users have the option of creating their own function blocks to help them structure their applications. This also provides a means of protecting the know-how contained in the algorithms by locking access to the user function blocks program.

Variable speed drives

Altivar 71

Option: "Controller Inside" programmable card

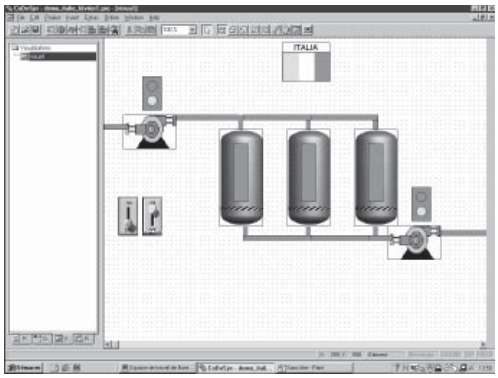

Example of runtime screen

Debugging

The PS 1131 software workshop offers a complete set of tools for debugging the application.

Program execution for debugging

The main debugging functions are:
- Use of breakpoints
- Step-by-step program execution
- Execution of a single cycle
- Direct access to the subroutines that have been called (call stack)

Realtime program animation

The main realtime program animation functions are as follows:
- Animation of part of the program in any language
- Automatic display of a variables window relating to this part of the program

Animation tables

Tables containing variables for the application to be monitored can be created and saved.
In both these tools, in addition to animating the data, it is possible to:
- Modify and force the value of any type of data
- Change the display format (binary, hexadecimal, etc.)

Oscilloscope

The PS 1131 software workshop Oscilloscope function can be used to monitor up to 20 variables in the form of curves.

Runtime screens

The PS 1131 software workshop has a built-in tool for designing and using application runtime screens. This includes:
- Creation of screen backgrounds
- Animation of graphic objects associated with variables
- Display of messages
- Etc.

Simulation

The PS 1131 software workshop Simulation function can be used to test the program without having to set up the drive.

Variable speed drives

Altivar 71

Option: "Controller Inside" programmable card

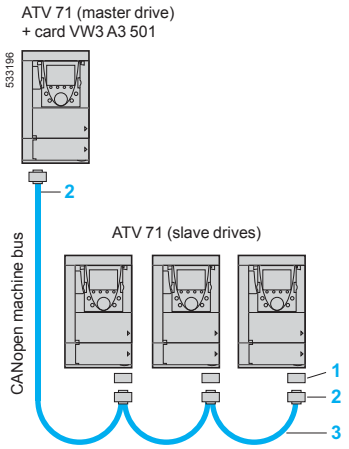

Master/slave application

VW3 CAN A71

TSX CAN KCDF 180 T

References

Card

Description	Reference	Weight kg
"Controller Inside" programmable card *(1)* equipped with one 9-way male SUB-D connector	**VW3 A3 501**	0.320

Connection accessories *(2)*

Description	No.	Reference	Weight kg
CANopen adapter to be mounted on the RJ45 socket in the drive control terminals. The adapter features a 9-way male SUB-D connector conforming to the CANopen standard (CIA DRP 303-1).	1	**VW3 CAN A71**	–
CANopen connector 9-way female SUB-D with line terminator that can be disabled	2	**TSX CAN KCDF 180T**	–

Cables *(2)*

Description	No.	Length m	Reference	Weight kg
CANopen cables Standard cable, CE marking. Low smoke emission, halogen-free. Flame retardant (IEC 60332-1).	3	50	**TSX CAN CA 50**	4.930
		100	**TSX CAN CA 100**	8.800
		300	**TSX CAN CA 300**	24.560
CANopen cables UL certification, CE marking. Flame retardant (IEC 60332-2).	3	50	**TSX CAN CB 50**	3.580
		100	**TSX CAN CB 100**	7.840
		300	**TSX CAN CB 300**	21.870
CANopen cables Cable for harsh environments *(3)* or mobile installation, CE marking. Low smoke emission, halogen-free. Flame retardant (IEC 60332-1).	3	50	**TSX CAN CD 50**	3.510
		100	**TSX CAN CD 100**	7.770
		300	**TSX CAN CD 300**	21.700

PS 1131 software workshop

Description	Reference	Weight kg
PS 1131 software workshop supplied on CD-ROM	*(4)*	–
PC serial port connection kit including various accessories such as: ■ 1 x 3 m cable with 2 RJ45 connectors ■ 1 RS 232/RS 485 converter with one 9-way female SUB-D connector and one RJ45 connector	**VW3 A8 106**	0.350

(1) The Altivar 71 drive can only take one "Controller Inside" programmable card. Consult the summary tables of possible drive, option and accessory combinations, see pages 176 to 187. Please refer to the "Machines and installations with CANopen" catalogue.
(3) Harsh environments:
- resistance to hydrocarbons, industrial oils, detergents, solder splashes
- relative humidity up to 100%
- saline atmosphere
- significant temperature variations
- operating temperature between -10°C and +70°C
(4) The product reference is provided as part of the "Controller Inside" programmable card training course. Please consult your Regional Sales Office.

Presentation: page 116
Characteristics: page 118
Functions: pages 119 to 122
Schemes: page 231

Variable speed drives
Altivar 71
Communication buses and networks

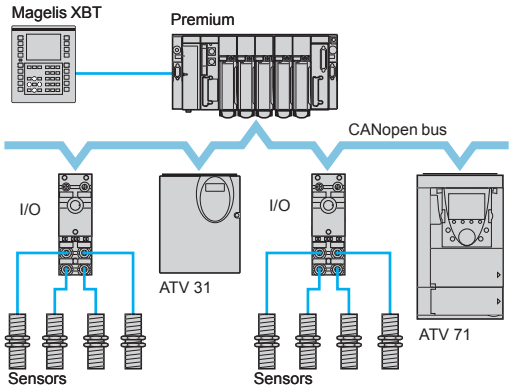

Example of configuration on CANopen machine bus

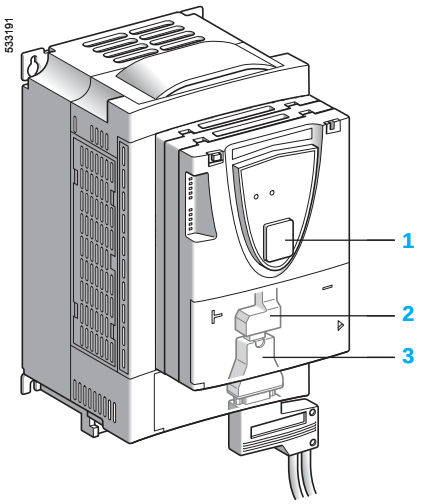

Presentation

The Altivar 71 drive has been designed to meet all the configuration requirements encountered within the context of industrial communication installations.

It includes Modbus and CANopen communication protocols as standard.

The Modbus protocol can be accessed directly by means of 2 integrated communication ports (for characteristics, see page 17):
■ One RJ45 Modbus terminal port 1, located on the drive front panel. This is for connecting:
□ The remote graphic display terminal
□ A Magelis industrial HMI terminal
□ The PowerSuite software workshop
■ One RJ45 Modbus network port 2, located on the drive's control terminals. It is assigned to control and signalling by a PLC or by another type of controller.
It can also be used to connect a terminal or the PowerSuite software workshop.

The CANopen protocol can be accessed from the Modbus network port via the CANopen adapter 3 (for characteristics, see page 17). In this case, terminal port 1 must be used to access the Modbus protocol.

The Altivar 71 drive can also be connected to other industrial communication buses and networks by adding one of the following communication cards:
■ Modbus TCP
■ Fipio
■ Modbus/Uni-Telway. This card can offer functions in addition to those of the integrated ports: Modbus ASCII and 4-wire RS 485
■ Modbus Plus
■ EtherNet/IP
■ DeviceNet
■ PROFIBUS DP
■ InterBus
■ CC-Link

The possibility of powering the control section separately enables communication (monitoring, diagnostics) to be maintained even if the power section AC supply is absent.

The main communication functions of the Altivar 58 and Altivar 58F drives are compatible with the Altivar 71 drive *(1)*:
■ Connection
■ Communication services
■ Drive behaviour (profile)
■ Control and monitoring parameters
■ Standard adjustment parameters

The PowerSuite software workshop can be used to port configurations from Altivar 58 and Altivar 58F drives to the Altivar 71.

(1) Consult the ATV 58(F)/ATV 71 Substitution Guide supplied on the documentation CD-ROM.

Functions

All the drive functions can be accessed via the network:
- Control
- Monitoring
- Adjustment
- Configuration

When the drive is equipped with the “Controller Inside” programmable card, its variables (% MW, etc) can be accessed by Modbus messaging via the integrated communication ports or via the Modbus TCP communication card.

The speed or torque command and reference may come from different control sources:
- I/O terminals
- Communication network
- “Controller Inside” programmable card
- Remote graphic display terminal

The advanced functions of the Altivar 71 drive can be used to manage switching of these drive control sources according to the application requirements.

It is possible to choose the assignment of the communication I/O data by means of:
- The network configuration software (Sycon, etc)
- The Altivar 71’s communication scanner function

For the Modbus and CANopen ports and for the communication cards, the Altivar 71 drive can be controlled:
- According to the CiA 402 profile
- According to the I/O profile where control is as simple and adaptable as control via the I/O terminals

The DeviceNet card also supports the ODVA AC Drive and Allen-Bradley drive profiles.

Communication is monitored according to criteria specific to each protocol. However, regardless of the protocol, it is possible to configure how the drive responds to a communication fault:
- Freewheel stop, stop on ramp, fast stop or braked stop
- Maintain last command received
- Fallback position at a predefined speed
- Ignore the fault

A command from the CANopen machine bus is processed with the same priority as one of the drive terminal inputs. This results in excellent response times on the network port via the CANopen adapter.

Characteristics of the Modbus TCP card VW3 A3 310 *(1)*

Structure	Connector	One RJ45 connector
	Transmission speed	10/100 Mbps, half duplex and full duplex
	IP addressing	■ Manual assignment via the display terminal or the PowerSuite software workshop ■ BOOTP (dynamic IP address server depending on the IEEE address) ■ DHCP (dynamic address server depending on the Device Name) with automatic reiteration
	Physical	Ethernet 2
	Link	LLC: IEEE 802.2 MAC: IEEE 802.3
	Network	IP (RFC791) ICMP client for supporting certain IP services such as the "ping" command
	Transport	TCP (RFC793), UDP The maximum number of connections is 8 (port 502)
Services	Transparent Ready class *(2)*	C20
	Web server	Simultaneous access via three Web browsers (more, depending on the number of connections used) Server is factory-configured and modifiable The memory available for the application is approximately 1 MB The factory-configured server contains the following pages: ■ Altivar viewer: displays the drive status and the state of its I/O, the main measurements (speed, current, etc) ■ Data editor: access to the drive parameters for configuration, adjustment and signalling ■ Altivar chart: simplified oscilloscope function ■ Security: configuration of passwords for viewing and modification access ■ FDR Agent: configuration of the “Faulty Device Replacement” parameters ■ IO Scanner: configuration of parameters for controlling and monitoring the drive via the PLC, etc. ■ Ethernet statistics: drive identification (IP addresses, version, etc.), Ethernet transmission statistics ■ E-mail: configuration of the e-mail function
	E-mail	E-mail sent on alarm or fault
	Messaging	Read Holding Registers (03), 63 words maximum Read Input Registers (04), 63 words maximum Write Single Register (06) Write Multiple Registers (16), 63 words maximum Read/Write Multiple Registers (23) Read Device Identification (43) Diagnostics (08)
	I/O data	I/O scanning service (can be inhibited): ■ 10 control parameters which can be assigned by the PowerSuite software workshop or the standard Web server ■ 10 monitoring parameters which can be assigned by the PowerSuite software workshop or the standard Web server The Global Data service is not supported
	FDR (Faulty Device Replacement)	Yes
	Communication monitoring	Can be inhibited “Time out” can be set between 0.5 and 60 s via the terminal, the PowerSuite software workshop or the standard Web server
	Device profiles	CiA 402 profile: “Device Profile Drives and Motion Control” I/O profile
	Network management	SNMP
	File transfer	FTP for Web server and TFTP for FDR
Diagnostics	Using LEDs	5 LEDs on the card: “RX” (reception), “TX” (transmission), “FLT” (Ethernet fault) “STS” (IP address) and “10/100” Mbps (speed)
	Using the graphic display terminal	Control word received Reference received
	Via the Web server	Via the “Altivar viewer”, “Data editor” and “Ethernet statistics” pages

(1) For Modbus TCP network, see pages 306 to 311.
(2) Consult our "Ethernet TCP/IP Transparent Ready" catalogue.

Presentation: page 124
Functions: page 125
References: pages 132 and 133

Characteristics of the EtherNet/IP card VW3 A3 316

Structure	Connector	2 RJ45 connectors
	Transmission speed	10/100 Mbps, half duplex and full duplex, by manual selection or auto-negotiation
	Addresses	Manual assignment via the graphic display terminal or the PowerSuite software workshop BOOTP DHCP
	Physical	IEEE 802.3
	Conformity level	Industrial
	Link	LLC: IEEE 802.2 MAC: IEEE 802.3 Automatic switching
	Network	IP (RFC791) ICMP client for supporting certain IP services such as the "ping" command
	Transport	TCP (RFC793), UDP The maximum number of connections is 8 (port 502)
Services	CIP I/O data	Master/slave hierarchy ■ Speed CIP assemblies, type 20, 21, 70 and 71 (2 parameters) ■ Speed/torque CIP assemblies, type 22, 23, 72 and 73 (3 parameters) ■ Allen-Bradley assemblies, type 103 and 104 (10 parameters, 8 of which are assignable) ■ Communication scanner assemblies, type 100 and 101 (8 parameters)
	CIP explicit messaging	Permits access to all the drive's parameters
	Web server	HTTP server: simultaneous access via 8 web browsers possible (according to the number of connections used) Server is factory-configured and modifiable The memory available for the application is approximately 1 MB The factory-configured server contains the following pages: ■ Drive monitor: displays the drive status and the state of its I/O, the main measurements (speed, current, etc) ■ Drive parameters: access to the drive parameters for configuration, adjustment and signalling ■ Drive recorder: simplified oscilloscope function ■ Security: configuration of passwords for reading and modification access ■ Ethernet/IP setup: configuration of Ethernet, TCP/IP and CIP parameters ■ Ethernet/IP scanner setup: configuration of I/O data (IO messaging) ■ Ethernet statistics: drive identification (IP addresses, version, etc), display of Ethernet transmission counters ■ Message statistics: display of TCP/IP, CIP and Modbus messaging counters ■ E-mail: configuration of the e-mail function
	E-mail	E-mail sent on alarm, fault or fault reset
	Device profiles	CIP AC Drive (02) profile Allen-Bradley drive profile CiA 402 profile: “Device Profile Drives and Motion Control” I/O profile
	Network management	No
	File transfer	No
Diagnostics	Using LEDs	5 LEDs on the card: “MS” (Module Status), “NS” (Network Status), “Link” (Link Status), “TX/RX” (Transmit/Receive port 1 and Transmit/Receive port 2)
	Using the graphic display terminal	Control word received Reference received Number of frames received
	Via the Web server	Via the “Drive monitor”, “Drive parameters”, “Ethernet statistics”, “Message statistics” and “Net IO monitoring” pages

Presentation: page 124
Functions: page 125
References: pages 132 and 133

Characteristics of the Fipio cards VW3 A3 311 and VW3 A3 301 *(1)*

Type of output		Standard Fipio card VW3 A3 311	Substitution Fipio card VW3 A3 301
Structure	Connector	One 9-way male SUB-D connector	
	Transmission speed	1 Mbps	
	Addresses	1 to 62, configurable using switches on the card	
Services	Adjustment using PLC software (Unity, PL7)	No	Yes (limited to ATV 58 or ATV 58F compatibility parameters)
	Periodic variables	8 control parameters which can be assigned by communication scanner 8 monitoring parameters which can be assigned by communication scanner Indexed periodic variable (settings)	5 control parameters 8 monitoring parameters
	Communication profile	FED C 32	Specific to the Altivar 58 or Altivar 58F drive (FSD C 8P)
	Device profiles	CiA 402 profile: “Device Profile Drives and Motion Control” I/O profile	
	Communication monitoring	Can be inhibited Fixed “time out”: 256 ms	
Diagnostics	Using LEDs	4 LEDs on the card: “RUN” (status), “ERR” (fault), “COM” (data exchange) and “I/O” (minor internal fault)	
	Using the graphic display terminal	Control word received Reference received Periodic variables (communication scanner)	

Characteristics of the Modbus Plus card VW3 A3 302 *(2)*

Structure	Connector	One 9-way female SUB-D connector
	Transmission speed	1 Mbps
	Addresses	1 to 64, configurable using switches on the card
Services	Messaging	Yes (Modbus)
	I/O data	“Peer Cop”: 8 control parameters which can be assigned by communication scanner “Global data”: 8 monitoring parameters which can be assigned by communication scanner
	Device profiles	CiA 402 profile: “Device Profile Drives and Motion Control” I/O profile
	Communication monitoring	Can be inhibited “Time out” can be set between 0.1 and 60 s via the terminal or the PowerSuite software workshop.
Diagnostics	Using LEDs	1 LEDs on the card: “MB+” (status)
	Using the graphic display terminal	Control word received Reference received I/O data (communication scanner)

(1) For the Fipio bus, see pages 312 to 315.
(2) For the Modbus Plus network, see pages 320 to 323.

Characteristics of the DeviceNet card VW3 A3 309

Structure	Connector	One removable screw connector, 5 contacts at intervals of 5.08
	Transmission speed	125 kbps, 250 kbps or 500 kbps, configurable using switches on the card
	Addresses	1 to 63, configurable using switches on the card
Services	I/O data	■ Speed CIP assemblies, type 20, 21, 70 and 71 (2 parameters) ■ Speed/torque CIP assemblies, type 22, 23, 72 and 73 (3 parameters) ■ Allen-Bradley assemblies, type 103, 104 (2 parameters) and 105 (4 parameters, of which 2 are assignable) ■ Communication scanner assemblies 100 and 101 (4 assignable parameters)
	Periodic exchange mode	Inputs: Polled, Change of state, Cyclic Outputs: Polled
	Device profiles	CIP AC Drive (02) profile Allen-Bradley drive profile CiA 402 profile: “Device Profile Drives and Motion Control” I/O profile
	Auto Device Replacement	No
	Communication monitoring	Can be inhibited “Time out” can be set via the DeviceNet network configurator
Diagnostics	Using LEDs	One two-tone LED on the card: “MNS” (status)
	Using the graphic display terminal	Control word received Reference received
Description file		A single eds file is supplied for the whole range on the documentation CD-ROM or can be downloaded from the website "www.telemecanique.com". This file contains the description of the drive parameters.

Characteristics of the InterBus card VW3 A3 304

Structure	Connector	2 connectors: One 9-way male SUB-D and one 9-way female SUB-D
	Power Supply	The card is powered by the drive. To ensure that the InterBus subscriber continues to operate during line supply failures to the power section, fit a separate power supply for the drive control section.
Services	Messaging	PCP: ■ Read: read a parameter ■ Write: write a parameter ■ Initiate: initialize the communication relationship ■ Abort: abort the communication relationship ■ Status: communication and drive status ■ Get-OV: read an object description ■ Identify: identification of the card
	I/O data	2 control parameters (command and reference) 2 monitoring parameters (status and speed output)
	Device profile	Profile 21
	Communication monitoring	Can be inhibited Fixed “time out”: 640 ms
Diagnostics	Using LEDs	5 LEDs on the card: “U” (power supply), “RC” (bus input), “Rd” (bus output), “BA” (periodic data) and “TR” (messaging)
	Using the graphic display terminal	Control word received Reference received

Characteristics of the CC-Link card VW3 A3 317

Structure	Connector	One removable screw connector, 5 contacts at intervals of 3.81
	Physical interface	2-wire RS 485
	Line matching	Switch-configurable line termination (110 Ω or 130 Ω)
	Transmission speed	156 kbps, 625 kbps, 2.5 Mbps, 5 Mbps, 10 Mbps Configurable using rotary switch on the card
	Addresses	1 to 64, configurable using 2 rotary switches on the card
Services	I/O data	Remote device station 32 remote digital inputs (RX) 32 remote digital outputs (RY) 4 remote input words (RWr) 4 remote output words (RWw)
	Device profile	Compatible with the CC-Link drive profile
	Adjustments	Access to the drive parameters via an indexing mechanism
	Communication monitoring	Can be inhibited “Time out” can be set between 0.1 s and 60 s
Diagnostics	Using LEDs	5 LEDs on the card: “Power”, “L.RUN” (Running), “SD” (Send Data), “RD” (Receive Data), “L.ERR” (Error)
	Using the graphic display terminal or the PowerSuite software workshop	Transmission speed used Drive address

Presentation: page 124
Functions: page 125
References: pages 132 and 133

Characteristics of the Profibus DP card VW3 A3 307

Structure	Connector	One 9-way female SUB-D connector
	Transmission speed	9600 bps, 19.2 kbps, 93.75 kbps, 187.5 kbps, 500 kbps, 1.5 Mbps, 3 Mbps, 6 Mbps or 12 Mbps
	Addresses	1 to 126, configurable using switches on the card
Services	I/O data	PPO type 5 8 control parameters which can be assigned by communication scanner 8 monitoring parameters which can be assigned by communication scanner Indexed periodic variable (settings)
	Device profiles	CiA 402 profile: “Device Profile Drives and Motion Control” I/O profile
	Communication monitoring	Can be inhibited “Time out” can be set via the PROFIBUS DP network configurator
Diagnostics	Using LEDs	2 LEDs on the card: “ST” (status) and “DX” (data exchange)
	Using the graphic display terminal	Control word received Reference received I/O data (communication scanner)
Description file		A single gsd file is supplied for the whole range on the documentation CD-ROM or can be downloaded from the website "www.telemecanique.com". This file does not contain the description of the drive parameters.

Characteristics of the Modbus/Uni-Telway card VW3 A3 303

Structure	Connector	One 9-way female SUB-D connector
	Transmission speed	Configurable via the display terminal or the PowerSuite software workshop: ■ 4800 bps ■ 9600 bps ■ 19200 bps
	Polarization	Type of polarization can be configured using switches on the card: ■ No polarization impedances (supplied by the wiring system, for example, in the master) ■ Two 4.7 kΩ polarization resistors
	Selection of the protocol	Via the display terminal or the PowerSuite software workshop: ■ Modbus RTU ■ Modbus ASCII ■ Uni-Telway
Services	Device profiles	CiA 402 profile: “Device Profile Drives and Motion Control” I/O profile
	Communication monitoring	Can be inhibited “Time out” fixed at 10 s
Diagnostics	Using LEDs	2 LEDs on the card: “RUN” (status) and “ERR” (fault)
	Using the graphic display terminal	Control word received Reference received
Characteristics of the Modbus protocol *(1)*		
Structure	Physical interface	2-wire RS 485, 4-wire RS 485
	Transmission mode	RTU, ASCII
	Format	Configurable via the display terminal or the PowerSuite software workshop: In RTU mode only: ■ 8 data, odd parity, 1 stop ■ 8 data, no parity, 1 stop ■ 8 data, even parity, 1 stop ■ 8 data, no parity, 2 stop In RTU and ASCII modes: ■ 7 data, even parity, 1 stop ■ 7 data, odd parity, 1 stop ■ 7 data, even parity, 2 stop ■ 7 data, odd parity, 2 stop
	Addresses	1 to 247, configurable using switches on the card.
Service	Messaging	Read Holding Registers (03), 63 words maximum Read Input Registers (04), 63 words maximum Write Single Register (06) Write Multiple Registers (16), 61 words maximum Read/Write Multiple Registers (23) Read Device Identification (43) Diagnostics (08)
Characteristics of the Uni-Telway protocol *(2)*		
Structure	Physical interface	2-wire RS 485
	Format	8 data, odd parity, 1 stop
	Addresses	1 to 147, configurable using switches on the card.
Service	Messaging	Read word (04h) Write word (14h) Read object (36h), 63 words maximum Write object (37h), 60 words maximum Identification (0Fh) Protocol version (30h) Mirror (FAh) Read error counters (A2h) Reset counters (A4h)

(1) For the Modbus serial link, see pages 316 to 319.
(2) For the Uni-Telway serial link, see pages 324 and 325.

Variable speed drives
Altivar 71
Communication buses and networks

533192

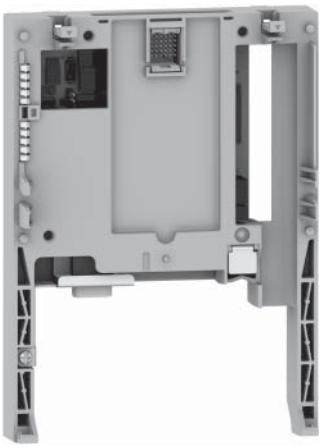

VW3 A3 311

535311

TSX FP ACC12

533194

490 NAD 911 03

Communication cards *(1) (2)*

Description	Use	Reference	Weight kg
Modbus TCP *(3)*	To be connected to a Hub or Switch using a cordset 490 NTW 000 ●●. See pages 310 and 311	**VW3 A3 310**	0.300
EtherNet/IP	To be connected to a Hub or Switch using a cordset 490 NTW 000 ●●. See pages 310 and 311	**VW3 A3 316**	0.300
Standard Fipio	To be connected using a connector TSX FP ACC 12 with an extension cable TSX FP CC●● or a drop cable TSX FP CA●●. This card should be used for new installations. It is also used to replace an ATV 58 or ATV 58F drive equipped with a VW3 A58 311 card by an ATV 71 drive. To replace an ATV 58 or ATV 58F drive equipped with a VW3 58 301 card by an ATV 71 drive, use the Fipio substitution card VW3 A3 301. See pages 314 and 315	**VW3 A3 311**	0.300
Substitution Fipio	This card is used to replace an ATV 58 or ATV 58F drive equipped with a VW3 A58 301 card by an ATV 71 drive. To replace an ATV 58 or ATV 58F drive equipped with a VW3 A58 311 card by an ATV 71 drive, use the standard Fipio card VW3 A3 311. See pages 314 and 315	**VW3 A3 301**	0.300
Modbus Plus	To be connected to the tap Modbus Plus IP 20 990 NAD 230 00 using a cordset 990 NAD 219●0. See pages 322 and 323	**VW3 A3 302**	0.300
DeviceNet	The card is equipped with a removable terminal block 5-way screw.	**VW3 A3 309**	0.300
InterBus	To be connected using cordset 170 MCI ●●●00 *(4)*	**VW3 A3 304**	0.300
CC-Link	The card is equipped with a removable terminal block 5-way screw.	**VW3 A3 317**	0.300
PROFIBUS DP	To be connected using a connector 490 NAD 911●● to the PROFIBUS cable TSX PBS CA●●00 *(4)*	**VW3 A3 307**	0.300
Modbus/ Uni-Telway	To be connected to subscriber socket TSC SCA 62 using cordset VW3 18 306 2. See pages 317 and 325	**VW3 A3 303**	0.300

(1) The Altivar 71 drive can only take one communication card. Consult the summary tables of possible drive, option and accessory combinations, see pages 176 to 187
(2) The user manuals are supplied on CD-ROM or can be downloaded from the website "www.telemecanique.com". For the Profibus DP and DeviceNet cards, the description files in gsd or eds format are also supplied on CD-ROM or can be downloaded from the website "www.telemecanique.com".
(3) Consult our "Ethernet TCP/IP Transparent Ready" catalogue.
(4) Please consult our "Automation platform Modicon Premium and Unity - PL7 software" catalogue.

Variable speed drives

Altivar 71

Communication buses and networks

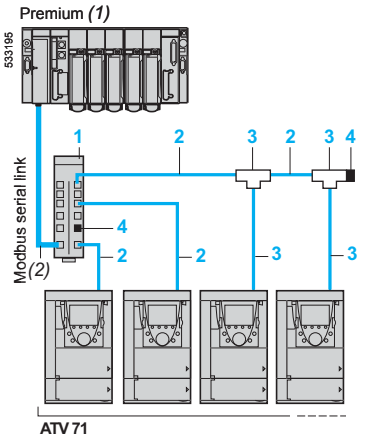

Example of Modbus diagram, connections via splitter blocks and RJ45 connectors

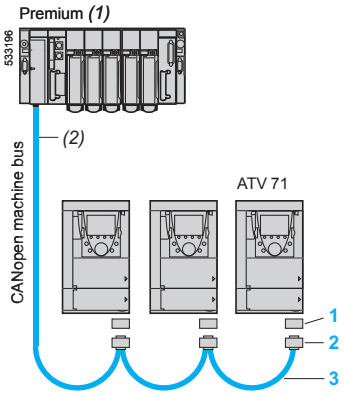

Example of CANopen diagram

121625

VW3 CAN A71

522855

VW3 CAN KCDF 180 T

Connection accessories

Description		No.	Length m	Unit reference	Weight kg
Modbus serial link					
Modbus splitter block 10 RJ45 connectors and 1 screw terminal block		1	–	**LU9 GC3**	0.500
Cordsets for Modbus serial link equipped with 2 connectors RJ45		2	0.3	**VW3 A8 306 R03**	0.025
			1	**VW3 A8 306 R10**	0.060
			3	**VW3 A8 306 R30**	0.130
Modbus T-junction boxes (with integrated cable)		3	0.3	**VW3 A8 306 TF03**	0.190
			1	**VW3 A8 306 TF10**	0.210
Line terminators For RJ45 connector *(3)*	R = 120 Ω, c = 1 nf	4	–	**VW3 A8 306 RC**	0.010
	R = 150 Ω	4	–	**VW3 A8 306 R**	0.010

Description	No.	Length m	Reference	Weight kg
CANopen machine bus *(4)*				
CANopen adapter to be installed in the RJ45 port on the drive's control terminals. The adapter provides a 9-way male SUB-D connector conforming to the CANopen standard (CIA DRP 303-1).	1	–	**VW3 CAN A71**	–
CANopen connector *(5)* 9-way female SUB-D with line terminator(can be disabled) 180° cable outlet for 2 CANopen cables. CAN-H, CAN-L, CAN-GND connection.	2	–	**VW3 CAN KCDF 180T**	–
CANopen cables *(1)* Standard cable, CE marking. Low smoke emission, halogen free. Flame retardant (IEC 60332-1).	3	50	**TSX CAN CA 50**	4.930
		100	**TSX CAN CA 100**	8.800
		300	**TSX CAN CA 300**	24.560
CANopen cables *(1)* UL certification, CE marking. Flame retardant (IEC 60332-2).	3	50	**TSX CAN CB 50**	3.580
		100	**TSX CAN CB 100**	7.840
		300	**TSX CAN CB 300**	21.870
CANopen cables *(1)* Cable for harsh environments *(5)* or mobile installation, CE marking. Low smoke emission, halogen free. Flame retardant (IEC 60332-1).	3	50	**TSX CAN CD 50**	3.510
		100	**TSX CAN CD 100**	7.770
		300	**TSX CAN CD 300**	21.700

(1) Please consult our "Automation platform Modicon Premium and Unity - PL7 software" and "Automation platform Modicon TSX Micro - PL7 software" specialist catalogues.
(2) Cable dependent on the type of controller or PLC.
(3) Sold in lots of 2.
(4) Please consult our "Machines and installations with CANopen" catalogue.
(5) For drives ATV 71H●●●M3, ATV 71H●●●M3383, ATV 71HD11M3X, HD15M3X, ATV 71HD11M3X383, HD15M3X383, ATV 71H075N4…HD18N4, ATV 71H075N4383… HD18N4383 and ATV 71HU22Y…HC63Y, this connector can be replaced by connector TSX CAN KCDF 180T.
(6) Harsh environment:
- Resistance to hydrocarbons, industrial oils, detergents, solder splashes
- Relative humidity up to 100%
- Saline atmosphere
- Significant temperature variations
- Operating temperature between -10°C and +70°C

Variable speed drives

Altivar 71

Option: resistance braking units

Presentation

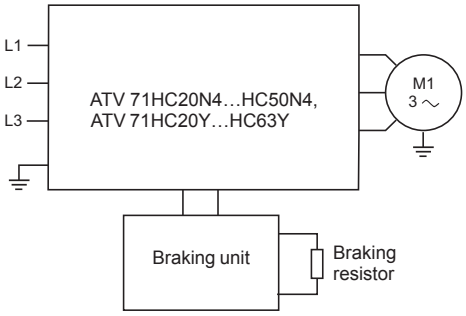

Resistance braking enables the Altivar 71 drive to operate while braking to a standstill or during "generator" operation, by dissipating the energy in the braking resistor.

ATV 71H●●●M3, ATV 71H●●●M3X, ATV 71H075N4…HC16N4, ATV 71W●●●N4, ATV 71P●●●N4Z and ATV 71HU22Y…HC16Y drives have a built-in dynamic brake transistor.

For ATV 71HC20N4…HC50N4 and ATV 71HC20Y…HC63Y drives, a braking unit must be used. This is controlled by the drive:

- For ATV 71HC20N4…HC28N4 drives, the braking unit is mounted directly on the left-hand side of the drive, see dimensions on page 189.
- For ATV 71HC40N4, HC50N4 and ATV 71HC20Y…HC63Y drives, the braking unit is an external module, see dimensions on page 204.

Applications

High-inertia machines, machines with cycles and fast cycles, high-power machines performing vertical movements.

Characteristics

Type of braking unit			VW3 A7 101	VW3 A7 102	VW3 A7 103	VW3 A7 104
Ambient air temperature around the device	Operation	°C	- 10…+ 50			
	Storage	°C	- 25…+ 70			
Degree of protection of the casing			IP 20			
Degree of pollution			2 according to standard EN 50178			
Relative humidity			Class 3K3 without condensation			
Maximum operating altitude		m	2000		1000. 1000…2260 by derating the continuous power of the braking unit by 1% per additional 100 m.	
Vibration resistance			0.2 gn			
Nominal line supply voltage and drive supply voltage (rms value)		V	380 - 15%…480 + 10% ∼		500 - 15%…690 + 10% ∼	
Engage threshold		V	785 ± 1% ⎓		1075 ± 1% ⎓	
Maximum DC bus voltage		V	850		1100	
Maximum line supply braking power	400V ∼ line supply (785 V ⎓ *(1)*)	kW	420	750	–	
	690V ∼ line supply (1075 V ⎓ *(1)*)		–		450	900
Percentage of time of conduction	at constant power at 785 V ⎓		5 % at 420 kW 15 % at 320 kW 50% at 250 kW	5 % at 750 kW 15 % at 550 kW 50% at 440 kW	–	
	at constant power at 1075 V ⎓		–		5 % at 450 kW 15 % at 400 kW 50% at 350 kW	5 % at 900 kW 15 % at 600 kW 50% at 500 kW
Cycle time		s	⩽ 240		⩽ 140	
Maximum continuous power		kW	200	400	300	400
Braking power on a vertical movement *(2)*			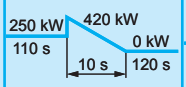	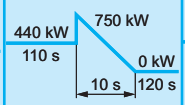	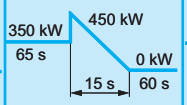	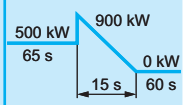
Thermal protection			Integrated, via thermal probe			
Forced ventilation		m³/h	100	600		
Mounting			Vertical			
Minimum value of the resistor to be associated with the braking unit		Ω	1.05	0.7	2	1

(1) Braking unit engage threshold
(2) Values given for a cycle time of:
- 240 s for VW3 A7 101, 102
- 140 s for VW3 A7 103, 104

References: page 135
Selection: pages 140 to 147
Dimensions: pages 189 and 204
Schemes: pages 226 and 235

Variable speed drives

Altivar 71

Option: resistance braking units

Braking units									
For drives	Power		Loss	Cable (drive-braking unit)		Cable (braking unit-resistors)		Reference	Weight
	Contin.	Max.	Con-tinuous power	Cross-section	Max. length	Cross-section	Max. length		
	kW	kW	W	mm²	m	mm²	m		kg
Supply voltage: 380…480 V 50/60 Hz									
ATV 71HC20N4… HC28N4	200	420	550	– Internal connections	–	2 x 95	50	**VW3 A7 101**	30.000
ATV 71HC31N4… HC50N4	400	750	1050	2 x 150	1	2 x 150	50	**VW3 A7 102**	80.000
Supply voltage: 500…690 V 50/60 Hz									
ATV 71HC20Y… HC31Y	300	450	650	2 x 150	1	2 x 150	50	**VW3 A7 103**	80.000
ATV 71HC40Y… HC63Y	400	900	1150	2 x 150	1	2 x 150	50	**VW3 A7 104**	80.000

Note: *To increase the braking power, several braking resistors can be mounted in parallel on the same braking unit. In this case, do not forget to take account of the minimum resistance value on each unit, see characteristics page 134.*

Variable speed drives

Altivar 71

Option: braking resistors

Presentation

The braking resistor enables the Altivar 71 drive to operate while braking to a standstill or during slowdown braking, by dissipating the braking energy.
It enables maximum transient braking torque.
The resistors are designed to be mounted on the outside of the enclosure, but should not inhibit natural cooling. Air inlets and outlets must not be obstructed in any way.
The air must be free of dust, corrosive gas and condensation.

Applications

Inertia machines, machines with cycles

General characteristics

Type of braking resistor			VW3 A7 701…709	VW3 A7 710…718
Ambient air temperature around the device	Operation	°C	0…+ 50	
	Storage	°C	- 25…+ 70	
Degree of protection of the casing			IP 20	IP 23
Thermal protection			Via temperature controlled switch or via the drive	Via thermal overload relay
Temperature controlled switch *(1)*	Activation temperature	°C	120	–
	Max. voltage - max. current		250 V ∿ - 1 A	–
	Min. voltage - min. current		24 V ⎓ - 0.1 A	–
	Maximum contact resistance	mΩ	60	–
Load factor for the dynamic brake transistors			The internal circuits of Altivar 71 drives rated 160 kW or less have a built-in dynamic brake transistor	
	ATV 71H●●●M3 ATV 71H●●●M3X, ATV 71H075N4…HD75N4 ATV 71HU22Y…HD90Y ATV 71W●●●N4 ATV 71P●●●N4Z		The dynamic brake transistor is sized so that it can tolerate: ■ The nominal motor power continuously ■ 150% of the nominal motor power for 60 s	
	ATV 71HD90N4…HC16N4		The dynamic brake transistor is sized so that it can tolerate: ■ 75% of the nominal motor power continuously ■ 150% of the nominal motor power for 10 s	

Connection characteristics

Type of terminal			Drive connection	Temperature-controlled switch
Maximum wire size	VW3 A7 701…703		0.16 in² (AWG 28)	1.5 mm² (AWG 16)
	VW3 A7 704…709		Connected on a bar, M6	0.10 in² (AWG 14)
	VW3 A7 710…718		Connected on a bar, M10	–

Minimum ohmic value of the resistors to be associated with the Altivar 71 drive, at 20°C *(2)*

ATV 71H●●●M3, ATV 71H●●●M3X, ATV 71H●●●N4 and ATV 71H●●●Y drives

Type of drive	ATV 71H	037M3, 075M3	U15M3	U22M3, U30M3	U40M3	U55M3	U75M3				
Minimum value	Ω	44	33	22	16	11	8				
Type of drive	ATV 71H	D11M3X, D15M3X	D18M3X	D22M3X, D30M3X	D37M3X… D55M3X	D75M3X					
Minimum value	Ω	3	4	3.3	1.7	1.3					
Type of drive	ATV 71H	075N4… U22N4	U30N4, U40N4	U55N4	U75N4	D11N4	D15N4, D18N4	D22N4, D30N4	D37N4	D45N4, D55N4	D75N4
Minimum value	Ω	56	34	23	19	12	7	13.3	6.7	5	3.3
Type of drive	ATV 71H	D90N4	C11N4… C16N4	C20N4… C28N4	C31N4… C50N4						
Minimum value	Ω	2.5	1.9	1.05	0.7						
Type of drive	ATV 71H	U22Y… D37Y	D45Y, D55Y	D75Y, D90Y							
Minimum value	Ω	12	8	5							

ATV 71W●●●N4 drives

Type of drive	ATV 71W	075N4… U22N4	U30N4, U40N4	U55N4	U75N4	D11N4	D15N4, D18N4	D22N4, D30N4	D37N4	D45N4, D55N4	D75N4
Minimum value	Ω	56	34	23	19	12	7	13.3	6.7	5	3.3

ATV 71P●●●N4Z drives

Type of drive	ATV 71P	075N4Z… U22N4Z	U30N4Z… U40N4Z	U55N4Z	U75N4Z	D11N4Z
Minimum value	Ω	56	34	23	19	12

(1) The switch should be connected in the sequence (use for signalling, or in the line contactor control).
(2) The minimum ohmic value is determined at a temperature of 20°C. In an environment where the temperature is below 20°C, make sure that the minimum ohmic value recommended in the table is observed.

References: page 137
Selection: pages 140 to 147
Encombrements : pages 204 and 205
Schemes: page 226

Variable speed drives

Altivar 71

Option: braking resistors

Braking resistors				
For drives	Ohmic value at 20°C	Average power available at 50°C *(1)*	Reference	Weight
	Ω	kW		kg
Supply voltage: 200…240 V 50/60 Hz				
ATV 71H037M3, H075M3	100	0.05	**VW3 A7 701**	1.900
ATV 71HU15M3, HU22M3	60	0.1	**VW3 A7 702**	2.400
ATV 71HU30M3, HU40M3	28	0.2	**VW3 A7 703**	3.500
ATV 71HU55M3, HU75M3	15	1	**VW3 A7 704**	11.000
ATV 71HD11M3X	10	1	**VW3 A7 705**	11.000
ATV 71HD15M3X	8	1	**VW3 A7 706**	11.000
ATV 71HD18M3X, HD22M3X	5	1.3	**VW3 A7 707**	11.000
ATV 71HD30M3X	4	1	**VW3 A7 708**	11.000
ATV 71HD37M3X, HD45M3X	2.5	1	**VW3 A7 709**	11.000
ATV 71HD55M3X	1.8	15.3	**VW3 A7 713**	50.000
ATV 71HD75M3X	1.4	20.9	**VW3 A7 714**	63.000
Supply voltage: 380…480 V 50/60 Hz				
ATV 71H075N4…HU40N4 ATV 71W075N4, WU40N4 ATV 71P075N4Z, PU40N4Z	100	0.05	**VW3 A7 701**	1.900
ATV 71HU55N4, HU75N4 ATV 71WU55N4, WU75N4 ATV 71PU55N4Z, PU75N4Z	60	0.1	**VW3 A7 702**	2.400
ATV 71HD11N4, HD15N4 ATV 71WD11N4, WD15N4 ATV 71PD11N4Z	28	0.2	**VW3 A7 703**	3.500
ATV 71HD18N4…HD30N4 ATV 71WD18N4…WD30N4	15	1	**VW3 A7 704**	11.000
ATV 71HD37N4 ATV 71WD37N4	10	1	**VW3 A7 705**	11.000
ATV 71HD45N4…HD75N4 ATV 71WD45N4…WD75N4	5	1.3	**VW3 A7 707**	11.000
ATV 71HD90N4	2.75	25	**VW3 A7 710**	80.000
ATV 71HC11N4, HC13N4	2.1	37	**VW3 A7 711**	86.000
ATV 71HC16N4	2.1	44	**VW3 A7 712**	104.000
ATV 71HC20N4	1.05	56	**VW3 A7 715**	136.000
ATV 71HC25N4, HC28N4	1.05	75	**VW3 A7 716**	172.000
ATV 71HC31N4, HC40N4	0.7	112	**VW3 A7 717**	266.000
ATV 71HC50N4	0.7	150	**VW3 A7 718**	350.000
Supply voltage: 500…690 V 50/60 Hz				
ATV 71HU22Y…HU55Y	100	0.05	**VW3 A7 701**	1.900
ATV 71HU75Y, HD11Y	60	0.1	**VW3 A7 702**	2.400
ATV 71HD15Y, HD18Y	28	0.2	**VW3 A7 703**	3.500
ATV 71HD22Y…HD37Y	15	1	**VW3 A7 704**	11.000
ATV 71HD45Y, HD55Y	10	1	**VW3 A7 705**	11.000
ATV 71HD75Y, HD90Y	5	1.3	**VW3 A7 707**	11.000

(1) Load factor for resistors: the value of the average power that can be dissipated at 50°C from the resistor into the casing is determined for a load factor during braking that corresponds to the majority of normal applications.
For VW3 A7 701…709:
- 2 s braking with a 0.6 Tn braking torque for a 40 s cycle
- 0.8 s braking with a 1.5 Tn braking torque for a 40 s cycle
For VW3 A7 710…718:
- 10 s braking with a 2 Tn braking torque for a 30 s cycle

Variable speed drives

Altivar 71

Option: hoist resistors

Presentation

The hoist resistor is a braking resistor which enables the Altivar 71 drive to operate while braking to a standstill or during slowdown braking, by dissipating the braking energy.
It enables maximum transient braking torque.
The resistors are designed to be mounted on the outside of the enclosure, but should not inhibit natural cooling. Air inlets and outlets must not be obstructed in any way.
The air must be free of dust, corrosive gas and condensation.

Applications

Machines performing vertical movements, machines with fast cycles, high-inertia machines.

General characteristics

Type of hoist resistor			VW3 A7 801	VW3 A7 802…A7 808	VW3 A7 809…A7 818
Ambient air temperature around the device	Operation	°C	0…+ 50		
	Storage	°C	- 25…+ 75		- 25…+ 65
Degree of protection of the casing			IP 23 if horizontal mounting IP 20 in other cases	IP 23	
Thermal protection			Via thermal overload relay		
Load factor for the dynamic brake transistors			The internal circuits of Altivar 71 drives rated 160 kW or less have a built-in dynamic brake transistor		
	ATV 71H●●●M3 ATV 71H●●●M3X, ATV 71H075N4…HD75N4 ATV 71HU22Y…HD90Y ATV 71W●●●N4 ATV 71P●●●N4Z		The dynamic brake transistor is sized so that it can tolerate: ■ The nominal motor power continuously ■ 150% of the nominal motor power for 60 s		
	ATV 71HD90N4…HC50N4 *(1)* ATV 71HC11Y…HC63Y *(1)*		The dynamic brake transistor is sized so that it can operate on a 240 s cycle at: ■ 88% of the nominal motor power for 50% of the cycle time ■ 150% of the nominal motor power for 5% of the cycle		

Connection characteristics

Maximum wire size	VW3 A7 801		Connected on a bar, M6
	VW3 A7 802…818		Connected on a bar, M10

Minimum ohmic value of the resistors to be associated with the Altivar 71 drive, at 20°C *(2)*

ATV 71H●●●M3, ATV 71H●●●M3X ATV 71H●●●N4 and ATV 71H●●●Y drives

Type of drive	ATV 71H	037M3, 075M3	U15M3	U22M3, U30M3	U40M3	U55M3	U75M3				
Minimum value	Ω	44	33	22	16	11	8				
Type of drive	ATV 71H	D11M3X, D15M3X	D18M3X	D22M3X, D30M3X	D37M3X… D55M3X	D75M3X					
Minimum value	Ω	3	4	3.3	1.7	1.3					
Type of drive	ATV 71H	075N4… U22N4	U30N4, U40N4	U55N4	U75N4	D11N4	D15N4, D18N4	D22N4, D30N4	D37N4	D45N4, D55N4	D75N4
Minimum value	Ω	56	34	23	19	12	7	13.3	6.7	5	3.3
Type of drive	ATV 71H	D90N4	C11N4… C16N4	C20N4… C28N4	C31N4… C50N4						
Minimum value	Ω	2.5	1.9	1.05	0.7						
Type of drive	ATV 71H	U22Y… D37Y	D45Y, D55Y	D75Y, D90Y	C11Y… C16Y	C20Y… C31Y	C40Y… C63Y				
Minimum value	Ω	12	8	5	4	2	1				

ATV 71W●●●N4 drives

Type of drive	ATV 71W	075N4… U22N4	U30N4, U40N4	U55N4	U75N4	D11N4	D15N4, D18N4	D22N4, D30N4	D37N4	D45N4, D55N4	D75N4
Minimum value	Ω	56	34	23	19	12	7	13.3	6.7	5	3.3

ATV 71P●●●N4Z drives

Type of drive	ATV 71P	075N4Z… U22N4Z	U30N4Z… U40N4Z	U55N4Z	U75N4Z	D11N4Z
Minimum value	Ω	56	34	23	19	12

(1) For ATV 71HC20N4…HC50N4 and ATV 71HC20Y…HC63Y, a braking unit must be used, see page 134.
(2) The minimum ohmic value is determined at a temperature of 20°C. In an environment where the temperature is below 20°C, make sure that the minimum ohmic value recommended in the table is observed.

Variable speed drives

Altivar 71

Option: hoist resistors

Hoist resistors

For drives	Ohmic value at 20°C	Average power available at 50°C *(1)*	Quantity per drive	Reference	Weight
	Ω	kW			kg
Supply voltage: 200…240 V 50/60 Hz					
ATV 71H037M3, H075M3	100	1.6	1	**VW3 A7 801**	6.000
ATV 71HU15M3	60	5.6	1	**VW3 A7 802**	21.000
ATV 71HU22M3…HU40M3	24.5	9.8	1	**VW3 A7 803**	28.000
ATV 71HU55M3, HU75M3	14	22.4	1	**VW3 A7 804**	54.000
ATV 71HD11M3X, HD15M3X	8.1	44	1	**VW3 A7 805**	92.000
ATV 71HD18M3X	4.2	62	1	**VW3 A7 806**	126.000
ATV 71HD22M3X, HD30M3X	3.5	19.5	1	**VW3 A7 807**	51.000
ATV 71HD37M3X, HD45M3X	1.85	27.4	1	**VW3 A7 808**	94.000
ATV 71HD55M3X	1.8	30.6	1	**VW3 A7 809**	103.000
ATV 71HD75M3X	1.4	44	1	**VW3 A7 810**	119.000
Supply voltage: 380…480 V 50/60 Hz					
ATV 71H075N4… HU22N4ATV 71W075N4… WU22N4ATV 71P075N4Z…PU22N4Z	100	1.6	1	**VW3 A7 801**	6.000
ATV 71HU30N4… HU55N4ATV 71WU30N4… WU55N4ATV 71PU30N4Z…PU55N4Z	60	5.6	1	**VW3 A7 802**	21.000
ATV 71HU75N4, HD11N4ATV 71WU75N4, WD11N4ATV 71PD11N4Z	24.5	9.8	1	**VW3 A7 803**	28.000
ATV 71HD15N4… HD30N4ATV 71WD15N4…WD30N4	14	22.4	1	**VW3 A7 804**	54.000
ATV 71HD37N4… HD55N4ATV 71W37N4…WD55N4	8.1	44	1	**VW3 A7 805**	92.000
ATV 71HD75N4 ATV 71WD75N4	4.2	62	1	**VW3 A7 806**	126.000
ATV 71HD90N4	2.75	56	1	**VW3 A7 811**	130.000
ATV 71HC11N4, HC13N4	2.1	75	1	**VW3 A7 812**	181.000
ATV 71HC16N4	2.1	112	1	**VW3 A7 813**	250.000
ATV 71HC20N4	1.05	112	1	**VW3 A7 814**	280.000
ATV 71HC25N4, HC28N4	1.05	150	1	**VW3 A7 815**	362.000
ATV 71HC31N4, HC40N4	0.7	225	1	**VW3 A7 816**	543.000
ATV 71HC50N4	0.7	330	1	**VW3 A7 817**	642.000
Supply voltage: 500…690 V 50/60 Hz					
ATV 71HU22Y	100	1.6	1	**VW3 A7 801**	6.000
ATV 71HU30Y…HU55Y	60	5.6	1	**VW3 A7 802**	21.000
ATV 71HU75Y, HD11Y	24.5	9.8	1	**VW3 A7 803**	28.000
ATV 71HD15Y…HD30Y	14	22.4	1	**VW3 A7 804**	54.000
ATV 71HD37Y…HD55Y	8.1	44	1	**VW3 A7 805**	92.000
ATV 71HD75Y, HD90Y	5	70	1	**VW3 A7 818**	159.000
ATV 71HC11Y	4.2	62	1	**VW3 A7 806**	126.000
ATV 71HC13Y, HC16Y	8.1	44	2	**VW3 A7 805** *(2)*	92.000
ATV 71HC20Y	4.2	62	2	**VW3 A7 806** *(2)*	126.000
ATV 71HC25Y	1.05	75	2	**VW3 A7 716** *(3) (4)*	172.000
ATV 71HC31Y	1.05	112	2	**VW3 A7 814** *(3)*	280.000
ATV 71HC40Y	0.7	112	2	**VW3 A7 717** *(3) (4)*	266.000
ATV 71HC50Y	0.7	150	2	**VW3 A7 718** *(3) (4)*	350.000
ATV 71HC63Y	0.7	225	2	**VW3 A7 816** *(3)*	543.000

(1) Operating factor for hoist resistors: the value of the average power that can be dissipated at 50°C from the resistor is determined by an operating factor during braking.
For VW3 A7 801…808 and VW3 A7 818:
- 100 s braking with 1 Tn braking torque for a 200 s cycle.
- 20 s braking with 1.6 Tn braking torque for a 200 s cycle.
For VW3 A7 809…817:
- 10 s braking with 2 Tn braking torque for a 240 s cycle.
- 110 s braking with 1.25 Tn braking torque for a 240 s cycle.
(2) To connect in parallel, add the necessary space, see page 206.
(3) To connect in series, add the necessary space, see page 206.
(4) Characteristics, see page 136.

Variable speed drives
Altivar 71
Option: braking units and resistors

Determining the braking unit and resistor

Calculating the various braking powers makes it possible to determine the braking unit and the braking resistor.

Presentation of the two main types of operation: A and B

A The braking power during deceleration is characterized by a peak power $\hat{P}_b$ obtained at the start of deceleration, which decreases to 0 in proportion with the speed.
Example: Stopping centrifuges, translational movement, change of direction, etc

B Braking power at constant speed n_2.
Example: Vertical downward movement, motor/generator test bench, gravity conveyors, etc.

n_1	Motor speed	[rpm]
n_2	Motor speed during deceleration	[rpm]
T_l	Load torque	[Nm]
T_b	Braking torque	[Nm]
$\hat{P}_b$	Maximum braking power	[W]
$\bar{P}_b$	Average braking power during time t_b	[W]
t_b	Braking time	[s]

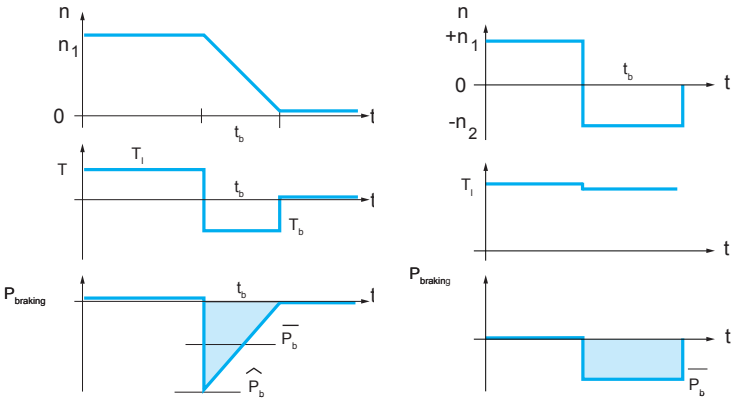

Note: These two types of operation can be combined.

Type A operation

Calculating the braking time from the inertia.

$$t_b = \frac{J \cdot \omega}{T_b + T_r}$$

$$\omega = \frac{2\pi \cdot n}{60}$$

$$T_b = \frac{\Sigma J \cdot (n_3 - n_4)}{9.55 \cdot t_b}$$

$$\hat{P}_b = \frac{T_b \cdot n_3}{9.55}$$

$$\bar{P}_b = \frac{\hat{P}_b}{2}$$

T_b	Motor braking torque	[Nm]
ΣJ	Total inertia applied to the motor	[kgm²]
n	Motor speed	[rpm]
n_3	Motor speed ahead of gearbox	[rpm]
n_4	Motor speed after gearbox	[rpm]
t_b	Braking time	[s]
$\hat{P}_b$	Peak braking power	[W]
$\bar{P}_b$	Average braking power during time t_b	[W]
T_r	Resistive torque	[Nm]

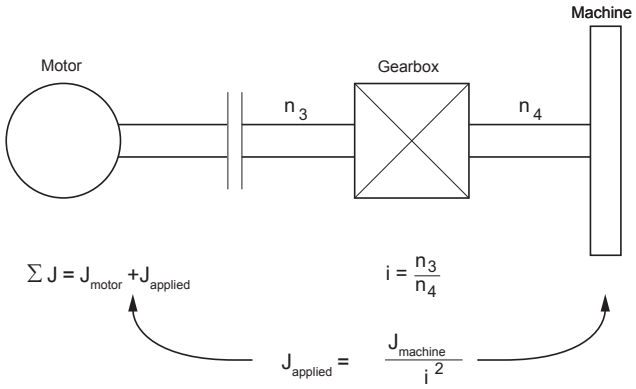

Variable speed drives

Altivar 71

Option: braking units and resistors

W	Kinetic energy	[Joule]
m	Weight	[kg]
v	Speed	[m/s]
t_b	Braking time	[s]
$\hat{P}_b$	Peak braking power	[W]
$\bar{P}_b$	Average braking power during time t_b	[W]
T_b	Braking torque	[Nm]
n	Motor speed	[rpm]
g	Acceleration	9.81 m/s²
a	Deceleration	[m/s²]
v	Linear downward speed	[m/s]
J	Moment of inertia	[kgms²]
ω	Angular speed	[rad/s]
t_b	Downward stopping time	[s]

Type B operation

1 Braking power of a load moving horizontally with constant deceleration (e.g.: carriage)

$$W = \frac{m \cdot v^2}{2} \qquad \bar{P}_b = \frac{W}{t_b} \qquad \hat{P}_b = \bar{P}_b \cdot 2$$

2 Braking power for an active load (e.g.: test bench)

$$\bar{P}_b = \frac{T_b \cdot n}{9.95}$$

3 Braking power for a downward vertical movement

$$\bar{P}_b = m \cdot g \cdot v \qquad \hat{P}_b = m \cdot (g + a) \cdot v + \frac{J \cdot \omega^2}{t_f} \qquad \omega = \frac{2\pi \cdot n}{60}$$

All the braking power calculations are only true if it is assumed that there are no losses (η = 1) and that there is no resistive torque.
To be even more precise, the following must be considered:
- the losses and the resistive torque of the system, which reduce the necessary braking power
- the driving torque (the wind, for example) which increases the braking power

The required braking power is calculated as follows:

$\hat{P}_{bR}$	Maximum actual braking power	[W]
$\bar{P}_{bR}$	Continuous actual braking power	[W]
η_{total}	Total efficiency	
P_{load}	Braking power connected with the resistive or driving torque (not taken into account in the calculation). P_{load} can be positive or negative.	[W]
η_{drive}	Drive efficiency = 0.98	
η_{mec}	Mechanical efficiency	
η_{mot}	Motor efficiency	

$$\hat{P}_{bR} = (\hat{P}_b - P_{load}) \times \eta total \qquad \bar{P}_{bR} = (\bar{P}_b - P_{load}) \times \eta total$$

$$\eta_{total} = \eta_{mec} \times \eta_{mot} \times 0.98$$

For braking, the value of the braking resistor is selected to match the required power and the braking cycle.

In general:

U_{dc}	Braking unit engage threshold	[V]

$$\hat{P}_{bR} = \frac{U^2dc}{R} \Rightarrow R = \frac{U^2dc}{\hat{P}_{bR}}$$

Continuous power is obtained by taking the operating cycle into account.

t_c	Cycle time	[s]
$\bar{P}_{b0}$	Upward braking power, therefore zero	[W]
t_0	Rise time	[s]
$\bar{P}_{b1}$	Average braking power during downward movement	[W]
t_1	Downward movement time	[1]
$\hat{P}_b$	Peak braking power	[W]
$\bar{P}_{b2}$	Average power during braking to a standstill	[W]
t_2	Standstill braking time	[s]
$P_{continuous}$	$= \frac{\bar{P}_{b0} \times t_0 + \bar{P}_{b1} \times t_1 + \bar{P}_{b2} \times t_2}{t_c}$	[W]

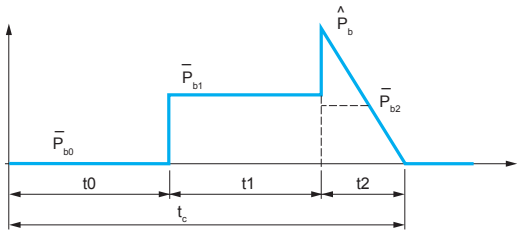

The braking unit is selected taking the following into account:
- the continuous power $\bar{P}_{b1}$
- the average braking power during downward movement $\bar{P}_{b2}$
- the peak power $\hat{P}_b$.

Depending on these elements, select the braking unit according to the characteristics on page 134.
The braking resistor is selected taking account of the same elements listed above, but with the addition of a check to ensure that the resistance value will allow the peak power to be exceeded. $\left(R = \frac{U^2dc}{\hat{P}_f}\right)$

Note: The resistance value must always be greater than or equal to the values given in the tables on pages 136 and 138.

Variable speed drives

Altivar 71

Characteristic curves for resistors

Example of using characteristic curves

VW3 A7 710 (P continuous = 25 kW) for 2.75 Ω at 20°C

Example of using the curves:

Point A *For a 200 s cycle, the resistance of 2.75 Ω accepts an overload of 7 x 25 kW (continuous power) for 24 s, i.e. braking 175 kW every 200 s.*

Point B *For a 120 s cycle, the resistance of 2.75 Ω accepts an overload of 5 x 25 kW (continuous power) for 20 s, i.e. braking 125 kW every 120 s.*

Point C *For a 60 s cycle, the resistance of 2.75 Ω accepts an overload of 5 x 25 kW (continuous power) for 10 s, i.e. braking 125 kW every 60 s.*

P max./P av. (60 s cycle)
P max./P av. (120 s cycle)
P max./P av. (200 s cycle)

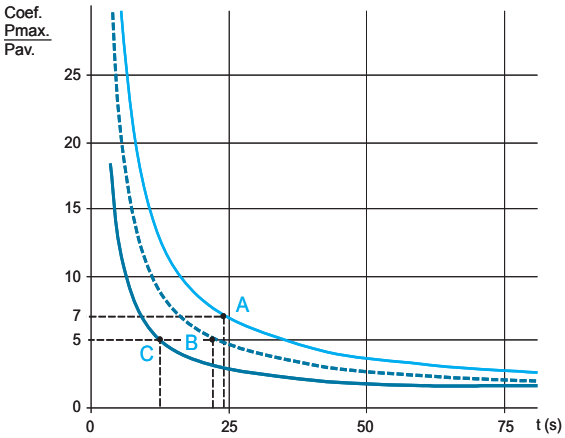

Braking resistors

VW3 A7 701 (P continuous = 0.05 kW)

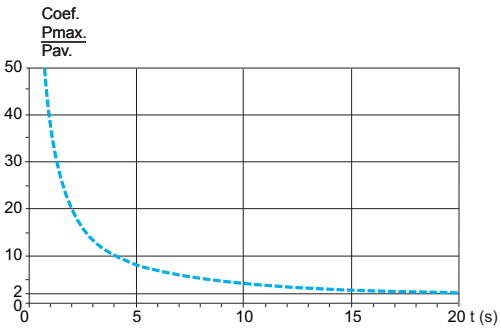

VW3 A7 702 (P continuous = 0.1 kW)

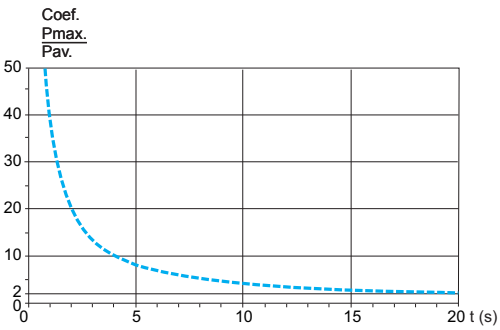

VW3 A7 703 (P continuous = 0.2 kW)

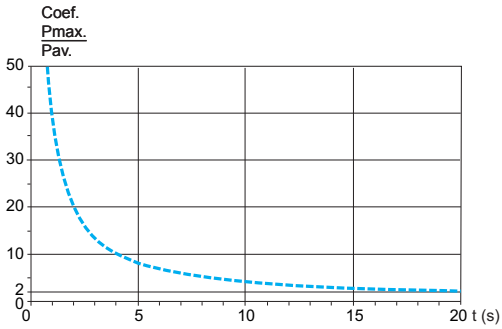

VW3 A7 704…706 (P continuous = 1 kW)

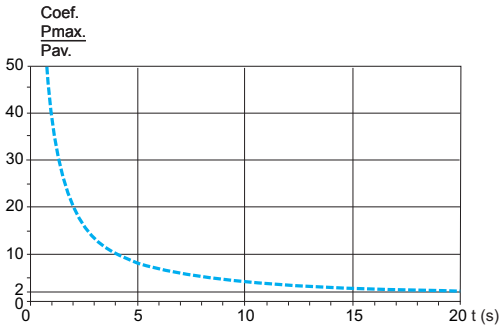

VW3 A7 707 (P continuous = 1.3 kW)

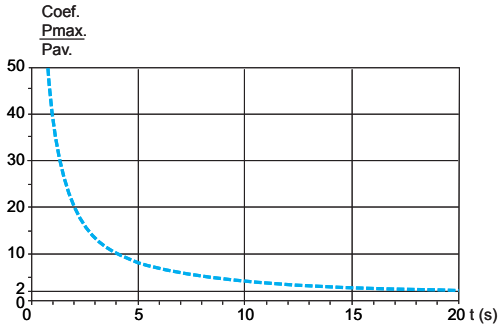

VW3 A7 708, 709 (P continuous = 1 kW)

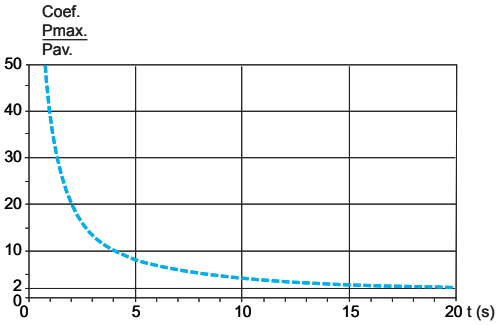

Presentation: page 136
Characteristics: page 136
References: page 137
Dimensions: pages 204 and 205
Schemes: page 226

Variable speed drives

Altivar 71

Characteristic curves for resistors

Braking resistors (continued)

VW3 A7 710 (P continuous = 25 kW)

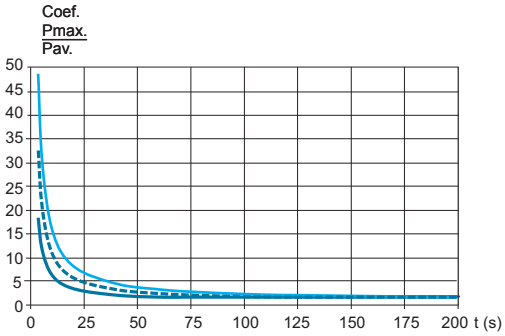

VW3 A7 711 (P continuous = 37 kW)

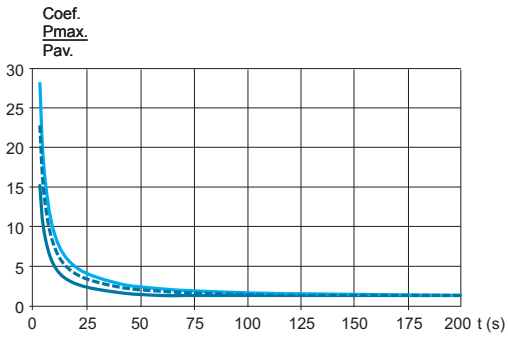

VW3 A7 712 (P continuous = 44 kW)

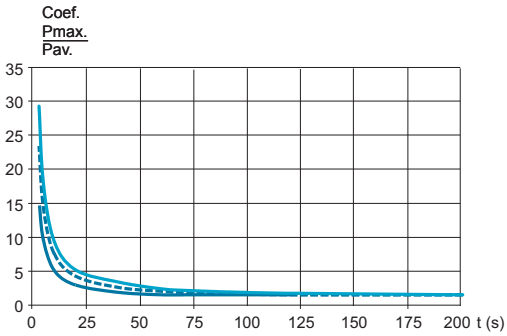

VW3 A7 713 (P continuous = 15.3 kW)

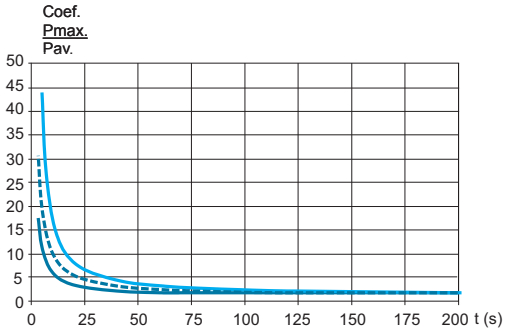

VW3 A7 714 (P continuous = 20.9 kW)

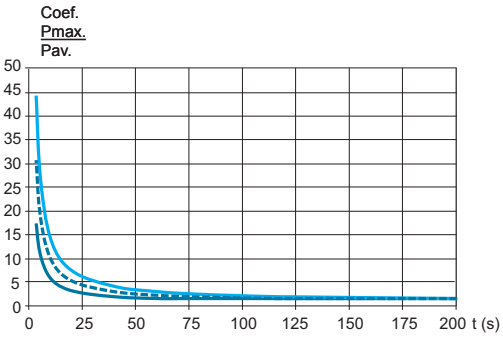

VW3 A7 715 (P continuous = 56 kW)

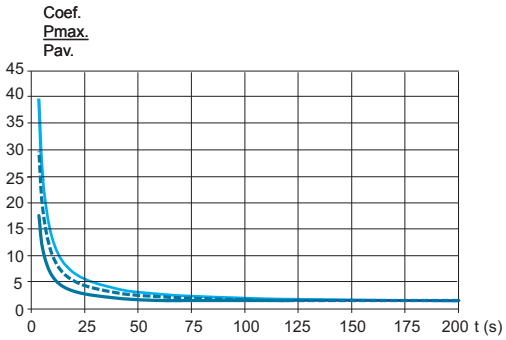

P max./P av. (60 s cycle)
P max./P av. (120 s cycle)
P max./P av. (200 s cycle)

Variable speed drives

Altivar 71

Characteristic curves for resistors

Braking resistors (continued)

VW3 A7 716 (P continuous = 75 kW)

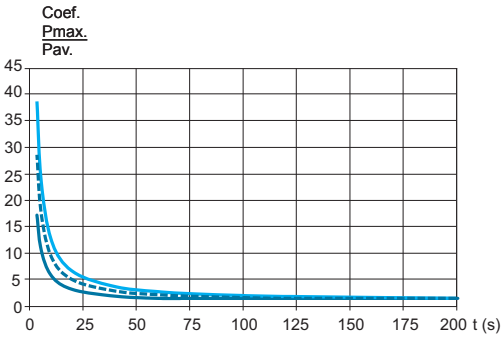

VW3 A7 717 (P continuous = 112 kW)

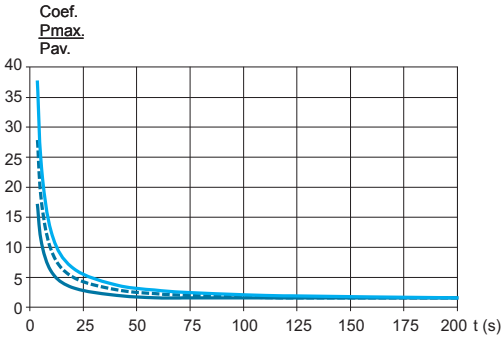

VW3 A7 718 (P continuous = 150 kW)

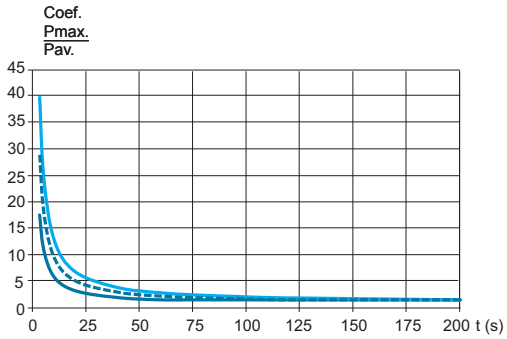

P max./P av. (60 s cycle)
P max./P av. (120 s cycle)
P max./P av. (200 s cycle)

Variable speed drives

Altivar 71

Characteristic curves for resistors

Hoist resistors

VW3 A7 801 (P continuous = 1.6 kW)

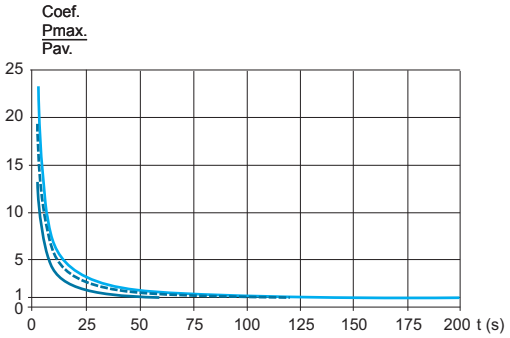

VW3 A7 802 (P continuous = 5.6 kW)

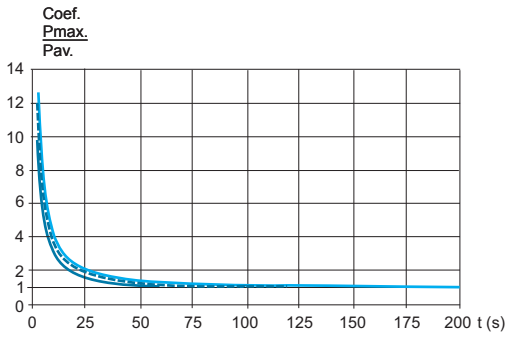

VW3 A7 803 (P continuous = 9.8 kW)

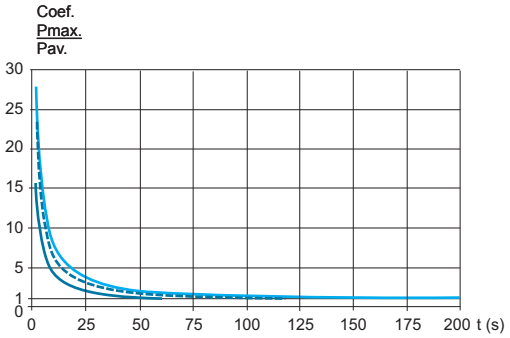

VW3 A7 804 (P continuous = 22.4 kW)

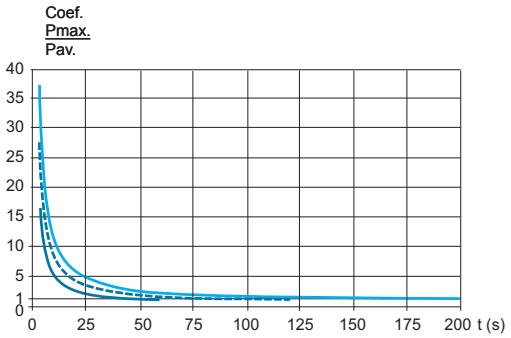

VW3 A7 805 (P continuous = 44 kW)

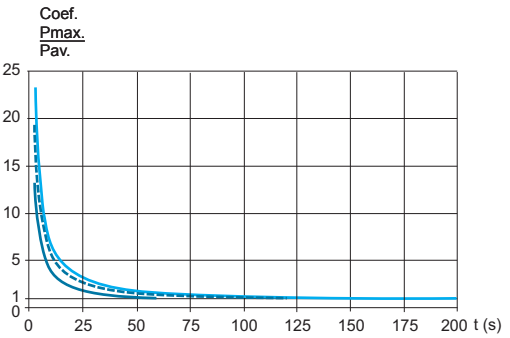

VW3 A7 806 (P continuous = 62 kW)

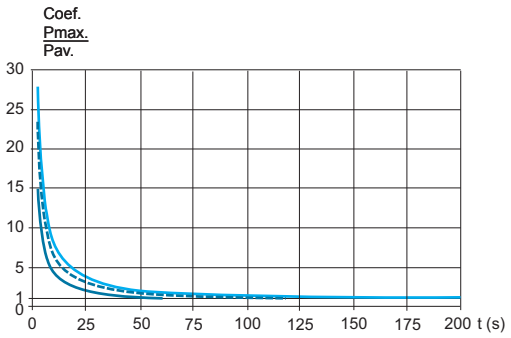

P max./P av. (60 s cycle)
P max./P av. (120 s cycle)
P max./P av. (200 s cycle)

Variable speed drives

Altivar 71

Characteristic curves for resistors

Hoist resistors (continued)

VW3 A7 807 (P continuous = 19.5 kW)

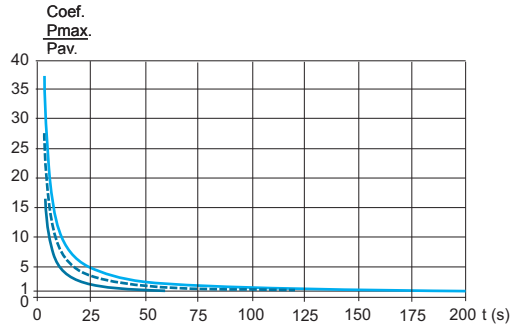

VW3 A7 808 (P continuous = 27.4 kW)

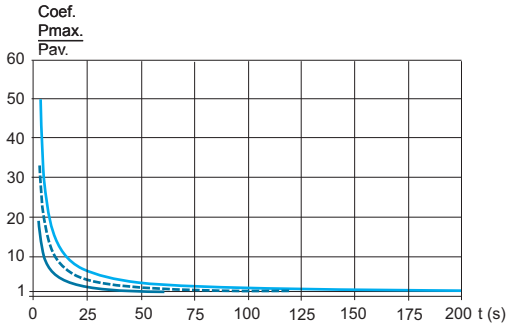

VW3 A7 809 (P continuous = 30.6 kW)

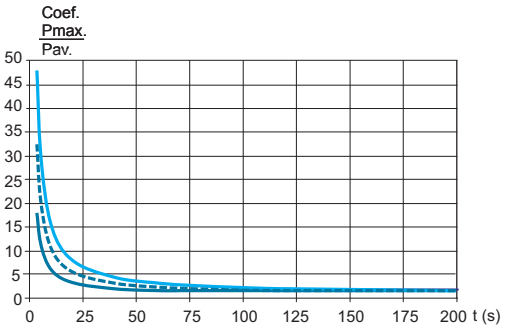

VW3 A7 810 (P continuous = 44 kW)

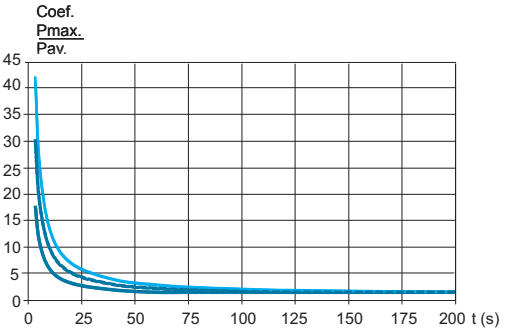

VW3 A7 811 (P continuous = 56 kW)

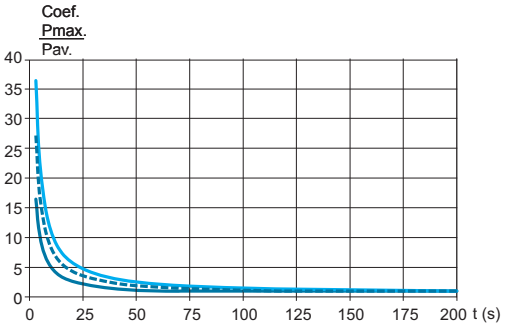

VW3 A7 812 (P continuous = 75 kW)

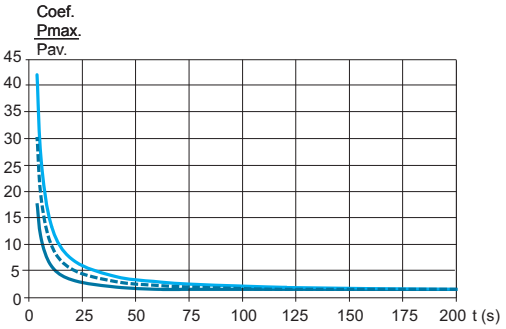

P max./P av. (60 s cycle)
P max./P av. (120 s cycle)
P max./P av. (200 s cycle)

Variable speed drives

Altivar 71

Characteristic curves for resistors

Hoist resistors (continued)

VW3 A7 813 (P continuous = 112 kW)

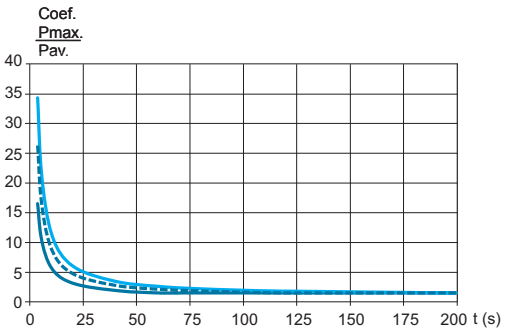

VW3 A7 814 (P continuous = 112 kW)

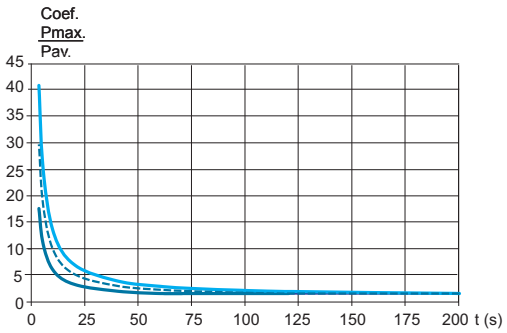

VW3 A7 815 (P continuous = 150 kW)

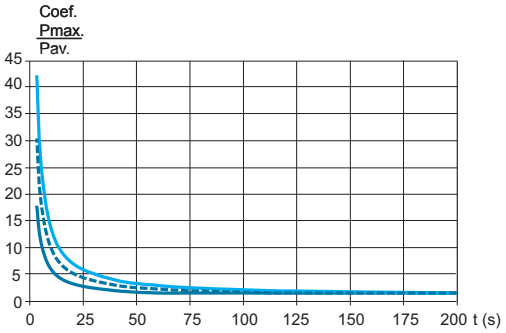

VW3 A7 816 (P continuous = 225 kW)

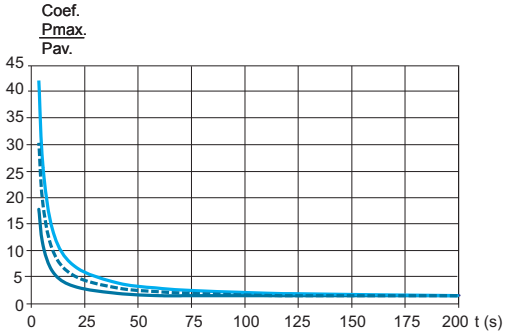

VW3 A7 817 (P continuous = 330 kW)

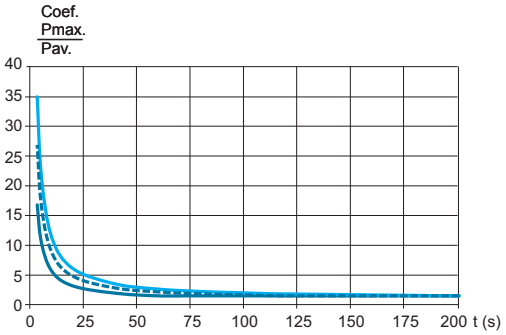

VW3 A7 818 (P continuous = 70 kW)

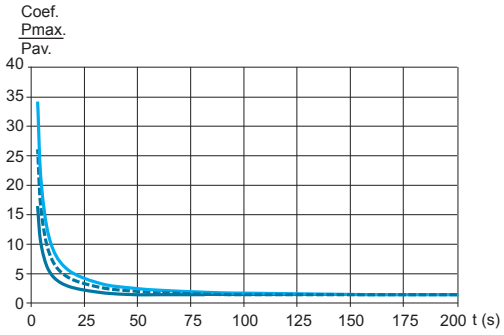

P max./P av. (60 s cycle)
P max./P av. (120 s cycle)
P max./P av. (200 s cycle)

Variable speed drives

Altivar 71

Option: network braking units

Presentation

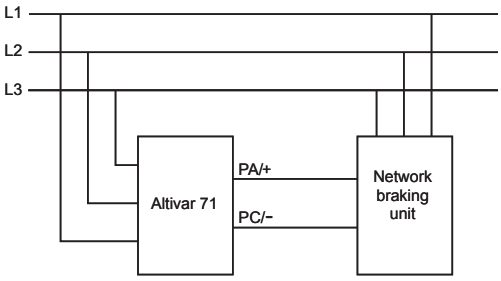

ATV 71●●●●N4
ATV 71P●●●N4Z

The network braking unit can be used to restore the following to the line supply:
- The energy from the motor
- The energy from motors controlled by several drives connected on the same DC bus.

It is available for **ATV 71●●●●N4** and **ATV 71P●●●N4Z** drives.

Applications

Braking on a driving load:
- Vertical movements
- Escalators
- Etc.

General characteristics

Degree of protection			IP 20
Maximum relative humidity			Class F humidity without condensation 5…85%
Ambient air temperature around the device	Operation	**°C**	5…+ 40 without derating Up to 55°C with output current derating of 3% per °C above 40°C
	Storage	**°C**	- 25…+ 55
Maximum operating altitude		**m**	1000 without derating 1000…4000 derating the output current by 5% per additional 1000 m

Electrical characteristics

Module type			**VW3 A7 201…212**	**VW3 A7 231…241**
Supply voltage		**V**	400 ∿	460 ∿
Nominal voltage ± 10%		**V**	380…415 ∿	440…480 ∿
Operating frequency		**Hz**	40…60 ± 10 %	
Overload capacity		**A**	1.2 x maximum current (Irms)	
Efficiency			97% (3% thermal losses)	
Power factor			1	
Fundamental frequency component			0.7…0.95	

Connection characteristics

Maximum wire size	VW3 A7 201		25 mm², connected on a bar, M5
	VW3 A7 202…205, VW3 A7 231, 232		35 mm², connected on a bar, M6
	VW3 A7 206…209, VW3 A7 233…238		95 mm², connected on a bar, M8
	VW3 A7 210…212, VW3 A7 239…241		150 mm², connected on a bar, M10

References: page 149
Selection: pages 150 and 151
Dimensions: pages 207 and 208
Schemes: page 234

Variable speed drives

Altivar 71

Option: network braking units

Line voltage: 400 V ∼

Maximum current Irms ∼	Maximum current Irms ⎓	Continuous braking power	Maximum braking power	Fuses Fast-acting semi-conductor ∼	Fuses Fast-acting semi-conductor ∼	Reference	Weight
A	A	kW	kW	A	V		kg
11	13	7	7	20	660	**VW3 A7 201**	20.000
20	24	13	13	30	690	**VW3 A7 202**	25.000
32	38	11	22	50	690	**VW3 A7 203**	26.000
48	58	21.5	33	80	690	**VW3 A7 204**	30.000
65	78	26	45	100	690	**VW3 A7 205**	32.000
102	123	32	70	160	660	**VW3 A7 206**	43.000
130	157	38	90	200	660	**VW3 A7 207**	48.000
195	236	38	135	315	660	**VW3 A7 208**	52.000
231	279	86	160	350	660	**VW3 A7 209**	90.000
289	350	120	200	400	1000	**VW3 A7 210**	100.000
360	433	135	250	500	1000	**VW3 A7 211**	115.000
500	600	200	345	630	1000	**VW3 A7 212**	125.000

Line voltage: 460 V ∼

Maximum current Irms ∼	Maximum current Irms ⎓	Continuous braking power	Maximum braking power	Fuses Fast-acting semi-conductor ∼	Fuses Fast-acting semi-conductor ∼	Reference	Weight
A	A	kW	kW	A	V		kg
28	33	11	22	50	690	**VW3 A7 231**	26.000
41	50	21.5	33	80	690	**VW3 A7 232**	30.000
57	69	26	45	100	690	**VW3 A7 233**	36.000
88	107	32	70	160	660	**VW3 A7 234**	43.000
113	137	38	90	200	660	**VW3 A7 235**	48.000
138	166	38	110	250	660	**VW3 A7 236**	48.000
157	189	38	125	250	660	**VW3 A7 237**	50.000
176	212	38	140	315	660	**VW3 A7 238**	90.000
201	243	86	160	315	660	**VW3 A7 239**	100.000
289	346	120	230	500	1000	**VW3 A7 240**	105.000
500	600	240	375	630	1000	**VW3 A7 241**	125.000

Presentation: page 148
Selection: pages 150 and 151
Dimensions: pages 207 and 208
Schemes: page 234

Variable speed drives
Altivar 71
Characteristic curves

Example of using characteristic curves

VW3 A7 204, A7 232 (Continuous braking power = 21.5 kW) *(1)*

Example of using the curves:

Required braking power of 27 kW.
The intersection point between the braking time and the time between 2 braking operations must be on or below the relevant curve.

*Point **A** For a braking time of 2 minutes, there must be at least 50 seconds between 2 braking operations.*

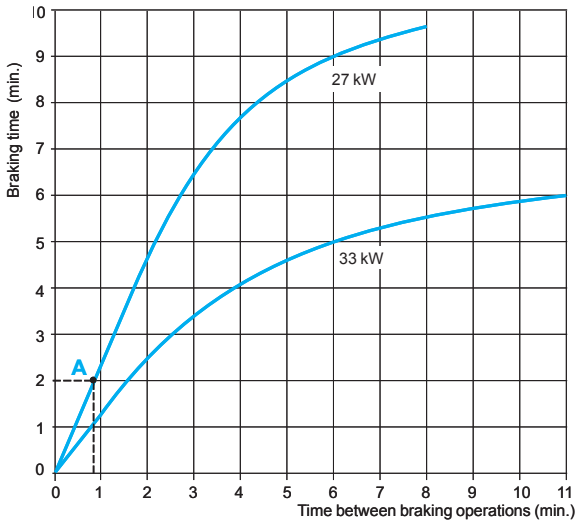

Network braking units

VW3 A7 204, A7 232 (Continuous braking power = 21.5 kW) *(1)*

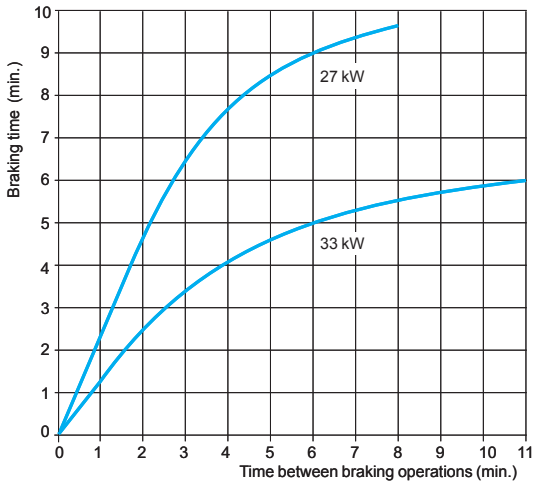

VW3 A7 205, A7 233 (Continuous braking power = 26 kW) *(1)*

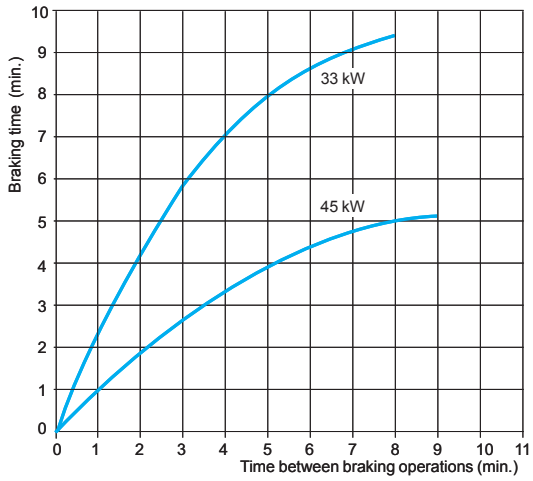

VW3 A7 206, A7 234 (Continuous braking power = 32 kW) *(1)*

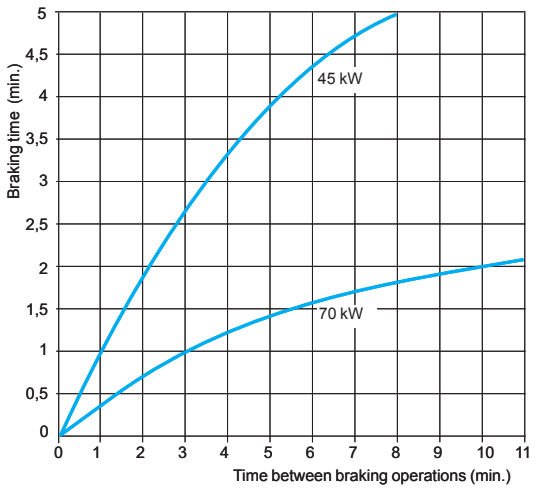

VW3 A7 207, A7 235 (Continuous braking power = 38 kW) *(1)*

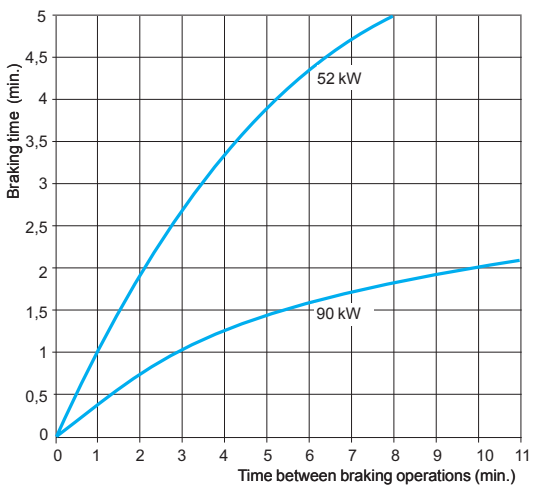

(1) Power indicated for a temperature of 35°C.

Presentation: page 148
References: page 149
Dimensions: pages 207 and 208
Schemes: page 234

Variable speed drives

Altivar 71

Characteristic curves

VW3 A7 208 (Continuous braking power = 38 kW) *(1)*

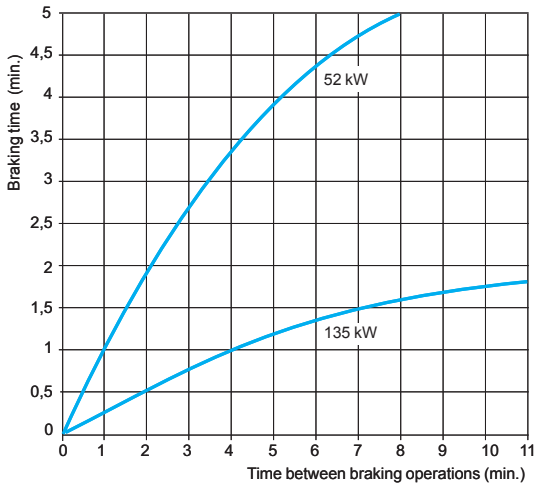

VW3 A7 209, A7 239 (Continuous braking power = 86 kW) *(1)*

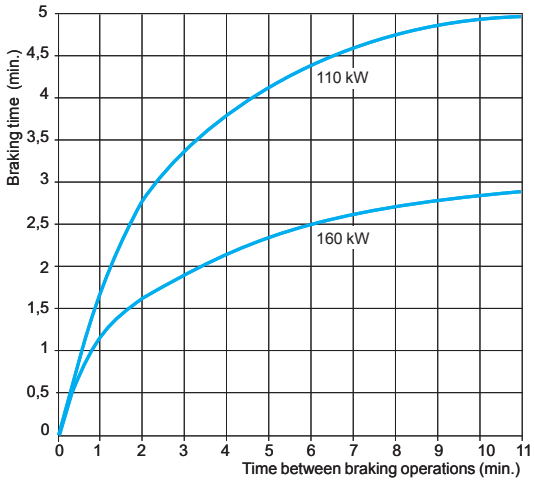

VW3 A7 210, A7 240 (Continuous braking power = 120 kW) *(1)*

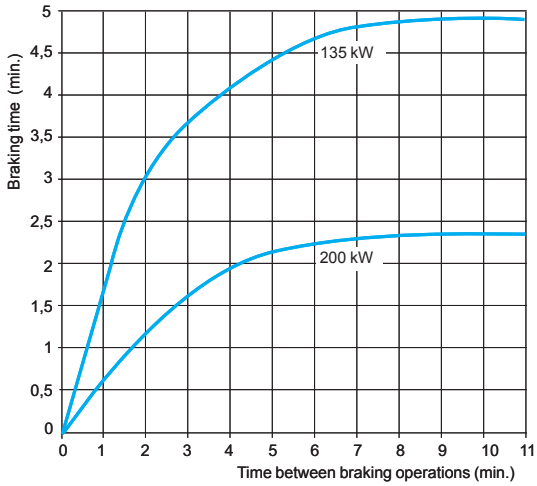

VW3 A7 211 (Continuous braking power = 135 kW) *(1)*

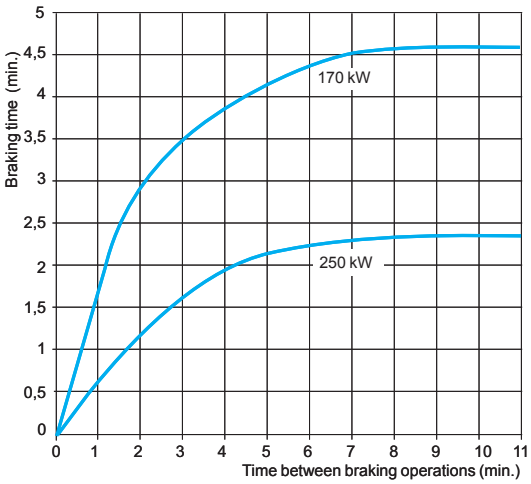

VW3 A7 212 (Continuous braking power = 200 kW) *(1)*

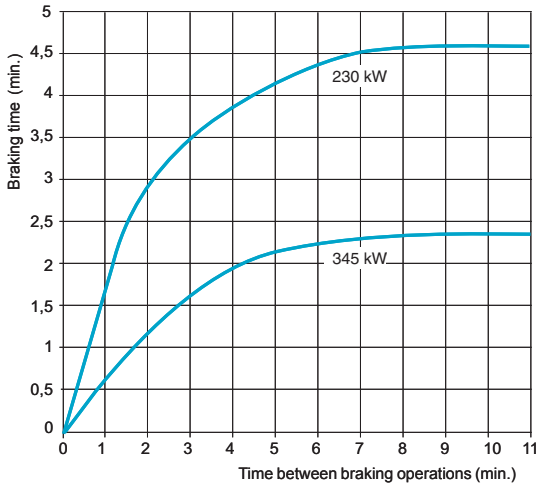

VW3 A7 241 (Continuous braking power = 240 kW) *(1)*

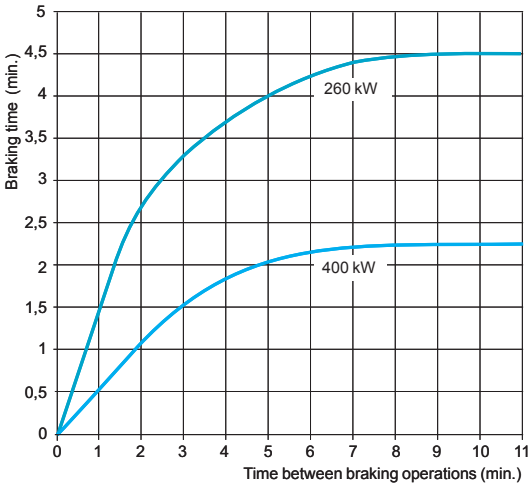

(1) Power indicated for a temperature of 35°C.

Presentation: page 148
References: page 149
Dimensions: pages 207 and 208
Schemes: page 234

Variable speed drives

Altivar 71: reduction of current harmonics

Option: DC chokes

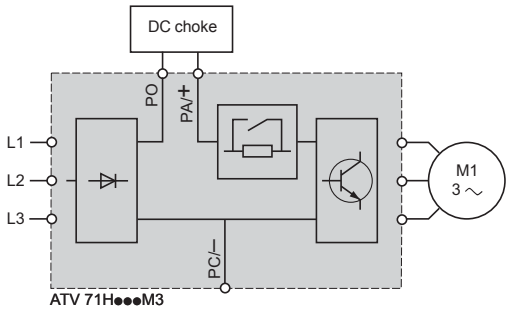

ATV 71H●●●M3
ATV 71H●●●M3X
ATV 71●●●●N4
ATV 71P●●●N4Z

Depending on the line supply, the main solutions for reducing current harmonics are as follows:

- DC chokes, see below
- Line chokes *(1)*, see page 156
- 16% and 10% passive filters, see page 161
- Use of passive filters with a DC choke, see page 161

These 4 solutions can be used on the same installation *(1)*.
It is always easier and less expensive to deal with current harmonics at installation level as a whole rather than at the level of each individual unit, particularly when using passive filters and active compensators.

DC chokes

DC chokes are used to reduce current harmonics in order to comply with standard IEC 61000-3-12 for drives in which the line current is more than 16 A and less than 75 A.
Using a DC choke with the drive complies with standard IEC 61000-3-12 provided that the RSCE ⩾ 120 *(2)* at the point of connection to the public network.
120 represents the minimum value of RSCE *(2)* for which the values in table 4 of standard IEC 61000-3-12 are not exceeded.
It is the responsibility of the installer or the user to ensure that the device is connected correctly to a connection point with an RSCE ⩾ 120.
The choke is connected to the drive power terminals.

The DC choke is supplied as standard with ATV71HD55M3X, HD75M3X and ATV 71HD90N4…HC50N4 drives.
It is compulsory for ATV 71P●●●N4Z drives if they do not have a fan (see page 31).

Applications

Reduction of current harmonics.
Reduction of the THD to 5% or 10% when used with passive filters, see pages 161 to 165.
Maintaining the motor torque in relation to the line choke.

(1) For ATV 71HU22Y…HD90Y drives, only line chokes are recommended.
For ATV 71HC11Y…HC63Y drives, a line choke is mandatory, see page 156.
(2) Short-circuit ratio.

Variable speed drives

Altivar 71: reduction of current harmonics

Option: DC chokes

Example of current harmonic levels for ATV 71H●●●M3 and ATV 71H●●●M3X drives *(1)*

Motor power		For ATV 71 drives	Network		Current harmonic levels																	THD *(3)*
			Line current	Line Isc *(2)*	H1	H5	H7	H11	H13	H17	H19	H23	H25	H29	H31	H35	H37	H41	H43	H47	H49	
kW	*HP*		A	kA	A	%	%	%	%	%	%	%	%	%	%	%	%	%	%	%	%	
Three-phase supply voltage: 230 V 50 Hz, with optional DC choke																						
0.37	*0.5*	H037M3	1.5	5	1.4	26.7	18.4	9.1	7.7	5.8	5.1	4.3	3.8	3.4	3	2.8	2.5	2.4	2.2	2.1	1.9	36.3
0.75	*1*	H075M3	3.05	5	2.81	31.99	20.91	8.88	7.36	5.6	4.63	4.07	3.42	3.18	2.71	2.59	2.24	2.17	1.91	1.86	1.66	41.27
1.5	*2*	HU15M3	6.04	5	5.55	33.65	21.59	8.14	6.84	4.97	4.19	3.54	3.08	2.71	2.43	2.17	2.01	1.78	1.7	1.5	1.47	42.4
2.2	*3*	HU22M3	8.33	5	7.64	34.89	21.11	8.78	6.72	5.36	4.1	3.8	3	2.9	2.37	2.29	1.95	1.85	1.66	1.52	1.44	43.33
3	–	HU30M3	11.12	5	10.19	35.17	20.68	8.71	6.48	5.24	3.94	3.67	2.88	2.76	2.27	2.15	1.87	1.71	1.58	1.37	1.37	43.22
4	*5*	HU40M3	14.53	5	13.29	36.23	20.51	8.73	6.2	5.2	3.73	3.61	2.71	2.68	2.14	2.06	1.76	1.61	1.49	1.27	1.28	43.91
5.5	*7.5*	HU55M3	19.2	8	17.9	30.68	17.26	8.75	6.31	5.3	4.03	3.72	2.98	2.79	2.36	2.17	1.94	1.71	1.63	1.36	1.4	38
7.5	*10*	HU75M3	26.1	15	23.9	35.23	21.09	8.82	6.71	5.38	4.09	3.82	2.98	2.91	2.35	2.31	1.92	1.87	1.63	1.54	1.4	43.96
11	*15*	HD11M3X	36.6	15	34.2	30.91	17.12	8.86	6.36	5.37	4.08	3.77	3.01	2.82	2.37	2.19	1.94	1.73	1.62	1.37	1.38	38.14
15	*20*	HD15M3X	48.6	15	55.8	25.51	13.46	8.73	6.32	5.25	4.21	3.6	3.11	2.62	2.42	1.95	1.93	1.47	1.56	1.12	1.26	35.34
18.5	*25*	HD18M3X	58.7	22	55.8	25.51	13.46	8.73	6.32	5.25	4.21	3.6	3.11	2.62	2.42	1.95	1.93	1.47	1.56	1.12	1.26	32.31
22	*30*	HD22M3X	70.28	22	65.92	29.81	15.91	8.7	6.15	5.23	3.99	3.63	2.95	2.68	2.32	2.04	1.89	1.57	1.57	1.22	1.32	36.62
30	*40*	HD30M3X	96.9	22	88.78	36.68	19.42	8.38	5.67	4.86	3.44	3.29	2.52	2.38	1.98	1.77	1.62	1.34	1.34	1.02	1.12	43.51
37	*50*	HD37M3X	116.1	22	107.9	33.09	16.4	8.59	5.59	4.97	3.54	3.33	2.6	2.36	2.03	1.72	1.63	1.26	1.32	0.94	1.06	39.24
45	*60*	HD45M3X	138.7	22	130.5	30.15	13.86	8.65	5.38	5.01	3.49	3.33	2.55	2.33	1.96	1.66	1.53	1.2	1.19	0.9	0.9	35.7
Three-phase supply voltage: 230 V 50 Hz, with DC choke supplied as standard with the drive																						
55	*75*	HD55M3X	163.5	35	175.8	46.43	27.19	8.18	6.32	4.57	3.27	3.06	2.23	2.23	1.69	1.70	1.35	1.33	1.10	1.07	0.90	55.32
75	*100*	HD75M3X	215.7	35	236.8	45.17	25.21	8.08	5.85	4.40	3.02	2.89	2.06	2.06	1.55	1.54	1.23	1.18	0.99	0.92	0.80	53.17

Example of current harmonic levels for ATV 71H●●●N4 drives *(1)*

Motor power		For ATV 71 drives	Network		Current harmonic levels																	THD *(3)*
			Line current	Line Isc *(2)*	H1	H5	H7	H11	H13	H17	H19	H23	H25	H29	H31	H35	H37	H41	H43	H47	H49	
kW	*HP*		A	kA	A	%	%	%	%	%	%	%	%	%	%	%	%	%	%	%	%	
Three-phase supply voltage: 400 V 50 Hz, with optional DC choke																						
0.75	*1*	H075N4	1.77	5	1.61	34.6	23.7	8.9	7.8	5.6	4.8	4.1	3.5	3.2	2.8	2.6	2.3	2.2	1.9	1.9	1.7	44.95
1.5	*2*	HU15N4	3.34	5	3.03	35.55	23.53	8.95	7.65	5.61	4.74	4.06	3.49	3.16	2.76	2.57	2.28	2.15	1.94	1.83	1.68	45.48
2.2	*3*	HU22N4	4.83	5	4.4	35.79	22.77	8.7	7.11	5.41	4.36	3.89	3.2	3.01	2.53	2.43	2.09	2.01	1.77	1.7	1.53	45
3	–	HU30N4	6.13	5	5.67	31.61	18.82	9.41	6.82	5.88	4.57	4.24	3.38	3.28	2.67	2.63	2.19	2.16	1.86	1.8	1.6	40.08
4	*5*	HU40N4	8.24	5	7.51	36.16	21.63	9	8.17	5.52	4.17	3.93	3.05	3	2.4	2.38	1.98	1.93	1.68	1.58	1.45	44.72
5.5	*7.5*	HU55N4	10.81	22	9.83	34.85	23.08	9.68	4.05	6.12	5.18	4.45	3.83	3.48	3.04	2.85	2.52	2.4	2.14	2.06	1.85	45.19
7.5	*10*	HU75N4	15.01	10	13.8	34.09	20.49	8.57	6.43	5.28	3.95	3.78	2.89	2.9	2.28	2.32	1.88	1.9	1.59	1.58	1.37	42.25
11	*15*	HD11N4	21.1	9	19.3	35.22	20.11	8.95	6.5	5.41	4.02	3.8	2.95	2.86	2.32	2.23	1.9	1.77	1.6	1.42	1.37	43.1
15	*20*	HD15N4	28.2	12	25.8	35.22	20.01	8.98	6.49	5.43	4.02	3.82	2.94	2.88	2.32	2.24	1.9	1.78	1.6	1.43	1.37	43.06
18.5	*25*	HD18N4	33.9	12	31.9	28.36	15.16	8.85	6.18	5.39	4.04	3.78	2.98	2.83	2.34	2.18	1.9	1.7	1.58	1.33	1.33	35.23
22	*30*	HD22N4	40.87	22	37.85	32.79	18.73	8.6	6.42	5.28	4.09	3.75	3.03	2.85	2.4	2.25	1.97	1.81	1.67	1.48	1.44	40.4
30	*40*	HD30N4	54.1	20	50.6	29.97	16.26	8.75	6.27	5.32	4.07	3.73	3.01	2.79	2.37	2.15	1.94	1.69	1.62	1.33	1.38	36.99
37	*50*	HD37N4	66.43	22	62.6	28.49	15.01	8.63	6.08	5.23	4	3.65	2.97	2.71	2.34	2.07	1.9	1.61	1.58	1.26	1.32	35.13
45	*60*	HD45N4	83.11	22	75.56	38.31	20.96	8.24	5.81	4.85	3.48	3.33	2.54	2.44	2	1.85	1.64	1.42	1.38	1.1	1.17	45.59
55	*75*	HD55N4	98.6	22	91.69	32.94	16.76	8.5	5.68	4.98	3.62	3.38	2.67	2.44	2.09	1.81	1.69	1.37	1.39	1.04	1.14	39.29
75	*100*	HD75N4	134	22	125.9	30.65	14.43	8.4	5.4	4.84	3.52	3.21	2.59	2.25	2	1.61	1.58	1.17	1.25	0.88	0.96	36.2
Three-phase supply voltage: 400 V 50 Hz, with DC choke supplied as standard with the drive																						
90	*125*	HD90N4	158.81	35	145.1	36.72	20.66	8.33	6.19	4.93	3.78	3.43	2.75	2.56	2.13	1.99	1.72	1.59	1.4	1.29	1.16	44.26
110	*150*	HC11N4	193.81	35	175.7	38.91	21.7	8.24	6.03	4.78	3.56	3.28	2.56	2.42	1.98	1.87	1.58	1.47	1.28	1.19	1.06	46.45
132	*200*	HC13N4	228.92	35	209.3	37.23	20.02	8.26	5.8	4.76	3.51	3.26	2.52	2.38	1.94	1.82	1.55	1.42	1.24	1.12	1	44.23
160	*250*	HC16N4	276.22	50	251.7	38.29	20.22	8.19	5.59	4.66	3.32	3.13	2.37	2.26	1.82	1.7	1.43	1.31	1.14	1.02	0.91	45.11
200	*300*	HC20N4	340.29	50	313.6	36.03	17.85	8.16	5.3	4.59	3.25	3.05	2.32	2.17	1.76	1.6	1.37	1.2	1.05	0.91	0.82	42.07
220	*350*	HC25N4	378.67	50	344.9	38.91	19.7	8.11	5.22	4.47	3.04	2.93	2.15	2.07	1.63	1.52	1.27	1.14	0.99	0.85	0.78	45.26
250	*400*	HC25N4	423.72	50	390.1	36.61	17.59	8.11	5.04	4.46	3.04	2.9	2.16	2.02	1.62	1.46	1.24	1.07	0.95	0.78	0.73	42.35
280	*450*	HC28N4	471.17	50	437.3	34.78	15.9	8.1	4.92	4.44	3.04	2.86	2.16	1.97	1.6	1.4	1.21	1	0.9	0.72	0.67	40.05
315	*500*	HC31N4	528.66	50	492.2	34.19	15.08	8.03	4.79	4.36	2.98	2.78	2.1	1.88	1.54	1.31	1.14	0.92	0.84	0.65	0.61	39.15
355	–	HC40N4	607.3	50	555.5	38.78	17.83	7.88	4.59	4.14	2.64	2.58	1.84	1.74	1.37	1.21	1.04	0.85	0.78	0.6	0.58	44.12
400	*600*	HC40N4	675.3	50	623.4	36.78	15.99	7.86	4.43	4.1	2.64	2.53	1.85	1.67	1.35	1.13	0.99	0.78	0.73	0.54	0.53	41.6
500	*700*	HC50N4	833.84	50	779.9	33.73	13.22	7.82	4.26	3.99	2.63	2.38	1.81	1.5	1.26	0.95	0.88	0.63	0.61	0.44	0.43	37.8

(1) Example of current harmonic levels up to harmonic order 49 for a 230 V 50 Hz line supply for ATV 71H●●●M3 and ATV 71H●●●M3X drives or a 400 V 50 Hz line supply for ATV 71H●●●N4 drives, with the chokes connected between the PO and PA/+ terminals on the Altivar 71.
(2) The line Isc values are given for the current harmonic levels stated in the table.
(3) Total harmonic distortion in accordance with IEC 61000-3-12.

Characteristics: page 155
References: page 155
Dimensions: page 209
Schemes: pages 222 to 225

Variable speed drives

Altivar 71: reduction of current harmonics

Option: DC chokes

Example of current harmonic levels for ATV 71W●●●N4 drives *(1)*

Three-phase supply voltage: 400 V 50 Hz, with optional DC choke

Motor power		For ATV 71 drives	Network		Current harmonic levels																	THD
			Line current	Line Isc *(2)*	H1	H5	H7	H11	H13	H17	H19	H23	H25	H29	H31	H35	H37	H41	H43	H47	H49	*(3)*
kW	*HP*		A	kA	A	%	%	%	%	%	%	%	%	%	%	%	%	%	%	%	%	
0.75	*1*	W075N4	1.77	5	1.61	34.6	23.7	8.9	7.8	5.6	4.8	4.1	3.5	3.2	2.8	2.6	2.3	2.2	1.9	1.9	1.7	44.95
1.5	*2*	WU15N4	3.34	5	3.03	35.55	23.53	8.95	7.65	5.61	4.74	4.06	3.49	3.16	2.76	2.57	2.28	2.15	1.94	1.83	1.68	45.48
2.2	*3*	WU22N4	4.83	5	4.4	35.79	22.77	8.7	7.11	5.41	4.36	3.89	3.2	3.01	2.53	2.43	2.09	2.01	1.77	1.7	1.53	45
3	–	WU30N4	6.13	5	5.67	31.61	18.82	9.41	6.82	5.88	4.57	4.24	3.38	3.28	2.67	2.63	2.19	2.16	1.86	1.8	1.6	40.08
4	*5*	WU40N4	8.24	5	7.51	36.16	21.63	9	8.17	5.52	4.17	3.93	3.05	3	2.4	2.38	1.98	1.93	1.68	1.58	1.45	44.72
5.5	*7.5*	WU55N4	10.81	22	9.83	34.85	23.08	9.68	4.05	6.12	5.18	4.45	3.83	3.48	3.04	2.85	2.52	2.4	2.14	2.06	1.85	45.19
7.5	*10*	WU75N4	15.01	10	13.8	34.09	20.49	8.57	6.43	5.28	3.95	3.78	2.89	2.9	2.28	2.32	1.88	1.9	1.59	1.58	1.37	42.25
11	*15*	WD11N4	21.1	9	19.3	35.22	20.11	8.95	6.5	5.41	4.02	3.8	2.95	2.86	2.32	2.23	1.9	1.77	1.6	1.42	1.37	43.1
15	*20*	WD15N4	28.2	12	25.8	35.22	20.01	8.98	6.49	5.43	4.02	3.82	2.94	2.88	2.32	2.24	1.9	1.78	1.6	1.43	1.37	43.06
18.5	*25*	WD18N4	33.9	12	31.9	28.36	15.16	8.85	6.18	5.39	4.04	3.78	2.98	2.83	2.34	2.18	1.9	1.7	1.58	1.33	1.33	35.23
22	*30*	WD22N4	40.87	22	37.85	32.79	18.73	8.6	6.42	5.28	4.09	3.75	3.03	2.85	2.4	2.25	1.97	1.81	1.67	1.48	1.44	40.4
30	*40*	WD30N4	54.1	20	50.6	29.97	16.26	8.75	6.27	5.32	4.07	3.73	3.01	2.79	2.37	2.15	1.94	1.69	1.62	1.33	1.38	36.99
37	*50*	WD37N4	66.43	22	62.6	28.49	15.01	8.63	6.08	5.23	4	3.65	2.97	2.71	2.34	2.07	1.9	1.61	1.58	1.26	1.32	35.13
45	*60*	WD45N4	83.11	22	75.56	38.31	20.96	8.24	5.81	4.85	3.48	3.33	2.54	2.44	2	1.85	1.64	1.42	1.38	1.1	1.17	45.59
55	*75*	WD55N4	98.6	22	91.69	32.94	16.76	8.5	5.68	4.98	3.62	3.38	2.67	2.44	2,09	1.81	1.69	1.37	1.39	1.04	1.14	39.29
75	*100*	WD75N4	134	22	125.9	30.65	14.43	8.4	5.4	4.84	3.52	3.21	2.59	2.25	2	1.61	1.58	1.17	1.25	0.88	0.96	36.2

Example of current harmonic levels for ATV 71P●●●N4Z drives *(1)*

Three-phase supply voltage: 400 V 50 Hz, with optional DC choke

Motor power		For ATV 71 drives	Network		Current harmonic levels																	THD
			Line current	Line Isc *(2)*	H1	H5	H7	H11	H13	H17	H19	H23	H25	H29	H31	H35	H37	H41	H43	H47	H49	*(3)*
kW	*HP*		A	kA	A	%	%	%	%	%	%	%	%	%	%	%	%	%	%	%	%	
0.75	*1*	P075N4Z	1.77	5	1.61	34.6	23.7	8.9	7.8	5.6	4.8	4.1	3.5	3.2	2.8	2.6	2.3	2.2	1.9	1.9	1.7	44.95
1.5	*2*	PU15N4Z	3.34	5	3.03	35.55	23.53	8.95	7.65	5.61	4.74	4.06	3.49	3.16	2.76	2.57	2.28	2.15	1.94	1.83	1.68	45.48
2.2	*3*	PU22N4Z	4.83	5	4.4	35.79	22.77	8.7	7.11	5.41	4.36	3.89	3.2	3.01	2.53	2.43	2.09	2.01	1.77	1.7	1.53	45
3	–	PU30N4Z	6.13	5	5.67	31.61	18.82	9.41	6.82	5.88	4.57	4.24	3.38	3.28	2.67	2.63	2.19	2.16	1.86	1.8	1.6	40.08
4	*5*	PU40N4Z	8.24	5	7.51	36.16	21.63	9	8.17	5.52	4.17	3.93	3.05	3	2.4	2.38	1.98	1.93	1.68	1.58	1.45	44.72
5.5	*7,5*	PU55N4Z	10.81	22	9.83	34.85	23.08	9.68	4.05	6.12	5.18	4.45	3.83	3.48	3.04	2.85	2.52	2.4	2.14	2.06	1.85	45.19
7.5	*10*	PU75N4Z	15.01	10	13.8	34.09	20.49	8.57	6.43	5.28	3.95	3.78	2.89	2.9	2.28	2.32	1.88	1.9	1.59	1.58	1.37	42.25
11	*15*	PD11N4Z	21.1	9	19.3	35.22	20.11	8.95	6.5	5.41	4.02	3.8	2.95	2.86	2.32	2.23	1.9	1.77	1.6	1.42	1.37	43.1

(1) Example of current harmonic levels up to harmonic order 49 for a 400 V 50 Hz line supply with chokes connected between the PO and PA/+ terminals on the Altivar 71.
(2) The line Isc values are given for the current harmonic levels stated in the table.
(3) Total harmonic distortion in accordance with IEC 61000-3-12.

Characteristics: page 155
References: page 155
Dimensions: page 209
Schemes: pages 222 to 225

Variable speed drives

Altivar 71: reduction of current harmonics

Option: DC chokes

General characteristics

Degree of protection			IP 20
Maximum relative humidity			95 %
Ambient air temperature around the device	Operation	**°C**	- 10…+ 50 without derating Up to 60°C with current derating of 2.2% per °C above 50°C
	Storage	**°C**	- 40…+ 65
Maximum operating altitude		**m**	1000 without derating 1000…3000 with current derating of 1% per additional 100 m
Voltage drop			4 to 6%
Maximum current			1.65 x nominal current for 60 seconds

Connection characteristics

Type of terminal			**Earth**	**Power Supply**
Maximum wire size and tightening torque	VW3 A4 501…505		10 mm² (AWG 6) 1.2…1.4 Nm	2.5 mm² (AWG 12) 0.4…0.6 Nm
	VW3 A4 506		10 mm² (AWG 6) 1.2…1.4 Nm	4 mm² (AWG 10) 0.5…0.8 Nm
	VW3 A4 507		10 mm² (AWG 6) 1.2…1.4 Nm	6 mm² (AWG 8) 0.8…1 Nm
	VW3 A4 508, 509		10 mm² (AWG 6) 1.2…1.4 Nm	10 mm² (AWG 6) 1.2…1.4 Nm
	VW3 A4 510		10 mm² (AWG 6) 1.2…1.4 Nm	35 mm² (AWG 0) 2.5…3 Nm
	VW3 A4 511		–	Connected on a bar, Ø 9 –
	VW3 A4 512		–	Connected on a bar, Ø 9 –

DC chokes *(1)*

For drives	Value of the inductance	Nominal current	Loss	Reference	Weight
	mH	A	W		kg
Three-phase supply voltage: 200…240 V 50/60 Hz					
ATV 71H037M3	18	2.25	7.7	**VW3 A4 501**	0.650
ATV 71H075M3	6.8	8	22.5	**VW3 A4 503**	1.700
ATV 71HU15M3	3.2	14.3	32	**VW3 A4 505**	2.200
ATV 71HU22M3	2.2	19.2	33	**VW3 A4 506**	2.500
ATV 71HU30M3	1.6	27.4	43	**VW3 A4 507**	3.000
ATV 71HU40M3, HU55M3	1.2	44	61	**VW3 A4 508**	4.300
ATV 71HU75M3	0.7	36	30.5	**VW3 A4 509**	2.500
ATV 71HD11M3X, HD15M3X	0.52	84.5	77	**VW3 A4 510**	6.400
ATV 71HD18M3X, HD22M3X	0.22	171.2	86	**VW3 A4 511**	17.850
ATV 71HD30M3X…HD45M3X	0.09	195	73	**VW3 A4 512**	10.000
Three-phase supply voltage: 380…480 V 50/60 Hz					
ATV 71H075N4 ATV 71W075N4 ATV 71P075N4Z	18	2.25	7.7	**VW3 A4 501**	0.650
ATV 71HU15N4 ATV 71WU15N4 ATV 71PU15N4Z	10	4.3	11	**VW3 A4 502**	1.000
ATV 71HU22N4, HU30N4 ATV 71WU22N4, WU30N4 ATV 71PU22N4Z, PU30N4Z	6.8	8	22.5	**VW3 A4 503**	1.700
ATV 71HU40N4 ATV 71WU40N4 ATV 71PU40N4Z	3.9	10.7	27	**VW3 A4 504**	1.650
ATV 71HU55N4 ATV 71WU55N4 ATV 71PU55N4Z	3.2	14.3	32	**VW3 A4 505**	2.200
ATV 71HU75N4 ATV 71WU75N4 ATV 71PU75N4Z	2.2	19.2	33	**VW3 A4 506**	2.500
ATV 71HD11N4 ATV 71WD11N4 ATV 71PD11N4Z	1.6	27.4	43	**VW3 A4 507**	3.000
ATV 71HD15N4, HD18N4 ATV 71WD15N4, WD18N4	1.2	44	57.5	**VW3 A4 508**	4.300
ATV 71HD22N4…HD37N4 ATV 71WD22N4…WD37N4	0.52	84.5	98.3	**VW3 A4 510**	6.400
ATV 71HD45N4…HD75N4 ATV 71WD45N4…WD75N4	0.22	171.2	128	**VW3 A4 511**	17.850

(1) For ATV 71HD55M3X, HD75M3X and ATV 71HD90N4…HC50N4 drives, the DC choke is supplied with the drive.

Presentation: pages 152 to 154
Dimensions: page 209
Schemes: pages 222 to 225

Variable speed drives

Altivar 71: reduction of current harmonics

Option: line chokes

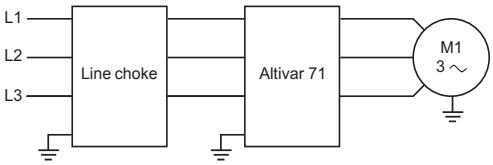

Line chokes

A line choke can be used to provide improved protection against overvoltages on the line supply and to reduce harmonic distortion of the current produced by the drive.

They are recommended for ATV 71HU22Y…HD90Y drives.Line chokes are mandatory for:
- ATV 71HU40M3…HU75M3 drives powered by a 200…240 V 50/60 Hz single-phase supply voltage
- ATV 71HC11Y…HC63Y drives

For ATV 71H●●●M3 drives powered by a 200…240 V 50/60 Hz three-phase supply voltage, ATV 71H●●●M3X, ATV 71●●●●N4 and ATV 71P●●●N4Z, line chokes can be used instead of a DC choke.
In this case, to obtain an ATV 71HD55M3X, HD75M3X or ATV 71HD90N4…HC50N4 drive without a DC choke, add the letter D at the end of the drive reference, see pages 22 and 23.

The recommended chokes limit the line current.
They have been developed in line with standard EN 50178 (VDE 0160 level 1 high energy overvoltages on the line supply).

The choke values are defined for a voltage drop between phases of between 3% and 5% of the nominal supply voltage. Values higher than this will cause loss of torque.

These chokes should be installed upstream of the drive.

Applications

The use of line chokes is recommended in particular under the following circumstances:
- Close connection of several drives in parallel
- Line supply with significant disturbance from other equipment (interference, overvoltages)
- Line supply with voltage imbalance between phases above 1.8% of the nominal voltage
- Drive supplied by a line with very low impedance (in the vicinity of a power transformer 10 times more powerful than the drive rating)
- Installation of a large number of frequency inverters on the same line
- Reducing overloads on the cosφ correction capacitors, if the installation includes a power factor correction unit.

Variable speed drives

Altivar 71: reduction of current harmonics

Option: line chokes

Example of current harmonic levels for ATV 71H●●●Y drives *(1)*

Three-phase supply voltage: 500 V 50 Hz, with optional line choke

Motor power	For ATV 71 drives	Network Line current	Network Line Isc *(2)*	Current harmonic levels H1	H5	H7	H11	H13	H17	H19	H23	H25	H29	H31	H35	H37	H41	H43	H47	H49	THD *(3)*
kW		A	kA	A	%	%	%	%	%	%	%	%	%	%	%	%	%	%	%	%	
1.5	HU22Y *(4)*	2.7	22	2.5	38	14	7.6	3.7	3.4	2.1	1.8	1.4	1	0.9	0.6	0.6	0.4	0.4	0.4	0.3	41.3
2.2	HU30Y *(4)*	3.8	22	3.6	32.7	10.1	6.9	3.4	2.8	2	1.3	1.2	0.7	0.7	0.5	0.5	0.4	0.4	0.3	0.3	35.3
3	HU40Y *(4)*	5	22	4.8	29.3	8.4	6.1	3.4	2.2	1.9	1	1	0.7	0.6	0.5	0.4	0.4	0.3	0.3	0.2	31.47
4	HU55Y *(4)*	6.7	22	6.2	36.2	13	7.5	3.6	3.4	2.1	1.8	1.4	1	0.9	0.6	0.6	0.4	0.4	0.4	0.3	39.63
5.5	HU75Y *(4)*	8.9	22	8.4	32.3	10	6.9	3.5	2.9	2.1	1.4	1.3	0.8	0.7	0.5	0.5	0.4	0.4	0.3	0.3	34.93
7.5	HD11Y *(4)*	12	22	11.2	35.5	12.9	7.5	3.7	3.5	2.2	1.9	1.5	1.1	1	0.7	0.7	0.5	0.4	0.4	0.3	39.05
11	HD15Y *(4)*	16.9	22	16	31.1	9.6	6.9	3.6	2.9	2.1	1.4	1.3	0.8	0.7	0.5	0.5	0.4	0.4	0.3	0.3	33.76
15	HD18Y *(4)*	22.1	22	20.8	33.1	11.6	7.4	3.9	3.5	2.4	1.9	1.6	1.1	1.0	0.7	0.7	0.5	0.4	0.4	0.3	36.48
18.5	HD22Y *(4)*	27.1	22	25.7	30.8	9.9	7.2	3.9	3.3	2.3	1.7	1.4	0.9	0.9	0.6	0.5	0.4	0.4	0.4	0.3	33.72
22	HD30Y *(4)*	32	22	30.1	32.4	12.1	7.6	4.3	3.9	2.7	2.3	1.8	1.4	1.2	0.9	0.8	0.6	0.5	0.4	0.4	36.16
30	HD37Y *(4)*	43.9	22	41.2	34	11.5	7.5	3.7	3.5	2.3	1.9	1.5	1.1	1	0.7	0.7	0.5	0.4	0.4	0.3	36.97
37	HD45Y *(4)*	53.8	22	51	31.3	9.8	7.2	3.7	3.2	2.3	1.6	1.4	0.9	0.9	0.6	0.5	0.4	0.4	0.4	0.3	34.1
45	HD55Y *(4)*	64.1	22	60.4	32.2	10.9	7.5	3.9	3.6	2.4	2	1.6	1.2	1.1	0.7	0.7	0.5	0.5	0.4	0.3	35.42
55	HD75Y *(4)*	78.6	22	74.1	32.7	10.4	7.2	3.7	3.3	2.3	1.8	1.5	1	0.9	0.6	0.6	0.4	0.4	0.4	0.3	35.56
75	HD90Y *(4)*	106.5	22	101.5	29.4	8.5	6.7	3.7	2.9	2.2	1.4	1.2	0.7	0.7	0.5	0.4	0.4	0.4	0.3	0.3	31.83
90	HC11Y *(5)*	127.2	22	117.3	38.7	13.93	7.12	3.2	3.02	1.87	1.57	1.15	0.84	0.78	0.52	0.49	0.36	0.33	0.29	0.22	42.11
110	HC13Y *(5)*	153	28	142.9	35.5	11.18	6.68	3.17	2.67	1.83	1.24	1.14	0.69	0.69	0.47	0.42	0.36	0.29	0.27	0.23	38.17
132	HC16Y *(5)*	181.4	28	171.1	33.1	9.38	6.2	3.14	2.36	1.78	1.03	0.99	0.62	0.54	0.45	0.36	0.33	0.28	0.22	0.2	35.28
160	HC20Y *(5)*	226.5	35	205.7	42	16.92	7.22	3.54	3.23	1.82	1.72	1.17	1	0.83	0.58	0.58	0.41	0.38	0.27	0.27	46.24
200	HC25Y *(5)*	276.9	35	256.1	37.9	13.25	6.93	3.15	2.87	1.85	1.41	1.19	0.75	0.75	0.47	0.47	0.33	0.3	0.26	0.24	41.05
250	HC31Y *(5)*	341.7	35	320.4	34.7	10.26	6.42	3.07	2.52	1.79	1.17	1.04	0.64	0.6	0.44	0.35	0.33	0.26	0.24	0.2	37.05
315	HC40Y *(5)*	438.9	35	401.8	40.2	15.44	7.22	3.29	3.1	1.87	1.64	1.16	0.9	0.83	0.56	0.53	0.37	0.37	0.3	0.25	44.05
400	HC50Y *(5)*	543.5	35	509.5	34.6	10.56	6.59	3.14	2.6	1.83	1.18	1.12	0.65	0.65	0.4	0.4	0.36	0.29	0.25	0.24	37.14
500	HC63Y *(5)*	672.3	42	637.1	31.8	8.62	5.98	3.14	2.15	1.74	0.95	0.93	0.62	0.51	0.46	0.34	0.31	0.28	0.2	0.2	33.75

Three-phase supply voltage: 600 V 60 Hz, with optional line choke

Motor power	For ATV 71 drives	Network Line current	Network Line Isc *(2)*	Current harmonic levels H1	H5	H7	H11	H13	H17	H19	H23	H25	H29	H31	H35	H37	H41	H43	H47	H49	THD *(3)*
HP		A	kA	A	%	%	%	%	%	%	%	%	%	%	%	%	%	%	%	%	
2	HU22Y *(4)*	2.3	22	2.1	40.5	16.7	7.9	4	3.6	2.1	2	1.4	1.2	1	0.8	0.7	0.5	0.5	0.4	0.4	45.01
3	HU30Y *(4)*	3.2	22	3	34.9	11.8	7.3	3.5	3.1	2.1	1.6	1.3	0.9	0.8	0.6	0.5	0.4	0.4	0.3	0.3	38.03
–	HU40Y *(4)*	–	–	–	–	–	–	–	–	–	–	–	–	–	–	–	–	–	–	–	–
5	HU55Y *(4)*	5.6	22	5.2	38.6	15.3	7.8	3.9	3.6	2.1	2	1.5	1.2	1	0.7	0.7	0.5	0.5	0.4	0.4	42.79
7.5	HU75Y *(4)*	7.4	22	7	34.3	11.5	7.3	3.6	3.2	2.1	1.6	1.4	0.9	0.9	0.6	0.5	0.4	0.4	0.3	0.3	37.36
10	HD11Y *(4)*	10.1	22	9.3	37.7	15	7.8	3.9	3.7	2.2	2.1	1.5	1.2	1.1	0.8	0.8	0.5	0.5	0.4	0.4	41.81
15	HD15Y *(4)*	14.1	22	13.3	32.7	10.8	7.3	3.7	3.2	2.2	1.6	1.4	0.9	0.9	0.6	0.5	0.4	0.4	0.3	0.3	35.75
20	HD18Y *(4)*	18.5	22	17.3	34.6	13.1	7.7	4	3.8	2.4	2.1	1.7	1.3	1.1	0.8	0.8	0.5	0.5	0.4	0.4	38.44
25	HD22Y *(4)*	22.7	22	21.4	32.1	11	7.5	3.9	3.5	2.4	1.9	1.6	1.1	1	0.7	0.6	0.5	0.4	0.4	0.3	35.31
30	HD30Y *(4)*	26.7	22	25	33.4	13.3	7.9	4.4	4.1	2.7	2.4	1.9	1.5	1.3	1	0.9	0.7	0.6	0.5	0.4	37.61
40	HD37Y *(4)*	36.8	22	34.2	36	13.4	7.7	3.9	3.7	2.3	2.1	1.6	1.3	1.1	0.8	0.8	0.5	0.5	0.4	0.4	39.39
50	HD45Y *(4)*	45	22	42.3	32.9	11.1	7.5	3.8	3.5	2.3	1.9	1.5	1.1	1	0.7	0.6	0.5	0.4	0.4	0.3	36.07
60	HD55Y *(4)*	53.6	22	50.2	33.7	12.4	7.7	4	3.8	2.5	2.2	1.7	1.3	1.2	0.8	0.8	0.6	0.5	0.4	0.4	37.38
75	HD75Y *(4)*	65.7	22	61.5	34	11.9	7.5	3.8	3.6	2.3	2	1.6	1.2	1.1	0.7	0.7	0.5	0.4	0.4	0.3	37.39
100	HD90Y *(4)*	88.7	22	84.2	30.5	9.4	7.1	3.8	3.2	2.3	1.6	1.4	0.9	0.8	0.6	0.5	0.4	0.4	0.3	0.3	33.24
125	HC11Y *(5)*	112.4	22	103.1	39.6	14.95	7.34	3.5	3.16	1.85	1.65	1.23	0.89	0.82	0.53	0.53	0.34	0.35	0.26	0.23	43.31
150	HC13Y *(5)*	132.8	28	123.4	36.7	12.32	6.99	3.27	2.92	1.89	1.43	1.2	0.74	0.74	0.48	0.45	0.35	0.28	0.27	0.2	39.73
180	HC16Y *(5)*	158.9	28	149.3	34.1	10.23	6.58	3.17	2.61	1.85	1.18	1.09	0.66	0.62	0.46	0.37	0.35	0.27	0.25	0.2	36.5
200	HC20Y *(5)*	203.9	35	184.5	42.6	17.75	7.47	3.87	3.26	1.88	1.76	1.23	1.07	0.84	0.61	0.57	0.38	0.42	0.29	0.27	47.13
250	HC25Y *(5)*	249.2	35	229.8	38.5	13.82	7.17	3.35	3.08	1.85	1.57	1.2	0.86	0.8	0.52	0.49	0.34	0.31	0.28	0.22	41.91
350	HC31Y *(5)*	310.6	35	290.8	35	10.87	6.71	3.16	2.7	1.85	1.26	1.12	0.68	0.66	0.46	0.39	0.34	0.27	0.27	0.2	37.61
450	HC40Y *(5)*	400.3	35	365.4	40.8	15.83	7.34	3.56	3.25	1.76	1.7	1.14	0.93	0.79	0.56	0.54	0.37	0.33	0.25	0.23	44.78
550	HC50Y *(5)*	490.9	35	458.8	35.4	11.21	6.84	3.21	2.77	1.85	1.31	1.14	0.69	0.69	0.46	0.42	0.35	0.28	0.26	0.2	38.08
700	HC63Y *(5)*	612.5	42	577.4	33.1	9.68	6.44	3.2	2.45	1.84	1.08	1.05	0.61	0.6	0.45	0.37	0.34	0.27	0.23	0.21	35.42

(1) Example of current harmonic levels up to harmonic order 49 for a 500 V 50 Hz or 600 V 60 Hz line supply for ATV 71H●●●Y drives, with line chokes.
(2) The line Isc values are given for the current harmonic levels stated in the table.
(3) Total harmonic distortion in accordance with IEC 61000-3-12.
(4) Use of a line choke is recommended.
(5) Use of a line choke is mandatory.

Variable speed drives

Altivar 71: reduction of current harmonics

Option: line chokes

Example of current harmonic levels for ATV 71H●●●Y drives *(1)* (continued)

Three-phase supply voltage: 690 V 50 Hz, with optional line choke

Motor power	For ATV 71 drives	Network		Current harmonic levels																	THD *(3)*
		Line current	Line Isc *(2)*	H1	H5	H7	H11	H13	H17	H19	H23	H25	H29	H31	H35	H37	H41	H43	H47	H49	
kW		A	kA	A	%	%	%	%	%	%	%	%	%	%	%	%	%	%	%	%	
2.2	HU22Y *(4)*	2.8	22	2.6	43	19	8	4.4	3.7	2.1	2.1	1.4	1.3	1	0.8	0.8	0.6	0.6	0.4	0.4	47.81
3	HU30Y *(4)*	3.7	22	3.4	37.6	14	7.6	3.7	3.4	2.1	1.8	1.4	1	0.9	0.6	0.6	0.4	0.4	0.4	0.3	41.33
4	HU40Y *(4)*	4.8	22	4.5	33.8	10.9	7.1	3.5	3	2	1.4	1.3	0.8	0.8	0.5	0.5	0.4	0.4	0.3	0.3	36.65
5.5	HU55Y *(4)*	6.7	22	6.05	41.9	18.4	7.94	4.27	3.72	2.13	2.13	1.42	1.33	1.04	0.86	0.77	0.58	0.57	0.41	0.43	47.01
7.5	HU75Y *(4)*	8.7	22	8.1	37	13.8	7.6	3.7	3.4	2.1	1.8	1.4	1.1	1	0.6	0.7	0.4	0.4	0.4	0.3	40.67
11	HD11Y *(4)*	12.7	22	11.6	40	17	7.8	4.1	3.7	2.2	2.2	1.5	1.3	1.1	0.9	0.8	0.6	0.6	0.4	0.4	44.70
15	HD15Y *(4)*	16.6	22	15.5	35.4	12.8	7.5	3.7	3.5	2.2	1.9	1.5	1.1	1	0.7	0.7	0.5	0.4	0.4	0.3	38.89
18.5	HD18Y *(4)*	20.3	22	18.5	39.5	17.3	7.7	4.2	3.9	2.4	2.3	1.6	1.5	1.2	1	0.9	0.7	0.6	0.5	0.5	44.38
22	HD22Y *(4)*	23.8	22	22.1	36.6	14.6	7.6	4	3.8	2.4	2.2	1.6	1.4	1.1	0.9	0.8	0.6	0.6	0.4	0.4	40.74
30	HD30Y *(4)*	32.1	22	29.7	36.9	16	7.7	4.4	4.1	2.6	2.5	1.8	1.7	1.3	1.1	1	0.8	0.7	0.5	0.5	41.65
37	HD37Y *(4)*	40.3	22	36.7	40	17.4	7.8	4.2	3.8	2.3	2.3	1.6	1.5	1.1	1	0.9	0.7	0.6	0.5	0.5	44.97
45	HD45Y *(4)*	48.3	22	44.7	36.9	14.2	7.7	3.9	3.7	2.3	2.1	1.6	1.3	1.1	0.8	0.8	0.5	0.5	0.4	0.4	40.81
55	HD55Y *(4)*	58	22	53.4	38.1	15.9	7.7	4.1	3.9	2.4	2.4	1.7	1.5	1.2	1	0.9	0.7	0.7	0.5	0.5	42.62
75	HD75Y *(4)*	78.8	22	73	36.8	13.9	7.5	3.8	3.6	2.2	2.1	1.5	1.3	1.1	0.8	0.8	0.5	0.5	0.4	0.4	40.58
90	HD90Y *(4)*	93.7	22	87.7	34.3	11.6	7.3	3.7	3.5	2.3	1.9	1.5	1.1	1	0.7	0.7	0.5	0.4	0.4	0.3	37.45
110	HC11Y *(5)*	116.8	28	103.4	46.8	21.75	7.52	4.45	3.35	2.05	1.92	1.16	1.16	0.89	0.75	0.6	0.49	0.46	0.33	0.32	52.56
132	HC13Y *(5)*	136.5	28	123.8	42.2	17.31	7.37	3.66	3.26	1.89	1.77	1.2	1.03	0.86	0.63	0.57	0.4	0.41	0.27	0.27	49.61
160	HC16Y *(5)*	162.8	35	149.4	39.7	14.86	7.24	3.31	3.08	1.89	1.61	1.18	0.85	0.85	0.52	0.52	0.35	0.35	0.28	0.24	43.32
200	HC20Y *(5)*	211.7	35	185.1	49	23.99	7.56	4.85	3.36	2.14	1.99	1.15	1.22	0.84	0.8	0.57	0.53	0.46	0.38	0.34	55.52
250	HC25Y *(5)*	256	35	230.2	43.9	18.86	7.4	3.9	3.32	1.9	1.81	1.17	1.11	0.86	0.68	0.61	0.43	0.46	0.3	0.31	48.72
315	HC31Y *(5)*	316.9	35	290.8	39.7	14.86	7.2	3.28	3.11	1.9	1.63	1.19	0.9	0.85	0.56	0.56	0.39	0.39	0.29	0.27	43.34
400	HC40Y *(5)*	409.2	35	365.6	45	20.1	7.56	4.26	3.37	1.97	1.93	1.24	1.16	0.89	0.75	0.68	0.5	0.48	0.35	0.39	50.31
500	HC50Y *(5)*	497.9	35	457.9	39.3	14.21	7.24	3.27	3.14	1.84	1.58	1.17	0.86	0.79	0.53	0.49	0.36	0.32	0.26	0.22	42.73
630	HC63Y *(5)*	615.9	42	572.2	37	12.12	7.01	3.15	2.94	1.82	1.43	1.16	0.77	0.73	0.49	0.44	0.37	0.28	0.3	0.22	39.87

(1) Example of current harmonic levels up to harmonic order 49 for a 690 V 50 Hz line supply for ATV 71H●●●Y drives, with line chokes.
(2) The line Isc values are given for the current harmonic levels stated in the table.
(3) Total harmonic distortion in accordance with IEC 61000-3-12.
(4) Use of a line choke is recommended.
(5) Use of a line choke is mandatory.

Variable speed drives

Altivar 71: reduction of current harmonics

Option: line chokes

General characteristics

Type of choke			VW3 A58501, A58502	VW3 A4 551... A4 553	VW3 A4 554, A4 555	VW3 A4 556... A4 560	VW3 A4 561... A4 565, A4 568...572
Conformity to standards			EN 50178 (VDE 0160 level 1 high energy overvoltages on the line supply), IEC 60076 (with HD 398)				
Degree of protection	Choke		IP 00				
	Terminals		IP 20		IP 10	IP 00	
Atmospheric pollution			3 C2, 3B1, 3S1 conforming to IEC 721.3.3				
Degree of pollution			2 conforming to EN 50178				
Vibration resistance			1.5 mm from 3…13 Hz, 1 gn from 13…200 Hz, conforming to IEC 60068-2				
Shock resistance			15 gn for 11 ms conforming to IEC 60068-2-27				
Maximum relative humidity			95 %				
Ambient air temperature around the device	Operation	**°C**	0…+ 45 without derating Up to + 55°C with current derating of 2% per °C above 45°C				
	Storage	**°C**	- 25…+ 70				
Isolation class			F				
Clearance distance in air		**mm**	5.5 conforming to IEC 60664				
Leakage distance in air		**mm**	11.5 conforming to IEC 60664				
Maximum operating altitude		**m**	1000 without derating 1000…3000 with current derating of 1% per additional 100 m				
Voltage drop			Between 3% and 5% of the nominal supply voltage. Values higher than this will cause loss of torque.				
Maximum current			1.65 x nominal current for 60 seconds				

Connection characteristics

Maximum wire size and tightening torque	VW3 A58501		16 mm², (AWG 4) 1.2…1.4 Nm
	VW3 A58502		6 mm², (AWG 8) 0.8…1 Nm
	VW3 A4 551, 552		2.5 mm², (AWG 12) 0.4…0.6 Nm
	VW3 A4 553		6 mm², (AWG 8) 0.8…1 Nm
	VW3 A4 554		16 mm², (AWG 4) 1.2…1.4 Nm
	VW3 A4 555		35 mm², (AWG 0) 2.5…3 Nm
	VW3 A4 556		Connected on a bar, Ø 6.5 mm –
	VW3 A4 557, 558, 570		Connected on a bar, Ø 9 mm –
	VW3 A4 559…561, 568		Connected on a bar, Ø 11 mm –
	VW3 A4 562…565, 569, 571, 572		Connected on a bar, Ø 13 mm –

Presentation: pages 156 to 158
References: page 160
Dimensions: page 209
Schemes: pages 222 to 225

Variable speed drives

Altivar 71: reduction of current harmonics

Option: line chokes

PF107532

VW3 A4 572

Line chokes

For drives	Network Line Isc	Line choke				Quantity per drive	Reference	Weight
		Inductance value	Nominal current	Current of saturation	Loss			
	kA	mH	A	A	W			kg
Single-phase supply voltage: 200…240 V 50/60 Hz								
ATV 71HU40M3 *(1)*	5	2	25	–	45	1	**VW3 A58501**	3.500
ATV 71HU55M3 *(1)*	5	1	45	–	50	1	**VW3 A58502**	3.500
ATV 71HU75M3 *(1)*	22	1	45	–	50	1	**VW3 A58502**	3.500
Three-phase supply voltage: 200…240 V 50/60 Hz								
ATV 71H037M3, H075M3	5	10	4	–	45	1	**VW3 A4 551**	1.500
ATV 71HU15M3, HU22M3	5	4	10	–	65	1	**VW3 A4 552**	3.000
ATV 71HU30M3	5	2	16	–	75	1	**VW3 A4 553**	3.500
ATV 71HU40M3	5	1	30	–	90	1	**VW3 A4 554**	6.000
ATV 71HU55M3	22	1	30	–	90	1	**VW3 A4 554**	6.000
ATV 71HU75M3, HD11M3X	22	0.5	60	–	94	1	**VW3 A4 555**	11.000
ATV 71HD15M3X	22	0.3	100	–	260	1	**VW3 A4 556**	16.000
ATV 71HD18M3X…HD45M3X	22	0.15	230	–	400	1	**VW3 A4 557**	45.000
ATV 71HD55M3X	35	0.049	429	855	278	1	**VW3 A4 562**	50.000
ATV 71HD75M3X	35	0.038	509	1025	280	1	**VW3 A4 563**	59.000
Three-phase supply voltage: 380…480 V 50/60 Hz								
ATV 71H075N4, HU15N4 ATV 71W075N4, WU15N4 ATV 71P075N4Z, PU15N4Z	5	10	4	–	45	1	**VW3 A4 551**	1.500
ATV 71HU22N4…HU40N4 ATV 71WU22N4…WU40N4 ATV 71PU22N4Z…PU40N4Z	5	4	10	–	65	1	**VW3 A4 552**	3.000
ATV 71HU55N4, HU75N4 ATV 71WU55N4, WU75N4 ATV 71PU55N4Z, PU75N4Z	22	2	16	–	75	1	**VW3 A4 553**	3.500
ATV 71HD11N4, HD15N4 ATV 71WD11N4, WD15N4 ATV 71PD11N4Z	22	1	30	–	90	1	**VW3 A4 554**	6.000
ATV 71HD18N4, HD22N4 ATV 71WD18N4, WD22N4	22	0.5	60	–	94	1	**VW3 A4 555**	11.000
ATV 71HD30N4…HD55N4 ATV 71WD30N4…WD55N4	22	0.3	100	–	260	1	**VW3 A4 556**	16.000
ATV 71HD75N4 ATV 71WD75N4	22	0.155	184	370	220	1	**VW3 A4 558**	31.000
ATV 71HD90N4, HC11N4	35	0.12	222	346	278	1	**VW3 A4 559**	35.000
ATV 71HC13N4	35	0.098	264	530	245	1	**VW3 A4 560**	43.000
ATV 71HC16N4	50	0.066	344	685	258	1	**VW3 A4 561**	47.000
ATV 71HC20N4	50	0.060	450	574	335	1	**VW3 A4 569**	70.000
ATV 71HC25N4, HC28N4	50	0.038	613	1150	307	1	**VW3 A4 564**	73.000
ATV 71HC31N4	50	0.032	720	1352	428	1	**VW3 A4 565**	82.000
ATV 71HC40N4	50	0.060	450	849	335	2	**VW3 A4 569**	70.000
ATV 71HC50N4	50	0.038	613	1150	307	2	**VW3 A4 564**	73.000
Three-phase supply voltage: 500…690 V 50/60 Hz								
ATV 71HU22Y…HU40Y *(2)*	22	10	4	–	45	1	**VW3 A4 551**	1.500
ATV 71HD55Y, HU75Y *(2)*	22	4	10	–	65	1	**VW3 A4 552**	3.000
ATV 71HD11Y, HD15Y *(2)*	22	2	16	–	75	1	**VW3 A4 553**	3.500
ATV 71HD18Y, HD22Y *(2)*	22	1	30	–	90	1	**VW3 A4 554**	6.000
ATV 71HD30Y…HD45Y *(2)*	22	0.5	60	–	94	1	**VW3 A4 555**	11.000
ATV 71HD55Y…HD90Y *(2)*	22	0.3	100	–	260	1	**VW3 A4 556**	16.000
ATV 71HC11Y *(1)*	28	0.22	160	320	220	1	**VW3 A4 570**	28.000
ATV 71HC13Y *(1)*	28	0.23	230	405	330	1	**VW3 A4 571**	79.000
ATV 71HC16Y *(1)*	35	0.23	230	405	330	1	**VW3 A4 571**	79.000
ATV 71HC20Y *(1)*	35	0.098	264	530	245	1	**VW3 A4 560**	35.000
ATV 71HC25Y, HC31Y *(1)*	35	0.1	450	770	495	1	**VW3 A4 572**	90.000
ATV 71HC40Y *(1)*	35	0.085	300	474	315	2	**VW3 A4 568**	46.000
ATV 71HC50Y *(1)*	35	0.1	450	770	495	2	**VW3 A4 572**	90.000
ATV 71HC63Y *(1)*	42	0.1	450	770	495	2	**VW3 A4 572**	90.000

(1) Use of a line choke is mandatory, to be ordered separately.
(2) Use of a line choke is recommended, to be ordered separately.

Presentation: pages 156 to 158
Characteristics: page 159
Dimensions: page 209
Schemes: pages 222 to 225

Variable speed drives

Altivar 71: reduction of current harmonics

Option: passive filters

Passive filters

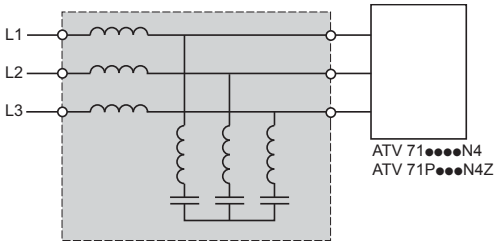

Passive filter

A passive filter is used to reduce current harmonics with total harmonic distortion factors of less than 16% or 10%. These ratios may be reduced to 10% or 5% if the filter is used with a DC choke, see pages 152 to 155.

The reactive power increases at no load or low load. To eliminate this reactive power, the filter capacitors can be disconnected via the drive, see page 233. To do this, the contactor must be controlled by one of the relay outputs on the drive, at a value lower than 10% of the nominal drive current (In) (please refer to the programming manual).

For ATV 71H●●●Y drives, use of a line choke is recommended or mandatory, depending on the rating.

Application

Reduction of current harmonics in order to use drives in the first environment.

General characteristics

Degree of protection			IP 20
Maximum relative humidity			Class F humidity without condensation 5%…85%
Ambient air temperature around the device	Operation	**°C**	5…+ 40 without derating
	Storage	**°C**	- 25…+ 55
Maximum operating altitude		**m**	1000 without derating

Electrical characteristics

Range		**400 V**	**460 V**
Nominal voltage ± 10%	**V**	380…415 ∿	440…480 ∿
Operating frequency		50 ± 5 %	60 ± 5 %
Overload capacity		1.5 x In (A)	
Efficiency		98% (2% thermal losses)	
THDI *(1)*	**%**	≤ 16	
Cos φ		At 75 % of the line current: 0.85 At 100 % of the line current: 0.99 At 150% of the line current: 1	

Connection characteristics

Maximum wire size	VW3 A4 601…604		16 mm²
	VW3 A4 605…609		50 mm²
	VW3 A4 610, 611		Connected on a bar, Ø 12.5
	VW3 A4 612, 613, 619		Connected on a bar, Ø 16.5
	VW3 A4 621, 622		16 mm²
	VW3 A4 623…627		50 mm²
	VW3 A4 628, 629		Connected on a bar, Ø 12.5
	VW3 A4 630…633, 639		Connected on a bar, Ø 16.5
	VW3 A4 641…644		16 mm²
	VW3 A4 645…648		50 mm²
	VW3 A4 649		Connected on a bar, Ø 12.5
	VW3 A4 650, 651, 656, 657		Connected on a bar, Ø 16.5
	VW3 A4 661…663		16 mm²
	VW3 A4 664…666		50 mm²
	VW3 A4 667, 668		Connected on a bar, Ø 12.5
	VW3 A4 669…671, 676, 677		Connected on a bar, Ø 16.5

(1) The total current harmonic distortion (THDI) is indicated for a total voltage harmonic distortion (THDU) < 2% and a short-circuit ratio (RSCE) > 66%, and only for the nominal current of the passive filter. If these conditions are not adhered to, the total current harmonics will be reduced without any guarantee of level.

References:
pages 162 to 165

Dimensions:
pages 210 and 211

Schemes:
pages 232 and 233

Variable speed drives

Altivar 71: reduction of current harmonics

Option: passive filters

Passive filters: three-phase power supply 400 V 50 Hz

Motor rating		For drives	Network Line current	Filter In (2)	Quantity per drive	Reference	Weight
kW	HP		A	A			kg
THDI 16% *(1)*							
0.75	1	ATV 71H075N4 ATV 71W075N4 ATV 71P075N4Z	2.5	6	1	**VW3 A4 601**	15.000
1.5	2	ATV 71HU15N4 ATV 71WU15N4 ATV 71PU15N4Z	3.6	6	1	**VW3 A4 601**	15.000
2.2	3	ATV 71HU22N4 ATV 71WU22N4 ATV 71PU22N4Z	5	6	1	**VW3 A4 601**	15.000
3	–	ATV 71HU30N4 ATV 71WU30N4 ATV 71PU30N4Z	6	6	1	**VW3 A4 601**	15.000
4	5	ATV 71HU40N4 ATV 71WU40N4 ATV 71PU40N4Z	7.8	10	1	**VW3 A4 602**	19.000
5.5	7.5	ATV 71HU55N4 ATV 71WU55N4 ATV 71PU55N4Z	10	10	1	**VW3 A4 602**	19.000
7.5	10	ATV 71HU75N4 ATV 71WU75N4 ATV 71PU75N4Z	14	19	1	**VW3 A4 603**	21.000
11	15	ATV 71HD11N4 ATV 71WD11N4 ATV 71PD11N4Z	19	19	1	**VW3 A4 603**	21.000
15	20	ATV 71HD15N4 ATV 71WD15N4	26	26	1	**VW3 A4 604**	22.000
18.5	25	ATV 71HD18N4 ATV 71WD18N4	32	35	1	**VW3 A4 605**	34.000
22	30	ATV 71HD22N4 ATV 71WD22N4	38	43	1	**VW3 A4 606**	38.000
30	40	ATV 71HD30N4 ATV 71WD30N4	52	72	1	**VW3 A4 607**	56.000
37	50	ATV 71HD37N4 ATV 71WD37N4	63	72	1	**VW3 A4 607**	56.000
45	60	ATV 71HD45N4 ATV 71WD45N4	77	101	1	**VW3 A4 608**	69.000
55	75	ATV 71HD55N4 ATV 71WD55N4	91	101	1	**VW3 A4 608**	69.000
75	100	ATV 71HD75N4 ATV 71WD75N4	126	144	1	**VW3 A4 609**	97.000
THDI 10%							
90	125	ATV 71HD90N4	149	144	1	**VW3 A4 609**	97.000
110	150	ATV 71HC11N4	182	180	1	**VW3 A4 610**	103.000
132	200	ATV 71HC13N4	218	216	1	**VW3 A4 611**	112.000
160	250	ATV 71HC16N4	287	289	1	**VW3 A4 612**	135.000
200	300	ATV 71HC20N4	353.5	370	1	**VW3 A4 613**	155.000
220	350	ATV 71HC25N4	364	370	1	**VW3 A4 613**	155.000
250	400	ATV 71HC25N4	415	216	2	**VW3 A4 611**	112.000
280	450	ATV 71HC28N4	485	289	2	**VW3 A4 612**	135.000
315	500	ATV 71HC31N4	543	289	2	**VW3 A4 612**	135.000
355	–	ATV 71HC40N4	588	289	2	**VW3 A4 612**	135.000
400	600	ATV 71HC40N4	664	325	2	**VW3 A4 619**	155.000
500	700	ATV 71HC50N4	840	289	3	**VW3 A4 612**	135.000

*(1) By adding a DC choke (see page 152) to **ATV 71●075N4…●D75N4** and **ATV 71P●●●N4Z** drives, a THD ≤ 10% is obtained.*
*This DC choke is supplied as standard with **ATV 71HD90N4…HC50N4** drives.*
These reduced current harmonics are obtained, only for the nominal filter current, on condition that the THDU is < 2% and the RSCE > 66%.
(2) In: nominal filter current.

Variable speed drives

Altivar 71: reduction of current harmonics

Option: passive filters

Passive filters: three-phase power supply 400 V 50 Hz

Motor rating		For drives	Network Line current	Filter In (2)	Quantity per drive	Reference	Weight
kW	HP		A	A			kg
THDI 10 % *(1)*							
0.75	1	ATV 71H075N4 ATV 71W075N4 ATV 71P075N4Z	2.5	6	1	**VW3 A4 621**	21.000
1.5	2	ATV 71HU15N4 ATV 71WU15N4 ATV 71PU15N4Z	3.6	6	1	**VW3 A4 621**	21.000
2.2	3	ATV 71HU22N4 ATV 71WU22N4 ATV 71PU22N4Z	5	6	1	**VW3 A4 621**	21.000
3	–	ATV 71HU30N4 ATV 71WU30N4 ATV 71PU30N4Z	6	6	1	**VW3 A4 621**	21.000
4	5	ATV 71HU40N4 ATV 71WU40N4 ATV 71PU40N4Z	7.8	10	1	**VW3 A4 622**	27.000
5.5	7.5	ATV 71HU55N4 ATV 71WU55N4 ATV 71PU55N4Z	10	10	1	**VW3 A4 622**	27.000
7.5	10	ATV 71HU75N4 ATV 71WU75N4 ATV 71PU75N4Z	14	19	1	**VW3 A4 623**	28.000
11	15	ATV 71HD11N4 ATV 71WD11N4 ATV 71PD11N4Z	19	19	1	**VW3 A4 623**	28.000
15	20	ATV 71HD15N4 ATV 71WD15N4	26	26	1	**VW3 A4 624**	40.000
18.5	25	ATV 71HD18N4 ATV 71WD18N4	32	35	1	**VW3 A4 625**	49.000
22	30	ATV 71HD22N4 ATV 71WD22N4	38	43	1	**VW3 A4 626**	52.000
30	40	ATV 71HD30N4 ATV 71WD30N4	52	72	1	**VW3 A4 627**	88.000
37	50	ATV 71HD37N4 ATV 71WD37N4	63	72	1	**VW3 A4 627**	88.000
45	60	ATV 71HD45N4 ATV 71WD45N4	77	101	1	**VW3 A4 628**	150.000
55	75	ATV 71HD55N4 ATV 71WD55N4	91	101	1	**VW3 A4 628**	150.000
75	100	ATV 71HD75N4 ATV 71WD75N4	126	144	1	**VW3 A4 629**	167.000
THDI 5 %							
90	125	ATV 71HD90N4	149	144	1	**VW3 A4 629**	167.000
110	150	ATV 71HC11N4	182	180	1	**VW3 A4 630**	178.000
132	200	ATV 71HC13N4	218	216	1	**VW3 A4 631**	224.000
160	250	ATV 71HC16N4	287	289	1	**VW3 A4 632**	271.000
200	300	ATV 71HC20N4	353.5	370	1	**VW3 A4 633**	320.000
220	350	ATV 71HC25N4	364	370	1	**VW3 A4 633**	320.000
250	400	ATV 71HC25N4	415	216	2	**VW3 A4 631**	224.000
280	450	ATV 71HC28N4	485	289	2	**VW3 A4 632**	271.000
315	500	ATV 71HC31N4	543	289	2	**VW3 A4 632**	271.000
355	–	ATV 71HC40N4	588	289	2	**VW3 A4 632**	271.000
400	600	ATV 71HC40N4	664	325	2	**VW3 A4 639**	284.000
500	700	ATV 71HC50N4	840	289	3	**VW3 A4 632**	271.000

*(1) By adding a DC choke (see page 152) to **ATV 71●075N4…●D75N4** and **ATV 71P●●●N4Z** drives, a THD ≤ 5% is obtained. This DC choke is supplied as standard with **ATV 71HD90N4…HC50N4** drives.*
These reduced current harmonics are obtained, only for the nominal filter current, on condition that the THDU is < 2% and the RSCE > 66%.
(2) In: nominal filter current.

Variable speed drives

Altivar 71: reduction of current harmonics

Option: passive filters

Passive filters: three-phase power supply 460 V 60 Hz

Motor rating		For drives	Network Line current	Filter In (2)	Quantity per drive	Reference	Weight
kW	HP		A	A			kg
THDI 16% (1)							
0.75	1	ATV 71H075N4 ATV 71W075N4 ATV 71P075N4Z	2.5	6	1	**VW3 A4 641**	15.000
1.5	2	ATV 71HU15N4 ATV 71WU15N4 ATV 71PU15N4Z	3	6	1	**VW3 A4 641**	15.000
2.2	3	ATV 71HU22N4 ATV 71WU22N4 ATV 71PU22N4Z	5	6	1	**VW3 A4 641**	15.000
3	–	ATV 71HU30N4 ATV 71WU30N4 ATV 71PU30N4Z	6	6	1	**VW3 A4 641**	15.000
4	5	ATV 71HU40N4 ATV 71WU40N4 ATV 71PU40N4Z	7	10	1	**VW3 A4 642**	19.000
5.5	7.5	ATV 71HU55N4 ATV 71WU55N4 ATV 71PU55N4Z	10	10	1	**VW3 A4 642**	19.000
7.5	10	ATV 71HU75N4 ATV 71WU75N4 ATV 71PU75N4Z	13	19	1	**VW3 A4 643**	23.000
11	15	ATV 71HD11N4 ATV 71WD11N4 ATV 71PD11N4Z	19	19	1	**VW3 A4 643**	23.000
15	20	ATV 71HD15N4 ATV 71WD15N4	24	26	1	**VW3 A4 644**	34.000
18.5	25	ATV 71HD18N4 ATV 71WD18N4	32	35	1	**VW3 A4 645**	42.000
22	30	ATV 71HD22N4 ATV 71WD22N4	35	35	1	**VW3 A4 645**	42.000
30	40	ATV 71HD30N4 ATV 71WD30N4	44	43	1	**VW3 A4 646**	45.000
37	50	ATV 71HD37N4 ATV 71WD37N4	58.7	72	1	**VW3 A4 647**	61.000
45	60	ATV 71HD45N4 ATV 71WD45N4	68	72	1	**VW3 A4 647**	61.000
55	75	ATV 71HD55N4 ATV 71WD55N4	82.6	101	1	**VW3 A4 648**	75.000
75	100	ATV 71 HD75N4 ATV 71 WD75N4	108	101	1	**VW3 A4 648**	75.000
THDI 10%							
90	125	ATV 71HD90N4	134	180	1	**VW3 A4 649**	107.000
110	150	ATV 71HC11N4	163	180	1	**VW3 A4 649**	107.000
132	200	ATV 71HC13N4	192	217	1	**VW3 A4 656**	119.000
160	250	ATV 71HC16N4	235	289	1	**VW3 A4 650**	145.000
200	300	ATV 71HC20N4	300	370	1	**VW3 A4 651**	185.000
220	350	ATV 71HC25N4	330	370	1	**VW3 A4 651**	185.000
250	400	ATV 71HC25N4	400	217	2	**VW3 A4 656**	119.000
280	450	ATV 71HC28N4	440	289	2	**VW3 A4 650**	145.000
315	500	ATV 71HC31N4	470	289	2	**VW3 A4 650**	145.000
355	–	ATV 71HC40N4	530	289	2	**VW3 A4 650**	145.000
400	600	ATV 71HC40N4	590	325	2	**VW3 A4 657**	165.000
500	700	ATV 71HC50N4	730	370	2	**VW3 A4 651**	185.000

*(1) By adding a DC choke (see page 152) to **ATV 71●075N4…●D75N4** and **ATV 71P●●●N4Z**drives, a THD ≤ 10% is obtained.This DC choke is supplied as standard with **ATV 71HD90N4…HC50N4** drives.*
These reduced current harmonics are obtained, only for the nominal filter current, on condition that the THDU is < 2% and the RSCE > 66%.
(2) In: nominal filter current.

Variable speed drives

Altivar 71: reduction of current harmonics

Option: passive filters

Passive filters: three-phase power supply 460 V 60 Hz

Motor rating		For drives	Network Line current	Filter In (2)	Quantity per drive	Reference	Weight
kW	HP		A	A			kg
THDI 10% (1)							
0.75	1	ATV 71H075N4 ATV 71W075N4 ATV 71P075N4Z	2.5	6	1	**VW3 A4 661**	21.000
1.5	2	ATV 71HU15N4 ATV 71WU15N4 ATV 71PU15N4Z	3	6	1	**VW3 A4 661**	21.000
2.2	3	ATV 71HU22N4 ATV 71WU22N4 ATV 71PU22N4Z	4.2	6	1	**VW3 A4 661**	21.000
3	–	ATV 71HU30N4 ATV 71WU30N4 ATV 71PU30N4Z	6	6	1	**VW3 A4 661**	21.000
4	5	ATV 71HU40N4 ATV 71WU40N4 ATV 71PU40N4Z	7	10	1	**VW3 A4 662**	27.000
5.5	7.5	ATV 71HU55N4 ATV 71HU55N4 ATV 71PU55N4Z	10	10	1	**VW3 A4 662**	27.000
7.5	10	ATV 71HU75N4 ATV 71WU75N4 ATV 71PU75N4Z	13	19	1	**VW3 A4 663**	28.000
11	15	ATV 71HD11N4 ATV 71WD11N4 ATV 71PD11N4Z	19	19	1	**VW3 A4 663**	28.000
15	20	ATV 71HD15N4 ATV 71WD15N4	24	26	1	**VW3 A4 664**	41.000
18.5	25	ATV 71HD18N4 ATV 71WD18N4	32	35	1	**VW3 A4 665**	49.000
22	30	ATV 71HD22N4 ATV 71WD22N4	35	35	1	**VW3 A4 665**	49.000
30	40	ATV 71HD30N4 ATV 71WD30N4	44	43	1	**VW3 A4 666**	56.000
37	50	ATV 71HD37N4 ATV 71WD37N4	58.7	72	1	**VW3 A4 667**	80.000
45	60	ATV 71HD45N4 ATV 71WD45N4	68	72	1	**VW3 A4 668**	98.000
55	75	ATV 71HD55N4 ATV 71WD55N4	82.6	101	1	**VW3 A4 668**	98.000
75	100	ATV 71HD75N4 ATV 71WD75N4	108	101	1	**VW3 A4 668**	98.000
THDI 5 %							
90	125	ATV 71HD90N4	134	180	1	**VW3 A4 669**	151.000
110	150	ATV 71HC11N4	163	180	1	**VW3 A4 669**	151.000
132	200	ATV 71HC13N4	192	217	1	**VW3 A4 676**	171.000
160	250	ATV 71HC16N4	235	289	1	**VW3 A4 670**	215.000
200	300	ATV 71HC20N4	300	370	1	**VW3 A4 671**	250.000
220	350	ATV 71HC25N4	330	370	1	**VW3 A4 671**	250.000
250	400	ATV 71HC25N4	400	217	2	**VW3 A4 676**	171.000
280	450	ATV 71HC28N4	440	289	2	**VW3 A4 670**	215.000
315	500	ATV 71HC31N4	470	289	2	**VW3 A4 670**	215.000
355	–	ATV 71HC40N4	530	289	2	**VW3 A4 670**	215.000
400	600	ATV 71HC40N4	590	325	2	**VW3 A4 677**	240.000
500	700	ATV 71HC50N4	730	370	2	**VW3 A4 671**	250.000

*(1) By adding a DC choke (see page 152) to **ATV 71●075N4...●D75N4** and **ATV 71P●●●N4Z** drives, a THD ≤ 5% is obtained. This DC choke is supplied as standard with **ATV 71HD90N4...HC50N4** drives.*
These reduced current harmonics are obtained, only for the nominal filter current, on condition that the THDU is < 2% and the RSCE > 66%.
(2) In: nominal filter current.

Variable speed drives

Altivar 71: EMC filters

Integrated filters and optional additional filters

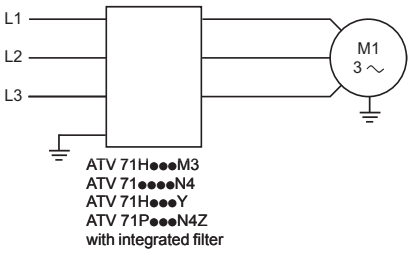

Integrated EMC filters

Altivar 71 drives, except for the ATV 71H●●●M3X, have built-in radio interference input filters to meet the EMC standard for variable speed electrical power drive "products" IEC/EN 61800-3, edition 2, category C2 or C3 in environment 1 or 2 and to comply with the European directive on EMC (electromagnetic compatibility).

Drives	Maximum length of shielded cable *(1)* according to			
	EN 55011 *(2)* class A Gr1		EN 55011 *(2)* class A Gr2	
	IEC/EN 61800-3 category C2 *(2)*		IEC/EN 61800-3 category C3 *(2)*	
	LF *(3)*	HF *(3)*	LF *(3)*	HF *(3)*
	m	m	m	m
ATV 71H037M3…HU22M3	10	5	–	–
ATV 71HU30M3…HU75M3	–	–	10	5
ATV 71H075N4…HU40N4 ATV 71W075N4…WU40N4 ATV 71P075N4Z…PU40N4Z	10	5	–	–
ATV 71HU55N4…HD15N4 ATV 71WU55N4…WD15N4 ATV 71PU55N4Z…PD11N4Z	–	–	10	5
ATV 71HD18N4…HC50N4 ATV 71WD18N4…WD75N4	–	–	50	25
ATV 71HU22Y…HD90Y	–	–	25	25
ATV 71HC11Y…HC63Y	–	–	50	25

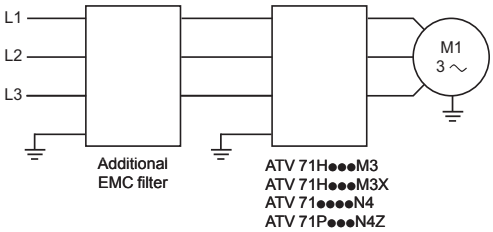

Additional EMC input filters

Applications

When used with ATV 71H●●●M3, ATV 71H●●●M3X, ATV 71●●●●N4 and ATV 71P●●●N4Z drives, additional EMC input filters can be used to meet more stringent requirements and are designed to reduce conducted emissions on the line supply below the limits of standards EN 55011 group 1, class A or B and IEC/EN 61800/3 category C2 or C3 (see page 10).
For ATV 71H●●●M3, ATV 71HD11M3X…HD45M3X, ATV 71H075N4…HD75N4 and ATV 71P075N4Z…PD11N4Z drives, the additional EMC filters can be mounted beside or under the device. They act as a support for the drives and are attached to them via tapped holes.
For ATV 71HD55M3X, HD75M3X and ATV 71HD90N4…HC50N4 drives, the additional EMC filters can only be mounted beside the drive.

Use according to the type of line supply

Use of these additional filters is only possible on TN (connected to neutral) and TT (neutral to earth) type networks.
Standard IEC/EN 61800-3, appendix D2.1, states that on IT networks (isolated or impedance earthed neutral), filters can cause permanent insulation monitors to operate in a random manner.
In addition, the effectiveness of additional filters on this type of network depends on the type of impedance between neutral and earth, and therefore cannot be predicted.
In the case of a machine which needs to be installed on an IT network, the solution would be to insert an isolation transformer and place the machine locally on a TN or TT network.

(1) Maximum lengths for shielded cables connecting motors to drives, for a factory-set switching frequency of 2.5 or 4 kHz depending on the rating see page 12. If motors are connected in parallel, it is the sum of the cable lengths that should be taken into account.
(2) See page 10.
(3) LF: low switching frequency. HF: high switching frequency. These frequencies depend on the drive rating:

For drives	Switching frequency	
	LF	HF
	kHz	kHz
ATV 71H●●●M3 ATV 71H075N4…HD30N4 ATV 71W075N4…WD30N4 ATV 71P075N4Z…PD11N4Z	4	4.1…16
ATV 71HD37N4…HD75N4 ATV 71WD37N4…WD75N4	2…2.5	2.6…12
ATV 71HD90N4…HC50N4	2…4	4.1…
ATV 71HU22Y…HD30Y	2.5…4	4.1…6
ATV 71HD37Y…HD63Y	2.5	2.6…4.9

Characteristics: page 167
References: pages 168 and 169
Dimensions: pages 212 and 213
Schemes: page 231

Variable speed drives

Altivar 71: EMC filters

Option: additional input filters

General characteristics

EMC filter type			VW3 A4 401…408	VW3 A4 410…413
Conformity to standards			EN 133200	
Degree of protection			IP 20 and IP 41 on upper part	IP 00 IP 30 with kits VW3 A9 601, 602
Maximum relative humidity			93% without condensation or dripping water conforming to IEC 68-2-3	
Ambient air temperature around the device	Operation	°C	- 10…+ 50	- 25…+ 45
	Storage	°C	- 40…+ 65	- 25…+ 85
Maximum operating altitude		m	1000 without derating 1000…3000 derating the current by 1% per additional 100 m. Limited to 2000 m for the “Corner Grounded” distribution network.	
Vibration resistance			1.5 mm peak to peak from 3…13 Hz, 1 gn peak from 13…150 Hz, in accordance with IEC 60068-2-6	
Shock resistance			15 gn for 11 ms conforming to IEC 60068-2-27	
Maximum nominal voltage	50/60 Hz three-phase	V	240 + 10 % 480 + 10 %	

Connection characteristics

Maximum wire size and tightening torque	VW3 A4 401		4 mm² (AWG 10) 0.6 Nm
	VW3 A4 402		6 mm² (AWG 8) 1.5 Nm
	VW3 A4 403		10 mm² (AWG 6) 1.5 Nm
	VW3 A4 404		16 mm² (AWG 4) 2 Nm
	VW3 A4 405…407		50 mm² (AWG 0) 6 Nm
	VW3 A4 408		150 mm² (300 kcmil) 25 Nm
	VW3 A4 409		25 mm² (AWG 2) 4 Nm
	VW3 A4 410…412		Connected on a bar, M10 –
	VW3 A4 413		Connected on a bar, 2 x M12 –

Variable speed drives

Altivar 71: EMC filters

Option: additional input filters

Additional EMC input filters

Drives	Maximum length of shielded cable (1)				In (2)	If (3)	Loss (4)	Reference	Weight
	EN 55011 (5) class A Gr1		EN 55011 (5) class B Gr1						
	IEC/EN 61800-3 category C2 (5)		IEC/EN 61800-3 category C1 (5)						
	LF (6)	HF (6)	LF (6)	HF (6)					
	m	m	m	m	A	mA	W		kg
Three-phase supply voltage: 200…240 V 50/60 Hz									
ATV 71H037M3…HU15M3	100	50	50	20	12	4	10	**VW3 A4 401**	2.200
ATV 71HU22M3…HU40M3	100	50	50	20	26	4.4	18	**VW3 A4 402**	4.000
ATV 71HU55M3	100	50	50	20	35	3	24	**VW3 A4 403**	5.800
ATV 71HU75M3	100	50	50	20	46	10	19	**VW3 A4 404**	7.000
ATV 71HD11M3X, HD15M3X	100	50	50	25	72	33	34	**VW3 A4 405**	12.000
ATV 71HD18M3X, HD22M3X	100	50	50	25	90	33	34	**VW3 A4 406**	15.000
ATV 71HD30M3X...HD45M3X	100	50	50	25	180	80	58	**VW3 A4 408**	40.000
ATV 71HD55M3X, HD75M3X	100	50	50	25	273	285	60	**VW3 A4 410**	22.000
Three-phase supply voltage: 380…480 V 50/60 Hz									
ATV 71H075N4…HU22N4 ATV 71W075N4…WU22N4 ATV 71P075N4Z…PU22N4Z	100	50	50	20	12	7	5	**VW3 A4 401**	2.200
ATV 71HU30N4, HU40N4 ATV 71WU30N4, WU40N4 ATV 71PU30N4Z, PU40N4Z	100	50	50	20	26	8	6	**VW3 A4 402**	4.000
ATV 71HU55N4, HU75N4 ATV 71WU55N4,WU75N4 ATV 71PU55N4Z, PU75N4Z	100	50	50	20	35	7	14	**VW3 A4 403**	5.800
ATV 71HD11N4 ATV 71WD11N4 ATV 71PD11N4Z	100	50	50	20	46	14	13	**VW3 A4 404**	7.000
ATV 71HD15N4 (7), HD18N4 ATV 71WD15N4 (7), WD18N4	300	200	100	100	72	60	14	**VW3 A4 405**	12.000
ATV 71HD22N4 ATV 71WD22N4	300	200	100	100	90	60	11	**VW3 A4 406**	15.000
ATV 71HD30N4, HD37N4 ATV 71WD30N4, WD37N4	300	200	100	100	92	60	30	**VW3 A4 407**	17.000
ATV 71HD45N4…HD75N4 ATV 71WD45N4…WD75N4	300	200	100	100	180	140	58	**VW3 A4 408**	40.000
ATV 71HD90N4…HC13N4	300	150	50	25	273	500	60	**VW3 A4 410**	22.000
ATV 71HC16N4…HC28N4	300	150	50	25	546	500	125	**VW3 A4 411**	25.000
ATV 71HC31...HC40N4	300	150	50	25	728	500	210	**VW3 A4 412**	25.000
ATV 71HC50N4	300	150	50	25	1456	200	380	**VW3 A4 413**	34.000

(1) The filter selection tables give the maximum lengths for shielded cables connecting motors to drives for a switching frequency of 1 to 16 kHz (see page 12). These limits are given as examples only as they vary depending on the stray capacitance of the motors and the cables used. If motors are connected in parallel, it is the sum of the cable lengths that should be taken into account.
(2) Filter nominal current.
(3) Maximum earth leakage current at 230 V and at 400 V 50 Hz on a TT network.
(4) Via thermal dissipation.
(5) See page 10.
(6) LF: low switching frequency. HF: high switching frequency. These frequencies depend on the drive rating:

For drives	Switching frequency	
	LF	HF
	kHz	kHz
ATV 71H●●●M3 ATV 71H075N4…HD11N4 ATV 71W075N4…WD11N4 ATV 71P075N4Z…PD11N4Z	4	4.1…16
ATV 71HD11M3X, HD15M3X ATV 71HD15N4…HD30N4 ATV 71WD15N4…WD30N4	3.5...4	4.1…12
ATV 71HD18M3X...HD45M3X ATV 71HD37N4...HD75N4 ATV 71WD37N4…WD75N4	2…2.5	2.6…12
ATV 71HD55M3X, HD75M3X	2…4	4.1…8
ATV 71HD90N4...HC50N4	2…4	4.1…8

*(7) It is possible to use a special filter **VW3 A4 409** with a leakage current II (3) of 14 mA which enables a maximum motor cable length of 100 m.*

Presentation: page 166
Characteristics: page 167
Dimensions: pages 212 and 213
Schemes: page 231

Variable speed drives

Altivar 71: EMC filters

Option: additional input filters

IP 30 protection kits			
Description	**For filters**	**Reference**	**Weight kg**
Mechanical device consisting of an IP 30 cover and cable clips	VW3 A4 410, 411	**VW3 A9 601**	–
	VW3 A4 412, 413	**VW3 A9 602**	–

Variable speed drives
Altivar 71: output filters

The Altivar 71 drive includes as standard a software function used to limit overvoltages at the motor terminals.
Depending on the cable lengths or the type of application, it may be necessary to use output filters:
- Motor chokes used to limit the dv/dt
- Sinus filters that are particularly effective for long cable runs

Cable length *(2) (3)*	**10…50 m**	**50…100 m**	**100…150 m**	**150…300 m**	**300…600 m**	**600…1000 m**
Shielded cable						
ATV 71H●●●M3 ATV 71H075N4…HD15N4 ATV 71W075N4…WD15N4 ATV 71P075N4Z…PD11N4Z	Software function *(1)*	Motor choke			–	
ATV 71H●●●M3X ATV 71HD18N4…HC50N4 ATV 71WD18N4…WD75N4	Software function *(1)*		Motor choke		–	
Unshielded cable						
ATV 71H037M3...HU15M3 ATV 71H075N4...HU22N4 ATV 71W075N4…WU22N4 ATV 71P075N4Z…PU22N4Z	Software function *(1)*		Motor choke or sinus filter		–	
ATV 71HU22M3, HU30M3 ATV 71HU30N4…HU55N4 ATV 71PU30N4Z…PU55N4Z ATV 71WU30N4…WU55N4	Software function *(1)*		Motor choke		Sinus filter	–
ATV 71HU40M3…HU75M3 ATV 71HU75N4…HD15N4 ATV 71WU75N4…WD15N4 ATV 71PU75N4Z	Software function *(1)*		Motor choke		Sinus filter	
ATV 71HD11M3X…HD45M3X ATV 71HD18N4…HD75N4 ATV 71WD18N4…WD75N4	Software function *(1)*			Motor choke	Sinus filter	
ATV 71HD55M3X…HD75M3X ATV 71HD90N4…HC50N4	Software function *(1)*			Motor choke	2 motor chokes in series	–

(1) The software function limits the overvoltage at the motor terminals to twice the DC bus voltage.
For any application with braking cycles, the DC bus voltage rises to more than the supply voltage multiplied by √2.
You must check the electrical characteristics of the motor before using this function.
(2) The cable length varies depending on the combination of variable speed drive/motor choke or sinus filter, see pages 172, 173 and 175.
For an application with several motors connected in parallel, the cable length must include all cabling.
Recommended cable types:
- *Shielded cables: "GORSE" cable, type GUOSTV-LS/LH; "PROTOFLEX" cable, type EMV2YSL CY,*
- *Unshielded cables: "GORSE" cable, type H07 RN-F4GXX; "BELDEN" cable, type 2950X.*

(3) ATV 71H●●●Y drives:
- *In combination with motor choke, see page 173,*
- *In combination with sinus filter or if software function used, please consult your Regional Sales Office.*

Schemes :
page 231

Variable speed drives

Altivar 71: output filters

Option: motor chokes

Motor chokes

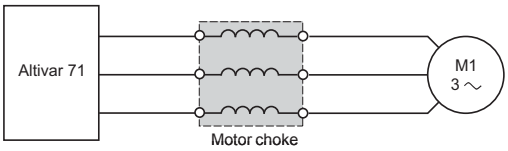

Altivar 71 drives have been developed to operate with the following maximum motor cable lengths:

For drives	Maximum length of motor cable *(1)*	
	Shielded cable	Unshielded cable
	m	m
ATV 71H●●●M3 ATV 71HD11M3X, HD15M3X ATV 71H075N4…HD18N4 ATV 71W075N4…WD18N4 ATV 71P075N4Z…PU75N4Z	50	100
ATV 71HD18M3X…HD75M3X ATV 71HD22N4…HC50N4 ATV 71WD22N4…WD75N4	100	200
ATV 71HU22Y…HD90Y	10	10
ATV 71HC11Y…HC63Y	15	30

The motor choke enables operation with motor cables above these maximum lengths and/or limits the dv/dt at the motor terminals to:
- 500 V/µs, for three-phase line supplies of 200…400 V and 380…480 V,
- 1000 V/µs, for three-phase line supplies of 500…690 V.

It is also used to:
- Limit overvoltages on the motor terminals to:
  - 1000 V at 400 V ∿ (rms value),
  - 1150 V at 460 V ∿ (rms value),
  - 1800 V at 690 V ∿ (rms value),
- Filter interference caused by opening a contactor placed between the filter and the motor,
- Reduce the motor earth leakage current.

General characteristics *(2)*

Type of choke			VW3 A5 101…103	VW3 A5 104…108
Drive switching frequency	ATV 71H●●●M3 ATV 71HD11M3X, HD15M3X ATV 71H075N4…HD30N4 ATV 71HU22Y…HD30Y ATV 71W075N4…WD30N4 ATV 71P075N4Z…PU75N4Z	**kHz**	4	
	ATV 71HD18M3X…HD75M3X ATV 71HD37N4…HC50N4 ATV 71HD37Y…HC63Y ATV 71WD37N4…WD75N4	**kHz**	2.5	
Maximum drive output frequency		**Hz**	100	
Degree of protection			IP 00	IP 00 IP 20 with kits VW3 A9 612 and VW3 A9 613
Thermal protection			By temperature controlled switch	–
Temperature controlled switch *(3)*	Activation temperature	**°C**	125	–
	Maximum voltage	**V**	250∿	–
	Maximum current	**A**	0.5	–
Ambient air temperature around the device	Operation	**°C**	- 10…+ 50	
	Storage	**°C**	- 25…+ 70	

Connection characteristics

Maximum wire size and tightening torque	VW3 A5 101, 102		10 mm² (AWG 6) 1.5 Nm
	VW3 A5 103		Connected on a bar, Ø 9 mm –
	VW3 A5 104, 105		Connected on a tag connector, M10 –
	VW3 A5 106, 107		Connected on a tag connector, 2 x M12 –
	VW3 A5 108		Connected on a tag connector, 3 x M12 –

(1) These values are given for a switching frequency of 2.5 or 4 kHz depending on the rating.
(2) Choke performance is ensured by not exceeding the above cable lengths. For an application with several motors connected in parallel, the cable length must include all cabling. If a cable longer than that recommended is used, the motor chokes may overheat.
(3) The contact should be connected in the sequence (use for signalling or controlling the line contactor).

References: pages 172 and 173
Dimensions: pages 214 to 216
Schemes: page 231

Variable speed drives

Altivar 71: output filters

Option: motor chokes

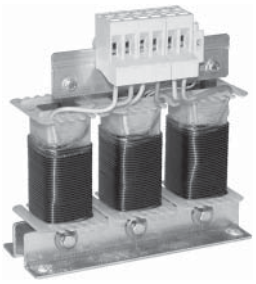

VW3 A5 101

Motor chokes

For drives		Maximum length of motor cable (1) Shielded	Maximum length of motor cable (1) Un-shielded	Loss	Nominal current	Sold in lots of	Reference	Weight
		m	m	W	A			kg
Three-phase supply voltage: 200…240 V 50/60 Hz								
ATV 71H037M3…HU22M3		150	300	150	12	–	**VW3 A5 101**	5.500
ATV 71HU30M3…HU75M3		200	260	250	48	–	**VW3 A5 102**	8.000
		300	300	350	90	–	**VW3 A5 103**	10.000
ATV 71HD11M3X…HD22M3X		150	300	350	90	–	**VW3 A5 103**	10.000
ATV 71HD30M3X…HD45M3X		150	300	430	215	3	**VW3 A5 104**	15.500
ATV 71HD55M3X, HD75M3X		150	300	475	314	3	**VW3 A5 105**	32.000
Three-phase supply voltage: 380...480 V 50/60 Hz								
ATV 71H075N4…HU40N4 ATV 71W075N4…WU40N4 ATV 71P075N4Z…PU40N4Z		75	90	150	12	–	**VW3 A5 101**	5.500
		85	95	250	48	–	**VW3 A5 102**	8.000
		160	200	350	90	–	**VW3 A5 103**	10.000
ATV 71HU55N4…HD18N4 ATV 71WU55N4…WD18N4 ATV 71PU55N4Z…PD11N4Z		85	95	250	48	–	**VW3 A5 102**	8.000
		160	200	350	90	–	**VW3 A5 103**	10.000
		200	300	430	215	3	**VW3 A5 104**	15.500
ATV 71HD22N4, HD30N4 ATV 71WD22N4, WD30N4		140	170	350	90	–	**VW3 A5 103**	10.000
		150	300	430	215	3	**VW3 A5 104**	15.500
ATV 71HD37N4 ATV 71WD37N4		97	166	350	90	–	**VW3 A5 103**	10.000
		200	300	430	215	3	**VW3 A5 104**	15.500
ATV 71HD45N4…HD75N4 ATV 71WD45N4…WD75N4		150	300	430	215	3	**VW3 A5 104**	15.500
ATV 71HD90N4		200	300	430	215	3	**VW3 A5 104**	15.500
ATV 71HC11N4, HC13N4		150	250	475	314	3	**VW3 A5 105**	32.000
ATV 71HC16N4, HC20N4		250	300	530	481	3	**VW3 A5 106**	58.000
ATV 71HC25N4	Motor P 220 kW	250	300	530	481	3	**VW3 A5 106**	58.000
	Motor P 250 kW	200	250	598	759	3	**VW3 A5 107**	93.000
ATV 71HC28N4, HC31N4		200	250	598	759	3	**VW3 A5 107**	93.000
ATV 71HC40N4	Motor P 355 kW	200	250	598	759	3	**VW3 A5 107**	93.000
	Motor P 400 kW	250	300	682	1188	3	**VW3 A5 108**	120.000
ATV 71HC50N4		250	300	682	1188	3	**VW3 A5 108**	120.000

(1) Maximum length given for a switching frequency of 2.5 or 4 kHz depending on the drive rating, see characteristics on page 171.

Variable speed drives

Altivar 71: output filters

Option: motor chokes

Motor chokes (continued)

For drives	Maximum length of motor cable (1) Shielded	Maximum length of motor cable (1) Un-shielded	Loss	Nominal current	Sold in lots of	Reference	Weight
	m	m	W	A			kg
Three-phase supply voltage: 500…690 V 50/60 Hz							
ATV 71HU22Y…HU75Y	36	44	150	12	–	**VW3 A5 101**	5.500
	41	46	250	48	–	**VW3 A5 102**	8.000
	77	97	350	90	–	**VW3 A5 103**	10.000
ATV 71HD11Y…HD30Y	41	46	250	48	–	**VW3 A5 102**	8.000
	77	97	350	90	–	**VW3 A5 103**	10.000
	97	145	430	215	3	**VW3 A5 104**	15.500
ATV 71HD37Y…HD55Y	68	82	350	90	–	**VW3 A5 103**	10.000
	73	145	430	215	3	**VW3 A5 104**	15.500
ATV 71HD75Y…HD90Y	73	145	430	215	3	**VW3 A5 104**	15.500
ATV 71HC11Y, HC13Y	50	250	430	215	3	**VW3 A5 104**	15.500
ATV 71HC16Y, HC20Y	50	250	475	314	3	**VW3 A5 105**	32.000
ATV 71HC25Y, HC31Y	50	250	530	759	3	**VW3 A5 106**	58.000
ATV 71HC40Y, HC50Y	50	250	598	759	3	**VW3 A5 107**	93.000
ATV 71HC63Y	50	250	682	1188	3	**VW3 A5 108**	120.000

IP 20 protection kits

Description	For chokes	Reference	Weight kg
Mechanical kit including an IP 20 cover and cable clamps	VW3 A5 104, 105	**VW3 A9 612**	–
	VW3 A5 106…108	**VW3 A9 613**	–

(1) Maximum length given for:
- A switching frequency of 2.5 or 4 kHz depending on the drive rating, see characteristics on page 171
- A three-phase 690 V 50 Hz line supply voltage.

Variable speed drives

Altivar 71: output filters

Option: sinus filters

Sinus filters

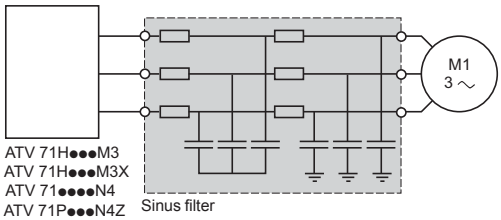

Sinus filters allow Altivar 71 drives to operate with longer motor cables (up to 1000 m).
For ATV 71H075M3…HD45M3X, ATV 71●U15N4...●D75N4 and ATV 71P●●●N4Z drives, they also allow the use of unshielded cables while still complying with the standards on radiated EMC emissions (EN55011 class A Gr1 and IEC/EN 61800-3 category C2).

For ATV 71HD55M3X, HD75M3X and ATV 71HD90N4…HC50N4 drives, the sinus filter only operates with a voltage/frequency drive ratio.

The sinus filter is never compatible with the current Flux Vector Control with sensor ratio.

Note: *The Programming Manual must be referred to when setting up the sinus filter.*

Applications

For ATV 71H075M3…HD45M3X, ATV 71●U15N4... ●D75N4 and ATV 71P●●●N4Z drives, applications requiring:
- Long cable runs
- Mechanical restrictions preventing the use of shielded cables
- An intermediate transformer between the drive and the motor
- Motors connected in parallel.

For ATV 71HD55M3X, HD75M3X and ATV 71HD90N4...HC50N4 drives, applications requiring:
- An intermediate transformer between the drive and the motor.

General characteristics

Type of choke			VW3 A5 201…206	VW3 A5 207…211
Degree of protection			IP 20	IP 00
Atmospheric pollution			3C2, 3B1, 3S1 conforming to IEC 721.3.3	
Degree of pollution			2 conforming to standard EN 50178	
Vibration resistance			1.5 mm from 3...13 Hz, 1 gn from 13...200 Hz, conforming to IEC 60068-2	
Shock resistance			15 gn for 11 ms conforming to IEC 60068-2-27	
Maximum relative humidity			95 %	
Ambient air temperature around the device	Operation	**°C**	- 10...+ 40 without derating From 40...50°C with current derating of 1.5% per additional °C	
	Storage	**°C**	- 40…+ 65	
Maximum operating altitude		**m**	1000 without derating From 1000…3000 with current derating of 1% per additional 100 m	
Switching frequency		**kHz**	4...8	
Output frequency		**Hz**	0...100	
Voltage drop			< 10 %	
Maximum voltage		**V**	500∼	
Maximum current			1.5 x nominal current for 60 s	
Maximum length of motor cable	Unshielded cable	**m**	600 or 1000 depending on the drive rating, see page 170	

Connection characteristics

Maximum wire size and tightening torque	VW3 A5 201		4 mm² (AWG 10) 0.6 Nm
	VW3 A5 202		6 mm² (AWG 8) 1.5 Nm
	VW3 A5 203		10 mm² (AWG 6) 1.5 Nm
	VW3 A5 204		25 mm² (AWG 2) 4 Nm
	VW3 A5 205		50 mm² (AWG 0) 6 Nm
	VW3 A5 206, 207		95 mm² (AWG 4/0) 20 Nm
	VW3 A5 208, 209		Connected on a bar, Ø 11 mm –
	VW3 A5 210		Connected on a bar, Ø 14 mm –
	VW3 A5 211		Connected on a bar, 4 x Ø 11 mm –

References: page 175
Dimensions: page 217
Schemes: page 231

Variable speed drives

Altivar 71: output filters

Option: sinus filters

Sinus filters

For drives		Nominal current	Loss at 100 Hz	Reference	Weight
		A	W		kg
Three-phase supply voltage: 200…240 V 50/60 Hz					
ATV 71H075M3, HU15M3 *(1)*		11	50	**VW3 A5 201**	8.000
ATV 71HU22M3, HU30M3		16	70	**VW3 A5 202**	11.000
ATV 71HU40M3... HU75M3		33	120	**VW3 A5 203**	22.000
ATV 71HD11M3X, HD15M3X		66	180	**VW3 A5 204**	45.000
ATV 71HD18M3X, HD22M3X		95	250	**VW3 A5 205**	60.000
ATV 71HD30M3X... HD45M3X		180	400	**VW3 A5 206**	120.000
ATV 71HD55M3X, HD75M3X		300	1360	**VW3 A5 208**	165.000
Three-phase supply voltage: 380…480 V 50/60 Hz					
ATV 71HU15N4...HU40N4 *(1)* ATV 71WU15N4…WU40N4 ATV 71PU15N4Z…PU40N4Z		11	50	**VW3 A5 201**	8.000
ATV 71HU55N4 ATV 71WU55N4 ATV 71PU55N4Z		16	70	**VW3 A5 202**	11.000
ATV 71HU75N4...HD15N4 ATV 71WU75N4…WD15N4 ATV 71PU75N4Z, PD11N4Z		33	120	**VW3 A5 203**	22.000
ATV 71HD18N4... HD30N4 ATV 71WD18N4…WD30N4		66	180	**VW3 A5 204**	45.000
ATV 71HD37N4, HD45N4 ATV 71WD37N4, WD45N4		95	250	**VW3 A5 205**	60.000
ATV 71HD55N4, HD75N4 ATV 71WD55N4, WD75N4		180	400	**VW3 A5 206**	120.000
ATV 71HD90N4, HC11N4		200	945	**VW3 A5 207**	130.000
ATV 71HC13N4, HC16N4		300	1360	**VW3 A5 208**	165.000
ATV 71HC20N4		400	1900	**VW3 A5 209**	190.000
ATV 71HC25N4	Motor P 220 kW	400	1900	**VW3 A5 209**	190.000
	Motor P 250 kW	600	2370	**VW3 A5 210**	260.000
ATV 71HC28N4, HC31N4		600	2370	**VW3 A5 210**	260.000
ATV 71HC40N4	Motor P 355 kW	600	2370	**VW3 A5 210**	260.000
	Motor P 400 kW	1200	5150	**VW3 A5 211**	600.000
ATV 71HC50N4		1200	5150	**VW3 A5 211**	600.000

(1) For ATV 71H075M3, ATV 71HU15M3 and ATV 71HU15N4 drives, it is advisable to use a lower category of motor with a sinus filter.

Presentation: pages 170 and 174
Characteristics: page 174
Dimensions: page 217
Schemes: page 231

Table showing possible combinations of ATV 71H●●●M3 and ATV 71H●●●M3X drive options *(1)*

Motor		Drive	Options				
kW	*HP*		DC choke	Line choke	Additional EMC input filter	Motor choke	IP 20 motor choke kit
Single-phase supply voltage: 200…240 V 50/60 Hz							
0.37	*0.5*	**ATV 71H075M3**	–	–	VW3 A4 401	VW3 A5 101	–
0.75	*1*	**ATV 71HU15M3**	–	–	VW3 A4 401	VW3 A5 101	–
1.5	*2*	**ATV 71HU22M3**	–	–	VW3 A4 402	VW3 A5 101	–
2.2	*3*	**ATV 71HU30M3**	–	–	VW3 A4 402	VW3 A5 102, 103	–
3	–	**ATV 71HU40M3**	–	VW3 A58 501	VW3 A4 402	VW3 A5 102, 103	–
4	*5*	**ATV 71HU55M3**	–	VW3 A58 502	VW3 A4 403	VW3 A5 102, 103	–
5.5	*7.5*	**ATV 71HU75M3**	–	VW3 A58 502	VW3 A4 404	VW3 A5 102, 103	–
Three-phase supply voltage: 200…240 V 50/60 Hz							
0.37	*0.5*	**ATV 71H037M3**	VW3 A4 501	VW3 A4 551	VW3 A4 401	VW3 A5 101	–
0.75	*1*	**ATV 71H075M3**	VW3 A4 503	VW3 A4 551	VW3 A4 401	VW3 A5 101	–
1.5	*2*	**ATV 71HU15M3**	VW3 A4 505	VW3 A4 552	VW3 A4 401	VW3 A5 101	–
2.2	*3*	**ATV 71HU22M3**	VW3 A4 506	VW3 A4 552	VW3 A4 402	VW3 A5 101	–
3	–	**ATV 71HU30M3**	VW3 A4 507	VW3 A4 553	VW3 A4 402	VW3 A5 102, 103	–
4	*5*	**ATV 71HU40M3**	VW3 A4 508	VW3 A4 554	VW3 A4 402	VW3 A5 102, 103	–
5.5	*7.5*	**ATV 71HU55M3**	VW3 A4 508	VW3 A4 554	VW3 A4 403	VW3 A5 102, 103	–
7.5	*10*	**ATV 71HU75M3**	VW3 A4 509	VW3 A4 555	VW3 A4 404	VW3 A5 102, 103	–
11	*15*	**ATV 71HD11M3X**	VW3 A4 510	VW3 A4 555	VW3 A4 405	VW3 A5 103	–
15	*20*	**ATV 71HD15M3X**	VW3 A4 510	VW3 A4 556	VW3 A4 405	VW3 A5 103	–
18.5	*25*	**ATV 71HD18M3X**	VW3 A4 511	VW3 A4 557	VW3 A4 406	VW3 A5 103	–
22	*30*	**ATV 71HD22M3X**	VW3 A4 511	VW3 A4 557	VW3 A4 406	VW3 A5 103	–
30	*40*	**ATV 71HD30M3X**	VW3 A4 512	VW3 A4 557	VW3 A4 408	VW3 A5 104	VW3 A9 612
37	*50*	**ATV 71HD37M3X**	VW3 A4 512	VW3 A4 557	VW3 A4 408	VW3 A5 104	VW3 A9 612
45	*60*	**ATV 71HD45M3X**	VW3 A4 512	VW3 A4 557	VW3 A4 408	VW3 A5 104	VW3 A9 612
55	*75*	**ATV 71HD55M3X**	–	VW3 A4 562	VW3 A4 410	VW3 A5 105	VW3 A9 612
75	*100*	**ATV 71HD75M3X**	–	VW3 A4 563	VW3 A4 410	VW3 A5 105	VW3 A9 612
Pages		22	155	160	168	172	173

(1) The options available for ATV 71H●●●M3 and H●●●M3X drives are also valid, at the same rating, for ATV 71H●●●M3383 and ATV 71H●●●M3X383 drives.

Sinus filter	Braking resistor	Hoist resistor	Flush-mounting kit (in a dust and damp proof enclosure)	UL Type 1 conformity kit (outside enclosure)	IP 21 or IP 31 conformity kit (outside enclosure)	Control card fan kit	DNV kit
VW3 A5 201	VW3 A7 701	VW3 A7 801	VW3 A9 501	VW3 A9 201	VW3 A9 101	–	–
VW3 A5 201	VW3 A7 702	VW3 A7 802	VW3 A9 501	VW3 A9 201	VW3 A9 101	–	–
VW3 A5 202	VW3 A7 702	VW3 A7 803	VW3 A9 502	VW3 A9 202	VW3 A9 102	–	–
VW3 A5 202	VW3 A7 703	VW3 A7 803	VW3 A9 502	VW3 A9 202	VW3 A9 102	–	–
VW3 A5 203	VW3 A7 703	VW3 A7 803	VW3 A9 502	VW3 A9 202	VW3 A9 102	–	–
VW3 A5 203	VW3 A7 704	VW3 A7 804	VW3 A9 503	VW3 A9 203	VW3 A9 103	–	–
VW3 A5 203	VW3 A7 704	VW3 A7 804	VW3 A9 504	VW3 A9 204	VW3 A9 104	–	–
VW3 A5 201	VW3 A7 701	VW3 A7 801	VW3 A9 501	VW3 A9 201	VW3 A9 101	–	VW3 A9 621
VW3 A5 201	VW3 A7 701	VW3 A7 801	VW3 A9 501	VW3 A9 201	VW3 A9 101	–	VW3 A9 621
VW3 A5 201	VW3 A7 702	VW3 A7 802	VW3 A9 501	VW3 A9 201	VW3 A9 101	–	VW3 A9 621
VW3 A5 202	VW3 A7 702	VW3 A7 803	VW3 A9 502	VW3 A9 202	VW3 A9 102	–	VW3 A9 622
VW3 A5 202	VW3 A7 703	VW3 A7 803	VW3 A9 502	VW3 A9 202	VW3 A9 102	–	VW3 A9 622
VW3 A5 203	VW3 A7 703	VW3 A7 803	VW3 A9 502	VW3 A9 202	VW3 A9 102	–	VW3 A9 622
VW3 A5 203	VW3 A7 704	VW3 A7 804	VW3 A9 503	VW3 A9 203	VW3 A9 103	–	VW3 A9 623
VW3 A5 203	VW3 A7 704	VW3 A7 804	VW3 A9 504	VW3 A9 204	VW3 A9 104	–	VW3 A9 624
VW3 A5 204	VW3 A7 705	VW3 A7 805	VW3 A9 505	VW3 A9 205	VW3 A9 105	–	VW3 A9 625
VW3 A5 204	VW3 A7 706	VW3 A7 805	VW3 A9 505	VW3 A9 205	VW3 A9 105	–	VW3 A9 625
VW3 A5 205	VW3 A7 707	VW3 A7 806	VW3 A9 506	VW3 A9 206	VW3 A9 106	VW3 A9 404	VW3 A9 626
VW3 A5 205	VW3 A7 707	VW3 A7 807	VW3 A9 506	VW3 A9 206	VW3 A9 106	VW3 A9 404	VW3 A9 626
VW3 A5 206	VW3 A7 708	VW3 A7 807	VW3 A9 508	VW3 A9 217	VW3 A9 117	VW3 A9 406	VW3 A9 628
VW3 A5 206	VW3 A7 709	VW3 A7 808	VW3 A9 508	VW3 A9 217	VW3 A9 117	VW3 A9 406	VW3 A9 628
VW3 A5 206	VW3 A7 709	VW3 A7 808	VW3 A9 508	VW3 A9 217	VW3 A9 117	VW3 A9 406	VW3 A9 628
VW3 A5 208	VW3 A7 713	VW3 A7 809	VW3 A9 510	VW3 A9 209	VW3 A9 109	–	VW3 A9 629 *(1)*
VW3 A5 208	VW3 A7 714	VW3 A7 810	VW3 A9 511	VW3 A9 210	VW3 A9 110	–	VW3 A9 631 *(1)*
175	137	139	30	32	33	27	28

(1) For the DNV VW3 A9 629 and 631 kits, it is necessary to order a variable speed drive without DC choke, by adding D at the end of the reference.
Example : ATV 71HD55M3X becomes ATV 71HD55M3XD, see page 22.

Table showing possible combinations of ATV 71H●●●N4 drive options

Motor kW	Motor HP	Drive	Options: DC choke	Line choke	Passive filter (1)	Additional EMC input filter	IP 30 EMC filter kit	Motor choke	IP 20 motor choke kit
Three-phase supply voltage: 380…480 V 50/60 Hz									
0.75	*1*	**ATV 71H075N4**	VW3 A4 501	VW3 A4 551	VW3 A4 6●1	VW3 A4 401	–	VW3 A5 101, 102, 103	–
1.5	*2*	**ATV 71HU15N4**	VW3 A4 502	VW3 A4 551	VW3 A4 6●1	VW3 A4 401	–	VW3 A5 101, 102, 103	–
2.2	*3*	**ATV 71HU22N4**	VW3 A4 503	VW3 A4 552	VW3 A4 6●1	VW3 A4 401	–	VW3 A5 101, 102, 103	–
3	–	**ATV 71HU30N4**	VW3 A4 503	VW3 A4 552	VW3 A4 6●1	VW3 A4 402	–	VW3 A5 101, 102, 103	–
4	*5*	**ATV 71HU40N4**	VW3 A4 504	VW3 A4 552	VW3 A4 6●2	VW3 A4 402	–	VW3 A5 101, 102, 103	–
5.5	*7.5*	**ATV 71HU55N4**	VW3 A4 505	VW3 A4 553	VW3 A4 6●2	VW3 A4 403	–	VW3 A5 102, 103, 104	VW3 A9 612
7.5	*10*	**ATV 71HU75N4**	VW3 A4 506	VW3 A4 553	VW3 A4 6●3	VW3 A4 403	–	VW3 A5 102, 103, 104	VW3 A9 612
11	*15*	**ATV 71HD11N4**	VW3 A4 507	VW3 A4 554	VW3 A4 6●3	VW3 A4 404	–	VW3 A5 102, 103, 104	VW3 A9 612
15	*20*	**ATV 71HD15N4**	VW3 A4 508	VW3 A4 554	VW3 A4 6●4	VW3 A4 405	–	VW3 A5 102, 103, 104	VW3 A9 612
18.5	*25*	**ATV 71HD18N4**	VW3 A4 508	VW3 A4 555	VW3 A4 6●5	VW3 A4 405	–	VW3 A5 102, 103, 104	VW3 A9 612
22	*30*	**ATV 71HD22N4**	VW3 A4 510	VW3 A4 555	VW3 A4 6●6	VW3 A4 406	–	VW3 A5 103, 104	VW3 A9 612
30	*40*	**ATV 71HD30N4**	VW3 A4 510	VW3 A4 556	VW3 A4 6●7	VW3 A4 407	–	VW3 A5 103, 104	VW3 A9 612
37	*50*	**ATV 71HD37N4**	VW3 A4 510	VW3 A4 556	VW3 A4 6●7	VW3 A4 407	–	VW3 A5 103, 104	VW3 A9 612
45	*60*	**ATV 71HD45N4**	VW3 A4 511	VW3 A4 556	VW3 A4 6●8	VW3 A4 408	–	VW3 A5 104	VW3 A9 612
55	*75*	**ATV 71HD55N4**	VW3 A4 511	VW3 A4 556	VW3 A4 6●8	VW3 A4 408	–	VW3 A5 104	VW3 A9 612
75	*100*	**ATV 71HD75N4**	VW3 A4 511	VW3 A4 558	VW3 A4 6●9	VW3 A4 408	–	VW3 A5 104	VW3 A9 612
90	*125*	**ATV 71HD90N4**	–	VW3 A4 558	VW3 A4 6●9	VW3 A4 410	VW3 A9 601	VW3 A5 104	VW3 A9 612
110	*150*	**ATV 71HC11N4**	–	VW3 A4 559	VW3 A4 6●0	VW3 A4 410	VW3 A9 601	VW3 A5 105	VW3 A9 612
132	*200*	**ATV 71HC13N4**	–	VW3 A4 560	VW3 A4 6●1	VW3 A4 410	VW3 A9 601	VW3 A5 105	VW3 A9 612
160	*250*	**ATV 71HC16N4**	–	VW3 A4 561	VW3 A4 6●2	VW3 A4 411	VW3 A9 601	VW3 A5 106	VW3 A9 613
200	*300*	**ATV 71HC20N4**	–	VW3 A4 569	VW3 A4 6●3	VW3 A4 411	VW3 A9 601	VW3 A5 106	VW3 A9 613
220	*350*	**ATV 71HC25N4**	–	VW3 A4 562	VW3 A4 6●3	VW3 A4 411	VW3 A9 601	VW3 A5 106	VW3 A9 613
250	*400*	**ATV 71HC25N4**	–	VW3 A4 564	VW3 A4 6●1	VW3 A4 411	VW3 A9 601	VW3 A5 107	VW3 A9 613
280	*450*	**ATV 71HC28N4**	–	VW3 A4 564	VW3 A4 6●2	VW3 A4 411	VW3 A9 601	VW3 A5 107	VW3 A9 613
315	*500*	**ATV 71HC31N4**	–	VW3 A4 565	VW3 A4 6●2	VW3 A4 412	VW3 A9 602	VW3 A5 107	VW3 A9 613
355	–	**ATV 71HC40N4**	–	VW3 A4 569	VW3 A4 6●2	VW3 A4 412	VW3 A9 602	VW3 A5 107	VW3 A9 613
400	*600*	**ATV 71HC40N4**	–	VW3 A4 569	VW3 A4 6●9	VW3 A4 412	VW3 A9 602	VW3 A5 108	VW3 A9 613
500	*700*	**ATV 71HC50N4**	–	VW3 A4 564	VW3 A4 6●2	VW3 A4 413	VW3 A9 602	VW3 A5 108	VW3 A9 613
Pages		23	155	160	162	168	169	172	173

(1) There are passive filters for a 460 V ∿ supply, see pages 164 and 165.

Sinus filter	Resistance braking unit	Braking resistor	Hoist resistor	Flush-mounting kit (in a dust and damp proof enclosure)	UL Type 1 conformity kit (outside enclosure)	IP 21 or IP 31 conformity kit (outside enclosure)	Control card fan kit	DNV kit *(1)*
–	–	VW3 A7 701	VW3 A7 801	VW3 A9 501	VW3 A9 201	VW3 A9 101	–	VW3 A9 621
VW3 A5 201	–	VW3 A7 701	VW3 A7 801	VW3 A9 501	VW3 A9 201	VW3 A9 101	–	VW3 A9 621
VW3 A5 201	–	VW3 A7 701	VW3 A7 801	VW3 A9 501	VW3 A9 201	VW3 A9 101	–	VW3 A9 621
VW3 A5 201	–	VW3 A7 701	VW3 A7 802	VW3 A9 502	VW3 A9 202	VW3 A9 102	–	VW3 A9 622
VW3 A5 201	–	VW3 A7 701	VW3 A7 802	VW3 A9 502	VW3 A9 202	VW3 A9 102	–	VW3 A9 622
VW3 A5 202	–	VW3 A7 702	VW3 A7 802	VW3 A9 503	VW3 A9 203	VW3 A9 103	–	VW3 A9 623
VW3 A5 203	–	VW3 A7 702	VW3 A7 803	VW3 A9 503	VW3 A9 203	VW3 A9 103	–	VW3 A9 623
VW3 A5 203	–	VW3 A7 703	VW3 A7 803	VW3 A9 504	VW3 A9 204	VW3 A9 104	–	VW3 A9 624
VW3 A5 203	–	VW3 A7 703	VW3 A7 804	VW3 A9 505	VW3 A9 205	VW3 A9 105	–	VW3 A9 625
VW3 A5 204	–	VW3 A7 704	VW3 A7 804	VW3 A9 505	VW3 A9 205	VW3 A9 105	–	VW3 A9 625
VW3 A5 204	–	VW3 A7 704	VW3 A7 804	VW3 A9 506	VW3 A9 206	VW3 A9 106	VW3 A9 404	VW3 A9 626
VW3 A5 204	–	VW3 A7 704	VW3 A7 804	VW3 A9 507	VW3 A9 207	VW3 A9 107	VW3 A9 405	VW3 A9 627
VW3 A5 205	–	VW3 A7 705	VW3 A7 805	VW3 A9 507	VW3 A9 207	VW3 A9 107	VW3 A9 405	VW3 A9 627
VW3 A5 205	–	VW3 A7 707	VW3 A7 805	VW3 A9 509	VW3 A9 208	VW3 A9 108	VW3 A9 407	VW3 A9 628
VW3 A5 206	–	VW3 A7 707	VW3 A7 805	VW3 A9 509	VW3 A9 208	VW3 A9 108	VW3 A9 407	VW3 A9 628
VW3 A5 206	–	VW3 A7 707	VW3 A7 806	VW3 A9 509	VW3 A9 208	VW3 A9 108	VW3 A9 407	VW3 A9 628
VW3 A5 207	–	VW3 A7 710	VW3 A7 811	VW3 A9 510	VW3 A9 209	VW3 A9 109	–	VW3 A9 629
VW3 A5 207	–	VW3 A7 711	VW3 A7 812	VW3 A9 511	VW3 A9 210	VW3 A9 110	–	VW3 A9 631
VW3 A5 208	–	VW3 A7 711	VW3 A7 812	VW3 A9 512	VW3 A9 211	VW3 A9 111	–	VW3 A9 633
VW3 A5 208	–	VW3 A7 712	VW3 A7 813	VW3 A9 513	VW3 A9 212	VW3 A9 112	–	VW3 A9 635
VW3 A5 209	VW3 A7 101	VW3 A7 715	VW3 A7 814	VW3 A9 514, 515	VW3 A9 213, 214	VW3 A9 113, 114	–	VW3 A9 637
VW3 A5 209	VW3 A7 101	VW3 A7 716	VW3 A7 815	VW3 A9 514, 515	VW3 A9 213, 214	VW3 A9 113, 114	–	VW3 A9 638
VW3 A5 210	VW3 A7 101	VW3 A7 716	VW3 A7 815	VW3 A9 514, 515	VW3 A9 213, 214	VW3 A9 113, 114	–	VW3 A9 638
VW3 A5 210	VW3 A7 101	VW3 A7 716	VW3 A7 815	VW3 A9 514, 515	VW3 A9 213, 214	VW3 A9 113, 114	–	VW3 A9 638
VW3 A5 210	VW3 A7 102	VW3 A7 717	VW3 A7 816	–	–	VW3 A9 115	–	VW3 A9 639
VW3 A5 210	VW3 A7 102	VW3 A7 717	VW3 A7 816	–	–	VW3 A9 115	–	VW3 A9 640
VW3 A5 211	VW3 A7 102	VW3 A7 717	VW3 A7 816	–	–	VW3 A9 115	–	VW3 A9 640
VW3 A5 211	VW3 A7 102	VW3 A7 718	VW3 A7 817	–	–	VW3 A9 116	–	VW3 A9 641
175	135	137	139	30	32	33	27	28

(1) For the DNV VW3 A9 629…641 kits, it is necessary to order a variable speed drive without DC choke, by adding D at the end of the reference.
Example : ATV 71HD90N4 becomes ATV 71HD90N4D, see page 23.

Table showing possible combinations of ATV 71W●●●N4 drive options

Motor		Drive	Options			
kW	HP		DC choke	Line choke	Passive filter (1)	Additional EMC filter
Three-phase supply voltage: 380…480 V 50/60 Hz						
0.75	1	**ATV 71W075N4**	VW3 A4 501	VW3 A4 551	VW3 A4 6●1	VW3 A4 401
1.5	2	**ATV 71WU15N4**	VW3 A4 502	VW3 A4 551	VW3 A4 6●1	VW3 A4 401
2.2	3	**ATV 71WU22N4**	VW3 A4 503	VW3 A4 552	VW3 A4 6●1	VW3 A4 401
3	–	**ATV 71WU30N4**	VW3 A4 503	VW3 A4 552	VW3 A4 6●1	VW3 A4 402
4	5	**ATV 71WU40N4**	VW3 A4 504	VW3 A4 552	VW3 A4 6●2	VW3 A4 402
5.5	7.5	**ATV 71WU55N4**	VW3 A4 505	VW3 A4 553	VW3 A4 6●2	VW3 A4 403
7.5	10	**ATV 71WU75N4**	VW3 A4 506	VW3 A4 553	VW3 A4 6●3	VW3 A4 403
11	15	**ATV 71WD11N4**	VW3 A4 507	VW3 A4 554	VW3 A4 6●3	VW3 A4 404
15	20	**ATV 71WD15N4**	VW3 A4 508	VW3 A4 554	VW3 A4 6●4	VW3 A4 405
18.5	25	**ATV 71WD18N4**	VW3 A4 508	VW3 A4 555	VW3 A4 6●5	VW3 A4 405
22	30	**ATV 71WD22N4**	VW3 A4 510	VW3 A4 555	VW3 A4 6●6	VW3 A4 406
30	40	**ATV 71WD30N4**	VW3 A4 510	VW3 A4 556	VW3 A4 6●7	VW3 A4 407
37	50	**ATV 71WD37N4**	VW3 A4 510	VW3 A4 556	VW3 A4 6●7	VW3 A4 407
45	60	**ATV 71WD45N4**	VW3 A4 511	VW3 A4 556	VW3 A4 6●8	VW3 A4 408
55	75	**ATV 71WD55N4**	VW3 A4 511	VW3 A4 556	VW3 A4 6●8	VW3 A4 408
75	100	**ATV 71WD75N4**	VW3 A4 511	VW3 A4 558	VW3 A4 6●9	VW3 A4 408
Pages		24	155	160	162	168

(1) There are passive filters for a 460 V ∿ supply, see pages 164 and 165.

Motor choke	IP 20 motor choke kit	Sinus filter	Braking resistor	Hoist resistor	Ready-assembled IP 54 base plate
VW3 A5 101, 102, 103	–	–	VW3 A7 701	VW3 A7 801	VW3 A9 901
VW3 A5 101, 102, 103	–	VW3 A5 201	VW3 A7 701	VW3 A7 801	VW3 A9 901
VW3 A5 101, 102, 103	–	VW3 A5 201	VW3 A7 701	VW3 A7 801	VW3 A9 901
VW3 A5 101, 102, 103	–	VW3 A5 201	VW3 A7 701	VW3 A7 802	VW3 A9 901
VW3 A5 101, 102, 103	–	VW3 A5 201	VW3 A7 701	VW3 A7 802	VW3 A9 901
VW3 A5 102, 103, 104	VW3 A9 612	VW3 A5 202	VW3 A7 702	VW3 A7 802	VW3 A9 902
VW3 A5 102, 103, 104	VW3 A9 612	VW3 A5 203	VW3 A7 702	VW3 A7 803	VW3 A9 902
VW3 A5 102, 103, 104	VW3 A9 612	VW3 A5 203	VW3 A7 703	VW3 A7 803	VW3 A9 903
VW3 A5 102, 103, 104	VW3 A9 612	VW3 A5 203	VW3 A7 703	VW3 A7 804	VW3 A9 904
VW3 A5 102, 103, 104	VW3 A9 612	VW3 A5 204	VW3 A7 704	VW3 A7 804	VW3 A9 904
VW3 A5 103, 104	VW3 A9 612	VW3 A5 204	VW3 A7 704	VW3 A7 804	VW3 A9 905
VW3 A5 103, 104	VW3 A9 612	VW3 A5 204	VW3 A7 704	VW3 A7 804	VW3 A9 906
VW3 A5 103, 104	VW3 A9 612	VW3 A5 205	VW3 A7 705	VW3 A7 805	VW3 A9 906
VW3 A5 104	VW3 A9 612	VW3 A5 205	VW3 A7 707	VW3 A7 805	VW3 A9 907
VW3 A5 104	VW3 A9 612	VW3 A5 206	VW3 A7 707	VW3 A7 805	VW3 A9 907
VW3 A5 104	VW3 A9 612	VW3 A5 206	VW3 A7 707	VW3 A7 806	VW3 A9 907
172	173	175	137	139	26

Table showing possible combinations of ATV 71P●●●N4Z drive options

Motor		Drive	Options					
kW	*HP*		DC choke	Line choke	Passive filter *(1)*	Additional EMC filter	Motor choke	IP 20 motor choke kit
Three-phase supply voltage: 380…480 V 50/60 Hz								
0.75	*1*	**ATV 71P075N4Z**	VW3 A4 501	VW3 A4 551	VW3 A4 6●1	VW3 A4 401	VW3 A5 101	–
1.5	*2*	**ATV 71PU15N4Z**	VW3 A4 502	VW3 A4 551	VW3 A4 6●1	VW3 A4 401	VW3 A5 101, 102, 103	–
2.2	*3*	**ATV 71PU22N4Z**	VW3 A4 503	VW3 A4 552	VW3 A4 6●1	VW3 A4 401	VW3 A5 101, 102, 103	–
3	–	**ATV 71PU30N4Z**	VW3 A4 503	VW3 A4 552	VW3 A4 6●1	VW3 A4 402	VW3 A5 101, 102, 103	–
4	*5*	**ATV 71PU40N4Z**	VW3 A4 504	VW3 A4 552	VW3 A4 6●2	VW3 A4 402	VW3 A5 101, 102, 103	–
5.5	*7.5*	**ATV 71PU55N4Z**	VW3 A4 505	VW3 A4 553	VW3 A4 6●2	VW3 A4 403	VW3 A5 102, 103, 104	VW3 A9 612
7.5	*10*	**ATV 71PU75N4Z**	VW3 A4 506	VW3 A4 553	VW3 A4 6●3	VW3 A4 403	VW3 A5 102, 103, 104	VW3 A9 612
11	*15*	**ATV 71PD11N4Z**	VW3 A4 507	VW3 A4 554	VW3 A4 6●3	VW3 A4 404	VW3 A5 102, 103, 104	VW3 A9 612
Pages		24	155	160	162	168	172	173

(1) There are passive filters for a 460 V ∿ supply, see pages 164 and 165.

Sinus filter	Braking resistor	Hoist resistor	Kit for mounting in a dust and damp proof enclosure	Fan	UL Type 1 conformity kit (outside enclosure)	IP 21 or IP 31 conformity kit (outside enclosure)
VW3 A5 201	VW3 A7 701	VW3 A7 801	VW3 A9 801	VZ3 V1 203	VW3 A9 201	VW3 A9 101
VW3 A5 201	VW3 A7 701	VW3 A7 801	VW3 A9 801	VZ3 V1 203	VW3 A9 201	VW3 A9 101
VW3 A5 201	VW3 A7 701	VW3 A7 801	VW3 A9 801	VZ3 V1 203	VW3 A9 201	VW3 A9 101
VW3 A5 201	VW3 A7 701	VW3 A7 802	VW3 A9 802	VZ3 V1 209	VW3 A9 202	VW3 A9 102
VW3 A5 201	VW3 A7 701	VW3 A7 802	VW3 A9 802	VZ3 V1 209	VW3 A9 202	VW3 A9 102
VW3 A5 202	VW3 A7 702	VW3 A7 802	VW3 A9 803	VZ3 V1 204	VW3 A9 203	VW3 A9 103
VW3 A5 203	VW3 A7 702	VW3 A7 803	VW3 A9 803	VZ3 V1 204	VW3 A9 203	VW3 A9 103
VW3 A5 203	VW3 A7 703	VW3 A7 803	–	VZ3 V1 210	VW3 A9 204	VW3 A9 104
175	137	139	31	31	32	33

Table showing possible combinations of ATV 71H●●●Y drive options

Motor			Drive	Options					
				Line choke	Motor choke	IP 20 motor choke kit	Resistance braking unit	Braking resistor	Hoist resistor
500 V	*575 V*	690 V							
kW	*HP*	kW							
Three-phase supply voltage: 500…690 V 50/60 Hz									
1.5	*2*	2.2	**ATV 71HU22Y**	VW3 A4 551	VW3 A5 101, 102, 103	–	–	VW3 A7 701	VW3 A7 801
2.2	*3*	3	**ATV 71HU30Y**	VW3 A4 551	VW3 A5 101, 102, 103	–	–	VW3 A7 701	VW3 A7 802
3	–	4	**ATV 71HU40Y**	VW3 A4 551	VW3 A5 101, 102, 103	–	–	VW3 A7 701	VW3 A7 802
4	*5*	5.5	**ATV 71HU55Y**	VW3 A4 552	VW3 A5 101, 102, 103	–	–	VW3 A7 701	VW3 A7 802
5.5	*7.5*	7.5	**ATV 71HU75Y**	VW3 A4 552	VW3 A5 101, 102, 103	–	–	VW3 A7 702	VW3 A7 803
7.5	*10*	11	**ATV 71HD11Y**	VW3 A4 553	VW3 A5 102, 103, 104	VW3 A9 612	–	VW3 A7 702	VW3 A7 803
11	*15*	15	**ATV 71HD15Y**	VW3 A4 553	VW3 A5 102, 103, 104	VW3 A9 612	–	VW3 A7 703	VW3 A7 804
15	*20*	18.5	**ATV 71HD18Y**	VW3 A4 554	VW3 A5 102, 103, 104	VW3 A9 612	–	VW3 A7 703	VW3 A7 804
18.5	*25*	22	**ATV 71HD22Y**	VW3 A4 554	VW3 A5 102, 103, 104	VW3 A9 612	–	VW3 A7 704	VW3 A7 804
22	*30*	30	**ATV 71HD30Y**	VW3 A4 555	VW3 A5 102, 103, 104	VW3 A9 612	–	VW3 A7 704	VW3 A7 804
30	*40*	37	**ATV 71HD37Y**	VW3 A4 555	VW3 A5 103, 104	VW3 A9 612	–	VW3 A7 704	VW3 A7 805
37	*50*	45	**ATV 71HD45Y**	VW3 A4 555	VW3 A5 103, 104	VW3 A9 612	–	VW3 A7 705	VW3 A7 805
45	*60*	55	**ATV 71HD55Y**	VW3 A4 556	VW3 A5 103, 104	VW3 A9 612	–	VW3 A7 705	VW3 A7 805
55	*75*	75	**ATV 71HD75Y**	VW3 A4 556	VW3 A5 104	VW3 A9 612	–	VW3 A7 707	VW3 A7 818
75	*100*	90	**ATV 71HD90Y**	VW3 A4 556	VW3 A5 104	VW3 A9 612	–	VW3 A7 707	VW3 A7 818
90	*125*	110	**ATV 71HC11Y**	VW3 A4 570	VW3 A5 104	VW3 A9 612	–	–	VW3 A7 806
110	*150*	132	**ATV 71HC13Y**	VW3 A4 571	VW3 A5 104	VW3 A9 612	–	–	VW3 A7 805
132	–	160	**ATV 71HC16Y**	VW3 A4 571	VW3 A5 105	VW3 A9 612	–	–	VW3 A7 805
160	*200*	200	**ATV 71HC20Y**	VW3 A4 560	VW3 A5 105	VW3 A9 612	VW3 A7 103	–	VW3 A7 806
200	*250*	250	**ATV 71HC25Y**	VW3 A4 572	VW3 A5 106	VW3 A9 613	VW3 A7 103	–	VW3 A7 716
250	*350*	315	**ATV 71HC31Y**	VW3 A4 572	VW3 A5 106	VW3 A9 613	VW3 A7 103	–	VW3 A7 814
315	*450*	400	**ATV 71HC40Y**	VW3 A4 568	VW3 A5 107	VW3 A9 613	VW3 A7 104	–	VW3 A7 717
400	*550*	500	**ATV 71HC50Y**	VW3 A4 572	VW3 A5 107	VW3 A9 613	VW3 A7 104	–	VW3 A7 718
500	*700*	630	**ATV 71HC63Y**	VW3 A4 572	VW3 A5 108	VW3 A9 613	VW3 A7 104	–	VW3 A7 816
Pages			25	160	173	173	135	137	139

Flushing-mounting kit (in a dust and damp proof enclosure)	UL Type 1 conformity kit (outside enclosure)	IP 21 or IP 31 conformity kit (outside enclosure)	Control card fan kit	DNV kit
VW3 A9 506	VW3 A9 206	VW3 A9 106	VW3 A9 404	VW3 A9 642
VW3 A9 506	VW3 A9 206	VW3 A9 106	VW3 A9 404	VW3 A9 642
VW3 A9 506	VW3 A9 206	VW3 A9 106	VW3 A9 404	VW3 A9 642
VW3 A9 506	VW3 A9 206	VW3 A9 106	VW3 A9 404	VW3 A9 642
VW3 A9 506	VW3 A9 206	VW3 A9 106	VW3 A9 404	VW3 A9 642
VW3 A9 506	VW3 A9 206	VW3 A9 106	VW3 A9 404	VW3 A9 642
VW3 A9 506	VW3 A9 206	VW3 A9 106	VW3 A9 404	VW3 A9 642
VW3 A9 506	VW3 A9 206	VW3 A9 106	VW3 A9 404	VW3 A9 642
VW3 A9 506	VW3 A9 206	VW3 A9 106	VW3 A9 404	VW3 A9 642
VW3 A9 506	VW3 A9 206	VW3 A9 106	VW3 A9 404	VW3 A9 642
VW3 A9 509	VW3 A9 208	VW3 A9 108	VW3 A9 407	VW3 A9 643
VW3 A9 509	VW3 A9 208	VW3 A9 108	VW3 A9 407	VW3 A9 643
VW3 A9 509	VW3 A9 208	VW3 A9 108	VW3 A9 407	VW3 A9 643
VW3 A9 509	VW3 A9 208	VW3 A9 108	VW3 A9 407	VW3 A9 643
VW3 A9 509	VW3 A9 208	VW3 A9 108	VW3 A9 407	VW3 A9 643
VW3 A9 512	VW3 A9 211	VW3 A9 111	–	VW3 A9 644
VW3 A9 512	VW3 A9 211	VW3 A9 111	–	VW3 A9 645
VW3 A9 512	VW3 A9 211	VW3 A9 111	–	VW3 A9 645
VW3 A9 514, 515	VW3 A9 213, 214	VW3 A9 113, 114	–	VW3 A9 646
VW3 A9 514, 515	VW3 A9 213, 214	VW3 A9 113, 114	–	VW3 A9 647
VW3 A9 514, 515	VW3 A9 213, 214	VW3 A9 113, 114	–	VW3 A9 647
–	–	VW3 A9 116	–	VW3 A9 648
–	–	VW3 A9 116	–	VW3 A9 649
–	–	VW3 A9 116	–	VW3 A9 649
30	32	33	27	28

List of options common to Altivar 71 drives

Description	Reference	Page
Logic input adapter		
115 V ∿ logic input adapter	VW3 A3 101	26
HMI terminal		
Remote graphic display terminal	VW3 A1 101	108
Encoder interface cards		
With RS 422 compatible differential outputs	VW3 A3 401, 402	113
With open collector outputs	VW3 A3 403, 404	113
With push-pull outputs	VW3 A3 405…407	113
I/O extension cards *(1)*		
Logic	VW3 A3 201	115
Extended	VW3 A3 202	115
Programmable card *(1)*		
"Controller Inside" programmable card	VW3 A3 501	123
PowerSuite software workshop		
PowerSuite software workshop for PC	VW3 A8 104, 105	304

List of options specific to Altivar 71H●●●M3383, M3X383 and N4383 drives

Description	Reference	Page
Encoder interface cards		
Resolver	VW3 A3 408	113
Universal with SinCos, SinCos Hiperface®, EnDat® or SSI output	VW3 A3 409	113
With RS 422 compatible differential outputs with encoder emulation	VW3 A3 411	113

List of communication cards *(1)*

Description	Reference	Page
Modbus TCP	VW3 A3 310	126 and 310
EtherNet/IP	VW3 A3 316	127
Standard Fipio	VW3 A3 311	128 and 314
Substitution Fipio	VW3 A3 301	128 and 314
Modbus Plus	VW3 A3 302	128 and 322
DeviceNet	VW3 A3 309	129
InterBus	VW3 A3 304	129
CC-Link	VW3 A3 317	129
Modbus/Uni-Telway	VW3 A3 303	131, 317 and 325
PROFIBUS DP	VW3 A3 307	130

(1) For card compatibility table, see page opposite.

Card compatibility table *(1)*

Type of card	Logic I/O VW3 A3 201	Extended I/O VW3 A3 202	Programmable "Controller inside" VW3 A3 501	Communication VW3 A3 3●●
Logic I/O VW3 A3 201				
Extended I/O VW3 A3 202				
Programmable "Controller inside" VW3 A3 501				
Communication VW3 A3 3●●				

Possible to combine

Not possible to combine

(1) Maximum combination involving two types of card is 2.

Variable speed drives
Altivar 71
UL Type 1/IP 20 drives

ATV 71H●●●M3, ATV 71HD11M3X, HD15M3X, ATV 71H075N4...HD18N4

Without option card | **1 option card** *(1)* | **2 option cards** *(1)* | **Common front view**

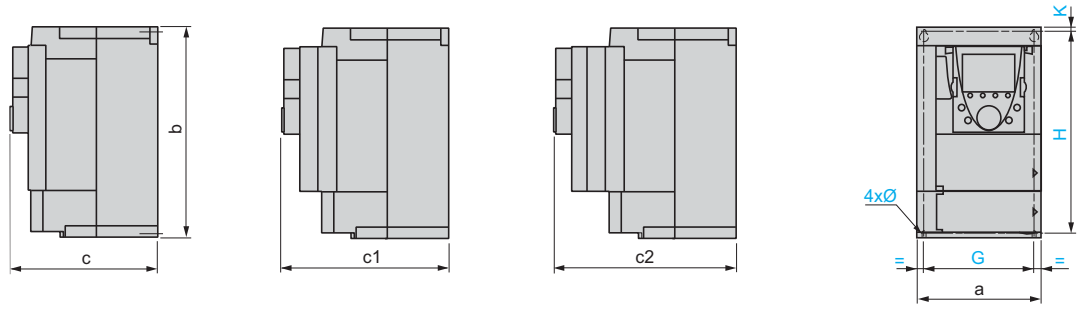

ATV 71H	a	b	c	c1	c2	G	H	K	Ø
037M3...U15M3, 075N4...U22N4	130	230	175	198	221	113.5	220	5	5
U22M3...U40M3, U30N4, U40N4	155	260	187	210	233	138	249	4	5
U55M3, U55N4, U75N4	175	295	187	210	233	158	283	6	5
U75M3, D11N4	210	295	213	236	259	190	283	6	6
D11M3X, D15M3X, D15N4, D18N4	230	400	213	236	259	210	386	8	6

ATV 71HD18M3X...45M3X, ATV 71HD22N4...HD37N4, ATV 71HU22Y…HD30Y

Without option card | **1 option card** *(1)* | **2 option cards** *(1)* | **Common front view**

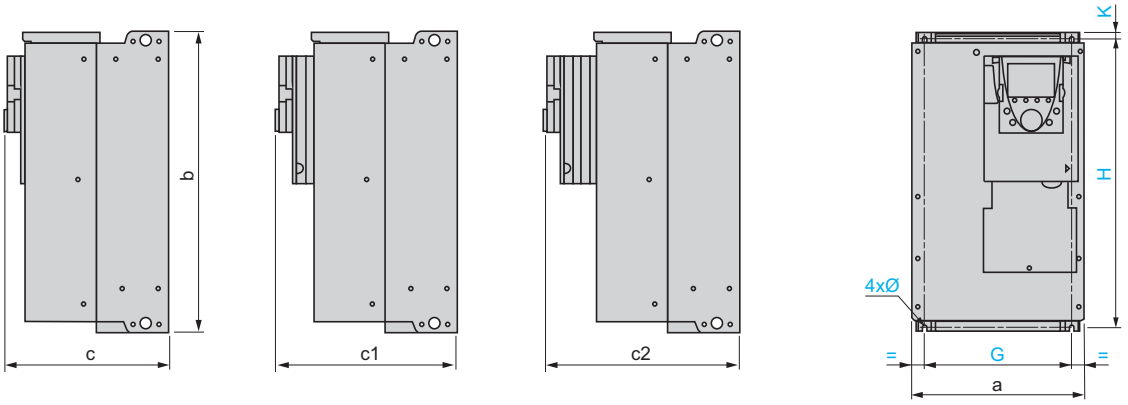

ATV 71H	a	b	c	c1	c2	G	H	K	Ø
D18M3X, D22M3X, D22N4, U22Y…D30Y	240	420	236	259	282	206	403	10	6
D30N4, D37N4	240	550	266	289	312	206	529	10	6
D30M3X...D45M3X	320	550	266	289	312	280	524	10	9

ATV 71HD45N4...HD75N4, ATV 71HD37Y…HD90Y

Without option card | **1 option card** *(1)* | **2 option cards** *(1)* | **Common front view**

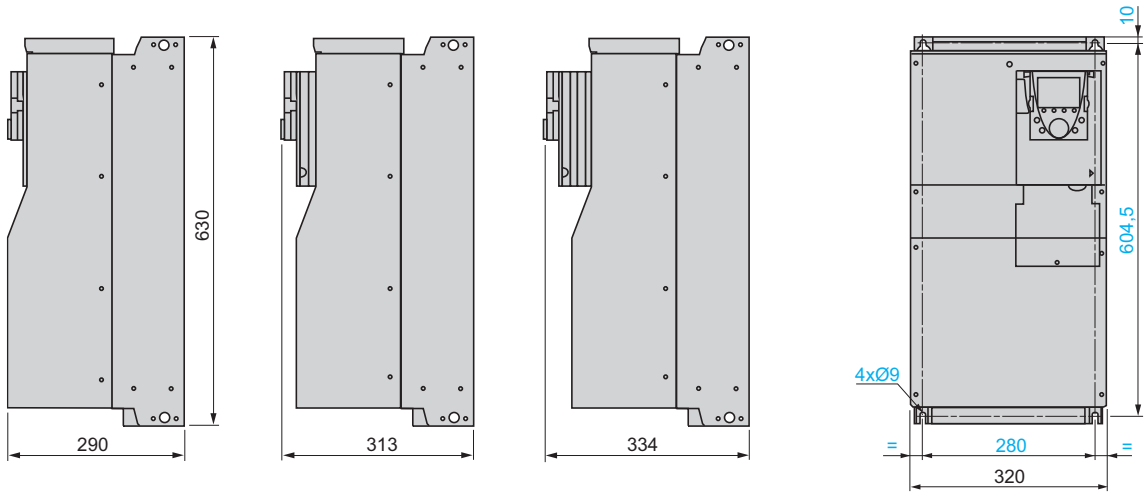

(1) Option cards: I/O extension cards, communication cards or "Controller Inside" programmable card.

Presentation: pages 4 to 9
Characteristics: pages 10 to 17
References: pages 22 to 25
Schemes: pages 218 to 241
Functions: pages 268 to 299

ATV 71HD55M3X, HD75M3X, ATV 71HD90N4...HC28N4, ATV 71HC11Y…HC31Y

With or without 1 option card *(1)*

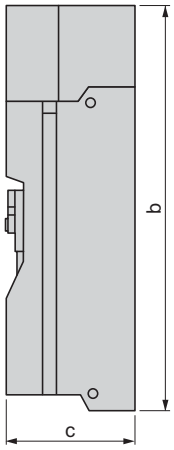

2 option cards *(1)*

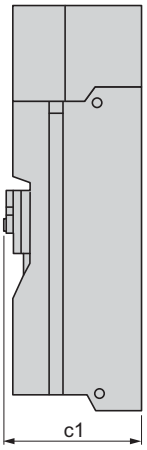

Common front view

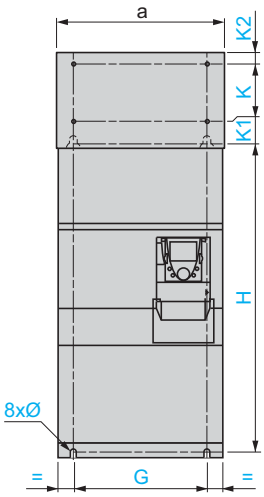

ATV 71HC20N4…HC28N4 with braking unit VW3 A7 101

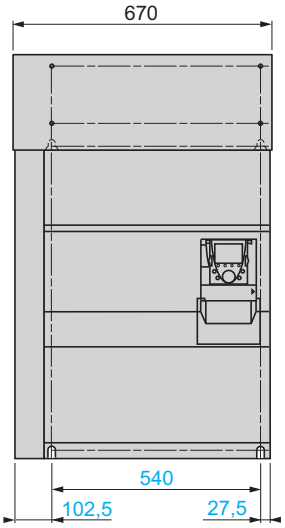

ATV 71H	a	b	c	c1	G	H	K	K1	K2	Ø
D55M3X, D90N4	320	920	377	392	250	650	150	75	30	11.5
D75M3X, C11N4	360	1022	377	392	298	758	150	75	30	11.5
C13N4, C11Y…C16Y	340	1190	377	392	285	920	150	75	30	11.5
C16N4	440	1190	377	392	350	920	150	75	30	11.5
C20N4…C28N4, C20Y…C31Y	595	1190	377	392	540	920	150	75	30	11.5

ATV 71HC31N4…HC50N4, ATV 71HC40Y…HC63Y

With or without 1 option card *(1)*

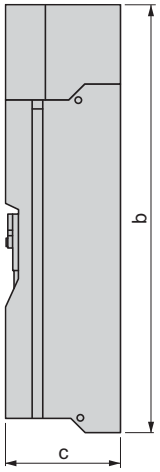

2 option cards *(1)*

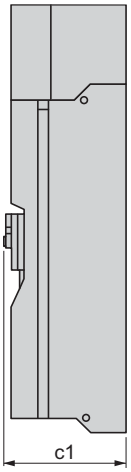

ATV 71HC31N4, HC40N4

Front view

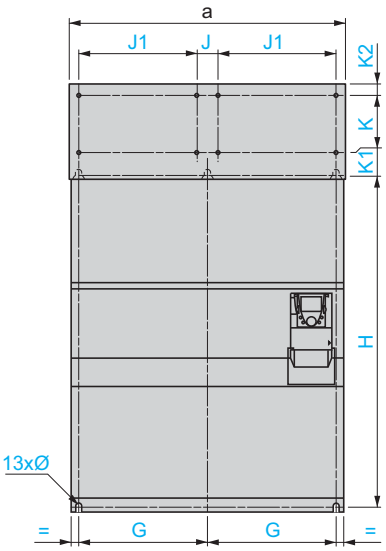

ATV 71HC50N4, HC40Y…HC63Y

Front view

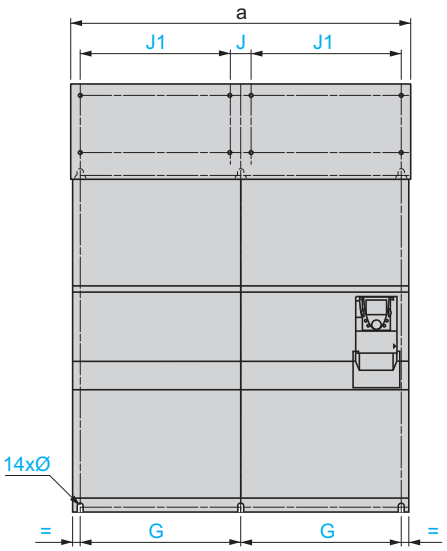

ATV 71H	a	b	c	c1	G	J	J1	H	K	K1	K2	Ø
C31N4, C40N4	890	1390	377	392	417.5	75	380	1120	150	75	30	11.5
C50N4, HC40Y…HC63Y	1120	1390	377	392	532.5	75	495	1120	150	75	30	11.5

(1) Option cards: I/O extension cards, communication cards or "Controller Inside" programmable card.

Variable speed drives without graphic display terminal
ATV 71H●●●M3Z, ATV 71HD11M3XZ, HD15M3XZ, ATV 71H075N4Z...HD18N4Z, ATV 71P●●●N4Z

Without option card *(1)* | **1 option card** *(1)* | **2 option cards** *(1)* | **Common front view**

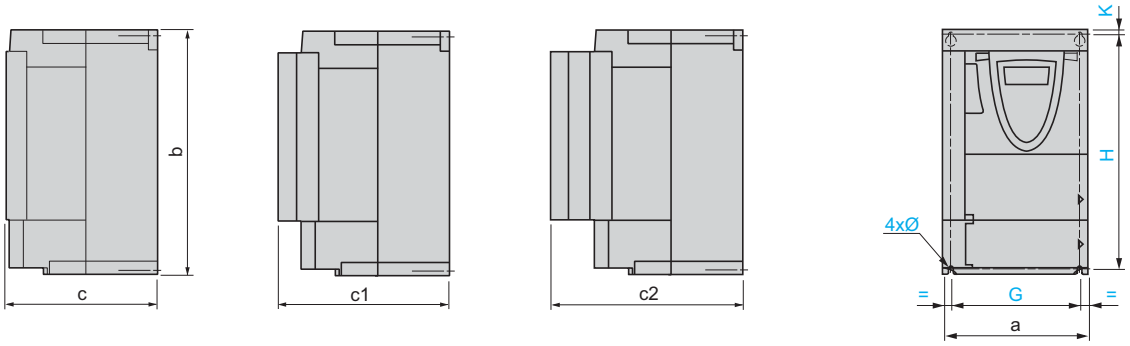

ATV 71	a	b	c	c1	c2	G	H	K	Ø
H037M3Z...HU15M3Z, H075N4Z...HU22N4Z P075N4Z, PU22N4Z	130	230	149	172	195	113.5	220	5	5
HU22M3Z...HU40M3Z, HU30N4Z, HU40N4Z PU30N4Z, PU40N4Z	155	260	161	184	207	138	249	4	5
HU55M3Z, HU55N4Z, HU75N4Z PU55N4Z, PU75N4Z	175	295	161	184	207	158	283	6	6
HU75M3Z, HD11N4Z, PD11N4Z	210	295	187	210	233	190	283	6	6
HD11M3XZ, HD15M3XZ HD15N4Z, HD18N4Z	230	400	187	210	233	210	386	8	6

Variable speed drives without graphic display terminal
ATV 71HD22N4Z...HD37N4Z

Without option card | **1 option card** *(1)* | **2 option cards** *(1)* | **Common front view**

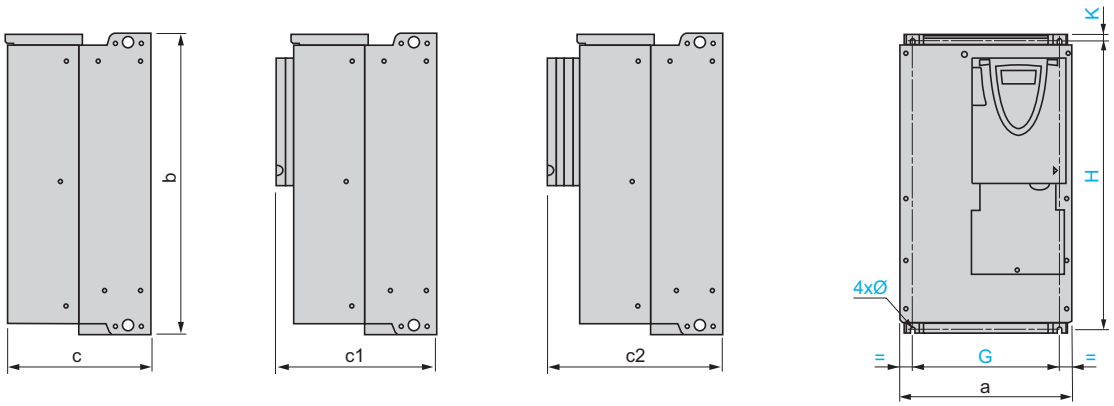

ATV 71H	a	b	c	c1	c2	G	H	K	Ø
D22N4Z	240	420	210	233	256	206	403	10	6
D30N4Z, D37N4Z	240	550	230	253	276	206	531.5	10	6

(1) Option cards: I/O extension cards, communication cards or "Controller Inside" programmable card.

Variable speed drives without graphic display terminal
ATV 71HD45N4Z...HD75N4Z

With or without 1 option card *(1)*	2 option cards *(1)*	Common front view

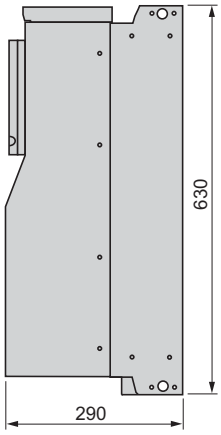

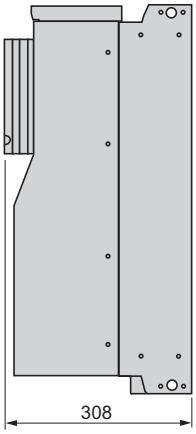

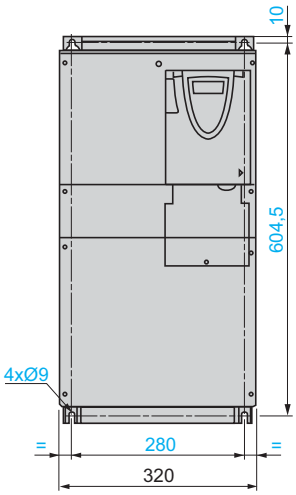

(1) Option cards: I/O extension cards, communication cards or "Controller Inside" programmable card.

Variable speed drives without DC choke
ATV 71HD55M3XD, HD75M3XD, ATV 71HD90N4D...HC28N4D

With or without 1 option card *(1)*

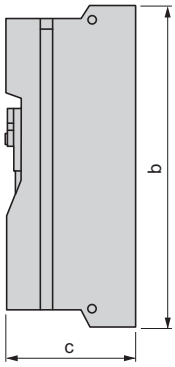

2 option cards *(1)*

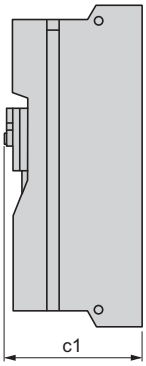

Common front view

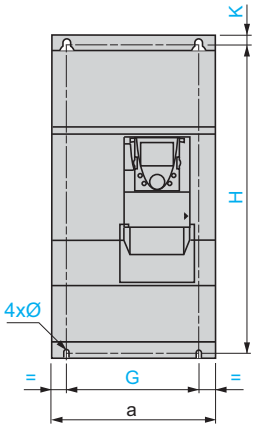

ATV 71HC20N4D…HC28N4D with braking unit VW3 A7 101

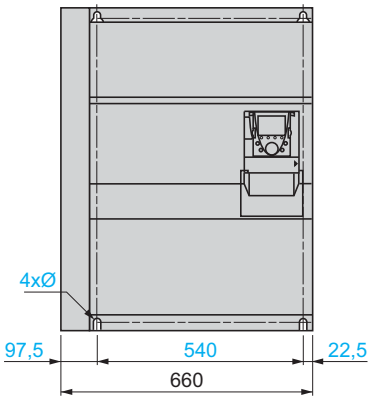

ATV 71H	a	b	c	c1	G	H	K	Ø
D55M3XD, D90N4D	310	680	377	392	250	650	15	11.5
D75M3XD, C11N4D	350	782	377	392	298	758	12	11.5
C13N4D	330	950	377	392	285	920	15	11.5
C16N4D	430	950	377	392	350	920	15	11.5
C20N4D…C28N4D	585	950	377	392	540	920	15	11.5

Variable speed drives without DC choke
ATV 71HC31N4D…HC50N4D

With or without 1 option card *(1)*

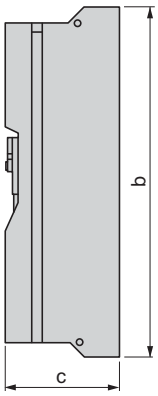

2 option cards *(1)*

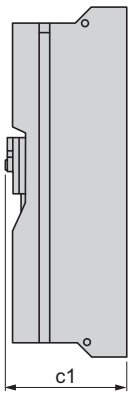

ATV 71HC31N4D, HC40N4D

Front view

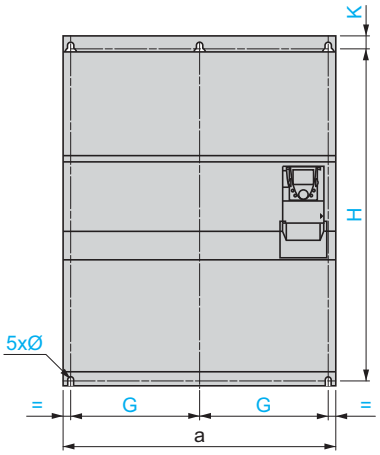

ATV 71HC50N4D

Front view

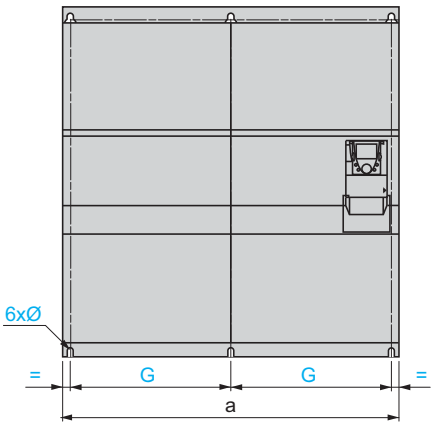

ATV 71H	a	b	c	c1	G	H	K	Ø
C31N4D, C40N4D	880	1150	377	392	417.5	1120	15	11.5
C50N4D	1110	1150	377	392	532.5	1120	15	11.5

(1) Option cards: I/O extension cards, communication cards or "Controller Inside" programmable card.

ATV 71W075N4…WD75N4 variable speed drives

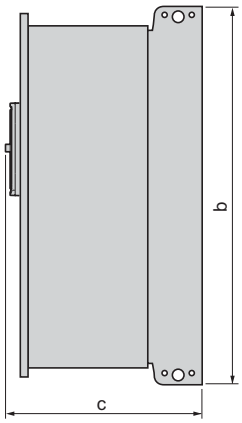

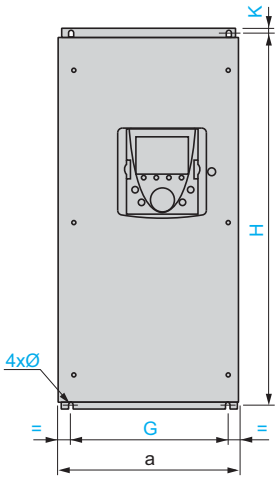

ATV 71W	a	b	c	G	H	K	Ø
075N4…U22N4	240	490	272	200	476	6	6
U30N4, U40N4	240	490	286	200	476	6	6
U55N4, U75N4	260	525	286	220	511	6	6
D11N4	295	560	315	250	544	8	6
D15N4, D18N4	315	665	315	270	647	10	6
D22N4	285	720	315	245	700	10	7
D30N4, D37N4	285	880	343	245	860	10	7
D45N4…D75N4	362	1000	364	300	975	10	9

DNV kits

VW3 A9 621...625

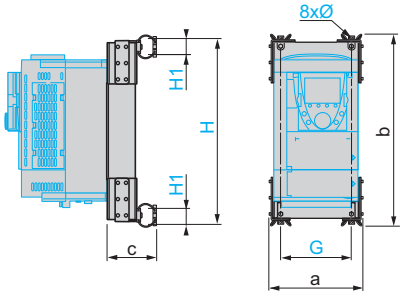

VW3	a	b	c	Ø	G	H	H1
A9 621	148	336	84	5.8	105	324.4	49.4
A9 622	173	370	105	5.8	130	358.4	49.4
A9 623	193	445	121	7	150	424.4	69.4
A9 624	228	455	120	7	190	434.4	69.4
A9 625	248	550	129	7	190	529.4	69.4

VW3 A9 626...628

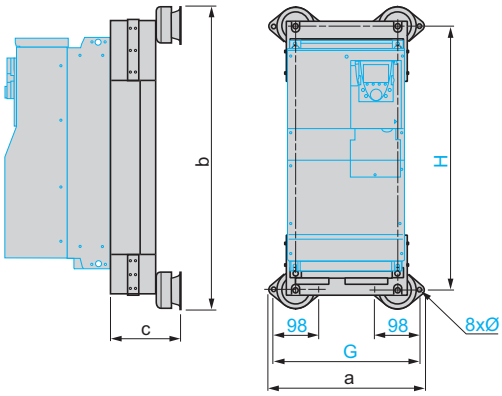

VW3	a	b	c	Ø	G	H
A9 626	320	588	140	9	298	502.5
A9 627	320	716	140	9	298	631
A9 628	400	810	180	9	388	725

VW3 A9 642

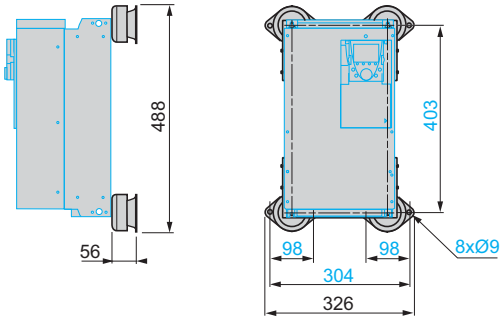

VW3 A9 643

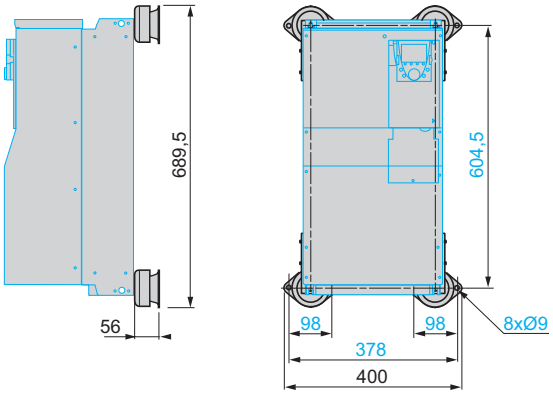

Line choke for DNV kit VW3 A9 643 *(1)*

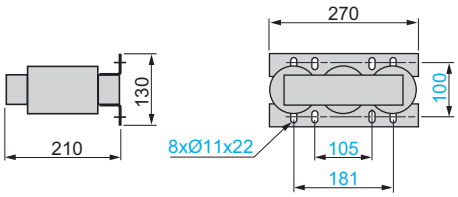

(1) For mounting the line choke upstream of the variable speed drive, see page 28.

EMC input filter for DNV kits VW3 A9 642 and 643 *(1)*

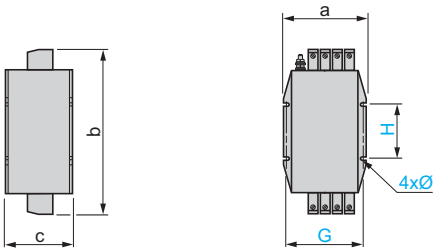

For kit	a	b	c	Ø	G	H
VW3 A9 642	156	237	91	6.6	140	80
VW3 A9 643	171	348	141	6.6	155	115

(1) For mounting the EMC filter next to the variable speed drive, see page 28.

DNV kits (continued)

VW3 A9 629

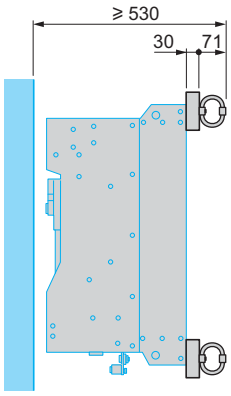

Drill holes and mounting recommendations

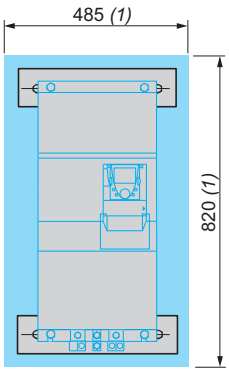

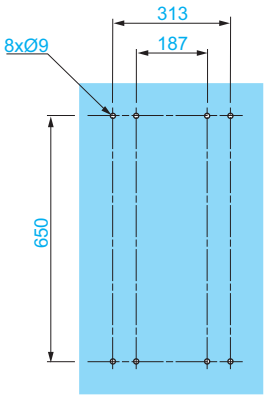

(1) Minimum free area to be left around the drive.

VW3 A9 631

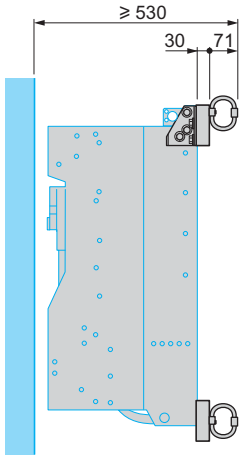

Drill holes and mounting recommendations

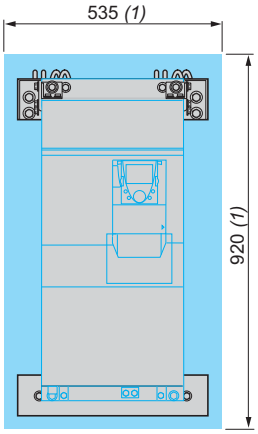

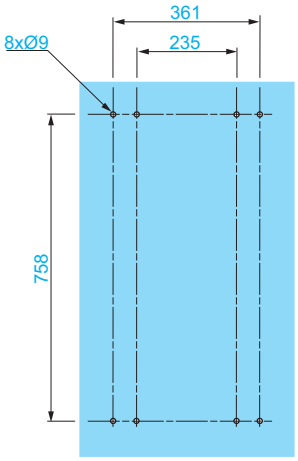

(1) Minimum free area to be left around the drive.

DNV kits (continued)

VW3 A9 633, 635, 637, 638, 644...647

Drill holes and mounting recommendations

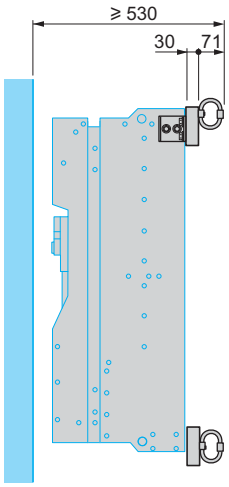

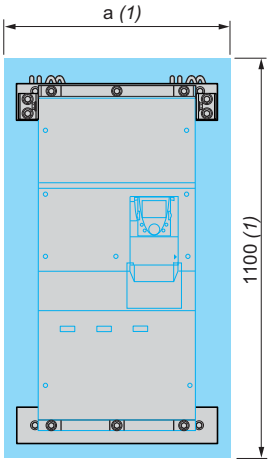

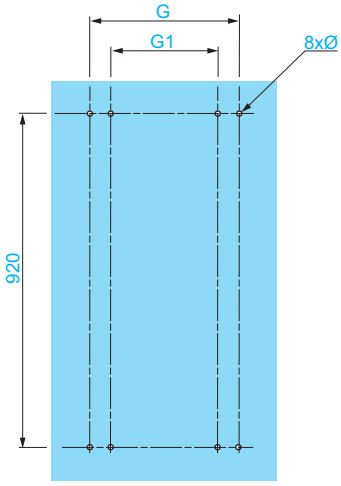

VW3	a	Ø	G	G1
A9 633, 644, 645	520	9	348	222
A9 635	620	9	413	287
A9 637, 638, 646, 647	770	9	603	477

(1) Minimum free area to be left around the drive.

VW3 A9 639, 640

Drill holes and mounting recommendations

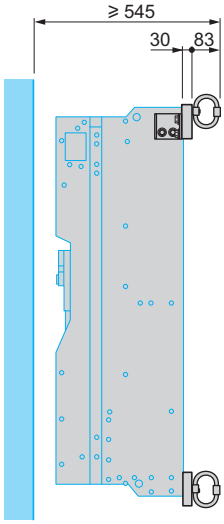

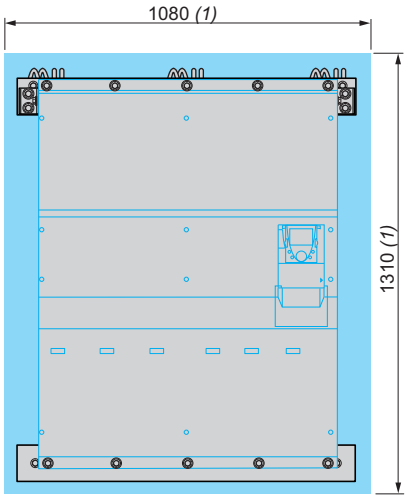

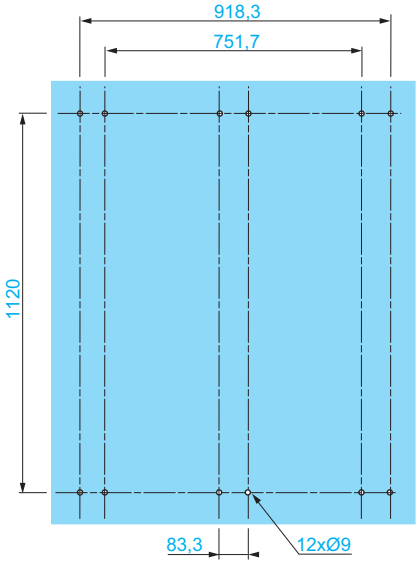

(1) Minimum free area to be left around the drive.

DNV kits (continued)

VW3 A9 641, 648, 649

Drill holes and mounting recommendations

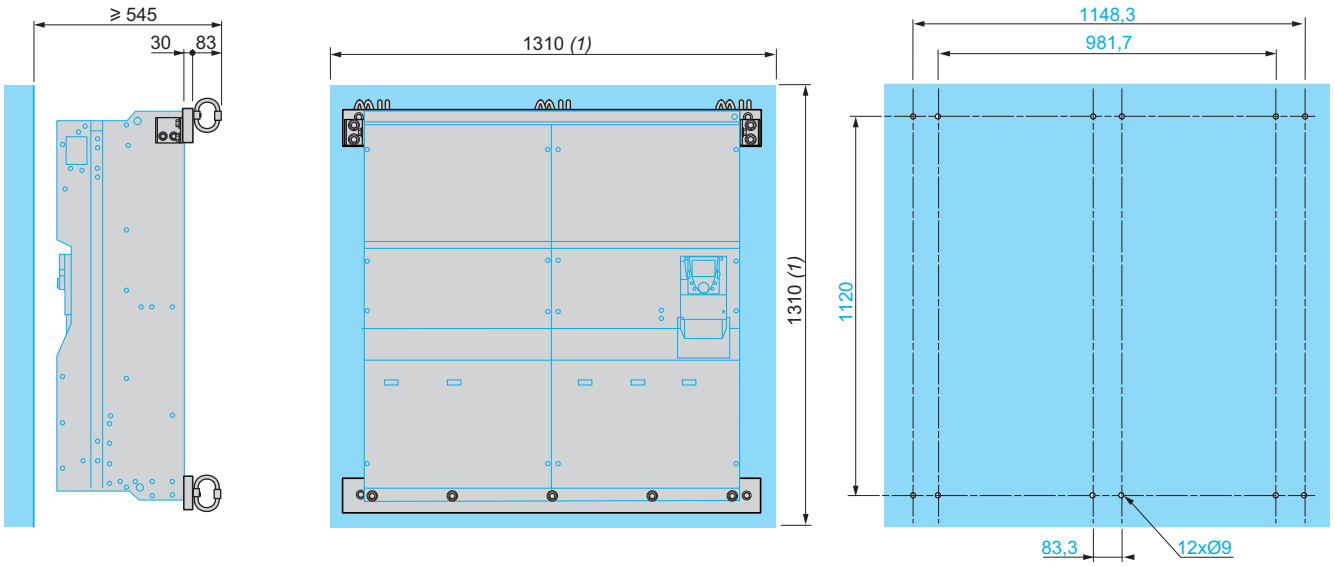

(1) Minimum free area to be left around the drive.

Control card fan kits VW3 A9 404…407

Mounting recommendations

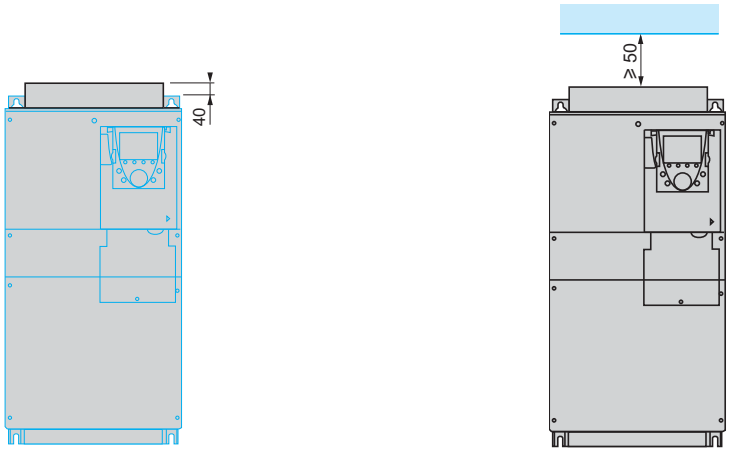

EMC mounting plates *(1)*

For ATV 71H●●●M3, ATV 71HD11M3X, HD15M3X, ATV 71H075N4…HD18N4, ATV 71P●●●N4Z

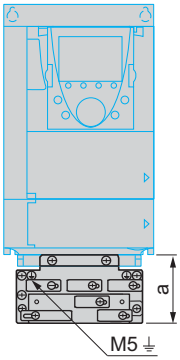

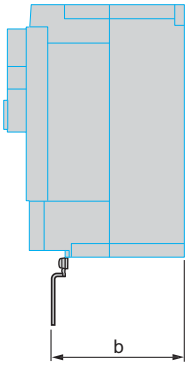

For ATV 71	a	b
H037M3…HU15M3 H075N4…HU22N4 P075N4Z…PU22N4Z	83	70
HU22M3…HU40M3 HU30N4, HU40N4 PU30N4Z, PU40N4Z	83	85
HU55M3 HU55N4, HU75N4 PU55N4Z, PU75N4Z	95	85
HU75M3…HD15M3X HD11N4…HD18N4 PD11N4Z	95	118

For ATV 71HD18M3X…HD45M3X, ATV 71HD22N4…HD75N4, ATV 71HU22Y…HD90Y

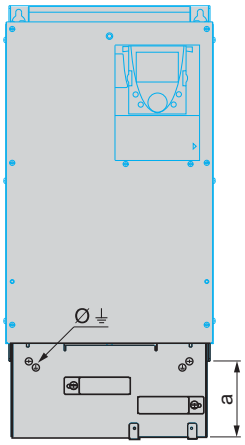

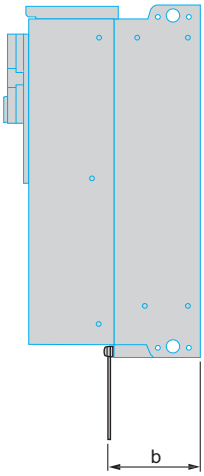

For ATV 71	a	b	Ø
HD18M3X, HD22M3X HD22N4 HU22Y…HD30Y	122	120	M5
HD30N4, HD37N4	113	127	M5
HD30M3X…HD45M3X	118	128	M8
HD45N4…HD75N4 HD37Y…HD90Y	118	173	M8

(1) Supplied with the drive except for ATV 71HD55M3X, HD75M3X, ATV 71HD90N4…HC50N4 or ATV 71HC11Y…HC63Y. In the case of these drives, the mounting plate is supplied with the UL Type 1 or IP 31 conformity kit, which must be ordered separately, see pages 32 and 33. For dimensions, see pages 202 and 203.

Kits for flush-mounting in a dust and damp proof enclosure

Installing the drive using the flush-mounting kit

Side view

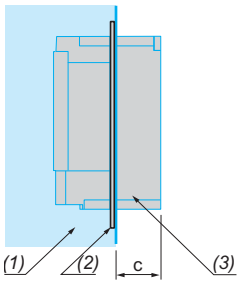

Side view

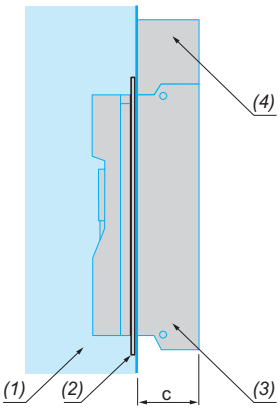

For ATV 71 drives	c	Kit VW3
H037M3, HU15M3, H075N4…HU22N4	60	A9 501
HU22M3…HU55M3, HU30N4…HU75N4	70	A9 502, 503
HU75M3…HD15M3X, HD11N4…HD18N4	90	A9 504, 505
HD18M3X…HD45M3X, HD22N4…HD75N4, HU22Y…HD90Y	105	A9 506…509
HD55M3X, HD55M3XD, HD90N4, HD90N4D	150	A9 510
HD75M3X, HD75M3XD, HC11N4…HC28N4, HC11N4D…HC28N4D, HC11Y…HC31Y	250	A9 511…515

(1) Dust and damp proof enclosure.
(2) Kit for flush-mounting in a dust and damp proof enclosure.
(3) Drive power section outside the enclosure.
(4) DC choke for ATV 71HD55M3X, HD75M3X and ATV 71HD90N4…HC28N4 drives.
Transformer for powering the fan for drives ATV 71HC11Y…HC31Y.

VW3 A9 501…505

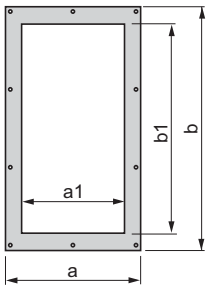

Cut-outs and drill holes

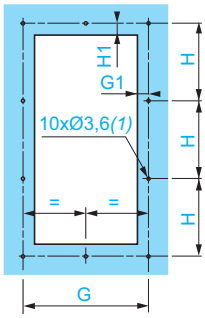

VW3	a	a1	b	b1	G	G1	H	H1
A9 501	222	170	397	351	205	17.5	127	15
A9 502	250	198	429.5	384.5	233	17.5	137.5	14
A9 503	267	215	465	419	250	17.5	149.5	14.5
A9 504	302	250	481.5	438	285	17.5	155	13
A9 505	324.5	270	584.5	537.5	305	17.5	189.5	15.5

(1) Ø 3.6 hole for M4 self-tapping screw.

VW3 A9 506

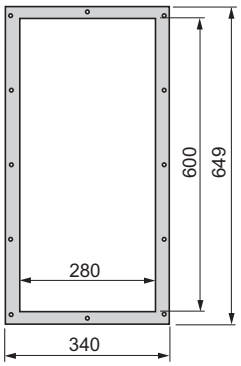

Cut-outs and drill holes

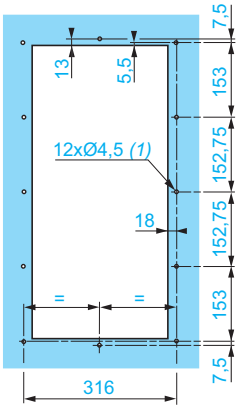

(1) Ø 4.5 hole for M5 self-tapping screw.

VW3 A9 507

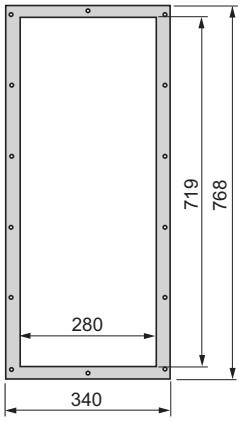

Cut-outs and drill holes

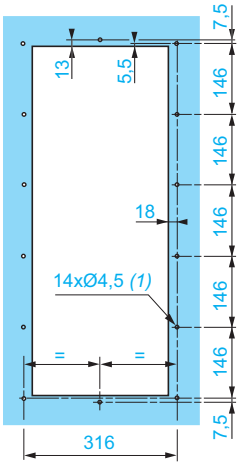

(1) Ø 4.5 hole for M5 self-tapping screw.

VW3 A9 508

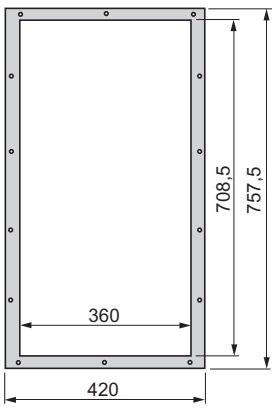

Cut-outs and drill holes

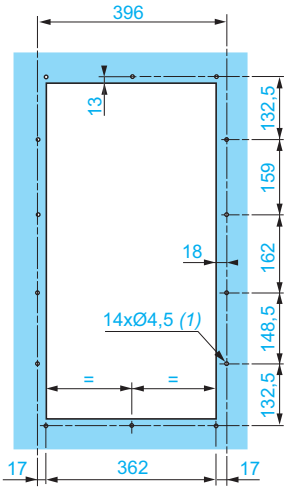

(1) Ø 4.5 hole for M5 self-tapping screw.

Presentation:
page 30

References:
page 30

Functions:
pages 268 to 299

Kits for flush-mounting in a dust and damp proof enclosure (continued)

VW3 A9 509

Cut-outs and drill holes

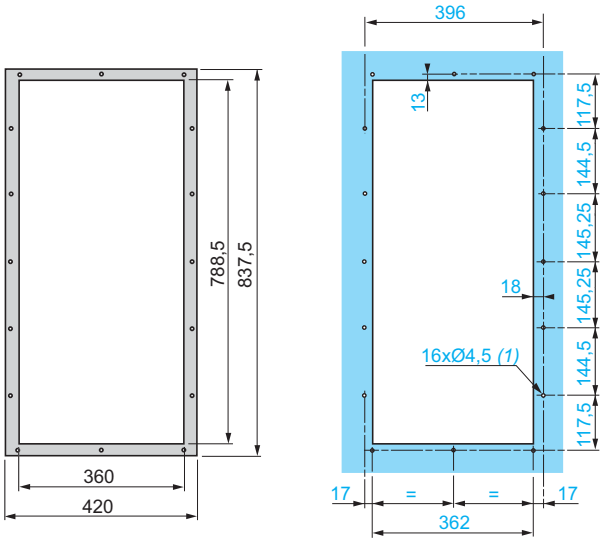

(1) Ø 4.5 hole for M5 self-tapping screw.

VW3 A9 510, 511

Cut-outs and drill holes without DC choke

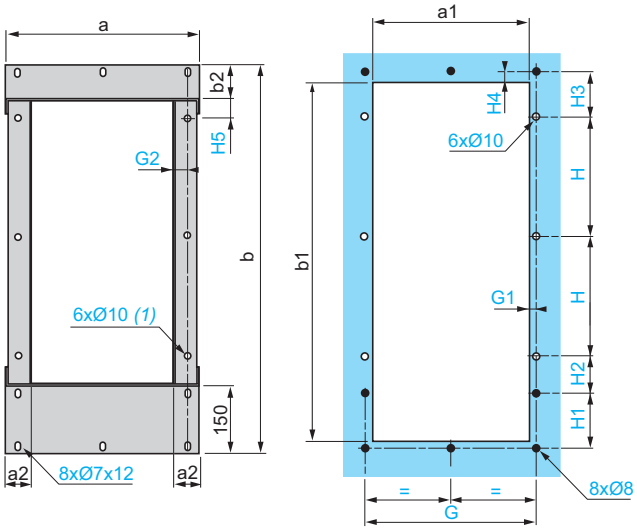

Cut-outs and drill holes with DC choke

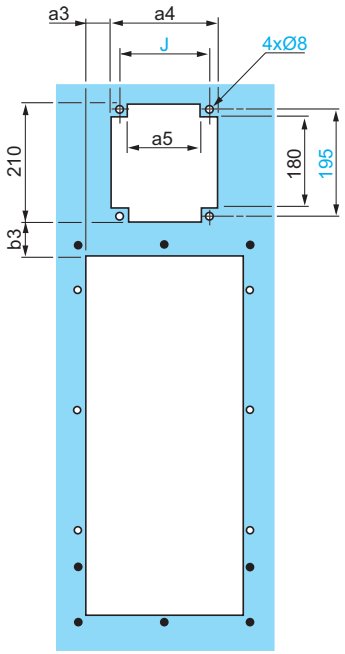

VW3	a	a1	a2	b	b1	b2	G	G1
A9 510	420	340	55	850	790	80	370	15
A9 511	440	360	45	885	845	66	396	18

VW3	G2	H	H1	H2	H3	H4	H5
A9 510	30	260	120	80	100	15	35
A9 511	23	310	70	91.5	83.5	10	27.5

(1) For fixing using an M8 minimum screw.

VW3	a3	a4	a5	b3	J
A9 510	82.5	180	120	45	150
A9 511	87.5	190	130	35	160

Kits for flush-mounting in a dust and damp proof enclosure (continued)

VW3 A9 512, 513

Cut-outs and drill holes without DC choke

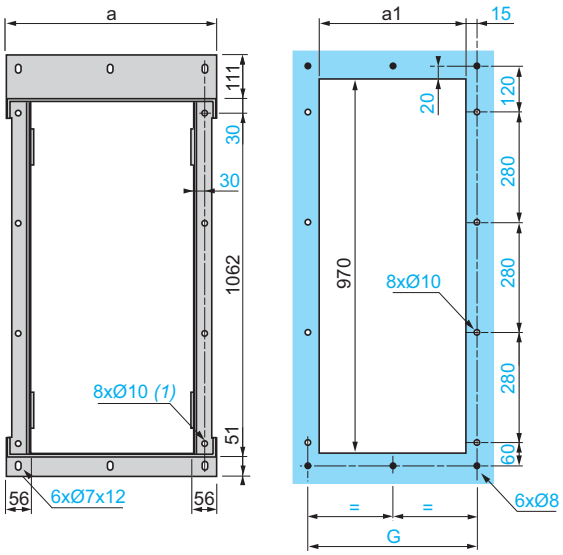

VW3	a	a1	G
A9 512	442	360	390
A9 513	542	460	490

(1) For fixing using an M8 minimum screw.

VW3 A9 512

Cut-outs and drill holes with DC choke or transformer for fan

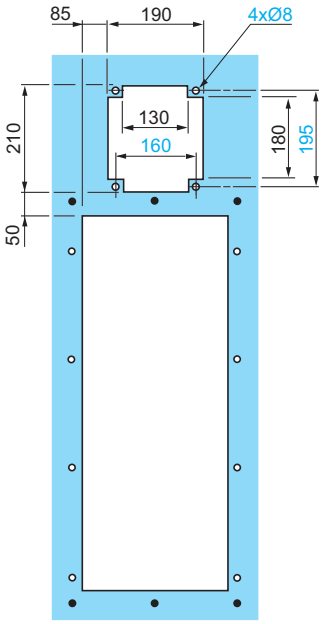

VW3 A9 513

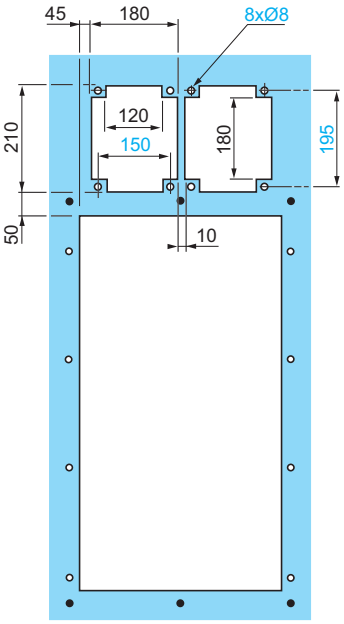

VW3 A9 514 (without braking unit), VW3 A9 515 (with braking unit)

Cut-outs and drill holes without DC choke

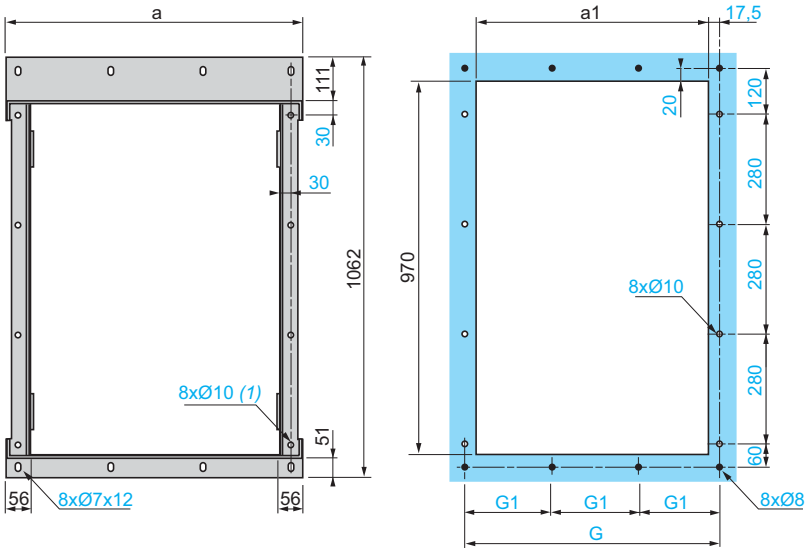

VW3	a	a1	G	G1
A9 514	697	610	645	215
A9 515	772	685	720	240

(1) For fixing using an M8 minimum screw.

Cut-outs and drill holes with DC choke or transformer for fan

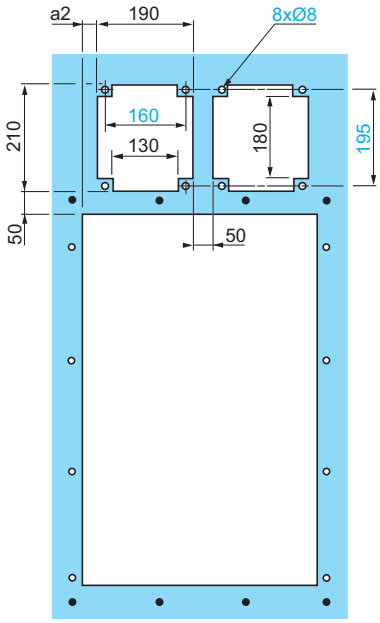

VW3	a2
A9 514	90
A9 515	165

Presentation:
page 30

References:
page 30

Functions:
pages 268 to 299

Kits for mounting in a dust and damp proof enclosure

VW3 A9 801...803

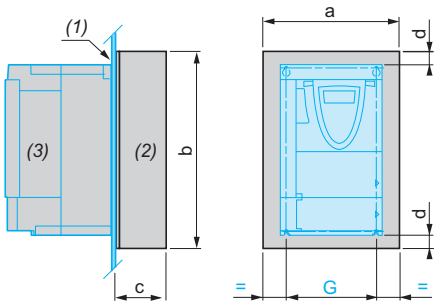

Drill holes in the enclosure

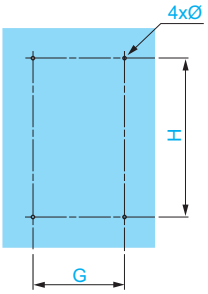

VW3	a	b	c	d	G	H	Ø
A9 801	150	226	80	2	113.5	220	M4
A9 802	175	450	80	95	138	249	M4
A9 803	300	700	83	203	158	283	M5

(1) Enclosure plate
(2) Kit VW3 A9 801, VW3 A9 802 or VW3 A9 803
(3) ATV 71P●●●N4Z drive

UL Type 1 conformity kits VW3 A9 2●●, IP 21 or IP 31 conformity kits VW3 A9 1●●

VW3 A9 201...205, 101...105

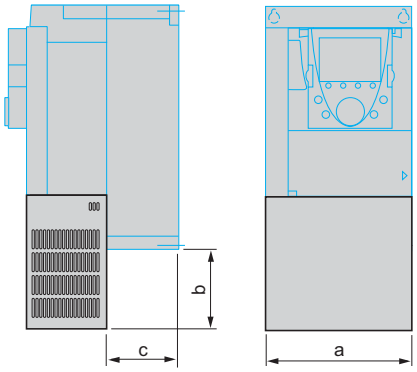

VW3 A9 206...208, 217, 106...108, 117

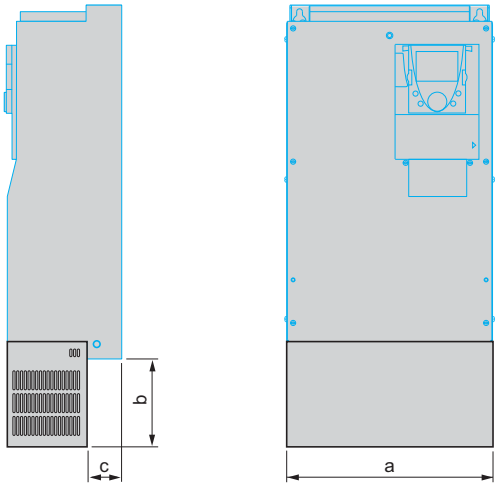

VW3	a	b	c
A9 201	132.6	32	60
A9 202	155	35	70
A9 203	176	32	70
A9 204	211.6	36	90
A9 205	231.6	40	90
A9 101	132.6	115	60
A9 102	155	105	70
A9 103	176	115	70
A9 104	211.6	115	90
A9 105	231.6	130	90

VW3	a	b	c
A9 206	240	60	102
A9 207	240	52	102
A9 217	320	48	102
A9 208	320	136	116
A9 106	240	186	102
A9 107	240	178	102
A9 117	320	180	102
A9 108	320	180	116

UL Type 1 conformity kits VW3 A9 2●●, IP 21 or IP 31 conformity kits VW3 A9 1●● (continued)

VW3 A9 209…214, VW3 A9 109…116

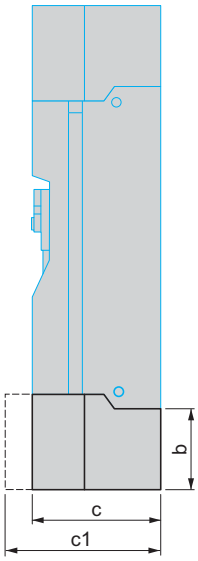

VW3 A9 209…213, VW3 A9 109…113, 115

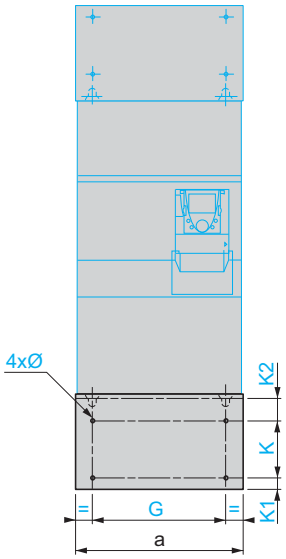

VW3 A9 214, 114 (with braking unit)

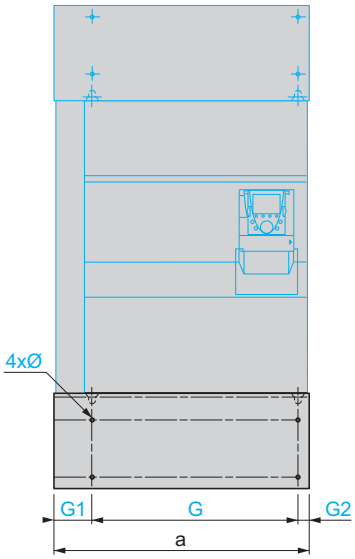

VW3 A9 116

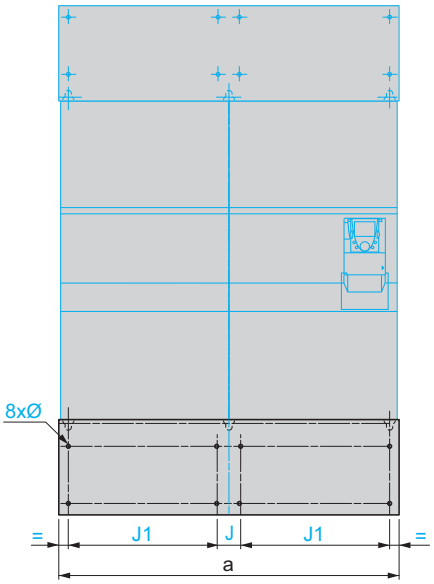

VW3	a	b	c	c1	G	G1	G2	K	K1	K2	Ø	J	J1
A9 209	334	220	377	–	250	–	–	95	65	75	11.5	–	–
A9 210	374	300	377	–	298	–	–	172	65	75	11.5	–	–
A9 211	345	315	377	–	285	–	–	250	65	75	11.5	–	–
A9 212	445	375	377	–	350	–	–	250	65	75	11.5	–	–
A9 213	600	375	377	–	540	–	–	250	65	75	11.5	–	–
A9 214	670	375	377	–	540	102	27	250	65	75	11.5	–	–
A9 109	334	220	377	–	250	–	–	95	65	75	11.5	–	–
A9 110	374	300	377	–	298	–	–	172	65	75	11.5	–	–
A9 111	345	315	377	–	285	–	–	250	65	75	11.5	–	–
A9 112	445	375	377	–	350	–	–	250	65	75	11.5	–	–
A9 113	600	375	377	–	540	–	–	250	65	75	11.5	–	–
A9 114	670	375	377	–	540	102	27	250	65	75	11.5	–	–
A9 115	895	475	–	477	835	–	–	350	65	75	11.5	–	–
A9 116	1125	475	–	477	–	–	–	350	65	75	11.5	70	495

Remote graphic display terminal

IP 54 kit VW3 A1 102

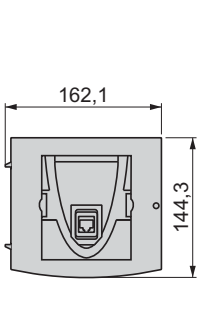

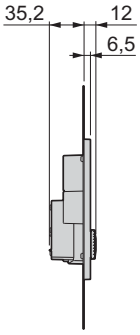

Cut-outs and drill holes

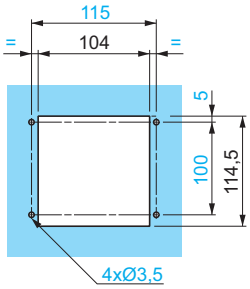

IP65 door VW3 A1 103

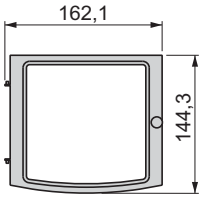

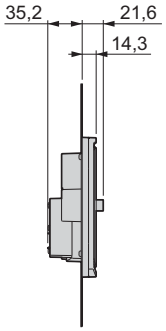

Braking units VW3 A7 101 *(1)*, VW3 A7 102…104

VW3 A7 102…104

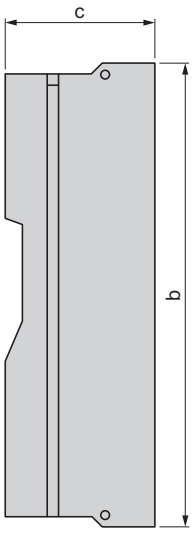

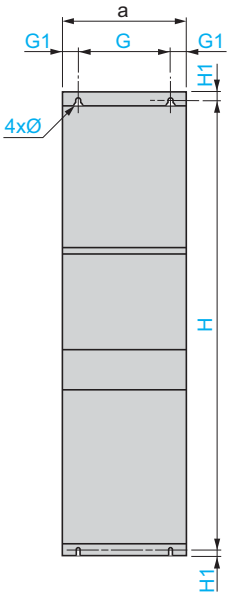

VW3	a	b	c	G	G1	H	H1	Ø
A7 101 *(1)*	75	950	377	–	–	–	–	–
A7 102…104	310	1150	377	265	22.5	1120	15	11.5

(1) Braking unit VW3 A7 101 can only be mounted on the left side of the drive, see page 189.

Braking resistors

VW3 A7 701…703

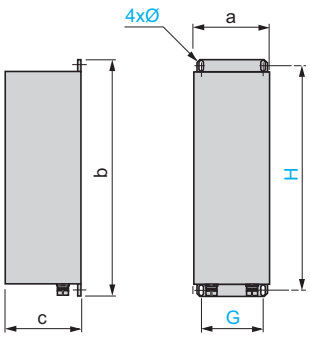

VW3	a	b	c	G	H	Ø
A7 701	95	293	95	70	275	6 x 12
A7 702	95	293	95	70	375	6 x 12
A7 703	140	393	120	120	375	6 x 12

Mounting recommendations

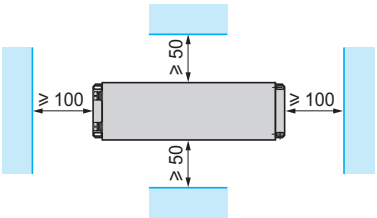

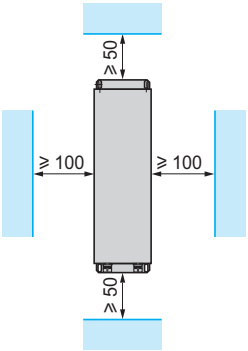

Presentation: pages 108, 134 and 136
Characteristics: pages 134 and 136
References: pages 108, 135 and 137
Schemes: pages 226 and 235
Functions: pages 268 to 299

Braking resistors (continued)

VW3 A7 704...709

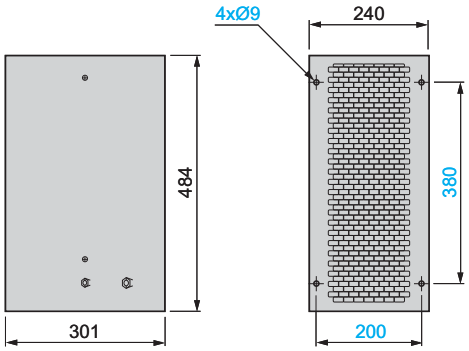

Mounting recommendations

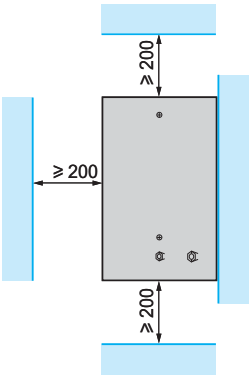

VW3 A7 710...712, 715...718 *(1)*

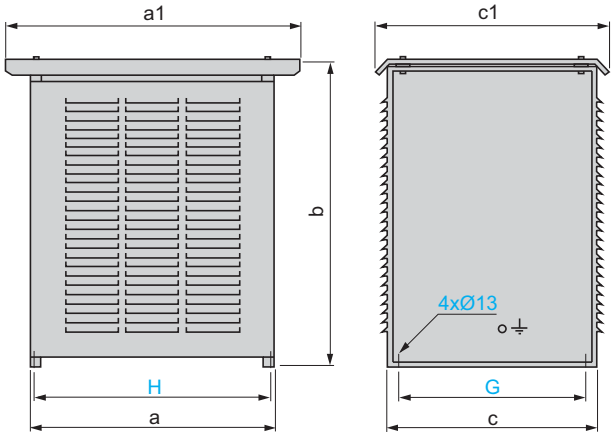

Mounting recommendations

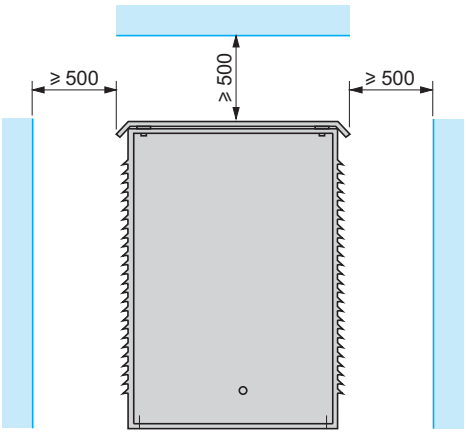

VW3	a	a1	b	c	c1	G	H
A7 710	860	1040	690	480	560	400	832
A7 711	960	1140	1150	380	460	300	932
A7 712	860	1040	1150	540	620	460	832
A7 715	960	1140	1150	540	620	460	932
A7 716 *(1)*	960	1140	1150	740	820	660	932
A7 717 *(1) (2)*	960	1140	1150	540	620	460	932
A7 718 *(1) (2)*	960	1140	1150	740	820	660	932

(1) For mounting in series or parallel, a space of 300 mm must be left between each resistor.
(2) The dimension is given for 1 component. References VW3 A7 717, 718 comprise two components; all components must be taken into account to determine the overall dimensions. A space of 300 mm must be left between each component.

VW3 A7 713, 714

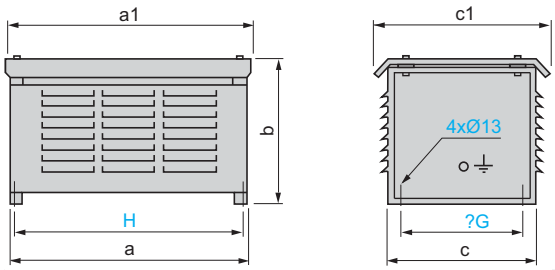

Mounting recommendations

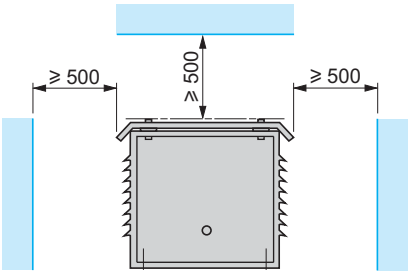

VW3	a	a1	b	c	c1	G	H
A7 713	760	790	440	480	540	400	732
A7 714	960	990	440	480	540	400	932

Hoist resistors

VW3 A7 801...804, 807...809

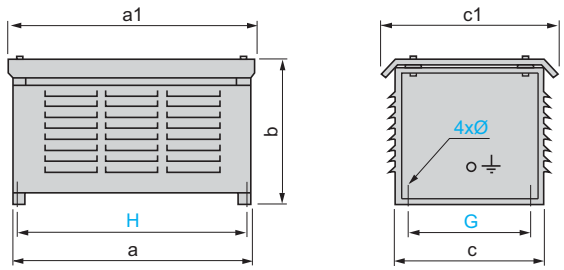

Mounting recommendations

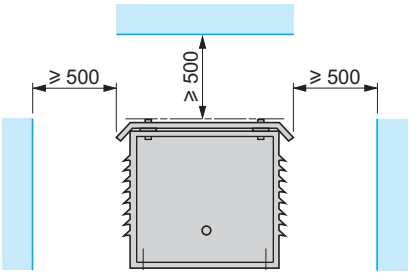

VW3	a	a1	b	c	c1	G	H	Ø
A7 801	490	452	203.5	153	202	95	470	10
A7 802	420	450	452	480	540	400	392	13
A7 803	580	610	452	480	540	400	552	13
A7 804	960	990	452	480	540	400	932	13
A7 807	860	890	452	480	540	400	832	13
A7 808	860	890	743	480	540	400	832	13
A7 809	860	890	743	480	450	400	832	13

VW3 A7 805, 806, 810...818 *(1)*

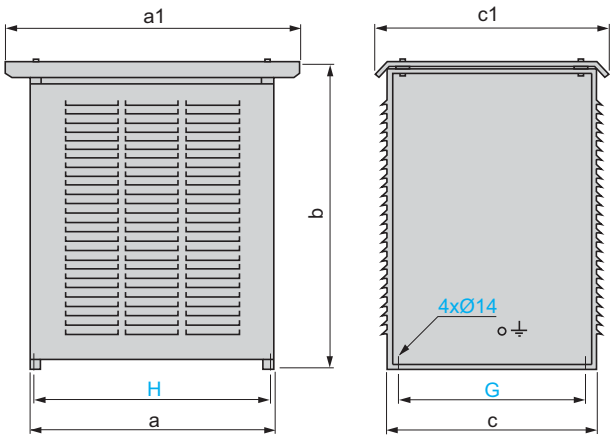

Mounting recommendations

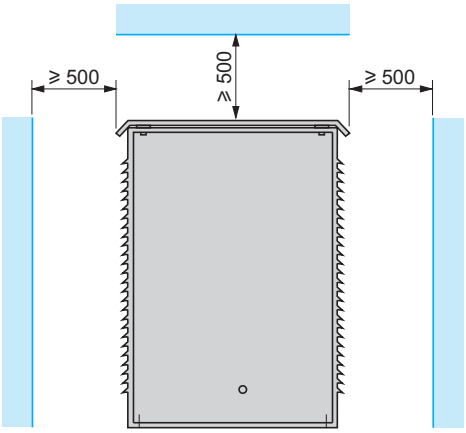

VW3	a	a1	b	c	c1	G	H
A7 805 *(1)*	860	1040	1150	540	620	460	832
A7 806 *(1)*	860	1040	1150	740	820	660	832
A7 810	860	1040	1150	540	620	460	832
A7 811	960	1140	1150	540	620	460	932
A7 812	960	1140	1150	740	820	660	932
A7 813 *(2)*	960	1140	1150	540	620	460	932
A7 814 *(1) (2)*	960	1140	1150	540	620	460	932
A7 815 *(2)*	960	1140	1150	740	820	660	932
A7 816 *(1) (2)*	960	1140	1150	740	820	660	932
A7 817 *(2)*	960	1140	1700	740	820	660	932
A7 818	960	1140	1150	740	820	660	932

(1) For mounting in series or parallel, a space of 300 mm must be left between each resistor.
(2) The dimension is given for 1 component. References VW3 A7 813...815 comprise 2 components and references VW3 A7 816 and 817 comprise 3 components; all components must be taken into account to determine the overall dimensions. A space of 300 mm must be left between each component.

Network braking units

VW3 A7 201…205, 231, 232

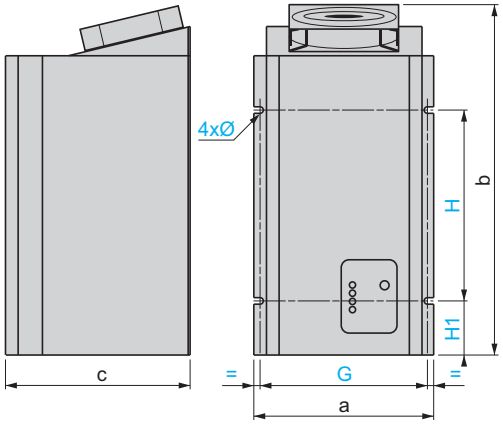

Mounting recommendations

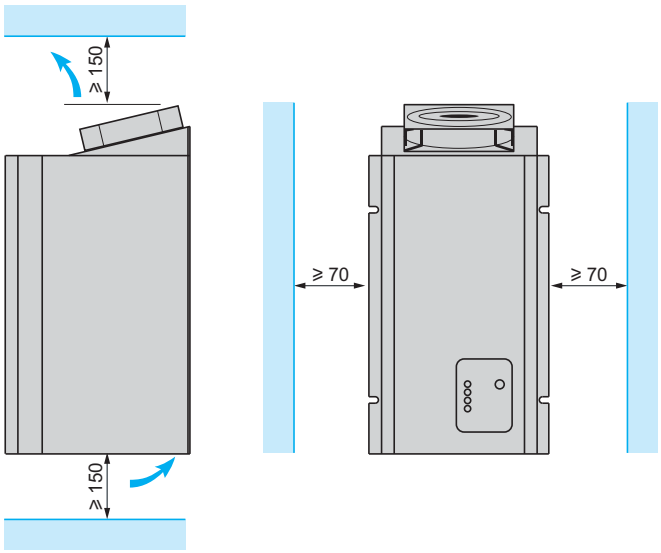

VW3	a	b	c	G	H	H1	Ø
A7 201, 202	270	500	295	260	260	80	7
A7 203…205, A7 231…232	270	580	295	260	340	80	7

VW3 A7 206…208, 233…237

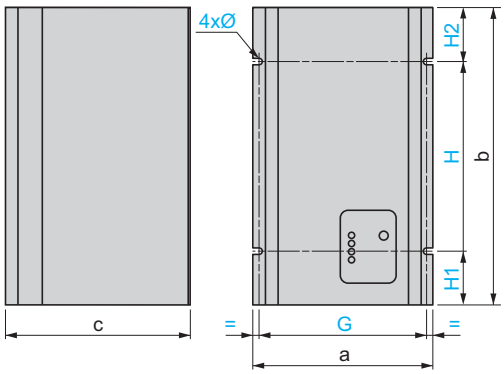

Mounting recommendations

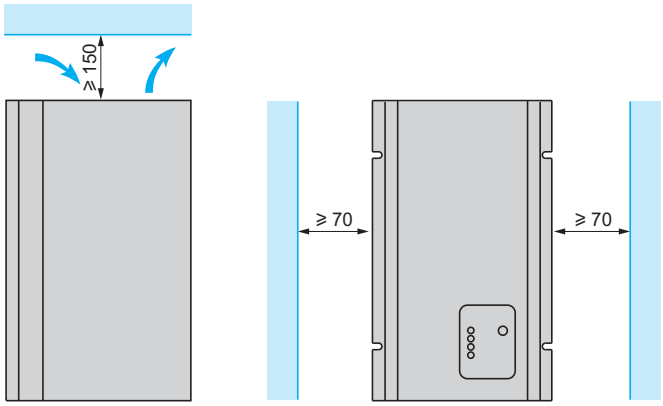

VW3	a	b	c	G	H	H1	H2	Ø
A7 206…208	245	700	272	260	440	80	180	7
A7 233…237	272	700	295	260	440	80	180	7

Network braking units (continued)

VW3 A7 209, 210, 238, 239

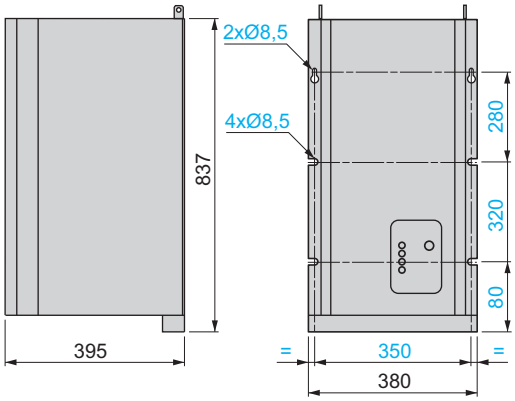

Mounting recommendations

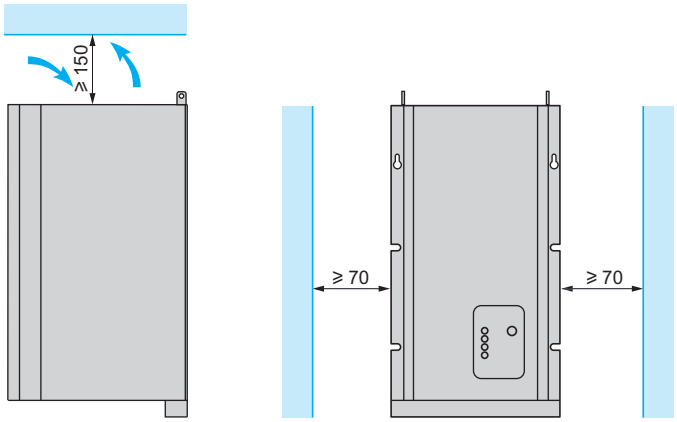

VW3 A7 211, 212, 240, 241

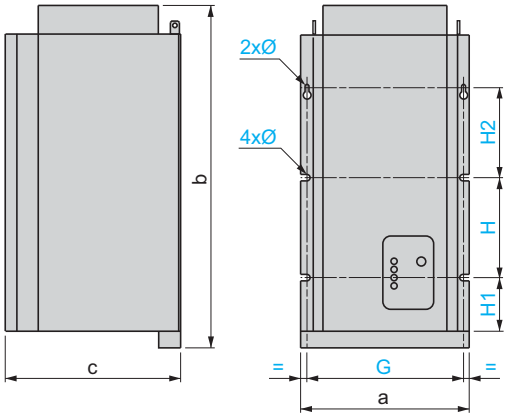

Mounting recommendations

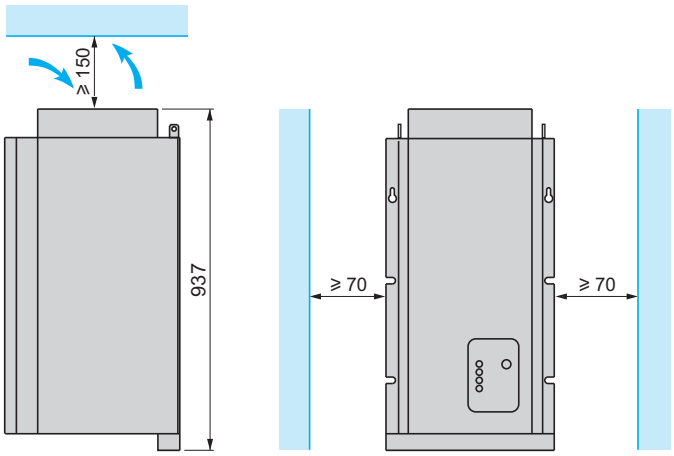

VW3	a	b	c	G	H	H1	H2	Ø
A7 211, 240	380	937	395	350	320	80	280	8.5
A7 212, 241	380	1037	395	350	320	80	280	8.5

Variable speed drives

Altivar 71

DC chokes, line chokes

DC chokes

VW3 A4 501...510

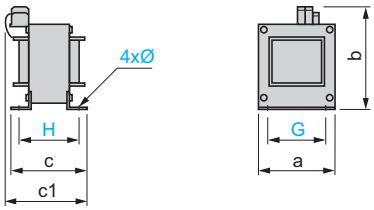

VW3	a	b	c	c1	G	H	Ø
A4 501	60	103	60	95	50	51	3.5
A4 502	60	103	77	118	50	68	3.5
A4 503	96	134	80	115	80	65	5.5
A4 504	96	134	79	115	80	64	5.5
A4 505	96	134	85	120	80	70	5.5
A4 506	96	134	89	120	80	74	5.5
A4 507	96	134	99	130	80	84	5.5
A4 508	108	142	112	145	90	97	5.5
A4 509	96	134	89	120	80	74	5.5
A4 510	126	171	120	170	105	103	7

VW3 A4 511, 512

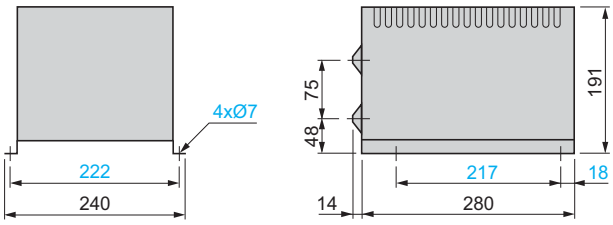

Line chokes

VW3 A58501, A58502

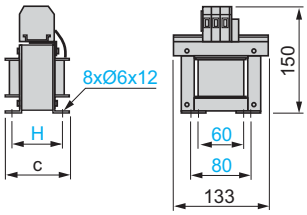

VW3	c	H
A58501	95	65
A58502	105	77

VW3 A4 551...555

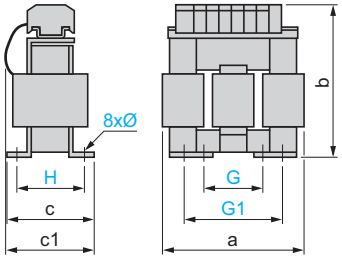

VW3	a	b	c	c1	G	G1	H	Ø
A4 551	100	135	55	60	40	60	42	6 x 9
A4 552, A4 553	130	155	85	90	60	80.5	62	6 x 12
A4 554	155	170	115	135	75	107	90	6 x 12
A4 555	180	210	125	165	85	122	105	6 x 12

VW3 A4 556

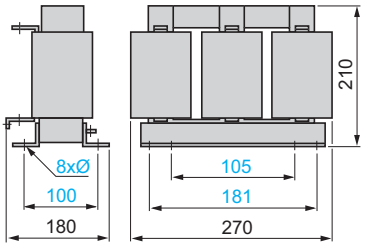

VW3	Ø
A4 556	11 x 22

VW3 A4 557

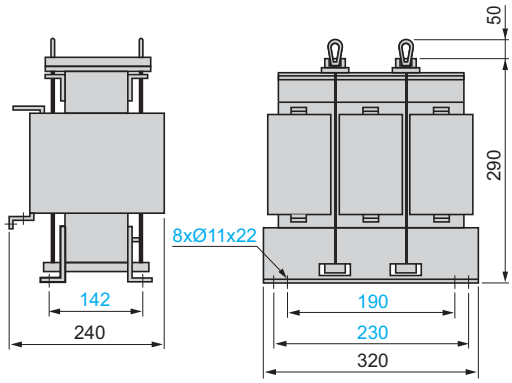

VW3 A4 558...565, 568...572

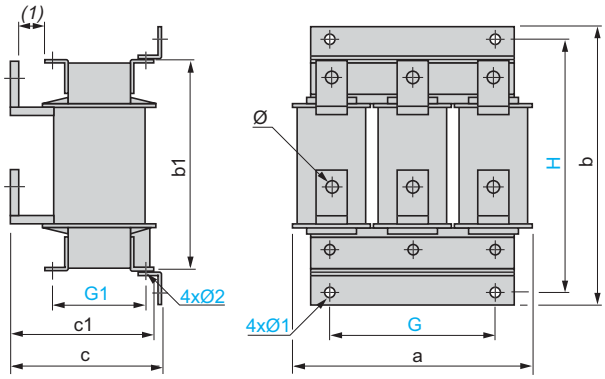

VW3	a	b	b1	c	c1	G	G1	H	Ø	Ø1	Ø2
A4 558, 570	280	305	240	210	200	200	125	275	9	9	9
A4 559	280	330	260	210	200	200	125	300	11	9	9
A4 560, 561, 568	320	380	300	210	200	225	150	350	11	9	9
A4 562...564	320	380	300	250	230	225	150	350	13	11	11
A4 565	385	440	340	275	250	300	125	400	2 x Ø13	13.5	13.5
A4 569	320	380	300	250	230	225	150	350	13	11	11
A4 571	385	440	340	265	245	300	150	400	13	13	13
A4 572	385	440	340	305	245	300	150	400	13	13	13

(1) 25 mm minimum.

Presentation: pages 152 and 156
Characteristics: pages 155 and 159
References: pages 155 and 160
Schemes: pages 222 to 225
Functions: pages 268 to 299

Passive filters VW3 A4 601…609, 621…627, 641…648, 661…666

Mounting recommendations *(1)*

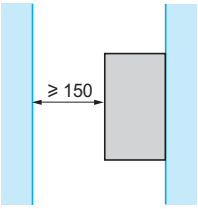

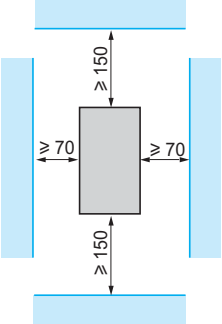

VW3 A4 601…604, 621, 622, 641…644, 661…663

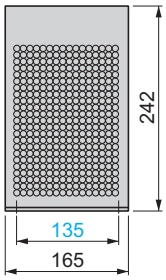

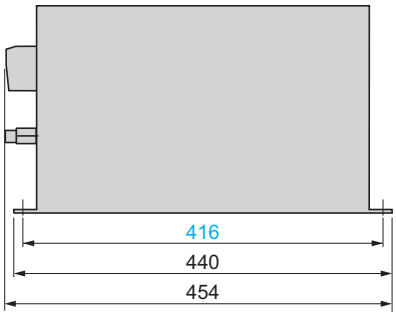

VW3 A4 605…609, 623…627, 645…648, 664…666

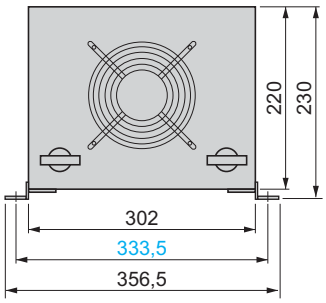

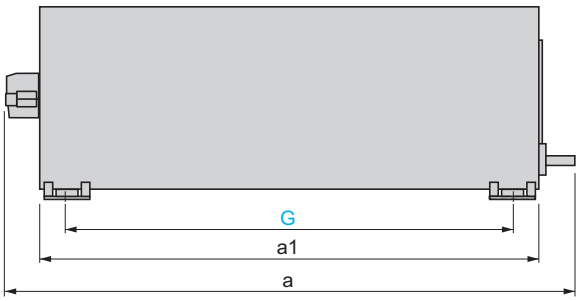

VW3	a	a1	G
A4 605, 606, 623…625, 645, 646, 664, 665	698	600	532.5
A4 607…609, 626, 627, 647, 648, 666	938	840	772.5

(1) Vertical mounting only

Passive filters VW3 A4 610…613, 619, 628…633, 639, 649…651, 656, 657, 667…671, 676, 677 (continued)

Mounting recommendations *(1)*

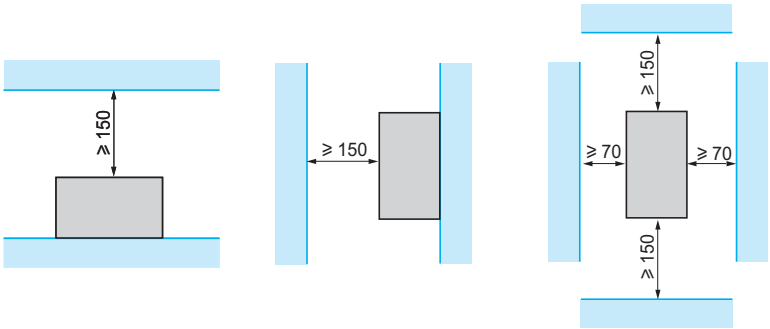

VW3 A4 610…613, 619, 628…632, 639, 649…651, 656, 657, 667…670, 676, 677

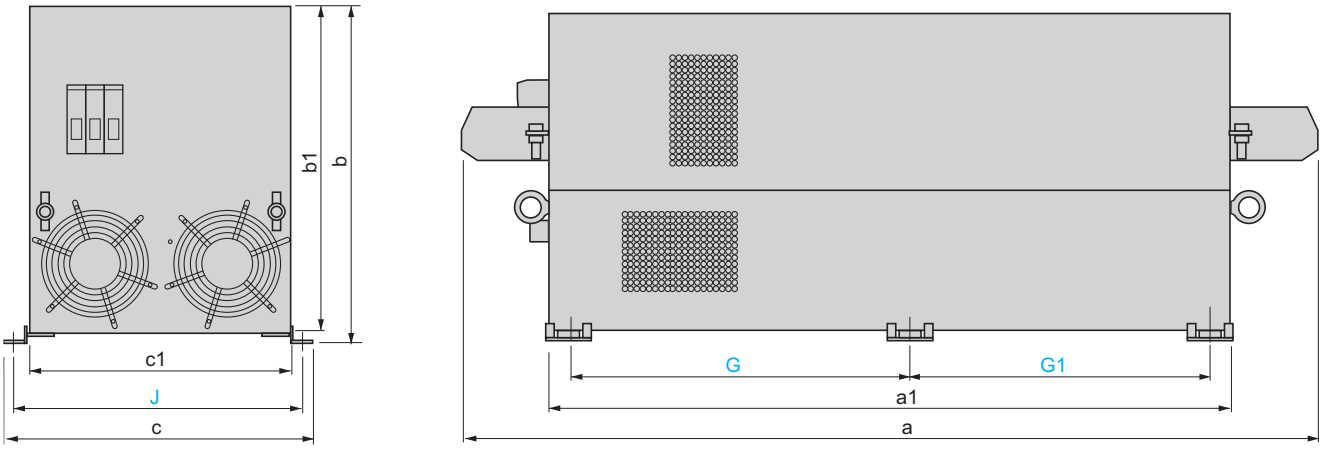

VW3	a	a1	b	b1	c	c1	G	G1	J
A4 610, 611, 628, 629, 649, 667, 668	1060	830	400	390	393	345	395	377	370
A4 612, 619, 630, 631, 650, 656, 657, 669	1160	900	419	409	454	406	430	412	430
A4 613, 632, 639, 651, 670, 676, 677	1330	1070	419	409	454	406	515	497	430

VW3 A4 633, 671

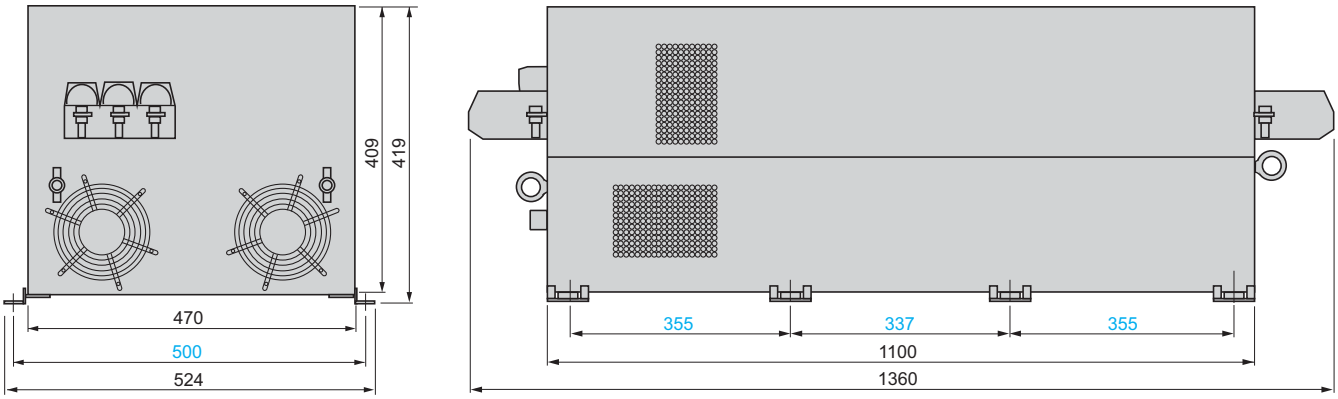

(1) Horizontal or vertical mounting

Additional EMC input filters

VW3 A4 401...404

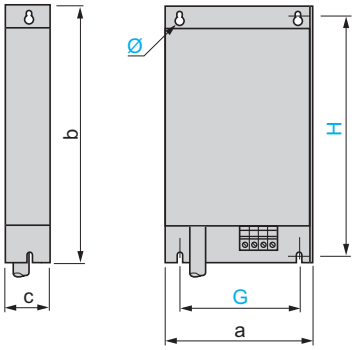

VW3 A4 405, 409

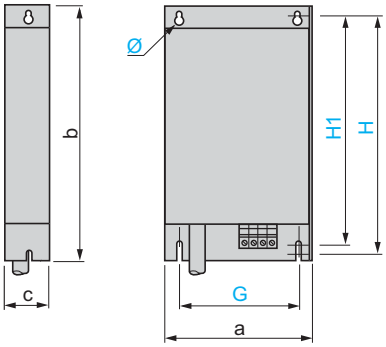

VW3	a	b	c	G	H	H1	Ø
A4 401	130	290	40	105	275	–	4.5
A4 402	155	324	50	130	309	–	4.5
A4 403	175	370	60	150	355	–	6.5
A4 404	210	380	60	190	365	–	6.5
A4 405	230	498.5	62	190	479.5	460	6.5
A4 409	230	498.5	62	190	479.5	460	6.5

VW3 A4 406...408

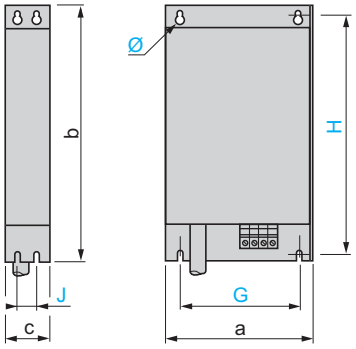

VW3	a	b	c	G	H	J	Ø
A4 406	240	522	79	200	502.5	40	9
A4 407	240	650	79	200	631	40	9
A4 408	320	750	119	280	725	80	9

Mounting the filter under the drive

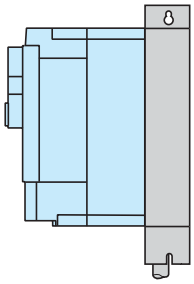

Front view

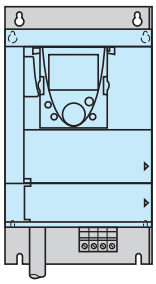

Mounting the filter next to the drive

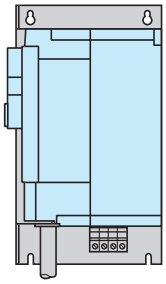

Front view

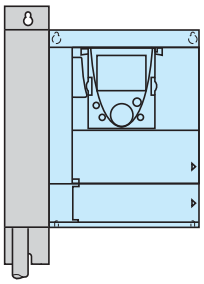

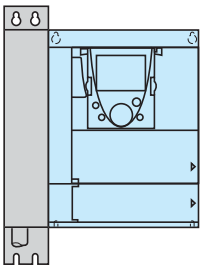

Additional EMC input filters (continued)

VW3 A4 410…413

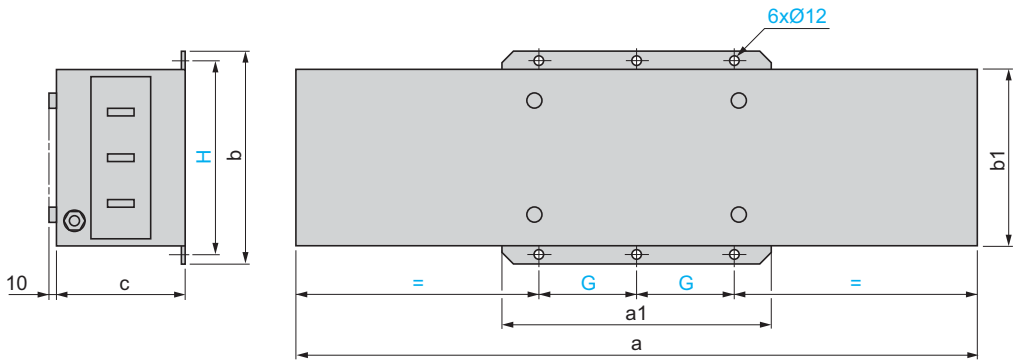

VW3	a	a1	b	b1	c	G	H
A4 410	800	302	261	219	139	120	235
A4 411	800	302	261	219	139	120	235
A4 412	900	352	281	239	174	145	255
A4 413	1000	401	301	259	164	170	275

IP 30 protection kits for filters VW3 A4 410…413

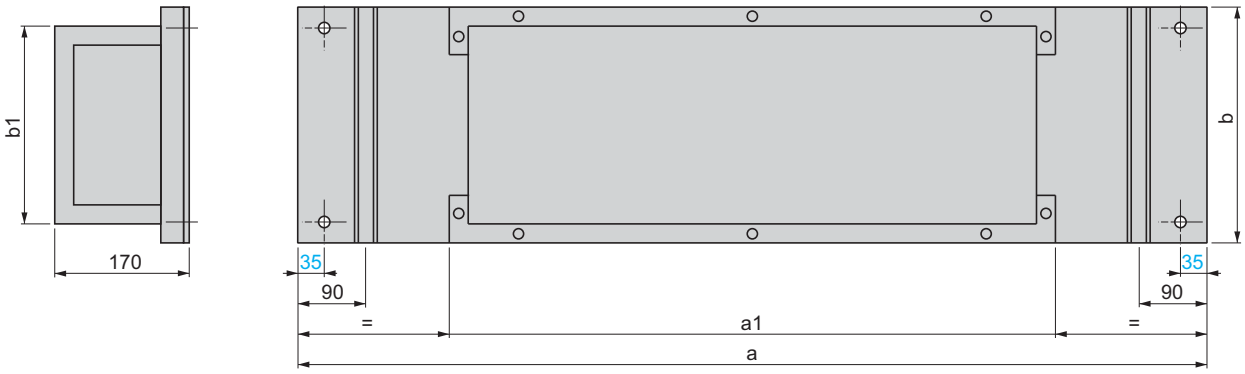

VW3	a	a1	b	b1
A9 601	1200	800	310	270
A9 602	1400	1000	350	310

Motor chokes *(1)*

VW3 A5 101, 102

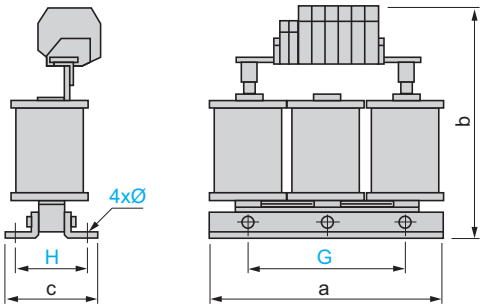

Mounting recommendations *(2)*

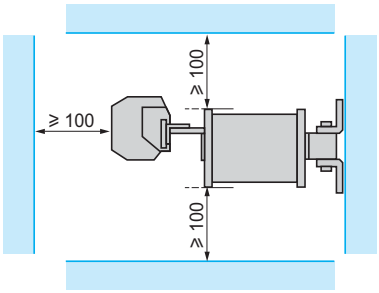

VW3	a	b	c	G	H	Ø
A5 101	190	210	90	170	45	8 x 12
A5 102	190	235	120	170	48	8 x 12

VW3 A5 103

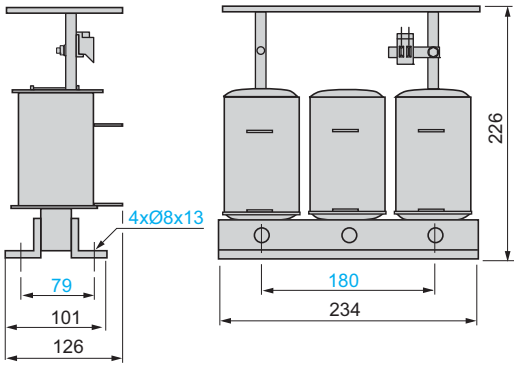

Mounting recommendations *(2)*

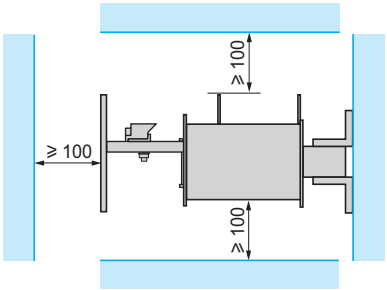

(1) It is absolutely essential that the motor chokes are mounted on a metal support (grille, frame, etc.)
(2) Because of the magnetic field and/or the heat dissipation, it is essential to follow the mounting recommendations provided.

Motor chokes (continued) *(1)*

VW3 A5 104, 105 *(2)*

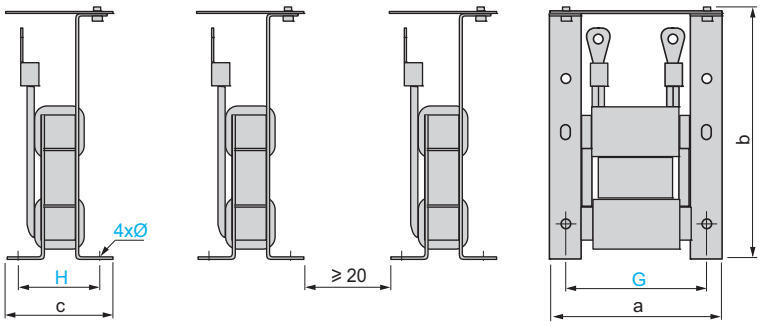

VW3	a	b	c	G	H	Ø
A5 104	170	250	100	150	75	9 x 13
A5 105	210	250	110	175	75	9 x 13

Mounting recommendations *(3)*

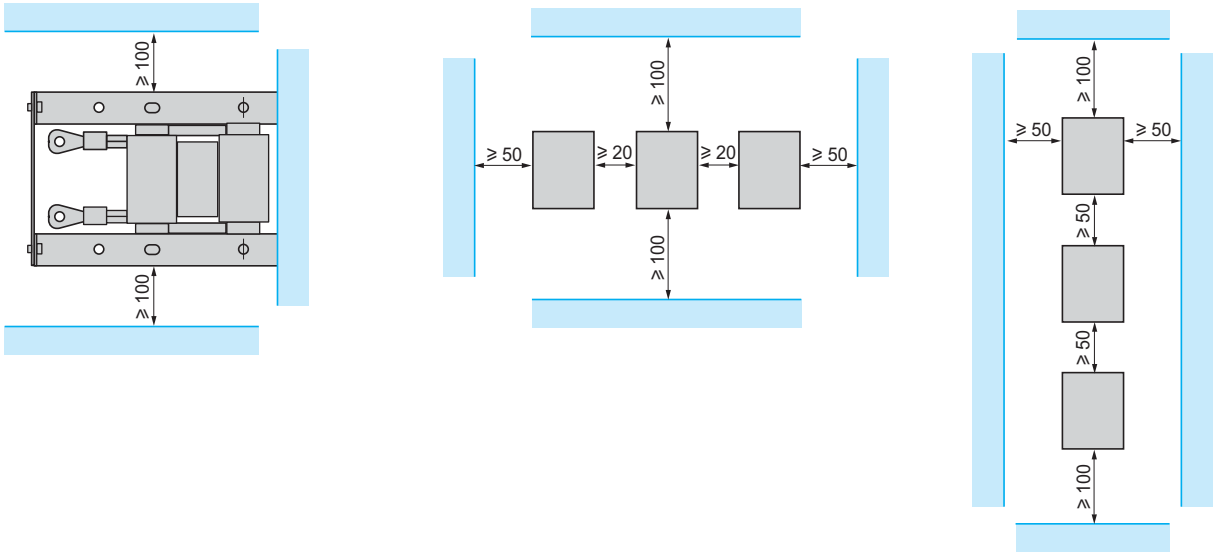

(1) It is absolutely essential that the motor chokes are mounted on a metal support (grille, frame, etc.)
(2) References VW3 A5 104 and 105 comprise 3 components.
(3) Because of the magnetic field and/or the heat dissipation, it is essential to follow the mounting recommendations provided.

Motor chokes (continued) *(1)*

VW3 A5 106…108 *(2)*

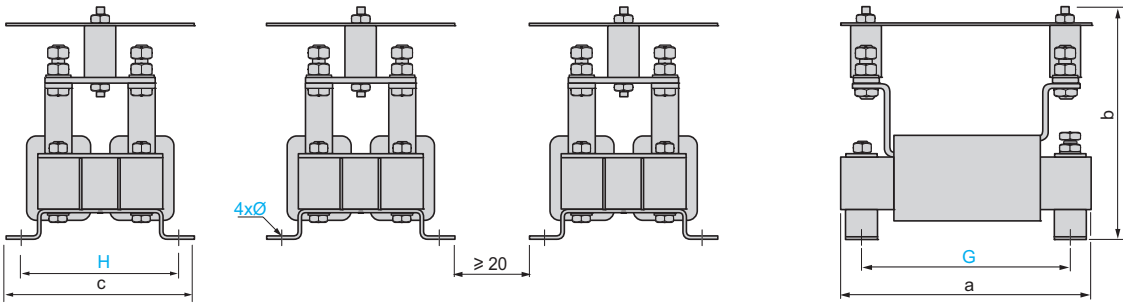

VW3	a	b	c	G	H	Ø
A5 106	245	250	200	225	175	9 x 13
A5 107	315	250	210	275	200	9 x 13
A5 108	370	250	230	325	200	9 x 13

Mounting recommendations *(3)*

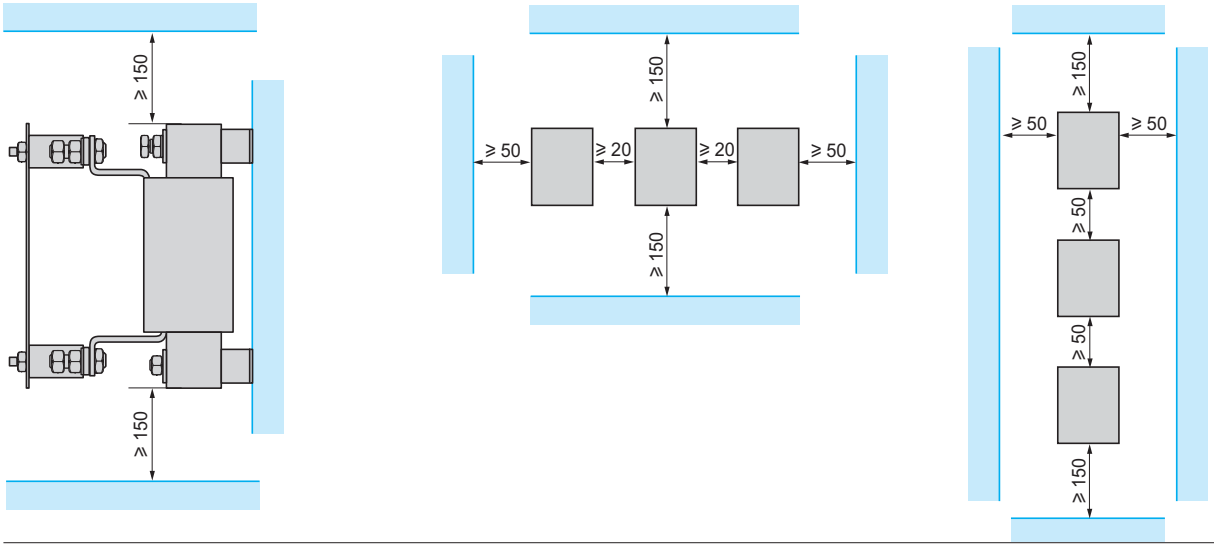

(1) It is absolutely essential that the motor chokes are mounted on a metal support (grille, frame, etc.)
(2) References VW3 A5 106…108 comprise 3 components.
(3) Because of the magnetic field and/or the heat dissipation, it is essential to follow the mounting recommendations provided.

IP 20 protection kits for chokes VW3 A5 104…108

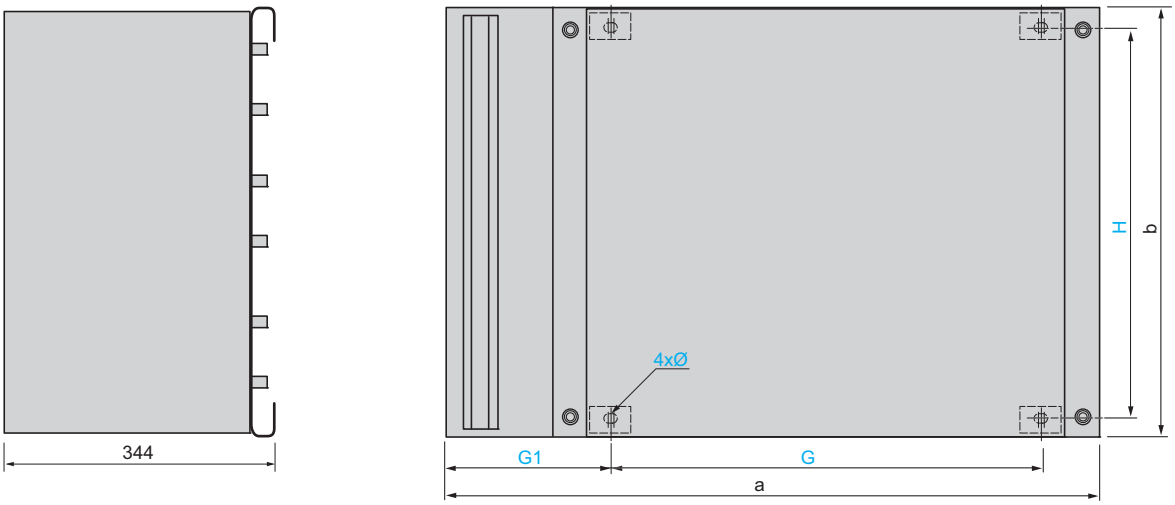

VW3	a	b	G	G1	H	Ø
A9 612	780	580	530	190	526	10 x 15
A9 613	1180	780	800	200	726	10 x 15

Presentation: pages 170 and 171
Characteristics: page 171
References: pages 172 and 173
Schemes: page 231
Functions: pages 268 to 299

Sinus filters (1)

VW3 A5 201...206

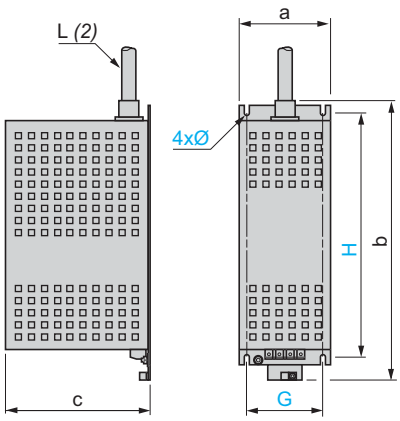

Mounting recommendations

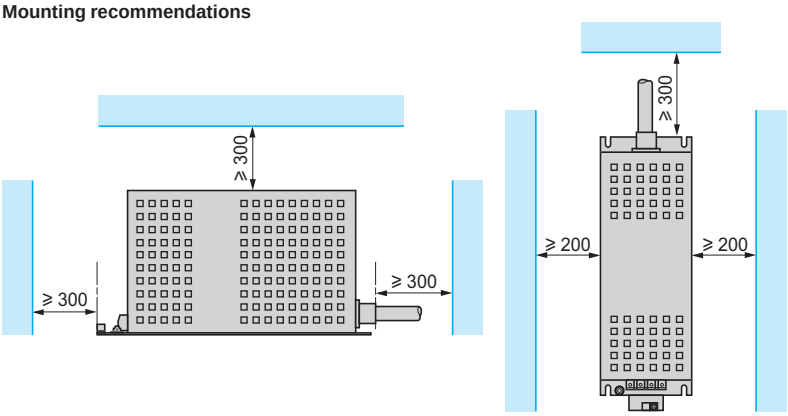

VW3	a	b	c	G	H	Ø	L (2)
A5 201	120	335	160	100	280	6.6	700
A5 202	120	405	190	100	350	6.6	900
A5 203	150	470	240	120	380	6.6	900
A5 204	210	650	280	160	530	8.6	1500
A5 205	250	780	360	200	650	11	1600
A5 206	310	1060	375	220	880	11	2700

VW3 A5 207

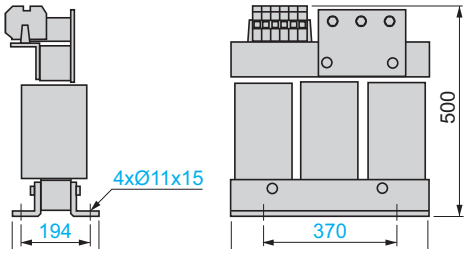

Mounting recommendations

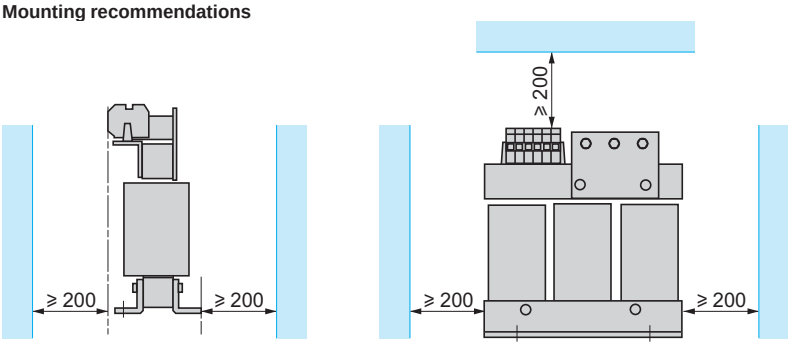

VW3 A5 208...211

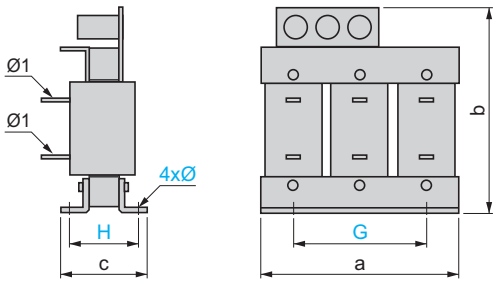

Mounting recommendations

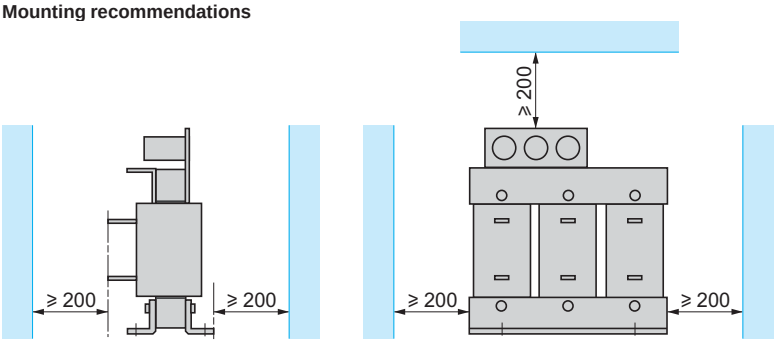

VW3	a	b	c	G	H	Ø	Ø1
A5 208	420	500	345	370	231	11 x 15	11
A5 209	480	600	340	430	238	13 x 18	11
A5 210	480	710	370	430	258	13 x 18	14
A5 211	620	930	500	525	352	13 x 22	4 x Ø11

(1) Sinus filters emit considerable heat and must not be placed underneath the drive.
(2) Length of the cable integrated in the sinus filter.

Variable speed drives
Altivar 71
Safety requirements

“Power Removal” safety function

The Altivar 71 drive integrates the “Power Removal” safety function which prohibits unintended equipment operation. The motor no longer produces torque.

This safety function:
■ Complies with the standard for safety of machinery EN 954-1, category 3
■ Complies with operational safety standard IEC/EN 61508, SIL2 capability (safety control-signalling applied to processes and systems)
The SIL (Safety Integrity Level) capability depends on the connection scheme for the drive and for the safety function. Failure to observe the setup recommendations could inhibit the SIL capability of the “Power Removal” safety function.
■ Complies with draft product standard IEC/EN 61800-5-2 for the two stop functions:
□ Safe Torque Off (“STO”): response time ≤ 100 ms
□ Safe Stop 1 (“SS1”)

The “Power Removal” safety function has a redundant electronic architecture *(1)* which is monitored continuously by a diagnostics function.

This level SIL2 and category 3 safety function is certified as conforming to these standards by the INERIS certification body under a program of voluntary certification.

Categories relating to safety according to EN 954-1

Category	Basic safety principle	Control system requirements	Behaviour in the event of a fault
B	Selection of components that comply with the relevant standards	Control in accordance with good engineering practice	Possible loss of the safety function
1	Selection of components and safety principles	Use of tried and tested components and proven safety principles	Possible loss of the safety function with a lower probability than in **B**
2	Selection of components and safety principles	Cyclic testing. The test intervals must be appropriate to both the machine and its application	Fault detected at each test
3	Structure of the safety circuits	A single fault must not result in loss of the safety function. This single fault must be detected, if reasonably practicable	Safety function ensured, except in the event of an accumulation of faults
4	Structure of the safety circuits	A single fault must not result in loss of the safety function. This fault must be detected when or before the safety function is next invoked. An accumulation of faults must not result in loss of the safety function.	Safety function always ensured

The machinery manufacturer is responsible for selecting the safety category. The category depends of the level of risk factors given in standard EN 954-1.

***Note**: The Altivar 71 drive can be used up to category 3*

Safety Integrity Levels (SIL) according to standard IEC/EN 61508

SIL1 according to standard IEC/EN 61508 is comparable with category 1 according to EN 954-1 (SIL1: mean probability of undetected hazardous failure per hour between 10^{-5} and 10^{-6}).
SIL2 according to standard IEC/EN 61508 is comparable with category 3 according to EN 954-1 (SIL2: mean probability of undetected hazardous failure per hour between 10^{-6} and 10^{-7}).

(1) Redundant: consists of mitigating the effects of failure of one component by means of the correct operation of another, assuming that faults do not occur simultaneously on both.

Variable speed drives
Altivar 71
Safety requirements

"Power Removal" safety function considerations

The "Power Removal" safety function cannot be considered as a means of electrical disconnection of the motor (no electrical isolation); if necessary, a Vario switch disconnector must be used.
The "Power Removal" safety function is not designed to overcome any malfunction in the drive process control or application functions.
The output signals available on the drive must not be considered as safety signals (e.g. "Power Removal" active); these are Preventa-type safety module outputs which must be integrated into a safety control-signalling circuit.

The schemes on the following pages take into account conformity to standard IEC/EN 60204-1 which defines three stopping categories:
■ Category 0: Stopping by immediate removal of the power from the actuators (e.g. uncontrolled stop)
■ Category 1: Controlled stop maintaining the power on the actuators until the machine stops, then removal of the power when the actuators stop when stop is achieved
■ Category 2: Controlled stop maintaining the power on the actuators

Connection schemes and applications

Conforming to category 1 of standard EN 954-1 and level SIL1 according to standard IEC/EN 61508

Use of the connection schemes on pages 222 and 223 which use a line contactor or a Vario switch disconnector between the drive and the motor.
In this case, the "Power Removal" safety function is not used and the motor stops in accordance with category 0 of standard IEC/EN 60204-1.

Conforming to category 3 of standard EN 954-1 and level SIL2 according to standard IEC/EN 61508

The connection schemes use the "Power Removal" safety function of the Altivar 71 drive combined with a Preventa safety module to monitor the emergency stop circuits.

Machines with short freewheel stopping times (low inertia or high resistive torque, see page 224).
When the activation command is given on the PWR input with the controlled motor, the motor power supply is immediately switched off and the motor stops according to category 0 of standard IEC/EN 60204-1.
Restarting is not permitted even when the activation command is given after the motor has come to a complete stop ("STO").
This safe stop is maintained while the PWR input remains activated.

This scheme must also be used for hoisting applications.
On a "Power Removal" command, the drive requires the brake to be engaged, but a Preventa safety module contact must be inserted in series in the brake control circuit to engage it safely when a request is made to activate the "Power Removal" safety function.

Machines with long freewheel stopping times (high inertia or low resistive torque, see page 225).
When the activation command is given, deceleration of the motor controlled by the drive is first requested, then, following a time delay controlled by a Preventa-type fault relay *(1)* which corresponds to the deceleration time, the "Power Removal" safety function is activated by the PWR input. The motor stops according to category 1 of standard IEC/EN 60204-1 ("SS1").

Periodic test
The "Power Removal" safety input must be activated at least once a year for preventive maintenance purposes. The drive must be switched off before preventive maintenance takes place, and then powered up again. If the power supply to the motor is not switched off during testing, safety integrity is no longer assured for the "Power Removal" safety function. The drive must therefore be replaced to ensure the operational safety of the machine or of the system process.

(1) Please refer to the "Safety solutions using Preventa" catalogue.

Applications in a potentially explosive atmosphere (ATEX)

Classification of zones

European directive 1999/92/EC (referred to as the ATEX 137 directive, or worker protection directive) classifies the ATEX zones and compatible product types. It is the user's responsibility to define the ATEX zone where the ATEX motor controlled by the Altivar 71 variable speed drive will be installed.

The Altivar 71 variable speed drive must always be installed outside the hazardous ATEX zone. The various installation schemes proposed in the ATEX guide *(1)* are compatible with operation of the ATEX motor in zone 1, 21, 2 or 22. The table below summarizes the characteristics relating to each ATEX zone.

Atmosphere	Zone	Definition	Time and presence of explosive atmosphere
			Hours/year
Gas	0	The potentially explosive atmosphere is present permanently, or over long periods, or frequently owing to malfunctions	> 1000 hr
Dust	20		
Gas	1	The potentially explosive atmosphere can be present owing to probable malfunctions	10…1000 hr
Dust	21		
Gas	2	The presence of a potentially explosive atmosphere is unlikely, and if it occurs it is for a short duration and not during normal operation	< 10 hr
Dust	22		

***Note**: Installation of electrical equipment and motors is prohibited in ATEX zone 0 or 20.*

General considerations

European directive 94/9/EC (also referred to as directive ATEX 95, or product directive) defines the constraints applicable to ATEX products and the associated certification requirements.
The OEM, the installer and the user are responsible for the selection and operation of the components they use to provide ATEX protection of the systems they design or operate:
■ The motor must be ATEX certified and compatible with use in zone 1, 21, 2 or 22
■ The motor must be equipped with ATEX certified thermal sensor switch(es), or ATEX certified thermal sensor(s), associated with a control unit, itself ATEX certified.
Caution: In general the control units are designed to operate outside the hazardous ATEX zone. It is then possible to place these control units close to the variable speed drive, in the protected zone.

Thermal protection of the ATEX motor

Use of the “Power Removal” safety function enables the variable speed drive to provide thermal protection in the event of excessive temperature rise of the ATEX motor, but it does not enable it to safely control and regulate the temperature of the ATEX motor.
All motor types ATEX certified for use in zone 1, 21, 2 or 22, which are equipped with ATEX thermal sensors, can be protected by the Altivar 71 variable speed drive.

The switching device, integrated with the thermal sensor or integrated with the thermal protection control unit of the ATEX motor, must be connected to the PWR safety input of the Altivar 71 variable speed drive. When the excessive temperature of the ATEX motor is reached, the control device automatically triggers the “Power Removal” safety function. The electrical power supply of the motor is then switched off in order to ensure a temperature of the motor casing lower than the temperature that is dangerous for the gas or dust mixture in which the ATEX motor is installed.
When the ATEX application requires the use of the “Power Removal” safety function, the safety module (of Preventa type) *(2)* must be used. The schemes proposed in the ATEX guide *(1)* show how the switching devices, integrated with the thermal sensor or with the thermal protection control unit, are connected to the safety module. The output of the safety module must be connected to the PWR safety input of the Altivar 71 variable speed drive.

(1) Please consult the ATEX guide, available on our website “www.telemecanique.com”
(2) Please refer to the “Safety solutions using Preventa” catalogue.

Variable speed drives
Altivar 71
Safety requirements

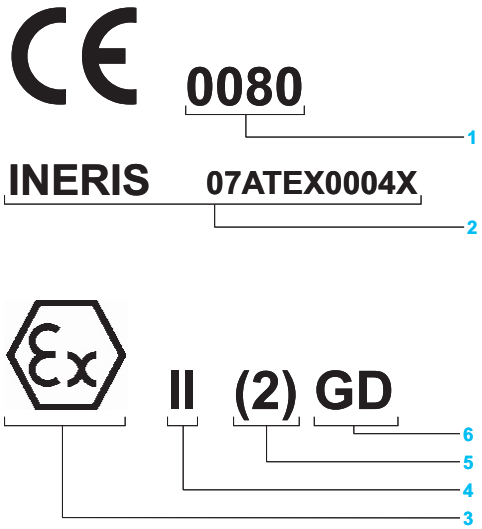

ATEX marking identification

ATEX certified Altivar 71 variable speed drives can be identified by the marking corresponding to all the applications covered by the drive's ATEX certification.

1 **0080** corresponds to the identification number of the INERIS notified body that issued the notifications for the quality assurance systems for the drive production units in compliance with EN 50980.

2 **INERIS 07ATEX0004X** corresponds to the identification of the certification report issued by the INERIS notified body for conformity of the variable speed drive with the requirements of ATEX directive 94/9/EC.

3 The logo corresponds to the identification of an ATEX product

4 **II** allows the equipment to be used in ATEX surface applications (use prohibited for mining applications).

5 **(2)** The brackets "**( )**" identify the Altivar 71 variable speed drive as being equipment associated with the control and signalling of an ATEX motor installed in a hazardous zone. The figure **2** corresponds to identification of the ATEX motor as category 2 equipment, for use in ATEX zone 1 or 21.
Note: *Category 3 motors for use in ATEX zone 2 or 22 are also covered by this marking.*

6 **G** for Gas, corresponds to ATEX applications for explosive gas atmospheres.
D for Dust, corresponds to ATEX applications for atmospheres containing an explosive dust mixture.

General

Operation of the equipment and the cable connection method must comply with the local regulations in the installation location. The rules given by ATEX installation standards, when applicable, should also be observed:
- IEC 60079-14 for applications in an explosive gas atmosphere
- IEC 61241-14 for applications in a combustible dust atmosphere

In zone 1 or 2, for applications in an explosive gas atmosphere, the requirements of IEC 60079-14 apply to the installation:
- **IEC 60079-14**: Electrical apparatus for explosive gas atmospheres
- **Part 14**: Electrical installations in hazardous areas (other than mines).

In zone 21 or 22, for applications in a combustible dust atmosphere, the requirements of IEC 61241-14 apply to the installation:
- **IEC 61241-14**: Electrical apparatus for use in the presence of combustible dust
- **Part 14**: Selection and installation.

The schemes proposed in the ATEX guide *(1)* for the use of Altivar 71 variable speed drives in ATEX applications take account of the nature of the thermal sensors mounted in the ATEX motor.

Note: Motor stopping categories according to standard IEC/EN 60204-1
The installation schemes proposed in the ATEX guide *(1)* show the use of the Preventa XPS-AC safety module *(2)* in combination with an ATEX application for implementing the safety function in stopping category 0 according to standard IEC/EN 60204-1.
The user should make sure that use of the delayed activation fault relay (Preventa XPS-ATE module) *(2)* is compatible in combination with its ATEX application, for stopping category 1 according to standard IEC/EN 60204-1.

Periodic ATEX test

For preventive maintenance, the complete safety loop (starting from the thermal sensors of the ATEX motor up to the "Power Removal" safety function incorporated in the drive) must be tested at least once a year, in order to verify that, in the event of excessive temperature rise, the electrical power supply of the ATEX motor is always cut off automatically.

(1) Please consult the ATEX guide, available on our website "www.telemecanique.com"
(2) Please refer to the "Safety solutions using Preventa" catalogue.

Schemes conforming to standards EN 954-1 category 1, IEC/EN 61508 capacity SIL1, in stopping category 0 according to IEC/EN 60204-1

ATV 71H●●●M3, ATV 71H●●●M3X, ATV 71●●●●N4, ATV 71H●●●Y, ATV 71P●●●N4Z

Three-phase power supply with upstream breaking via contactor

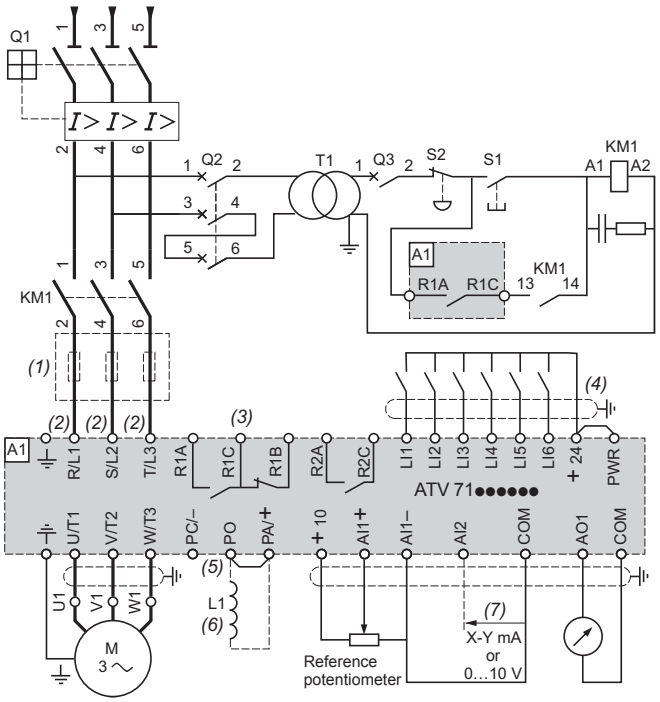

ATV 71H075M3…HU75M3

Power section for single-phase power supply

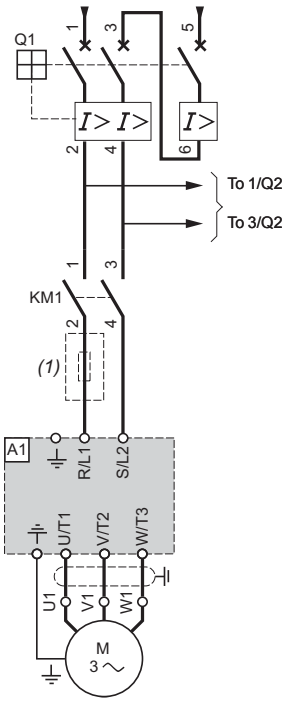

Note: *All terminals are located at the bottom of the drive. Fit interference suppressors on all inductive circuits near the drive or connected on the same circuit, such as relays, contactors, solenoid valves, fluorescent lighting, etc.*

Components for use with the Altivar (for a complete list of references, see our catalogue "Motor starter solutions. Control and protection components").

Item	Description
A1	ATV 71 drive, see pages 22 to 25
KM1	Contactor, see motor starters pages 242 to 249
L1	DC choke, see page 155
Q1	Circuit-breaker, see motor starters pages 242 to 249
Q2	GV2 L rated at twice the nominal primary current of T1
Q3	GB2 CB05
S1, S2	XB4 B or XB5A pushbuttons
T1	100 VA transformer 220 V secondary

(1) Line choke (single phase or three-phase); mandatory for ATV 71HU40M3…HU75M3 drives with a 200…240 V 50/60 Hz single-phase power supply and ATV 71HC11Y…HC63Y (except when a special transformer is used (12-pulse)). See page 160.
(2) For ATV 71HC40N4 drives combined with a 400 kW motor, ATV 71HC50N4 and ATV 71HC40Y…HC63Y, see page 226.
(3) Fault relay contacts. Used for remote signalling of the drive status.
(4) Connection of the common for the logic inputs depends on the positioning of the SW1 switch: see schemes on page 227.
(5) There is no PO terminal on ATV 71HC11Y…HC63Y drives.
(6) Optional DC choke for ATV 71H●●●M3, ATV 71HD11M3X…HD45M3X, ATV 71●075N4…●D75N4 and ATV 71P●●●N4Z. Connected in place of the strap between the PO and PA/+ terminals. For ATV 71HD55M3X, HD75M3X, ATV 71HD90N4…HC50N4 drives, the choke is supplied with the drive; the customer is responsible for connecting it.
(7) Software-configurable current (0…20 mA) or voltage (0…10 V) analog input.

Schemes conforming to standards EN 954-1 category 1, IEC/EN 61508 capacity SIL1, in stopping category 0 according to IEC/EN 60204-1 (continued)

ATV 71H●●●M3, ATV 71H●●●M3X, ATV 71●●●●N4, ATV 71H●●●Y, ATV 71P●●●N4Z

Three-phase power supply with downstream breaking via switch disconnector

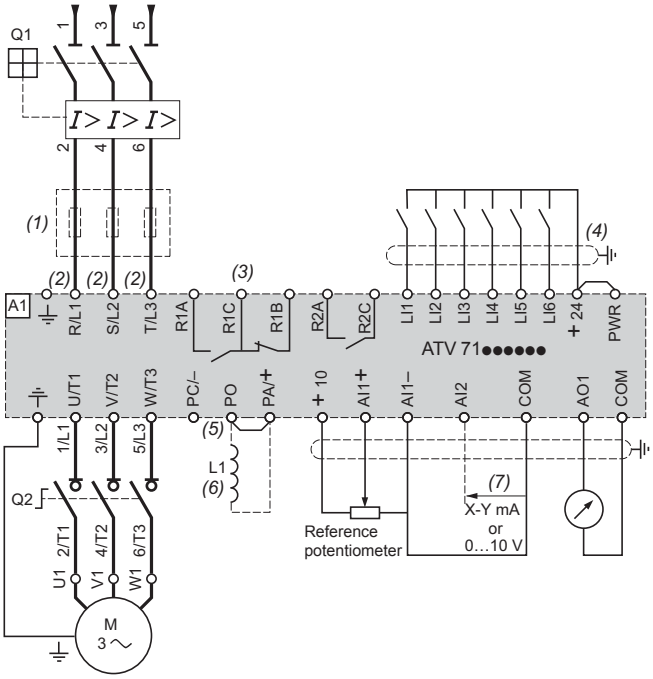

ATV 71H075M3…HU75M3

Power section for single-phase power supply

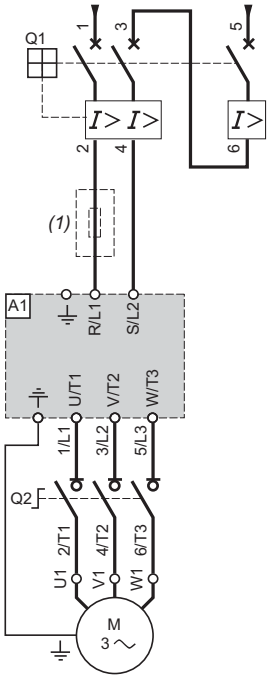

Note: *All terminals are located at the bottom of the drive. Fit interference suppressors on all inductive circuits near the drive or connected on the same circuit, such as relays, contactors, solenoid valves, fluorescent lighting, etc.*

Components for use with the Altivar (for a complete list of references, see our catalogue "Motor starter solutions. Control and protection components").

Item	Description
A1	ATV 71 drive, see pages 22 to 25
L1	DC choke, see page 155
Q1	Circuit-breaker, see motor starters pages 242 to 249
Q2	Switch disconnector (Vario)

(1) Line choke (single phase or three-phase), mandatory for ATV 71HU40M3…HU75M3 drives with a 200…240 V 50/60 Hz single-phase power supply and ATV 71HC11Y…HC63Y (except when a special transformer is used (12-pulse)). See page 160.
(2) For ATV 71HC40N4 drives combined with a 400 kW motor, ATV 71HC50N4 and ATV 71HC40Y…HC63Y, see page 226.
(3) Fault relay contacts. Used for remote signalling of the drive status.
(4) Connection of the common for the logic inputs depends on the positioning of the SW1 switch: see schemes on page 227.
(5) There is no PO terminal on ATV 71HC11Y…HC63Y drives.
(6) Optional DC choke for ATV 71H●●●M3, ATV 71HD11M3X…HD45M3X, ATV 71●075N4…●D75N4 and ATV 71P●●●N4Z. Connected in place of the strap between the PO and PA/+ terminals. For ATV 71HD55M3X, HD75M3X, ATV 71HD90N4…HC50N4 drives, the choke is supplied with the drive; the customer is responsible for connecting it.
(7) Software-configurable current (0…20 mA) or voltage (0…10 V) analog input.

Schemes conforming to standards EN 954-1 category 3, IEC/EN 61508 capacity SIL2, in stopping category 0 according to IEC/EN 60204-1

ATV 71H●●●M3, ATV 71H●●●M3X, ATV 71●●●●N4, ATV 71H●●●Y, ATV 71P●●●N4Z

Three-phase power supply, low inertia machine, vertical movement

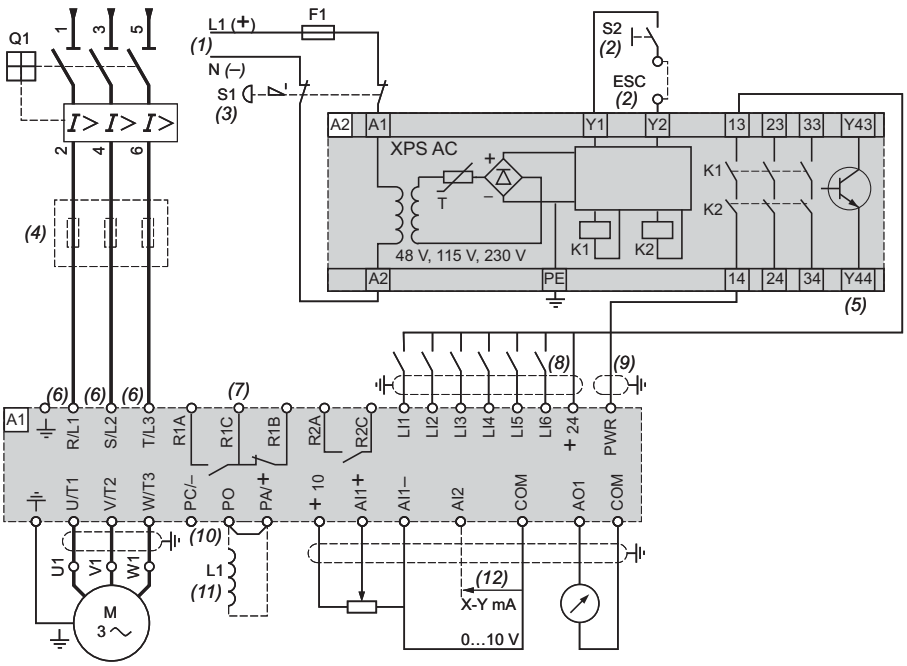

ATV 71H075M3…HU75M3

Power section for single-phase power supply

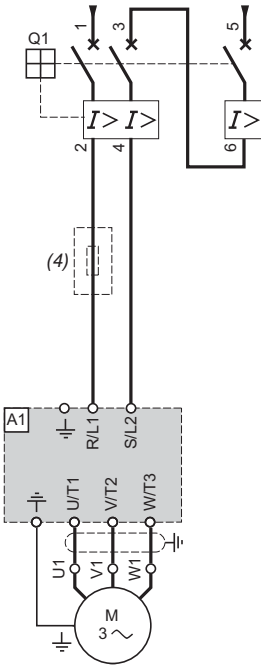

Note: *All terminals are located at the bottom of the drive. Fit interference suppressors on all inductive circuits near the drive or connected on the same circuit, such as relays, contactors, solenoid valves, fluorescent lighting, etc.*

Components for use with the Altivar (for a complete list of references, see our catalogues "Motor starter solutions. Control and protection components" and "Safety solutions using Preventa").

Item	Description
A1	ATV 71 drive, see pages 22 to 25
A2	Preventa XPS AC safety module for monitoring emergency stops and switches. One safety module can manage the "Power Removal" function for several drives on the same machine. In this case, each drive must connect its PWR terminal to its + 24 V via the safety contacts on the XPS AC module. These contacts are independent for each drive.
F1	Fuse W
L1	DC choke, see page 155
Q1	Circuit-breaker, see motor starters pages 242 to 249
S1	Emergency stop button with 2 contacts
S2	XB4 B or XB5 A pushbutton

(1) Power supply: 24 V ⎓ or ∿, 48 V ∿, 115 V ∿, 230 V ∿.
(2) S2: resets XPS AC module on power-up or after an emergency stop. ESC can be used to set external starting conditions.
(3) Requests freewheel stopping of the movement and activates the "Power Removal" safety function.
(4) Line choke (single phase or three-phase), mandatory for ATV 71HU40M3…HU75M3 drives with a 200…240 V 50/60 Hz single-phase power supply and ATV 71HC11Y…HC63Y (except when a special transformer is used (12-pulse)). See page 160.
(5) The logic output can be used to signal that the machine is in a safe stop state.
(6) For ATV 71HC40N4 drives combined with a 400 kW motor, ATV 71HC50N4 and ATV 71HC40Y…HC63Y, see page 226.
(7) Fault relay contacts. Used for remote signalling of the drive status.
(8) Connection of the common for the logic inputs depends on the positioning of the SW1 switch: see schemes on page 227.
(9) Standardized coaxial cable, type RG174/U according to MIL-C17 or KX3B according to NF C 93-550, external diameter 2.54 mm, maximum length 15 m. The cable shielding must be earthed.
(10) There is no PO terminal on ATV 71HC11Y…HC63Y drives.
(11) Optional DC choke for ATV 71H●●●M3, ATV 71HD11M3X…HD45M3X, ATV 71●075N4…●D75N4 and ATV 71P●●●N4Z. Connected in place of the strap between the PO and PA/+ terminals. For ATV 71HD55M3X, HD75M3X, ATV 71HD90N4…HC50N4 drives, the choke is supplied with the drive; the customer is responsible for connecting it.
(12) Software-configurable current (0…20 mA) or voltage (0…10 V) analog input.

Schemes conforming to standards EN 954-1 category 3, IEC/EN 61508 capacity SIL2, in stopping category 1 according to IEC/EN 60204-1

ATV 71H●●●M3, ATV 71H●●●M3X, ATV 71H●●●N4, ATV 71H●●●Y, ATV 71P●●●N4Z

Three-phase power supply, high inertia machine

ATV 71H075M3…HU75M3

Power section for single-phase power supply

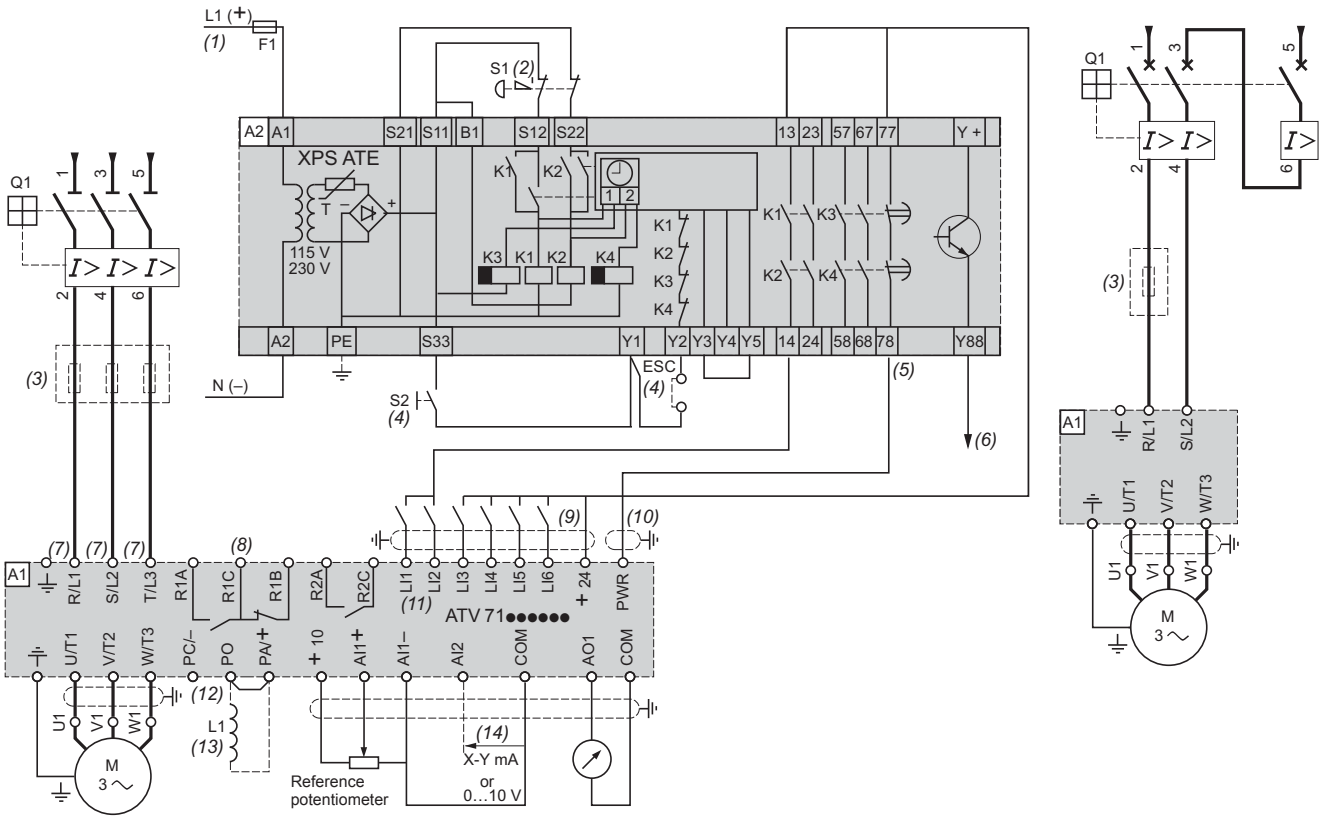

Note: *All terminals are located at the bottom of the drive. Fit interference suppressors on all inductive circuits near the drive or connected on the same circuit, such as relays, contactors, solenoid valves, fluorescent lighting, etc.*

Components for use with the Altivar (for a complete list of references, see our catalogues "Motor starter solutions. Control and protection components" and "Safety solutions using Preventa").

Item	Description
A1	ATV 71 drive, see pages 22 to 25
A2 *(5)*	Preventa XPS ATE safety module for monitoring emergency stops and switches. One safety module can manage the "Power Removal" safety function for several drives on the same machine. In this case the time delay must be adjusted on the drive controlling the motor that requires the longest stopping time. In addition, each drive must connect its PWR terminal to its + 24 V via the safety contacts on the XPS ATE module. These contacts are independent for each drive.
F1	Fuse
L1	DC choke, see page 155
Q1	Circuit-breaker, see motor starters pages 242 to 249
S1	Emergency stop button with 2 N/C contacts
S2	Run button

(1) Power supply: 24 V ⎓ or ∿, 115 V ∿, 230 V ∿.
(2) Requests controlled stopping of the movement and activates the "Power Removal" safety function.
(3) Line choke (single phase or three-phase), mandatory for ATV 71HU40M3…HU75M3 drives with a 200…240 V 50/60 Hz single-phase power supply and ATV 71HC11Y…HC63Y (except when a special transformer is used (12-pulse)). See page 160.
(4) S2: resets XPS ATE module on power-up or after an emergency stop. ESC can be used to set external starting conditions.
(5) For stopping times requiring more than 30 seconds in category 1, use a Preventa XPS AV safety module which can provide a maximum time delay of 300 seconds.
(6) The logic output can be used to signal that the machine is in a safe state.
(7) For ATV 71HC40N4 drives combined with a 400 kW motor, ATV 71HC50N4 and ATV 71HC40Y…HC63Y, see page 226.
(8) Fault relay contacts. Used for remote signalling of the drive status.
(9) Connection of the common for the logic inputs depends on the positioning of the SW1 switch: see schemes on page 227.
(10) Standardized coaxial cable, type RG174/U according to MIL-C17 or KX3B according to NF C 93-550, external diameter 2.54 mm, maximum length 15 m. The cable shielding must be earthed.
(11) Logic inputs LI1 and LI2 must be assigned to the direction of rotation: LI1 in the forward direction and LI2 in the reverse direction.
(12) There is no PO terminal on ATV 71HC11Y…HC63Y drives.
(13) Optional DC choke for ATV 71H●●●M3, ATV 71HD11M3X…HD45M3X, ATV 71●075N4…●D75N4 and ATV 71P●●●N4Z. Connected in place of the strap between the PO and PA/+ terminals. For ATV 71HD55M3X, HD75M3X, ATV 71HD90N4…HC50N4 drives, the choke is supplied with the drive; the customer is responsible for connecting it.
(14) Software-configurable current (0…20 mA) or voltage (0…10 V) analog input.

Power terminal connections for ATV 71HC40N4 combined with a 400 kW motor, ATV 71HC50N4, ATV 71HC40Y… HC63Y

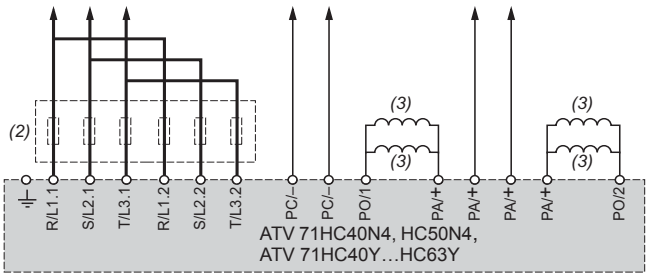

(1) For control section connections, see pages 222 to 225
(2) Line chokes, see page 160 ; these are mandatory for ATV 71HC40Y…HC63Y, to be ordered separately.
(3) DC chokes supplied as standard with ATV 71HC40N4, HC50N4 drives. Not available for ATV 71HC40Y…HC63Y.

VW3 A7 7●● braking resistors or VW3 A7 8●● hoist resistors, VW3 A7 1●● braking units

ATV 71H●●●M3, ATV 71HD11M3X…HD45M3X, ATV 71H075N4…HD75N4, ATV 71HU22Y…HD90Y, ATV 71W●●●N4, ATV 71P●●●N4Z

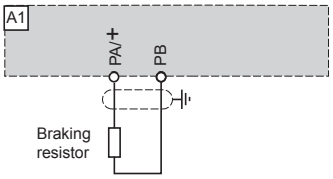

ATV 71HD55M3X, HD75M3X, ATV 71HD90N4…HC16N4, ATV 71HC11Y…HC16Y

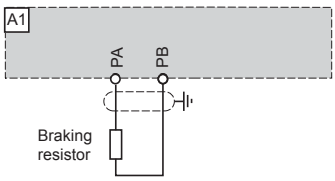

ATV 71HC20N4…HC50N4, ATV 71HC20Y…HC63Y

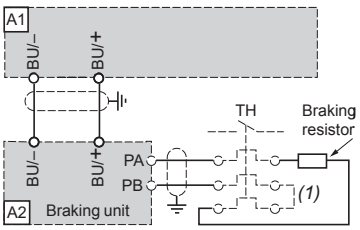

Components for use with the Altivar	
Item	**Description**
A1	ATV 71 drive, see pages 22 to 25
A2	Braking unit, if using a braking resistor or a hoist resistor, for ATV 71HC20N4…HC50N4, and ATV 71HC20Y…HC63Y. See pages 134 and 135
Braking resistor	See pages 136 and 138

(1) A thermal overload relay can be added; its contact must then be integrated into the control circuit.

Examples of recommended schemes

Logic inputs

The SW1 switch is used to adapt operation of the logic inputs (LI) to the PLC output technology:
- Set the switch to Source (factory setting) if using PLC outputs with PNP transistors
- Set the switch to Sink Int. or Sink Ext. if using PLC outputs with NPN transistors

Internal power supply

Switch in "Source" position

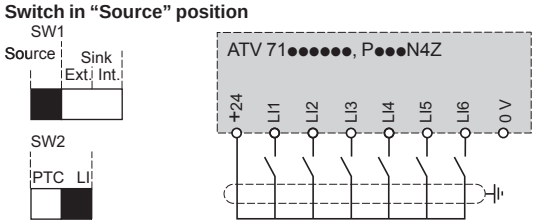

Switch in "Sink Int" position

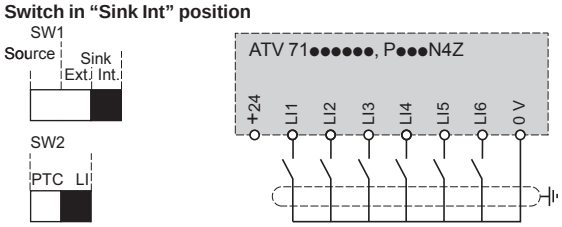

External power supply

Switch in "Source" position

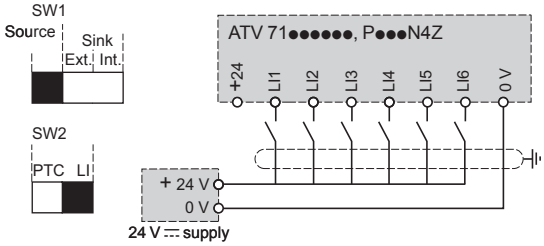

Switch in "Sink Ext" position

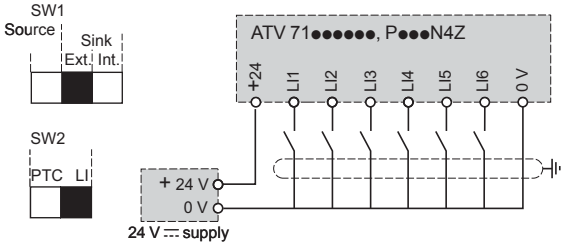

Input for PTC probes

The SW2 switch is used to operate the LI6 input:
- As a logic input by setting the SW2 switch to LI (factory setting)
- Or for protecting the motor via PTC probes by setting the SW2 switch to PTC

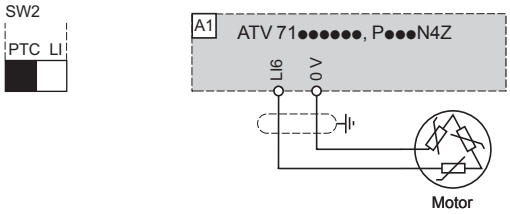

2-wire control and jog operation (JOG)

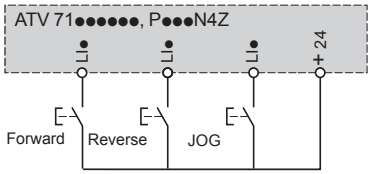

3-wire control and jog operation (JOG)

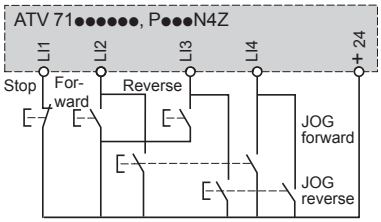

Examples of recommended schemes (continued)

Unipolar speed reference

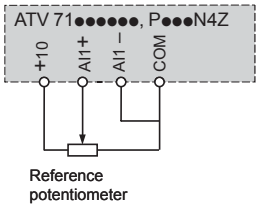

Bipolar speed reference

Requires a VW3 A3 201 or VW3 A3 202 I/O extension card

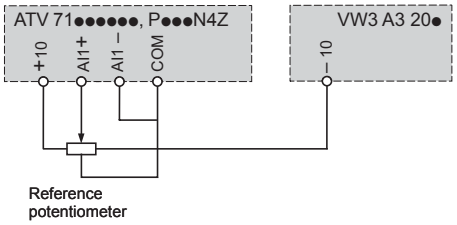

Speed reference using axis control

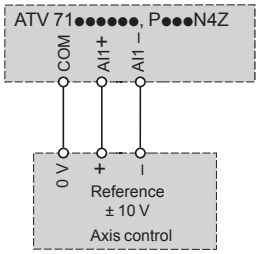

Separate control power supply

The separate control card can be powered by an external 24 V ⎓ supply

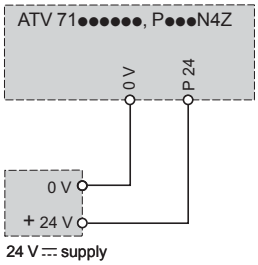

Analog input configured for voltage

External 0…10 V

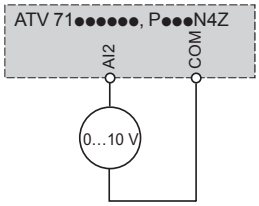

External + 10 V

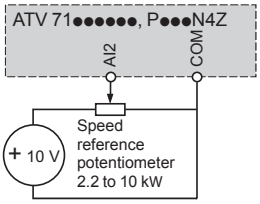

Analog input configured for current

0-20 mA, 4-20 mA, X-Y mA

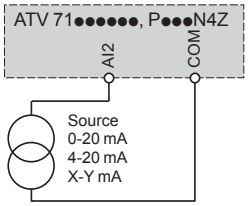

VW3 A3 201 and VW3 A3 202 I/O extension cards

Logic I/O

The SW3 or SW4 switch is used to adapt operation of the logic inputs (LI) to the PLC output technology:
- Set the switch to Source (factory setting) if using PLC outputs with PNP transistors
- Set the switch to Sink Int. or Sink Ext. if using PLC outputs with NPN transistors

Internal power supply

Switch in "Source" position

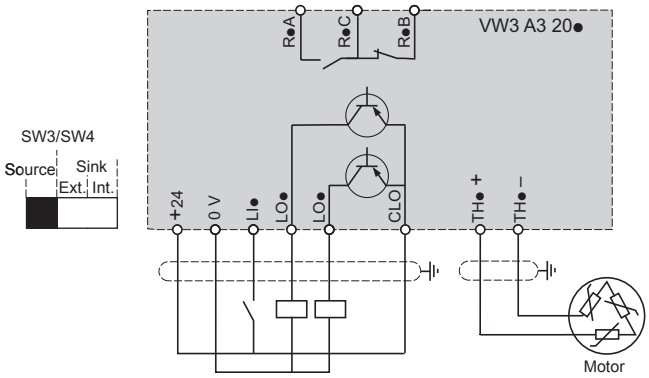

Switch in "Sink Int" position

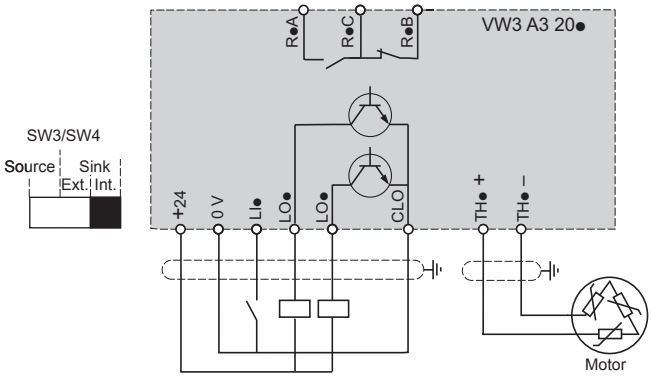

External power supply

Switch in "Source" position

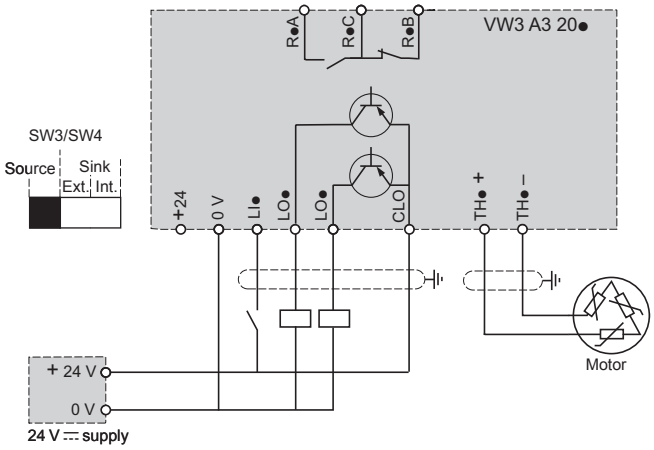

Switch in "Sink Ext" position

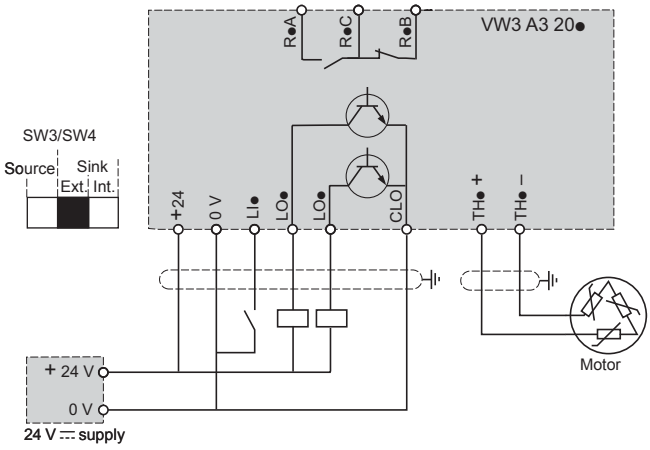

Analog I/O (only on VW3 A3 202 extended I/O card)

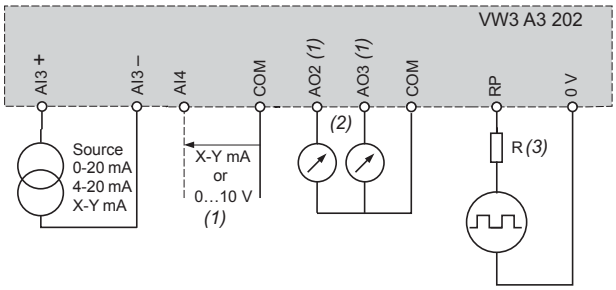

(1) Software-configurable current (0-20 mA) or voltage (0…10 V) analog input.
(2) Software-configurable current (0-20 mA) or voltage (± 10 V or 0…10 V) analog outputs, independent selection possible for each output via switch.
(3) R: add a resistor if the input voltage of the pulse train is greater than 5 V.
Recommended values:

Input voltage V	Resistance Ω
12	510
15	910
24	1300

VW3 A3 401 to VW3 A3 411 encoder interface cards

Closed loop control

Wiring of encoders VW3 A3 401…407
A, $\overline{A}$, B, $\overline{B}$ signals

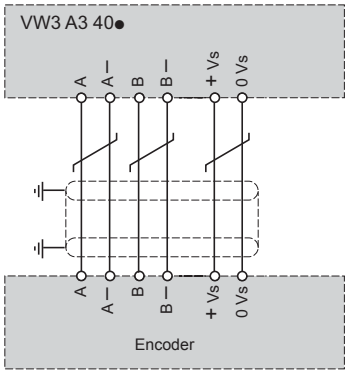

Wiring of encoders VW3 A3 403…407
AB signals

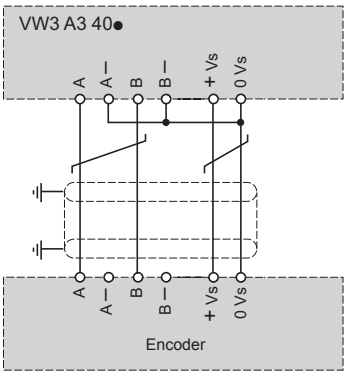

Wiring of encoders VW3 A3 403…407
A signal

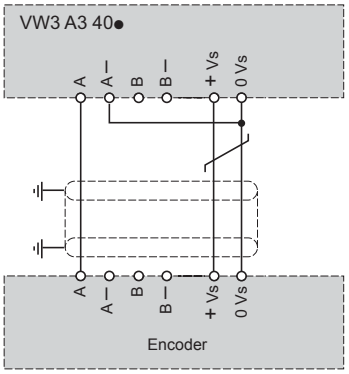

Wiring of encoder VW3 A3 408
Resolver signals

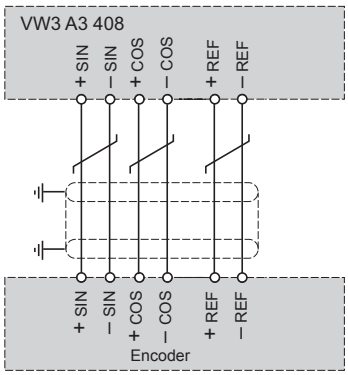

Wiring of encoder VW3 A3 409
EnDat or SSI signals

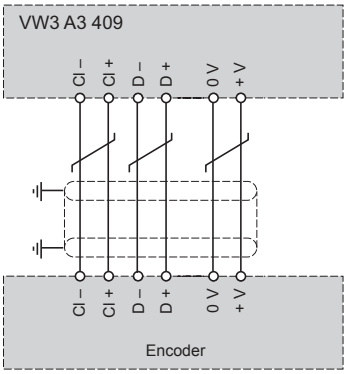

Wiring of encoder VW3 A3 411
$\overline{A}$A/$\overline{A}$A$\overline{B}$B/ $\overline{A}$A$\overline{B}$B$\overline{Z}$Z signals A

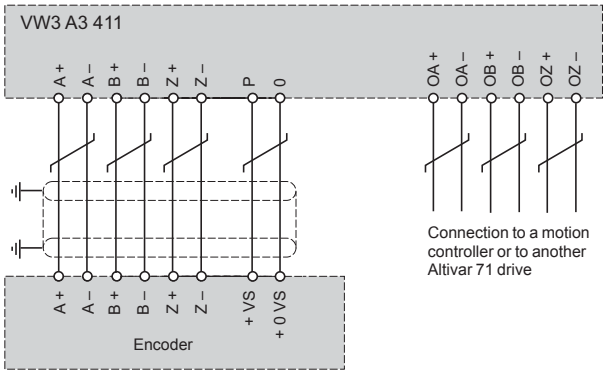

VW3 A3 501 "Controller Inside" programmable card

Card powered by the drive (1)

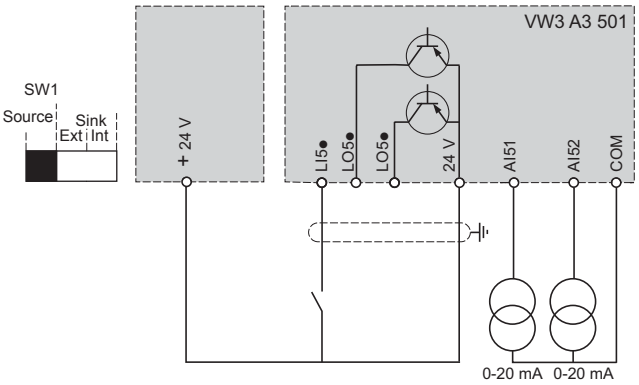

(1) Only if the power consumption is less than 200 mA; otherwise use an external power supply.

Card powered by external power supply

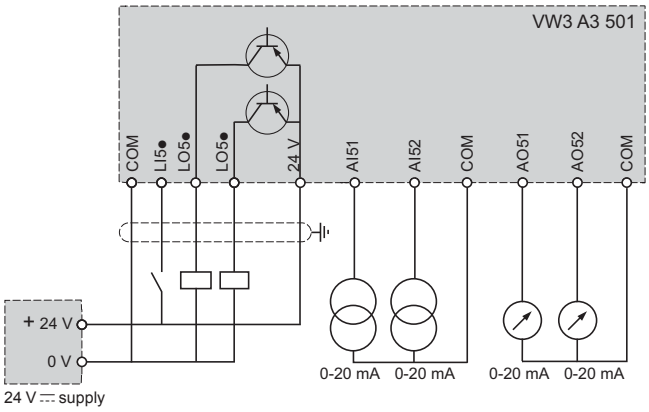

VW3 A4 4●● additional EMC input filters

Three-phase power supply, three-phase filter

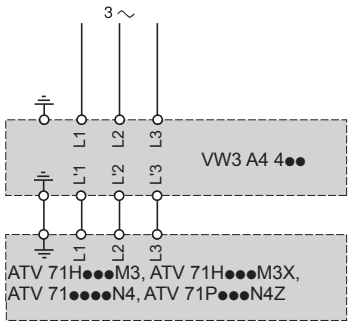

Single-phase power supply, three-phase filter

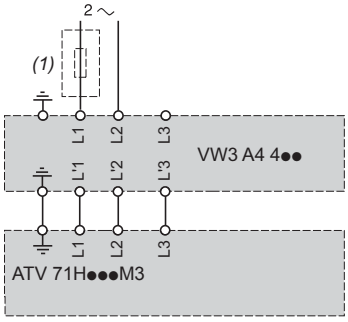

(1) Line choke mandatory for ATV 71HU40M3…HU75M3, see page 160

Output filters

VW3 A5 1●● motor chokes

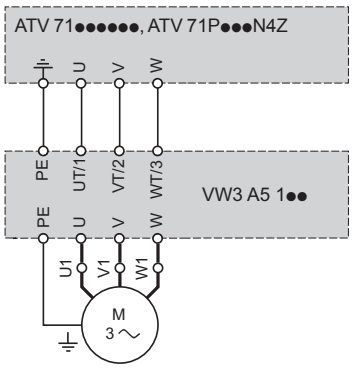

VW3 A5 2●● sinus filters

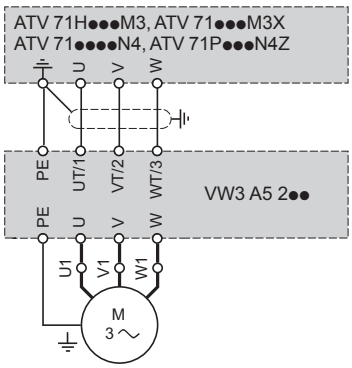

VW3 A4 6●● passive filters

Scheme with 1 passive filter for ATV 71H075N4…HD90N4 and ATV 71P●●●N4Z drives

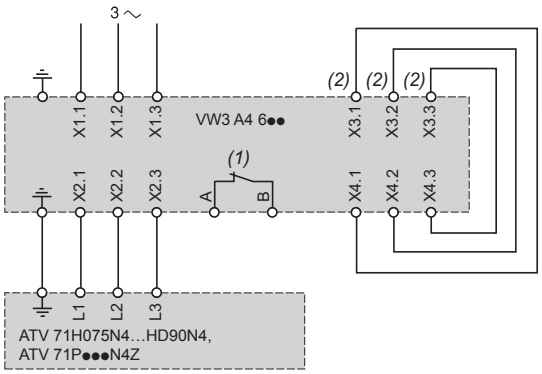

Scheme with 1 passive filter for ATV 71HC11N4…HC50N4 drives

Connection downstream of the line contactor

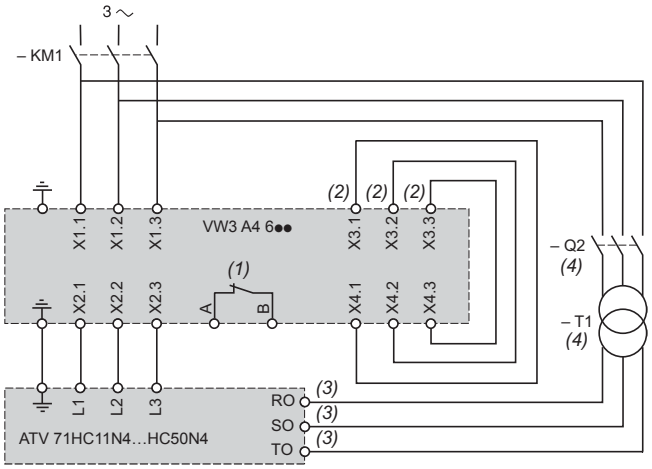

Connection upstream of the line contactor

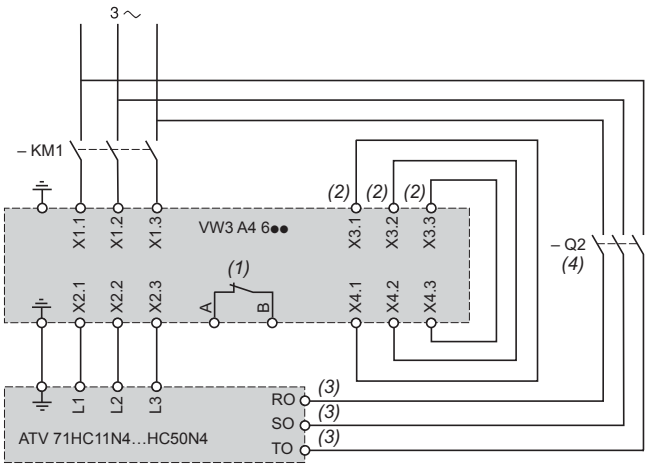

Scheme with 2 passive filters for ATV 71H075N4…HD90N4 drives

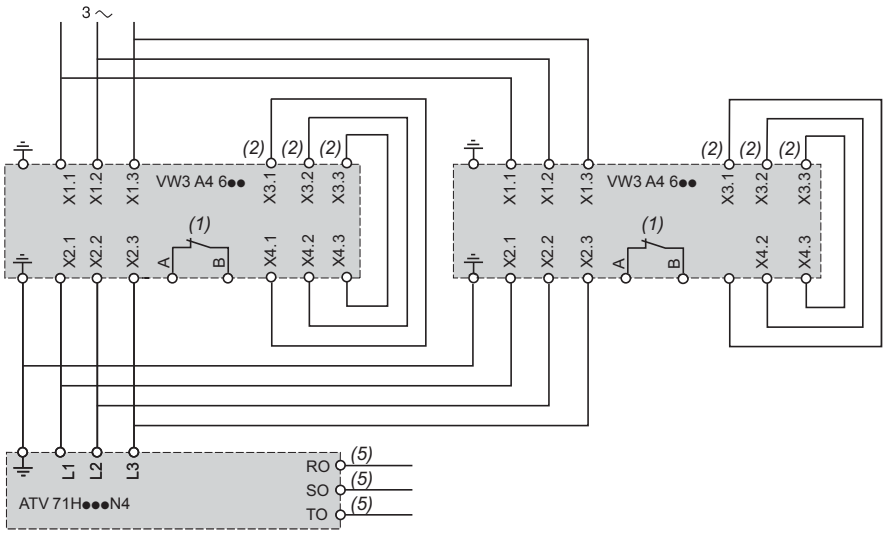

(1) Contact for indicating the thermal state of the passive filter, to be connected in the safety circuit of the installation.
(2) Delivered wired.
(3) Fan external power supply.
(4) Q2: GV2 RT10 thermal magnetic motor circuit-breaker. T1: 400/400 V or 460/460 V transformer.
(5) For ATV 71HC11N4…HC50N4 drives, the external power supply for the fan is mandatory, see scheme above with one passive filter.

VW3 A4 6●● passive filters (continued)

Scheme with 3 passive filters for ATV 71H075N4…HD90N4 drives

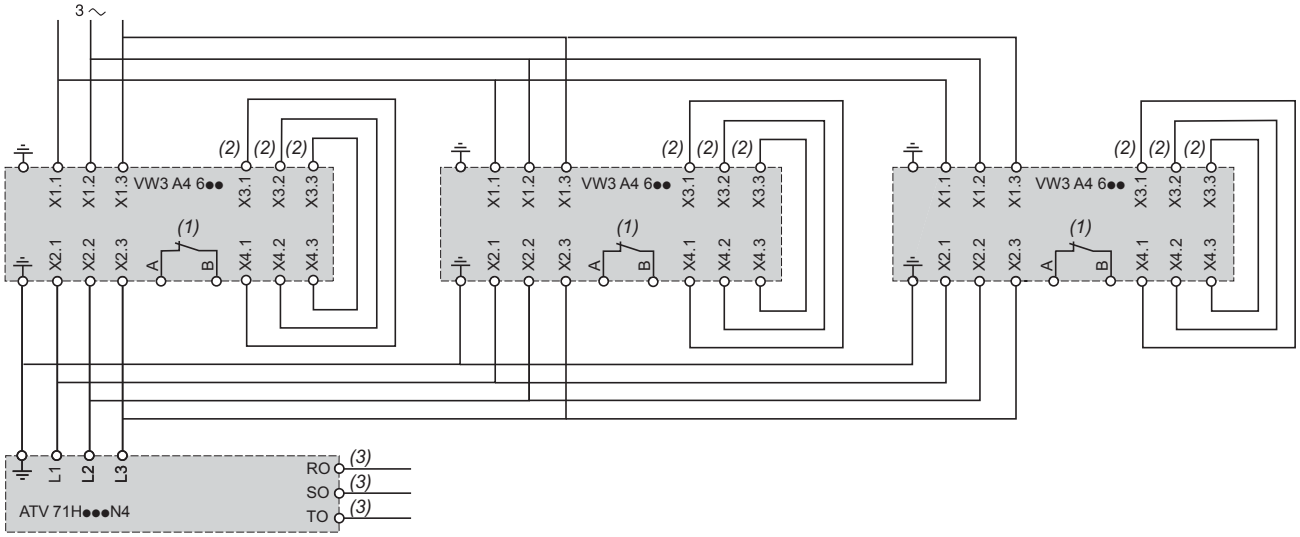

Scheme for controlling the filter via the drive according to the load

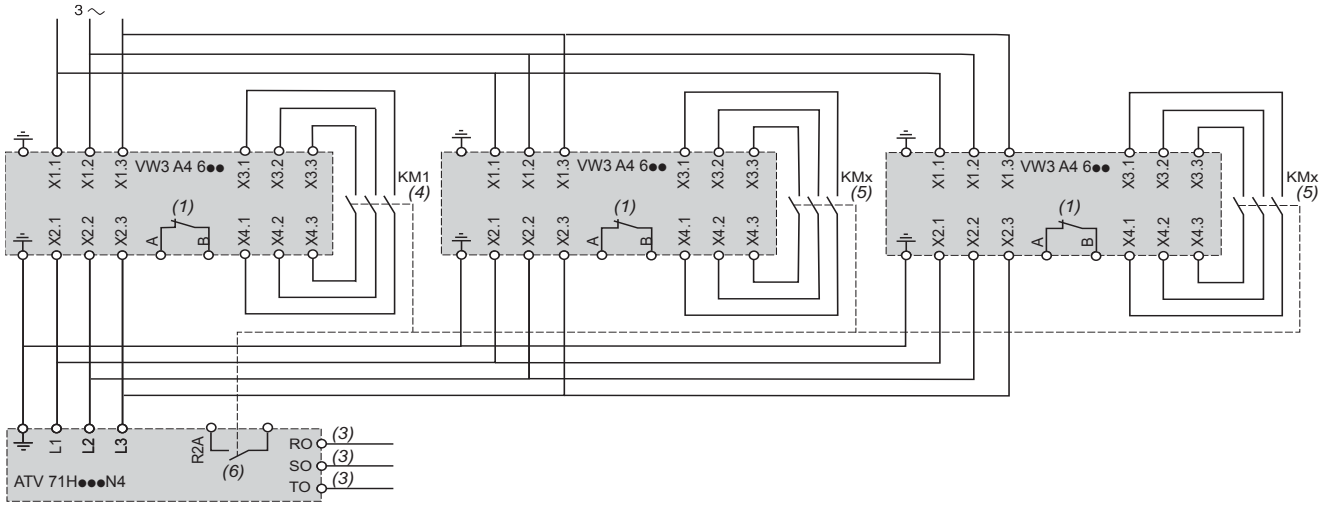

(1) Contact for indicating the thermal state of the passive filter, to be connected in the safety circuit of the installation.
(2) Delivered wired.
(3) For ATV 71HC11N4…HC50N4 drives, the external power supply for the fan is mandatory, see scheme on opposite page with one passive filter.
(4) KM1: category AC1 contactor sized at 50% of the drive nominal current (In).
(5) KMx: contactor type and sizing identical to KM1. It may be necessary to provide an intermediate relay to control the KMx contactors.
(6) The logic output at relay R2A must be assigned to the "Current threshold reached" (CtA) parameter.

Network braking unit

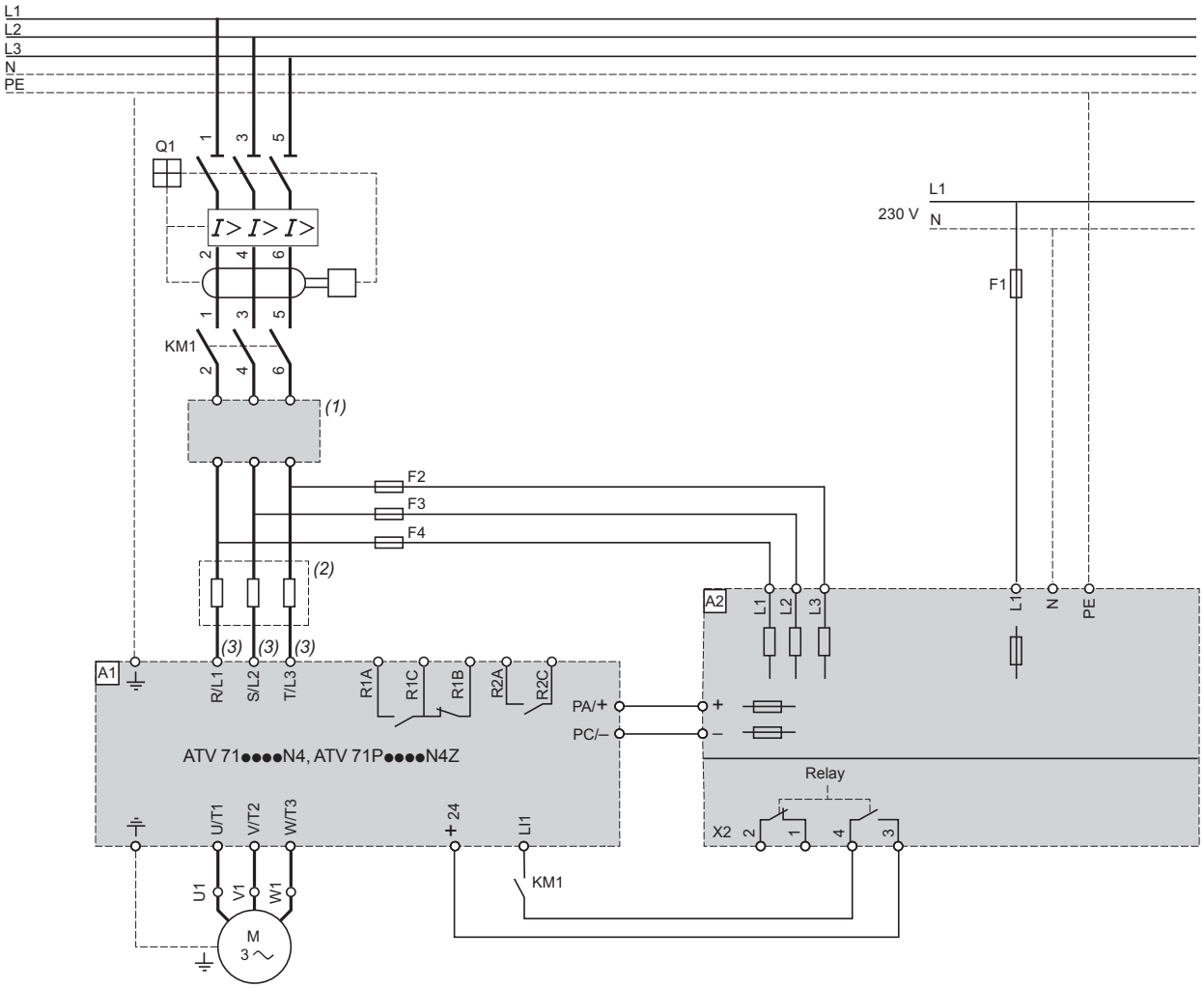

Components for use with the Altivar (for a complete list of references, see our catalogue "Motor starter solutions. Control and protection components").	
Item	**Description**
A1	ATV 71 drive, see pages 23 and 24
A2	Network braking unit, see page 149
F1	2 A fuse, 230 V ∿
F2…F4	For fuses, see reference tables on page 149.
Q1	300 mA earth fault circuit-breaker. Provides protection against earth leakage faults. Rating: see motor starters on pages 244 to 247

(1) Additional EMC input filter if necessary, see page 168.
(2) Line choke recommended, see page 160.
(3) For ATV 71HC40N4 drives combined with a 400 kW motor and ATV 71HC50N4, see page 226.

Drives combined with a braking unit and wired onto the same DC bus

ATV 71HC20N4…HC50N4, ATV 71 HC20Y…HC63Y

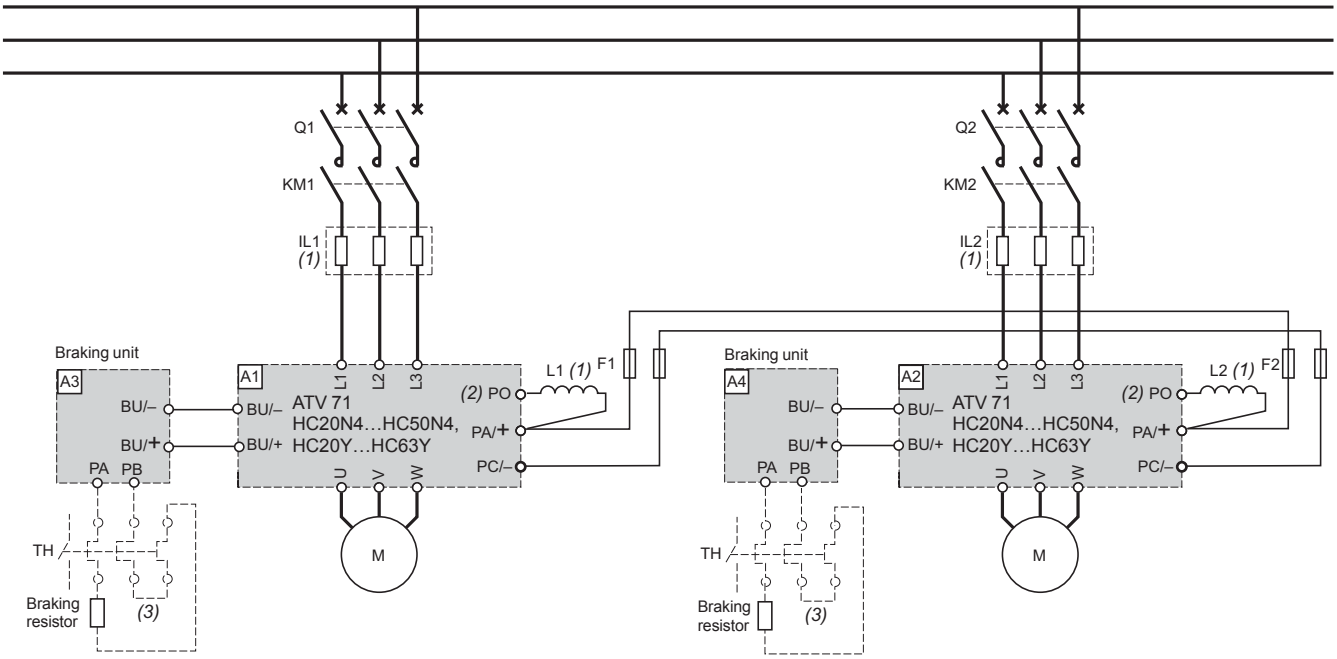

Item	Description
A1, A2	ATV 71 drives, see pages 23 and 25.
A3, A4	Braking units, see pages 134 and 135.
F1, F2, F3	Fast-acting semi-conductor fuses, see page 239. The function of the fuses is to protect the DC bus wiring in the event of a drive short-circuit.
IL1, IL2 *(1)*	Mandatory line chokes for ATV 71HC20Y…HC63Y drives; to be ordered separately, see page 160.
KM1, KM2	Line contactors. Rating: see motor starters on pages 244 to 249.
L1, L2 *(1)*	Mandatory DC chokes for ATV 71HC20N4…HC63N4 drives; supplied as standard with these drives. Not used for ATV 71HC20Y…HC63Y drives. These drives require the presence of line chokes (IL●)
Q1, Q2	Circuit-breakers. Rating: see motor starters on pages 244 to 249.

(1) The use of line chokes or DC chokes depends on the drive type, see table above.
(2) There is no PO terminal on ATV 71HC20Y…HC63Y drives.
(3) A thermal overload relay can be added; its contact must then be integrated into the control circuit.

Drives powered by external DC power supply

ATV 71HD18M3X…HD45M3X, ATV 71●D22N4…●D75N4, ATV 71●U22Y…HD90Y

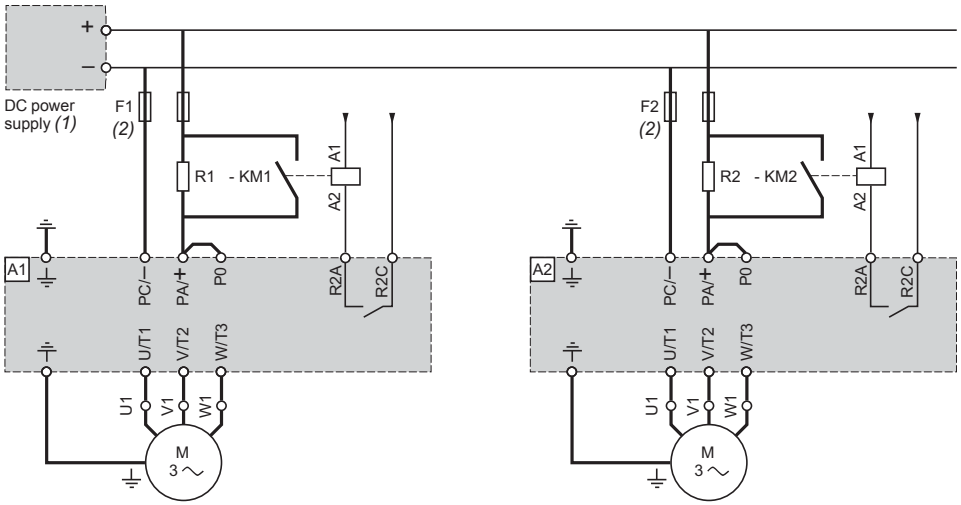

For drives A1, A2	Precharge resistors R1, R2		Contactors (3) KM1, KM2
	Value	Reference	
	Ω		
ATV 71HD18M3X	5	VW3 A7 707	LC1 D32●●
ATV 71HD22M3X	5	VW3 A7 707	LC1 D40●●
ATV 71HD30M3X	5	VW3 A7 707	LC1 D65●●
ATV 71HD37M3X	5	VW3 A7 707	LC1 D80●●
ATV 71HD45M3X	5	VW3 A7 707	LC1 D80●●
ATV 71HD22N4, WD22N4	5	VW3 A7 707	LC1 D25●●
ATV 71HD30N4, WD30N4	5	VW3 A7 707	LC1 D32●●
ATV 71HD37N4, WD37N4	5	VW3 A7 707	LC1 D38●●
ATV 71HD45N4, WD45N4	5	VW3 A7 707	LC1 D40●●
ATV 71HD55N4, WD55N4	5	VW3 A7 707	LC1 D50●●
ATV 71HD75N4, WD75N4	5	VW3 A7 707	LC1 D80●●
ATV 71HU22Y	8	VW3 A7 706	LC1 D09●●
ATV 71HU30Y	8	VW3 A7 706	LC1 D09●●
ATV 71HU40Y	8	VW3 A7 706	LC1 D12●●
ATV 71HU55Y	8	VW3 A7 706	LC1 D12●●
ATV 71HU75Y	8	VW3 A7 706	LC1 D18●●
ATV 71HD11Y	8	VW3 A7 706	LC1 D18●●
ATV 71HD15Y	8	VW3 A7 706	LC1 D25●●
ATV 71HD18Y	8	VW3 A7 706	LC1 D32●●
ATV 71HD22Y	8	VW3 A7 706	LC1 D32●●
ATV 71HD30Y	8	VW3 A7 706	LC1 D40●●
ATV 71HD37Y	8	VW3 A7 706	LC1 D40●●
ATV 71HD45Y	8	VW3 A7 706	LC1 D65●●
ATV 71HD55Y	8	VW3 A7 706	LC1 D65●●
ATV 71HD75Y	8	VW3 A7 706	LC1 D80●●
ATV 71HD90Y	8	VW3 A7 706	LC1 D80●●

(1) DC power supply not included.
(2) Fast-acting semi-conductor fuses, see page 239. The function of the fuses is to protect the DC bus wiring in the event of a drive short-circuit.
(3) See our catalogue "Motor starter solutions. Control and protection components".

***Note:** ATV 71H●●●M3, ATV 71HD11M3X, HD15M3X, ATV 71●075N4…●D18N4 and ATV 71P●●●N4Z drives have an integrated pre-charge circuit. This is used to connect the DC power supply directly to the drive without the need for an external pre-charge circuit.*

Connection schemes for several drives in parallel on the DC bus

Drives with different ratings

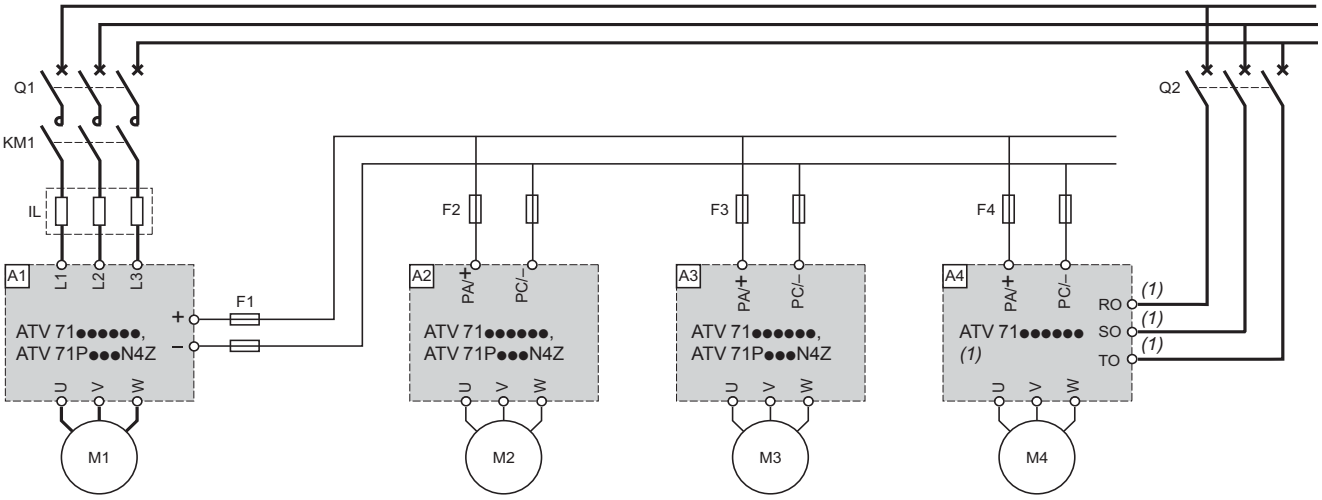

Item	Description
A1	ATV 71 drive, see pages 22 to 25. Drive power = ∑ motor power ratings M1 + M2 + M3 + M4 + …
A2, A3, A4	ATV 71 drives powered by the DC bus. They must be protected using fast-acting semi-conductor fuses. Contactors on the DC circuit are ineffective as the switching action may cause the fuses to blow owing to the high load current.
F1	Fast-acting semi-conductor fuses, see page 239. Drive A1 powered by the AC supply with an output bus. The function of the fuses is to protect the internal diode bridge in the event of a short-circuit on the external DC bus.
F2, F3, F4	Fast-acting semi-conductor fuses, see page 239. Drives A2, A3 and A4 are powered by their DC bus and are not connected to the AC input. The function of the fuses is to protect the DC bus wiring in the event of a drive short-circuit.
IL	Mandatory line chokes for ATV 71HC20Y…HC63Y drives; to be ordered separately, see page 160.
KM1	Line contactors. Rating: see motor starters on pages 243 to 249.
Q1	Circuit-breakers. Rating: see motor starters on pages 243 to 249.

(1) For ATV 71HD55M3X, HD75M3X and ATV 71HD90N4…HC50N4 drives, provide the fan power supply connection.

Connection schemes for several drives in parallel on the DC bus (continued)

Drives with equivalent ratings

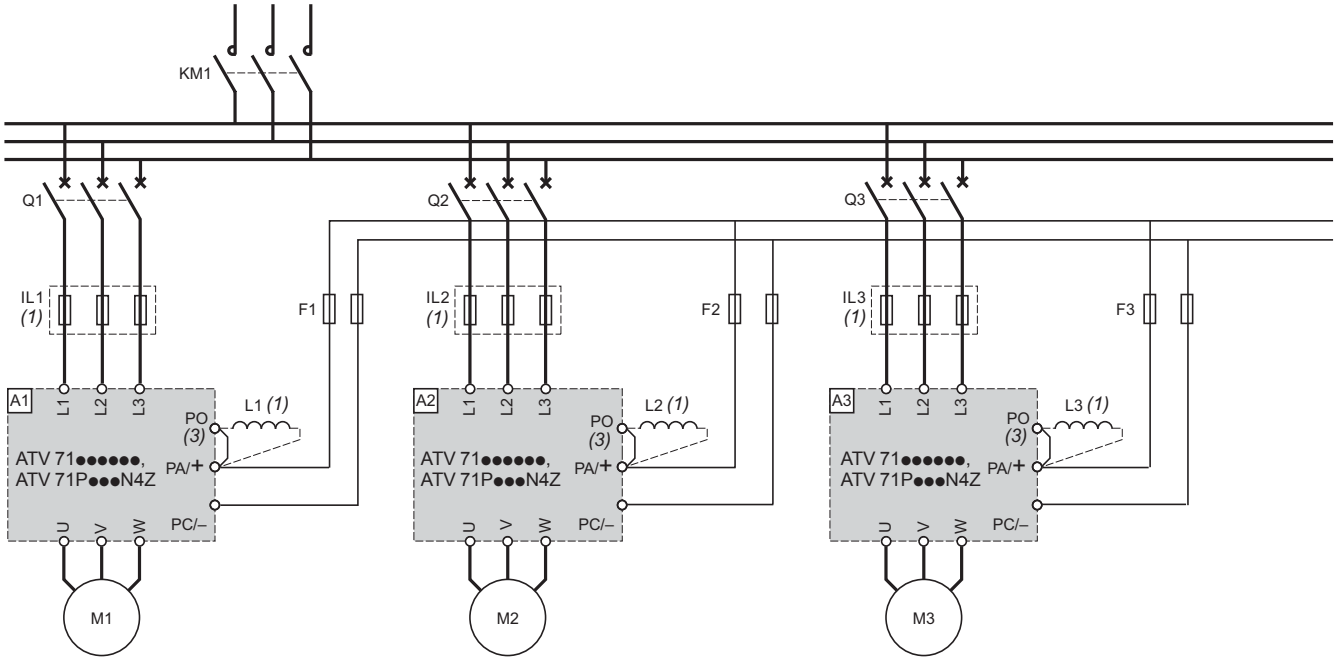

Item	Description
A1, A2, A3	ATV 71 drives, see pages 22 to 25. The power difference between the drives connected in parallel must not exceed one rating.
F1, F2, F3	Fast-acting semi-conductor fuses, see page 239. Drives A1, A2 and A3 powered by the AC supply with an output bus. The function of the fuses is to protect the internal diode bridge in the event of a short-circuit on the external DC bus.
IL1, IL2, IL3 *(1)*	Mandatory line chokes for ATV 71H●●●Y drives; to be ordered separately, see page 160.
KM1	When using a common line contactor, all the Altivar 71 drive load circuits operate in parallel and cannot therefore be overloaded.
L1, L2, L3 *(1)*	Mandatory DC chokes for ATV 71H●●●M3, ATV 71H●●●M3X, ATV 71●●●●N4 and ATV 71P●●●N4Z drives; to be ordered separately (see page 155) except for drives ATV 71HD55M3X, HD75M3X and ATV 71HD90N4…HC50N4 which are supplied as standard with a DC choke. Not used for ATV 71H●●●Y drives. These drives require the presence of line chokes (IL●).
Q1, Q2, Q3	Circuit-breakers on the line supply side to protect drives against overloads. Use trip contacts on the “external fault” logic input or the line contactor. The line contactor must only be activated if all three circuit-breakers are closed, as otherwise there is a risk of damage to the drives.

(1) The use of line chokes or DC chokes depends on the drive type, see table above.
(2) There is no PO terminal on ATV 71HC11Y…HC63Y drives.

Size of DC bus fuses (F1, F2, F3 and F4) depending on the drive rating

For drives	Fast-acting semi-conductor fuses *(1)*
	A
ATV 71H037M3...HU15M3	25
ATV 71HU22M3...HU40M3	50
ATV 71HU55M3, HU75M3	100
ATV 71HD11M3X...HD18M3X	160
ATV 71HD22M3X, HD30M3X	250
ATV 71HD37M3X, HD45M3X	350
ATV 71HD55M3X	500
ATV 71HD75M3X	630
ATV 71H075N4...HU22N4 ATV 71W075N4...WU22N4 ATV 71P075N4Z...PU22N4Z	25
ATV 71HU30N4, HU40N4 ATV 71WU30N4, WU40N4 ATV 71PU30N4Z, PU40N4Z	50
ATV 71HU55N4...HD11N4 ATV 71WU55N4...WD11N4 ATV 71PU55N4Z, PU75N4Z	80
ATV 71HD15N4...HD22N4 ATV 71WD15N4...WD22N4	100
ATV 71HD30N4, HD37N4 ATV 71WD30N4, WD37N4	160
ATV 71HD45N4 ATV 71WD45N4	200
ATV 71HD55N4 ATV 71WD55N4	250
ATV 71HD75N4 ATV 71WD75N4	350
ATV 71HD90N4	315
ATV 71HC11N4, HC13N4	400
ATV 71HC16N4	500
ATV 71HC20N4	630
ATV 71HC25N4, HC28N4	800
ATV 71HC31N4	1000
ATV 71HC40N4, HC50N4	1250
ATV 71HU22Y...HU55Y	25
ATV 71HU75Y...HD15Y	40
ATV 71HD18Y...HD30Y	63
ATV 71HD37Y...HD55Y	125
ATV 71HD75Y, HD90Y	200
ATV 71HC11Y	250
ATV 71HC13Y	315
ATV 71HC16Y	350
ATV 71HC20Y	450
ATV 71HC25Y	630
ATV 71HC31Y	800
ATV 71HC40Y	900
ATV 71HC50Y	1250
ATV 71HC63Y	1500

(1) Nominal voltage of fast-acting semi-conductor fuse:

Line supply voltage	Nominal voltage of fast-acting semi-conductor fuse
V ∼	V
230, 400	690
440, 460, 480	800
500, 600, 690	1000

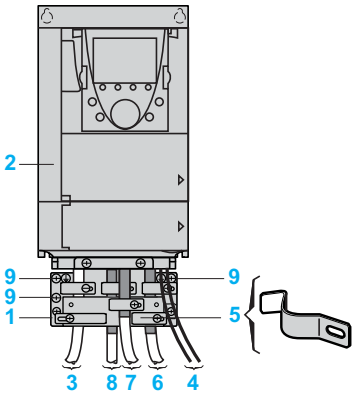

ATV 71H●●●M3, ATV 71HD11M3X, HD15M3X, ATV 71H075N4…HD18N4, ATV 71P075N4Z…PD11N4Z

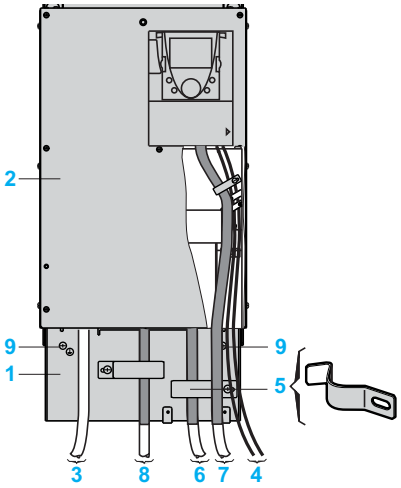

ATV 71HD18M3X…HD45M3X, ATV 71HD22N4…HD75N4 ATV 71HU22Y…HD90Y

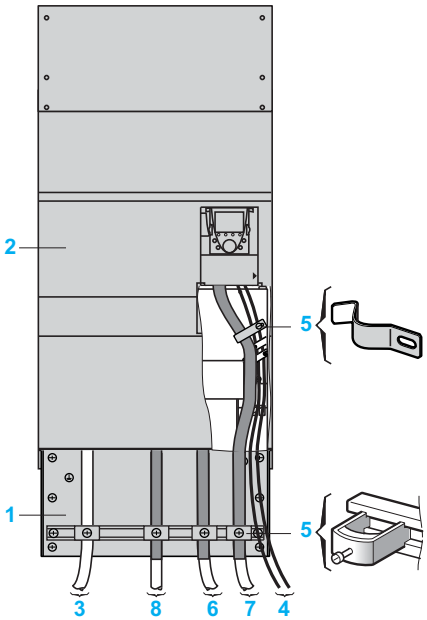

ATV 71HD55M3X, HD75M3X, ATV 71HD90N4…HC50N4 ATV 71HC11Y…HC63Y

Connections for ensuring conformity to EMC standards

Principle

■ Earths between drive, motor and cable shielding must have “high frequency” equipotentiality.
■ Use shielded cables with shielding connected to earth over 360° at both ends for the motor cable, the braking resistor cable and the control-signalling cables. Conduit or metal ducting can be used for part of the shielding length provided that there is no break in the continuity of the earth connections.
■ Ensure maximum separation between the power supply cable (line supply) and the motor cable.

Installation diagram for ATV 71H●●●M3, ATV 71H●●●M3X, ATV 71H●●●N4, ATV 71H●●●Y and ATV 71P●●●N4Z drives

1 Steel plate *(1)*, to be mounted on the drive (earthed casing).
2 Altivar 71 UL Type 1/IP 20 drive.
3 Unshielded power supply wires or cable.
4 Unshielded wires for the output of the fault relay contacts.
5 Attach and earth the shielding of cables 6, 7 and 8 as close as possible to the drive:
- Strip the cable to expose the shielding
- Attach the cable to the plate 1 by tightening the clamp on the stripped part of the shielding
The shielding must be clamped tightly enough to the metal sheet to ensure good contact.
6 Shielded cable for connecting the motor
7 Shielded cable for connecting the control-signal section.
For applications requiring several conductors, use cables with a small cross-section (0.5 mm²).
8 Shielded cable for connecting the braking resistor.
6, 7, 8, the shielding must be connected to earth at both ends.
The shielding must be continuous, and if intermediate terminals are used, they must be placed in EMC shielded metal boxes.
9 Earth screw.

Note: *The HF equipotential earth connection between the drive, motor and cable shielding does not remove the need to connect the PE conductors (green-yellow) to the appropriate terminals on each unit.*
If using an additional EMC input filter, it should be mounted beside or beneath the drive, depending on the rating, and connected directly to the line supply via an unshielded cable. Link 3 on the drive is then made by the filter output cable.

(1) Plate supplied for ATV 71H●●●M3, ATV 71HD11M3X…HD45M3X, ATV 71H075N4…HD75N4, ATV 71HU22Y…HD90Y and ATV 71P075N4Z…PD11N4Z drives.
For ATV 71HD55M3X, HD75M3X, ATV 71HD90N4…HC28N4 and ATV 71HC11Y…HC31Y drives, the plate is supplied with the UL Type 1 conformity kit or the IP 31 conformity kit.
For ATV 71HC31N4…HC50N4 and ATV 71HC40Y…HC63Y drives, the plate is supplied with the IP 31 conformity kit.
These kits must be ordered separately, see pages 32 and 33.

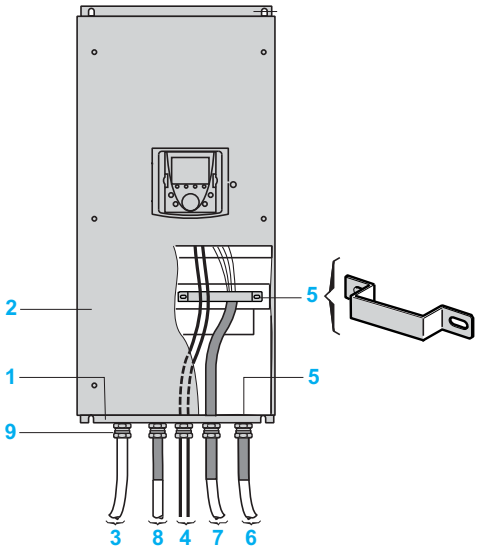

ATV 71W075N4…WD22N4

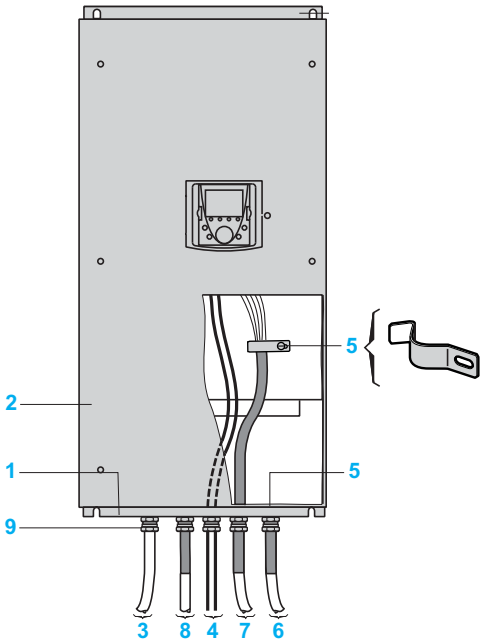

ATV 71WD30N4…WD75N4

Connections for ensuring conformity to EMC standards (continued)

Installation diagram for ATV 71W●●●N4 drives

1 Steel plate mounted on the drive (earthed casing).
2 Altivar 71 UL Type 12/IP 54 drive.
3 Unshielded power supply wires or cable.
4 Unshielded wires for the output of the fault relay contacts.
5 Attach and earth the shielding of cables 6, 7 and 8 as close as possible to the drive:
- Strip the cable to expose the shielding
- Fit the shielded cable in the cable gland 9 ensuring it is fully in contact through 360°
- Fold back the shielding and clamp it between the ring and body of the cable gland.

Depending on the rating, the shielding of the cable 7 can be earthed using a cable gland 9, a clamp 5 or a cable clip 5.
The shielding must be clamped tightly enough to the metal sheet to ensure good contact.
6 Shielded cable for connecting the motor
7 Shielded cable for connecting the control-signal section.
For applications requiring several conductors, use cables with a small cross-section (0.5 mm²).
8 Shielded cable for connecting the braking resistor.
6, 7, 8, the shielding must be connected to earth at both ends.
The shielding must be continuous, and if intermediate terminals are used, they must be placed in EMC shielded metal boxes.
9 Metal cable gland (not supplied) for cables 6, 7 and 8.
Standard cable gland (not supplied) for cables 3 and 4.

Note: *The HF equipotential earth connection between the drive, motor and cable shielding does not remove the need to connect the PE conductors (green-yellow) to the appropriate terminals on each unit.*
If using an additional EMC input filter, it should be mounted beside the drive and connected directly to the line supply via an unshielded cable. Link 3 on the drive is then made by the filter output cable.

Variable speed drives

Altivar 71

Motor starters: supply voltage 200…240 V

DF53387-16-M

Applications

Circuit-breaker/contactor/drive combinations can be used to ensure continuous service of the installation with optimum safety.
The type of circuit-breaker/contactor coordination selected can reduce maintenance costs in the event of a motor short-circuit by minimizing the time required to make the necessary repairs and the cost of replacement equipment. The suggested combinations provide type 1 or type 2 coordination depending on the drive rating.

Type 2 coordination: A motor short-circuit will not damage the device or affect its settings. The motor starter should be able to operate once the electrical fault has been removed. The electrical isolation provided by the circuit-breaker will not be affected by the short-circuit. Welding of the contactor contacts is permissible if they can be separated easily.

103282_14-M

Type 1 coordination: The electrical isolation provided by the circuit-breaker will not be affected by the incident and no other elements apart from the contactor are damaged as a result of the motor short-circuit.

The drive controls the motor, provides protection against short-circuits between the drive and the motor and protects the motor cable against overloads. The overload protection is provided by the drive's motor thermal protection. If this protection is removed, external thermal protection should be provided.
Before restarting the installation, the cause of the trip must be removed.

PF107477-28-M

GV2 L20
+
LC1 D25●●
+
ATV 71HU22M3

Motor starters for UL Type 1/IP 20 drives

Motor Power (1)		Drive Reference	Circuit-breaker Reference (2)	Rating	Im	Line contactor Reference (3) (4)
kW	*HP*			A	A	
Single-phase supply voltage 200…240 V 50/60 Hz. Type 2 coordination						
0.37	*0.5*	**ATV 71H075M3**	**GV2 L10**	6.3	–	**LC1 D18●●**
0.75	*1*	**ATV 71HU15M3**	**GV2 L14**	10	–	**LC1 D18●●**
1.5	*2*	**ATV 71HU22M3**	**GV2 L20**	18	–	**LC1 D25●●**
2.2	*3*	**ATV 71HU30M3**	**GV2 L22**	25	–	**LC1 D25●●**
3	–	**ATV 71HU40M3** *(5)*	**GV2 L22**	25	–	**LC1 D25●●**
4	*5*	**ATV 71HU55M3** *(5)*	**GV3 L40**	40	–	**LC1 D40●●**
5.5	*7.5*	**ATV 71HU75M3** *(5)*	**GV3 L50**	50	–	**LC1 D50●●**

(1) Standard power ratings for 230 V 50/60 Hz 4-pole motors.
The values expressed in HP conform to the NEC (National Electrical Code).
(2) Breaking capacity of circuit-breakers according to standard IEC 60947-2:

Circuit-breaker	Icu (kA) for 240 V
GV2 L	50
GV3 L	100

(3) Composition of contactors:
LC1 D18 to LC1 D50: 3 poles + 1 "N/O" auxiliary contact and 1 "N/C" auxiliary contact.
(4) Replace ●● with the control circuit voltage reference indicated in the table below:

	Volts ∿	24	48	110	220	230	240
LC1 D	50 Hz	**B5**	**E5**	**F5**	**M5**	**P5**	**U5**
	60 Hz	**B6**	**E6**	**F6**	**M6**	**–**	**U6**
	50/60 Hz	**B7**	**E7**	**F7**	**M7**	**P7**	**U7**

For other voltages available between 24 V and 660 V, or a DC control circuit, please consult your Regional Sales Office.
(5) A line choke must be added, see page 160.

Variable speed drives
Altivar 71
Motor starters: supply voltage 200…240 V

DF533367-16-M

103282_14-M

PF105778-29-M

GV2 L20
+
LC1 D25●●
+
ATV 71HU30M3

Motor starters for UL Type 1/IP 20 drives

Motor Power *(1)*		Drive Reference	Circuit-breaker Reference *(2)*	Rating	Im	Line contactor Reference *(3) (4)*
kW	HP			A	A	
Three-phase supply voltage 200…240 V 50/60 Hz. Type 2 coordination						
0.37	*0.5*	**ATV 71H037M3**	**GV2 L08**	4	–	**LC1 D09●●**
0.75	*1*	**ATV 71H075M3**	**GV2 L14**	10	–	**LC1 D09●●**
1.5	*2*	**ATV 71HU15M3**	**GV2 L14**	10	–	**LC1 D18●●**
2.2	*3*	**ATV 71HU22M3**	**GV2 L16**	14	–	**LC1 D18●●**
3	–	**ATV 71HU30M3**	**GV2 L20**	18	–	**LC1 D25●●**
4	*5*	**ATV 71HU40M3**	**GV2 L22**	25	–	**LC1 D25●●**
5.5	*7.5*	**ATV 71HU55M3**	**GV3 L40**	40	–	**LC1 D40●●**
7.5	*10*	**ATV 71HU75M3**	**GV3 L50**	50	–	**LC1 D50●●**
11	*15*	**ATV 71HD11M3X**	**GV3 L65**	65	–	**LC1 D65●●**
15	*20*	**ATV 71HD15M3X**	**NS100NMA80**	80	480	**LC1 D65●●**
18.5	*25*	**ATV 71HD18M3X**	**NS100NMA100**	100	600	**LC1 D80●●**
22	*30*	**ATV 71HD22M3X**	**NS100NMA100**	100	600	**LC1 D80●●**
30	*40*	**ATV 71HD30M3X**	**NS160NMA150**	150	1350	**LC1 D115●●**
37	*50*	**ATV 71HD37M3X**	**NS160NMA150**	150	1350	**LC1 D150●●**
45	*60*	**ATV 71HD45M3X**	**NS250NMA220**	220	1980	**LC1 D150●●**
55	*75*	**ATV 71HD55M3X**	**NS250NMA220**	220	1980	**LC1 F225●●**
75	*100*	**ATV 71HD75M3X**	**NS400NMA320**	320	1920	**LC1 F265●●**

(1) Standard power ratings for 230 V 50/60 Hz 4-pole motors.
The values expressed in HP conform to the NEC (National Electrical Code).
(2) NS●●●NMA: products sold under the Merlin Gerin brand.
Breaking capacity of circuit-breakers according to standard IEC 60947-2:

Circuit-breaker	Icu (kA) for 240 V
GV2 L08…L20, GV3 L40…L65	100
GV2 L22	50
NS●●●NMA	85

(3) Composition of contactors:
LC1 D09 to LC1 D150: 3 poles + 1 "N/O" auxiliary contact and 1 "N/C" auxiliary contact.
LC1 F●●●: 3 poles. To add auxiliary contacts or other accessories, please consult our specialist catalogue "Motor starter solutions. Control and protection components".
(4) Replace ●● with the control circuit voltage reference indicated in the table below:

	Volts ∼	24	48	110	220	230	240
LC1 D	50 Hz	**B5**	**E5**	**F5**	**M5**	**P5**	**U5**
	60 Hz	**B6**	**E6**	**F6**	**M6**	–	**U6**
	50/60 Hz	**B7**	**E7**	**F7**	**M7**	**P7**	**U7**
LC1 F225	50 Hz (LX1 coil)	**B5**	**E5**	**F5**	**M5**	**P5**	**U5**
	60 Hz (LX1 coil)	–	**E6**	**F6**	**M6**	–	**U6**
	40…400 Hz (LX9 coil)	–	**E7**	**F7**	**M7**	**P7**	**U7**
LC1 F265	40…400 Hz (LX1 coil)	**B7**	**E7**	**F7**	**M7**	**P7**	**U7**

For other voltages available between 24 V and 660 V, or a DC control circuit, please consult your Regional Sales Office.

Variable speed drives
Altivar 71
Motor starters: supply voltage 380…415 V

DF533345-20-M

105517-13-M

PF107476-32-M

NS160●MA150
+
LC1 D115●●
+
ATV 71HD45N4

Motor starters for UL Type 1/IP 20 drives

Motor Power (1) kW	HP	Drive Reference	Circuit-breaker Reference (2)	Rating A	Im A	Line contactor Reference (3) (4)
Three-phase supply voltage 380…415 V 50/60 Hz. Type 2 coordination						
0.75	1	**ATV 71H075N4**	**GV2 L08**	4	–	**LC1 D18●●**
1.5	2	**ATV 71HU15N4**	**GV2 L10**	6.3	–	**LC1 D18●●**
2.2	3	**ATV 71HU22N4**	**GV2 L14**	10	–	**LC1 D18●●**
3	–	**ATV 71HU30N4**	**GV2 L16**	14	–	**LC1 D18●●**
4	5	**ATV 71HU40N4**	**GV2 L16**	14	–	**LC1 D18●●**
5.5	7.5	**ATV 71HU55N4**	**GV2 L22**	25	–	**LC1 D25●●**
7.5	10	**ATV 71HU75N4**	**GV3 L32**	32	–	**LC1 D40●●**
11	15	**ATV 71HD11N4**	**GV3 L40**	40	–	**LC1 D40●●**
15	20	**ATV 71HD15N4**	**GV3 L50**	50	–	**LC1 D50●●**
18.5	25	**ATV 71HD18N4**	**GV3 L50**	50	–	**LC1 D50●●**
22	30	**ATV 71HD22N4**	**GV3 L65**	65	–	**LC1 D65●●**
30	40	**ATV 71HD30N4**	**NS80HMA80**	80	480	**LC1 D65●●**
37	50	**ATV 71HD37N4**	**NS100●MA100**	100	800	**LC1 D80●●**
45	60	**ATV 71HD45N4**	**NS160●MA150**	150	1350	**LC1 D115●●**
55	75	**ATV 71HD55N4**	**NS160●MA150**	150	1350	**LC1 D115●●**
75	100	**ATV 71HD75N4**	**NS250●MA220**	220	1980	**LC1 F185●●**
90	125	**ATV 71HD90N4**	**NS250●MA220**	220	1980	**LC1 F185●●**
110	150	**ATV 71HC11N4**	**NS250●MA220**	220	1980	**LC1 F185●●**
132	200	**ATV 71HC13N4**	**NS400●MA320**	320	1920	**LC1 F265●●**
160	250	**ATV 71HC16N4**	**NS400●MA320**	320	1920	**LC1 F265●●**
200	300	**ATV 71HC20N4**	**NS400●MA320**	320	1920	**LC1 F400●●**
220	350	**ATV 71HC25N4**	**NS630●MAE500**	500	3000	**LC1 F400●●**
250	400	**ATV 71HC25N4**	**NS630●MAE500**	500	3000	**LC1 F500●●**
280	450	**ATV 71HC28N4**	**NS630●MAE500**	500	3000	**LC1 F500●●**
315	500	**ATV 71HC31N4**	**NS630●MAE500**	500	3000	**LC1 F500●●**
Three-phase supply voltage 380…415 V 50/60 Hz. Type 1 coordination						
355	–	**ATV 71HC40N4**	**NS800 MicroLogic 2 or 5 (LR OFF)**	800	1600	**LC1 F630●●**
400	600	**ATV 71HC40N4**	**NS800 MicroLogic 2 or 5 (LR OFF)**	800	1600	**LC1 F630●●**
500	700	**ATV 71HC50N4**	**NS1000 MicroLogic 2 or 5 (LR OFF)**	1000	2000	**LC1 F800●●**

(1) Standard power ratings for 400 V 50/60 Hz 4-pole motors.
The values expressed in HP conform to the NEC (National Electrical Code).
(2) NS80HMA, NS●●●●, NS800, NS1000: products sold under the Merlin Gerin brand.
For references to be completed, replace the dot with the letter corresponding to the circuit-breaker breaking performance (N, H, L).
Breaking capacity of circuit-breakers according to standard IEC 60947-2:

Circuit-breaker	Icu (kA) for 400 V			
		N	H	L
GV2 L08…L14, GV3 L32	100	–	–	–
GV2 L16, L22, GV3 L40…L65	50	–	–	–
NS80HMA	70	–	–	–
NS100●MA	–	25	70	150
NS160●MA, NS250●MA	–	36	70	150
NS400●, NS630●, NS800, NS1000	–	45	70	150

(3) Composition of contactors:
LC1 D18 to LC1 D150: 3 poles + 1 "N/O" auxiliary contact and 1 "N/C" auxiliary contact.
LC1 F●●●: 3 poles. To add auxiliary contacts or other accessories, please consult our specialist catalogue "Motor starter solutions. Control and protection components".
(4) Replace ●● with the control circuit voltage reference indicated in the table below:

	Volts ∿	24	48	110	220	230	240
LC1 D	50 Hz	**B5**	**E5**	**F5**	**M5**	**P5**	**U5**
	60 Hz	**B6**	**E6**	**F6**	**M6**	**–**	**U6**
	50/60 Hz	**B7**	**E7**	**F7**	**M7**	**P7**	**U7**
LC1 F185	50 Hz (LX1 coil)	**B5**	**E5**	**F5**	**M5**	**P5**	**U5**
	60 Hz (LX1 coil)	**–**	**E6**	**F6**	**M6**	**–**	**U6**
	40…400 Hz (LX9 coil)	**–**	**E7**	**F7**	**M7**	**P7**	**U7**
LC1 F265	40…400 Hz (LX1 coil)	**B7**	**E7**	**F7**	**M7**	**P7**	**U7**
LC1 F400…F630	40…400 Hz (LX1 coil)	**–**	**E7**	**F7**	**M7**	**P7**	**U7**
LC1 F800	40…400 Hz (LX1 coil)	**–**	**–**	**FE7**	**P7**	**P7**	**P7**

For other voltages available between 24 V and 660 V, or a DC control circuit, please consult your Regional Sales Office.

Variable speed drives
Altivar 71
Motor starters: supply voltage 440…480 V

DF534573

105517-13-M

107469-33-M

NS160●MA150
+
LC1 D115●●
+
ATV 71HD75N4

Motor starters for UL Type 1/IP 20 drives

Motor Power (1) kW	HP	Drive Reference	Circuit-breaker Reference (2)	Rating A	Im A	Line contactor Reference (3) (4)
Three-phase supply voltage 440…480 V 50/60 Hz. Type 2 coordination						
0.75	1	**ATV 71H075N4**	**GV2 L08**	4	–	**LC1 D18●●**
1.5	2	**ATV 71HU15N4**	**GV2 L10**	6.3	–	**LC1 D18●●**
2.2	3	**ATV 71HU22N4**	**GV2 L14**	10	–	**LC1 D18●●**
3	–	**ATV 71HU30N4**	**GV2 L14**	10	–	**LC1 D18●●**
4	5	**ATV 71HU40N4**	**GV2 L16**	14	–	**LC1 D18●●**
5.5	7.5	**ATV 71HU55N4**	**GV2 L22**	25	–	**LC1 D25●●**
7.5	10	**ATV 71HU75N4**	**GV3 L32**	32	–	**LC1 D40●●**
11	15	**ATV 71HD11N4**	**GV3 L40**	40	–	**LC1 D40●●**
15	20	**ATV 71HD15N4**	**GV3 L50**	50	–	**LC1 D50●●**
18.5	25	**ATV 71HD18N4**	**GV3 L50**	50	–	**LC1 D50●●**
22	30	**ATV 71HD22N4**	**GV3 L50**	50	–	**LC1 D65●●**
30	40	**ATV 71HD30N4**	**GV3 L65**	65	–	**LC1 D65●●**
37	50	**ATV 71HD37N4**	**NS100●MA100**	100	600	**LC1 D80●●**
45	60	**ATV 71HD45N4**	**NS160●MA100**	100	600	**LC1 D115●●**
55	75	**ATV 71HD55N4**	**NS160●MA150**	150	1350	**LC1 D115●●**
75	100	**ATV 71HD75N4**	**NS160●MA150**	150	1350	**LC1 D115●●**
90	125	**ATV 71HD90N4**	**NS160●MA150**	150	1350	**LC1 D115●●**
110	150	**ATV 71HC11N4**	**NS250●MA220**	220	1980	**LC1 F185●●**
132	200	**ATV 71HC13N4**	**NS250●MA220**	220	1980	**LC1 F225●●**
160	250	**ATV 71HC16N4**	**NS400●MA320**	320	1920	**LC1 F265●●**
200	300	**ATV 71HC20N4**	**NS400●MA320**	320	1920	**LC1 F330●●**
220	350	**ATV 71HC25N4**	**NS400●MA320**	320	1920	**LC1 F400●●**
250	400	**ATV 71HC25N4**	**NS630●MAE500**	500	3000	**LC1 F400●●**
280	450	**ATV 71HC28N4**	**NS630●MAE500**	500	3000	**LC1 F500●●**
315	500	**ATV 71HC31N4**	**NS630●MAE500**	500	3000	**LC1 F500●●**
355	–	**ATV 71HC40N4**	**NS630●MAE500**	500	3000	**LC1 F630●●**
Three-phase supply voltage 440…480 V 50/60 Hz. Type 1 coordination						
400	600	**ATV 71HC40N4**	**NS800 MicroLogic 2 or 5 (LR OFF)**	800	1600	**LC1 F630●●**
500	700	**ATV 71HC50N4**	**NS1000 MicroLogic 2 or 5 (LR OFF)**	1000	2000	**LC1 F800●●**

(1) Standard power ratings for 400 V 50/60 Hz 4-pole motors.
The values expressed in HP conform to the NEC (National Electrical Code).
(2) NS●●●●, NS800, NS1000: products sold under the Merlin Gerin brand.
For references to be completed, replace the dot with the letter corresponding to the circuit-breaker breaking performance (N, H, L).
Breaking capacity of circuit-breakers according to standard IEC 60947-2:

Circuit-breaker	Icu (kA) for 440 V			
		N	H	L
GV2 L08, GV2 L10, GV3 L32	100	–	–	–
GV2 L14…GV2 L22	20	–	–	–
GV3 L40…L65	50	–	–	–
NS100●MA	–	25	65	130
NS160●MA, NS250●MA	–	35	65	130
NS400●, NS630●	–	42	65	130
NS800, NS1000	–	50	65	130

(3) Composition of contactors:
LC1 D18 to LC1 D115: 3 poles + 1 "N/O" auxiliary contact and 1 "N/C" auxiliary contact.
LC1 F●●●: 3 poles. To add auxiliary contacts or other accessories, please consult our specialist catalogue "Motor starter solutions. Control and protection components".
(4) Replace ●● with the control circuit voltage reference indicated in the table below:

	Volts ∿	24	48	110	220	230	240
LC1 D	50 Hz	**B5**	**E5**	**F5**	**M5**	**P5**	**U5**
	60 Hz	**B6**	**E6**	**F6**	**M6**	**–**	**U6**
	50/60 Hz	**B7**	**E7**	**F7**	**M7**	**P7**	**U7**
LC1 F185	50 Hz (LX1 coil)	**B5**	**E5**	**F5**	**M5**	**P5**	**U5**
	60 Hz (LX1 coil)	**–**	**E6**	**F6**	**M6**	**–**	**U6**
	40…400 Hz (LX9 coil)	**–**	**E7**	**F7**	**M7**	**P7**	**U7**
LC1 F265, F330	40…400 Hz (LX1 coil)	**B7**	**E7**	**F7**	**M7**	**P7**	**U7**
LC1 F400…F630	40…400 Hz (LX1 coil)	**–**	**E7**	**F7**	**M7**	**P7**	**U7**
LC1 F800	40…400 Hz (LX1 coil)	**–**	**–**	**FE7**	**P7**	**P7**	**P7**

For other voltages available between 24 V and 660 V, or a DC control circuit, please consult your Regional Sales Office.

Variable speed drives
Altivar 71
Motor starters: supply voltage 380…480 V

DF533345-20-M

105517-13-M

PF107482-32-M

NS160●MA150
+
LC1 D115●●
+
ATV 71WD55N4

Motor starters for UL Type 12/IP 54 drives

Motor Power (1)		Drive Reference	Circuit-breaker Reference (2)	Rating	Im	Line contactor Reference (3) (4)
kW	HP			A	A	
Three-phase supply voltage 380…415 V 50/60 Hz. Type 2 coordination						
0.75	1	ATV 71W075N4	GV2 L08	4	–	LC1 D18●●
1.5	2	ATV 71WU15N4	GV2 L10	6.3	–	LC1 D18●●
2.2	3	ATV 71WU22N4	GV2 L14	10	–	LC1 D18●●
3	–	ATV 71WU30N4	GV2 L16	14	–	LC1 D18●●
4	5	ATV 71WU40N4	GV2 L16	14	–	LC1 D18●●
5.5	7.5	ATV 71WU55N4	GV2 L22	25	–	LC1 D25●●
7.5	10	ATV 71WU75N4	GV3 L32	32	–	LC1 D40●●
11	15	ATV 71WD11N4	GV3 L40	40	–	LC1 D40●●
15	20	ATV 71WD15N4	GV3 L50	50	–	LC1 D50●●
18.5	25	ATV 71WD18N4	GV3 L50	50	–	LC1 D50●●
22	30	ATV 71WD22N4	GV3 L65	65	–	LC1 D65●●
30	40	ATV 71WD30N4	NS80HMA80	80	480	LC1 D65●●
37	50	ATV 71WD37N4	NS100●MA100	100	800	LC1 D80●●
45	60	ATV 71WD45N4	NS160●MA150	150	1350	LC1 D115●●
55	75	ATV 71WD55N4	NS160●MA150	150	1350	LC1 D115●●
75	100	ATV 71WD75N4	NS250●MA150	150	1350	LC1 D150●●
Three-phase supply voltage 440…480 V 50/60 Hz. Type 2 coordination						
0.75	1	ATV 71W075N4	GV2 L08	4	–	LC1 D18●●
1.5	2	ATV 71WU15N4	GV2 L10	6.3	–	LC1 D18●●
2.2	3	ATV 71WU22N4	GV2 L14	10	–	LC1 D18●●
3	–	ATV 71WU30N4	GV2 L14	10	–	LC1 D18●●
4	5	ATV 71WU40N4	GV2 L16	14	–	LC1 D18●●
5.5	7.5	ATV 71WU55N4	GV2 L22	25	–	LC1 D25●●
7.5	10	ATV 71WU75N4	GV3 L32	32	–	LC1 D40●●
11	15	ATV 71WD11N4	GV3 L40	40	–	LC1 D40●●
15	20	ATV 71WD15N4	GV3 L50	50	–	LC1 D50●●
18.5	25	ATV 71WD18N4	GV3 L50	50	–	LC1 D50●●
22	30	ATV 71WD22N4	GV3 L65	65	–	LC1 D65●●
30	40	ATV 71WD30N4	NS100●MA100	100	600	LC1 D65●●
37	50	ATV 71WD37N4	NS100●MA100	100	600	LC1 D80●●
45	60	ATV 71WD45N4	NS160●MA100	100	600	LC1 D115●●
55	75	ATV 71WD55N4	NS160●MA150	150	1350	LC1 D115●●
75	100	ATV 71WD75N4	NS160●MA150	150	1350	LC1 D115●●

(1) Standard power ratings for 400 V 50/60 Hz 4-pole motors.
The values expressed in HP conform to the NEC (National Electrical Code).
(2) NS80HMA●●, NS●●●●MA: products sold under the Merlin Gerin brand.
For references to be completed, replace the dot with the letter corresponding to the circuit-breaker breaking performance (N, H, L).
Breaking capacity of circuit-breakers according to standard IEC 60947-2:

Circuit-breaker	Icu (kA) for 400 V	N	H	L
GV2 L08…L14, GV3 L32	100	–	–	–
GV2 L16, L22, GV3 L40…L65	50	–	–	–
NS80HMA	70	–	–	–
NS100●MA	–	25	70	150
NS160●MA, NS250●MA	–	36	70	150
Circuit-breaker	**Icu (kA) for 440 V**	**N**	**H**	**L**
GV2 L08, GV2 L10, GV3 L32	100	–	–	–
GV2 L14…L22	20	–	–	–
GV3 L40…L65	50			
NS100●MA	–	25	65	130
NS160●MA	–	35	65	130

(3) Composition of contactors:
LC1 D18 to LC1 D150: 3 poles + 1 "N/O" auxiliary contact and 1 "N/C" auxiliary contact.
(4) Replace ●● with the control circuit voltage reference indicated in the table below:

	Volts ∿	24	48	110	220	230	240
LC1 D	50 Hz	B5	E5	F5	M5	P5	U5
	60 Hz	B6	E6	F6	M6	–	U6
	50/60 Hz	B7	E7	F7	M7	P7	U7

For other voltages available between 24 V and 660 V, or a DC control circuit, please consult your Regional Sales Office.

Variable speed drives
Altivar 71
Motor starters: supply voltage 380…480 V

DF535086-16-M

103279-14-M

PF107481-28-M

GV2 L16
+
LC1 D18●●
+
ATV 71PU40N4Z

Motor starters for UL Type 1/IP 20 drives on base plates

Motor Power *(1)* kW	HP	Drive Reference	Circuit-breaker Reference *(2)*	Rating A	Im A	Line contactor Reference *(3) (4)*
Three-phase supply voltage 380…415 V 50/60 Hz. Type 2 coordination						
0.75	*1*	**ATV 71P075N4Z**	**GV2 L08**	4	–	**LC1 D18●●**
1.5	*2*	**ATV 71PU15N4Z**	**GV2 L10**	6.3	–	**LC1 D18●●**
2.2	*3*	**ATV 71PU22N4Z**	**GV2 L14**	10	–	**LC1 D18●●**
3	–	**ATV 71PU30N4Z**	**GV2 L16**	14	–	**LC1 D18●●**
4	*5*	**ATV 71PU40N4Z**	**GV2 L16**	14	–	**LC1 D18●●**
5.5	*7.5*	**ATV 71PU55N4Z**	**GV2 L22**	25	–	**LC1 D25●●**
7.5	*10*	**ATV 71PU75N4Z**	**GV3 L32**	32	–	**LC1 D40●●**
Three-phase supply voltage 440…480 V 50/60 Hz. Type 2 coordination						
0.75	*1*	**ATV 71P075N4Z**	**GV2 L08**	4	–	**LC1 D18●●**
1.5	*2*	**ATV 71PU15N4Z**	**GV2 L10**	6.3	–	**LC1 D18●●**
2.2	*3*	**ATV 71PU22N4Z**	**GV2 L14**	10	–	**LC1 D18●●**
3	–	**ATV 71PU30N4Z**	**GV2 L14**	10	–	**LC1 D18●●**
4	*5*	**ATV 71PU40N4Z**	**GV2 L16**	14	–	**LC1 D18●●**
5.5	*7.5*	**ATV 71PU55N4Z**	**GV2 L22**	25	–	**LC1 D25●●**
7.5	*10*	**ATV 71PU75N4Z**	**GV3 L32**	32	–	**LC1 D40●●**

(1) Standard power ratings for 400 V 50/60 Hz 4-pole motors.
The values expressed in HP conform to the NEC (National Electrical Code).
(2) Breaking capacity of circuit-breakers according to standard IEC 60947-2:

Circuit-breaker	Icu (kA) for 400 V			
		N	H	L
GV2 L08...L14, GV3 L32	100	–	–	–
GV2 L16, L22	50	–	–	–

(3) Composition of contactors:
LC1 D18 to LC1 D40: 3 poles + 1 "N/O" auxiliary contact and 1 "N/C" auxiliary contact.
(4) Replace ●● with the control circuit voltage reference indicated in the table below:

	Volts ∿	24	48	110	220	230	240
LC1 D	50 Hz	**B5**	**E5**	**F5**	**M5**	**P5**	**U5**
	60 Hz	**B6**	**E6**	**F6**	**M6**	**–**	**U6**
	50/60 Hz	**B7**	**E7**	**F7**	**M7**	**P7**	**U7**

For other voltages available between 24 V and 660 V, or a DC control circuit, please consult your Regional Sales Office.

Variable speed drives
Altivar 71
Motor starters: supply voltage 690 V

DF535086-16-M

103282-14-M

107537-26-M

GV2 L16
+
LC1 D25●●
+
ATV 71HU75Y

Motor starters for UL Type 1/IP 20 drives

Motor Power *(1)* kW	Drive Reference	Circuit-breaker Reference *(2)*	Rating A	Im A	Line contactor Reference *(3) (4)*
Three-phase supply voltage 690 V 50 Hz. Type 2 coordination					
2.2	**ATV 71HU22Y**	**GV2 L10**	6.3	–	**LC1 D25●●**
3	**ATV 71HU30Y**	**GV2 L10**	6.3	–	**LC1 D25●●**
4	**ATV 71HU40Y**	**GV2 L14**	10	–	**LC1 D25●●**
5.5	**ATV 71HU55Y**	**GV2 L14**	10	–	**LC1 D25●●**
7.5	**ATV 71HU75Y**	**GV2 L16**	14	–	**LC1 D25●●**
11	**ATV 71HD11Y**	**GV2 L20**	18	–	**LC1 D40●●**
15	**ATV 71HD15Y**	**GV2 L22**	25	–	**LC1 D40●●**
18.5	**ATV 71HD18Y**	**GV3 L25**	25	–	**LC1 D40●●**
22	**ATV 71HD22Y**	**GV3 L32**	32	–	**LC1 D65●●**
30	**ATV 71HD30Y**	**GV3 L40**	40	–	**LC1 D80●●**
37	**ATV 71HD37Y**	**GV3 L50**	50	–	**LC1 D80●●**
45	**ATV 71HD45Y**	**GV3 L65**	65	–	**LC1 D80●●**
55	**ATV 71HD55Y**	**NS100LMA100**	100	1100	**LC1 D80●●**
75	**ATV 71HD75Y**	**NS100LMA100**	100	1100	**LC1 D95●●**
90	**ATV 71HD90Y**	**NS400LMA320**	320	2880	**LC1 F265●●**
110	**ATV 71HC11Y**	**NS400LMA320**	320	2880	**LC1 F265●●**
132	**ATV 71HC13Y**	**NS400LMA320**	320	2880	**LC1 F265●●**
160	**ATV 71HC16Y**	**NS400LMA320**	320	2880	**LC1 F265●●**
200	**ATV 71HC20Y**	**NS400LMA320**	320	2880	**LC1 F330●●**

(1) Standard power ratings for 690 V 50 Hz 4-pole motors.
(2) NS●●●LMA: products sold under the Merlin Gerin brand.
Breaking capacity of circuit-breakers according to standard IEC 60947-2:

Circuit-breaker	Icu (kA) for 690 V
GV2 L10…L22, GV3 L25, L32	4
GV3 L40…L65	5
NS●●●LMA	75

(3) Composition of contactors:
LC1 D●●: 3 poles + 1 "N/O" auxiliary contact and 1 "N/C" auxiliary contact.
LC1 F●●●: 3 poles. To add auxiliary contacts or other accessories, please consult our specialist catalogue "Motor starter solutions. Control and protection components".
(4) Replace ●● with the control circuit voltage reference indicated in the table below:

	Volts ∿	24	48	110	220	230	240
LC1 D	50 Hz	**B5**	**E5**	**F5**	**M5**	**P5**	**U5**
	60 Hz	**B6**	**E6**	**F6**	**M6**	**–**	**U6**
	50/60 Hz	**B7**	**E7**	**F7**	**M7**	**P7**	**U7**
LC1 F	40…400 Hz (LX1 coil)	**B7**	**E7**	**F7**	**M7**	**P7**	**U7**

For other voltages available between 24 V and 660 V, or a DC control circuit, please consult your Regional Sales Office.

Variable speed drives
Altivar 71
Motor starters: supply voltage 690 V

PF048286

PF105715

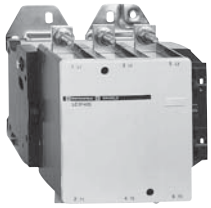

PF107540

NS630LMA500
+
LC1 F400
+
ATV 71HC25Y

Motor starters for UL Type 1/IP 20 drives

Motor Power *(1)*	Drive Reference	Circuit-breaker Reference *(2)*	Rating	Im	Line contactor Reference *(3) (4)*
kW			A	A	
Three-phase supply voltage 690 V 50 Hz. Type 1 coordination					
250	**ATV 71HC25Y**	**NS630LMA500**	500	–	**LC1 F400●●**
315	**ATV 71HC31Y**	**NS630LMA500**	500	–	**LC1 F500●●**
400	**ATV 71HC40Y**	**NS630LMA500**	500	–	**LC1 F630●●**
500	**ATV 71HC50Y**	**NS630L MicroLogic 5**	630	–	**LC1 BL33●●**
630	**ATV 71HC63Y**	**NS630L MicroLogic 5**	630	–	**LC1 BL33●●**

(1) Standard power ratings for 690 V 50 Hz 4-pole motors.
(2) NS630L: products sold under the Merlin Gerin brand.
Breaking capacity of circuit-breakers according to standard IEC 60947-2:

Circuit-breaker	Icu (kA) for 690 V
NS630L	75

(3) Composition of contactors:
LC1 F●●●: 3 poles. To add auxiliary contacts or other accessories, please consult our specialist catalogue "Motor starter solutions. Control and protection components".
LC1 BL●●: 3 poles. To add auxiliary contacts or other accessories, please consult our specialist catalogue "Motor starter solutions. Control and protection components".
(4) Replace ●● with the control circuit voltage reference indicated in the table below:

	Volts ∿	24	48	110	220	230	240
LC1 F	40…400 Hz (LX1 coil)	–	**E7**	**F7**	**M7**	**P7**	**U7**
LC1 BL	50…400 Hz (WB1 coil)	–	–	**F**	**M**	**P**	**U**

For other voltages available between 24 V and 660 V, or a DC control circuit, please consult your Regional Sales Office.

Mounting recommendations

Depending on the conditions in which the drive is to be used, its installation will require certain precautions and the use of appropriate accessories.
Install the unit vertically:
- Avoid placing it close to heating elements
- Leave sufficient free space to ensure that the air required for cooling purposes can circulate from the bottom to the top of the unit.

ATV 71H●●●M3, ATV 71HD11M3X...HD45M3X, ATV 71H075N4...HD75N4, ATV 71HU22Y...HD90Y, ATV 71P075N4Z...PD11N4Z

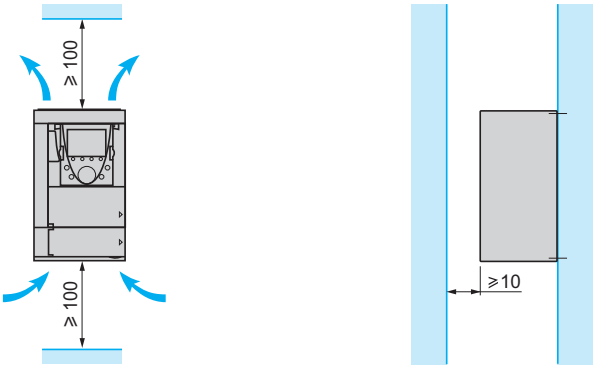

Mounting types

■ **Type A mounting**

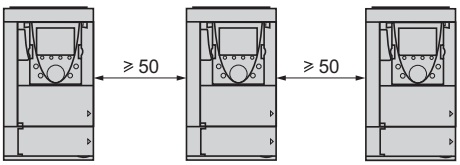

■ **Type B mounting**

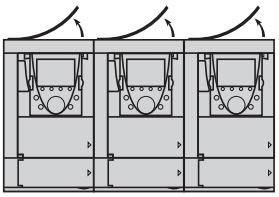

■ **Type C mounting**

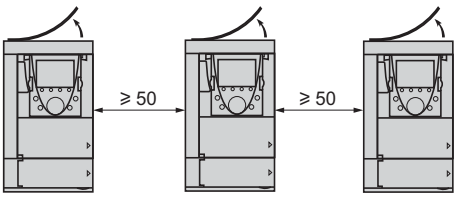

522085

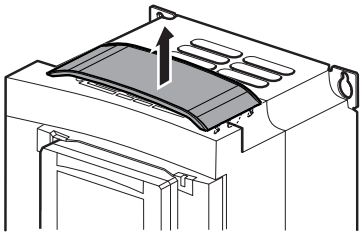

Removing the protective blanking cover for:
ATV 71H●●●M3, ATV 71HD11M3X, HD15M3X, ATV 71H075N4...HD18N4, ATV 71P075N4Z...PD11N4Z

564510

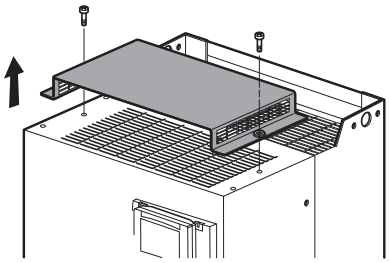

Removing the protective blanking cover for:
ATV 71HD18M3X...HD45M3X, ATV 71HD22N4...HD75N4, ATV 71HU22Y...HD90Y

By removing the protective blanking cover from the top of the drive, the degree of protection for the drive becomes IP 20.
The protective blanking cover may vary according to the drive model, see drawings opposite.

Note: *The protective blanking cover must be removed from ATV 71P●●●N4Z drives when they are mounted in a dust and damp proof enclosure.*

Mounting recommendations (continued)

Derating curves for ATV 71H●●●M3, ATV 71HD11M3X...HD45M3X, ATV 71H075N4...HD75N4, ATV 71P075N4Z...PD11N4Z

The derating curves for the drive nominal current (In) depend on the temperature, the switching frequency and the mounting type.

For intermediate temperatures (e.g. 55°C), interpolate between 2 curves.

ATV 71H037M3...HD15M3X, ATV 71H075N4...HD18N4, ATV 71P075N4Z...PD11N4Z

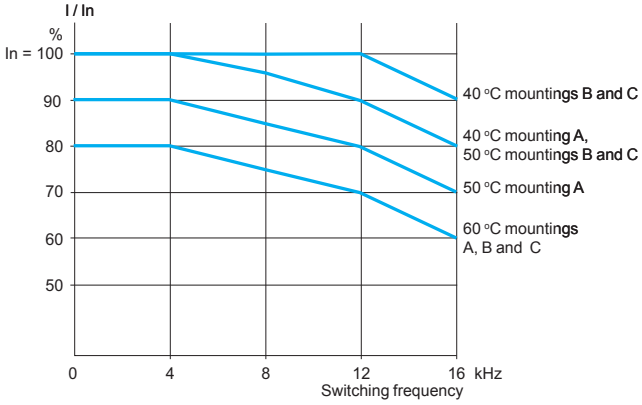

ATV 71HD22N4, HD30N4 *(1)*

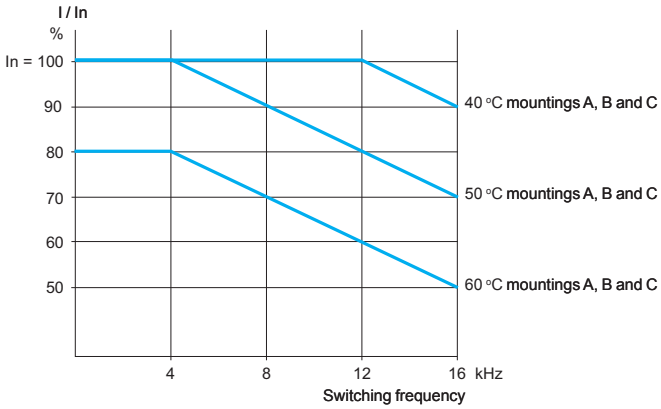

ATV 71HD18M3X...HD45M3X, ATV 71HD37N4...HD75N4 *(1)*

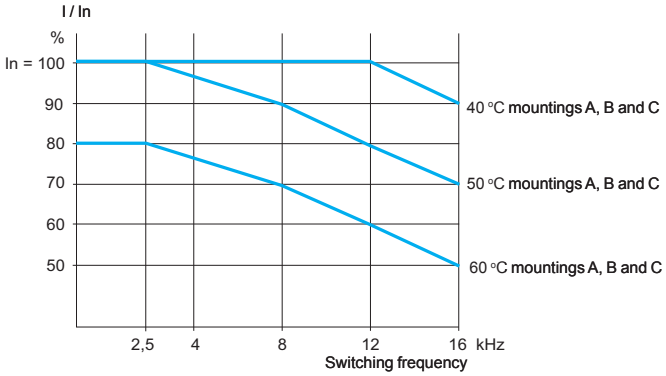

(1) Above 50°C, ATV 71HD18M3X…HD45M3X and ATV 71HD22N4…HD75N4 drives should be fitted with a control card fan kit. See page 27.

Mounting recommendations (continued)

Derating curves for ATV 71HU22Y…HD90Y

ATV 71HU22Y…HD15Y *(1)*

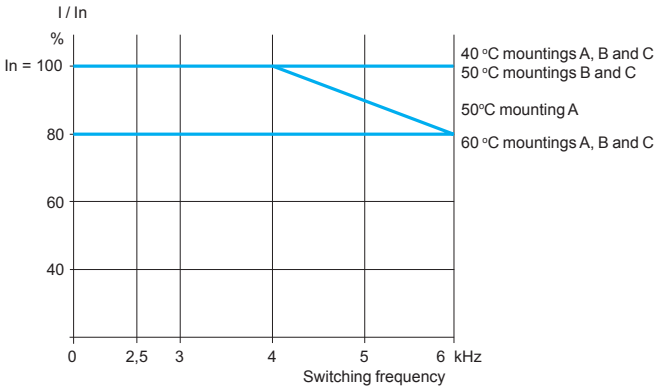

ATV 71HD18Y…HD30Y *(1)*

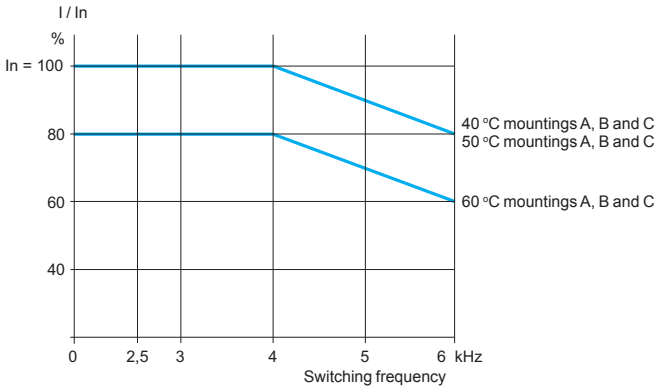

ATV 71HD37Y…HD55Y *(1)*

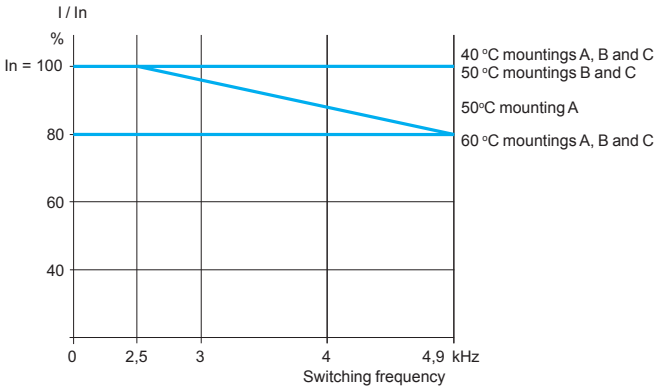

ATV 71HD75Y, ATV 71HD90Y *(1)*

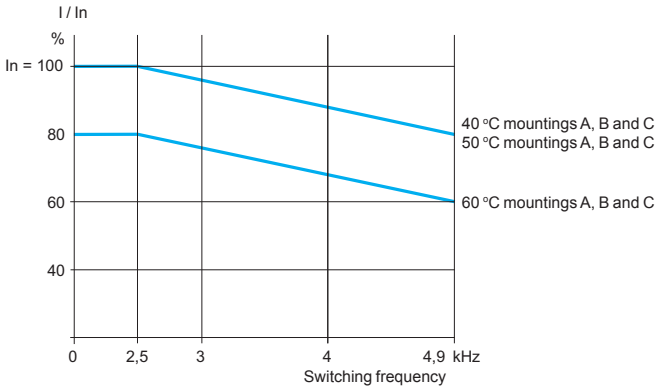

(1) Above 50°C, ATV 71HU22Y…HD90Y drives should be fitted with a control card fan kit. See page 27.

Mounting recommendations (continued)

ATV 71HD55M3X, HD75M3X, ATV 71HD90N4…HC50N4, ATV 71HC11Y…HC63Y

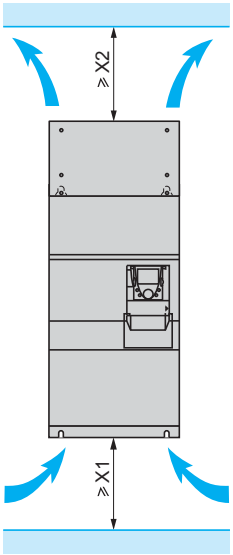

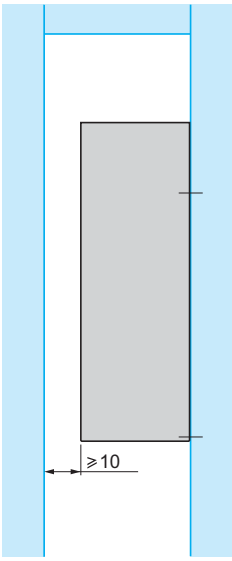

ATV 71H	X1	X2
D55M3X, D75M3X D90N4	100	100
C11N4…C16N4, C11Y…C16Y	150	150
C20N4…C28N4, C20Y…C31Y	150	200
C31N4, C40N4	250	300
C50N4, C40Y…C63Y	250	400

These drives can be mounted side by side, observing the following mounting recommendations:

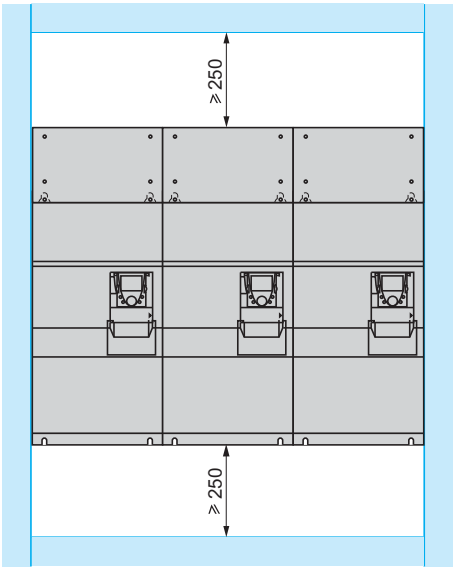

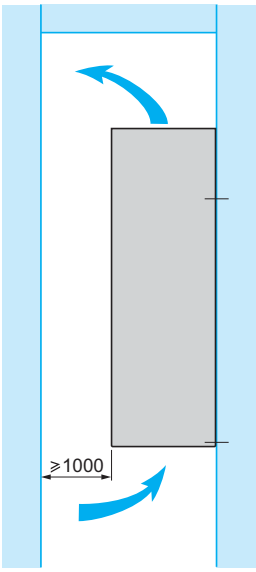

Mounting recommendations (continued)

Derating curves for ATV 71HD55MX, HD75MX, ATV 71HD90N4...HC13N4

The derating curves for the drive nominal current (In) depend on the temperature, the switching frequency and the mounting type.

For intermediate temperatures (e.g. 55°C), interpolate between 2 curves.

ATV 71HD55M3X, HD75M3X

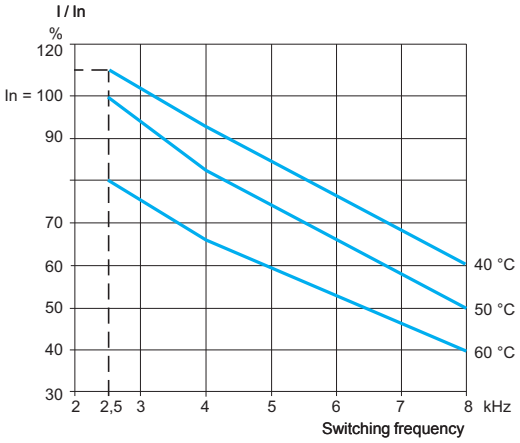

ATV 71HD90N4

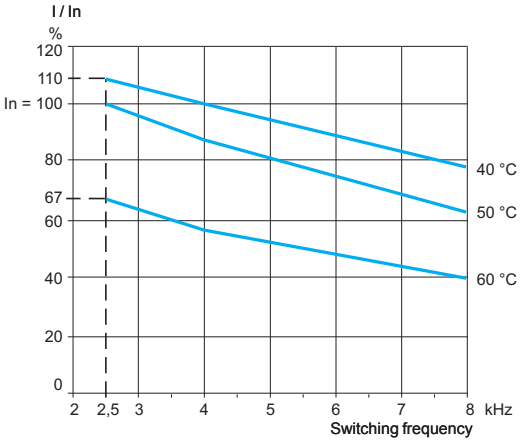

ATV 71HC11N4

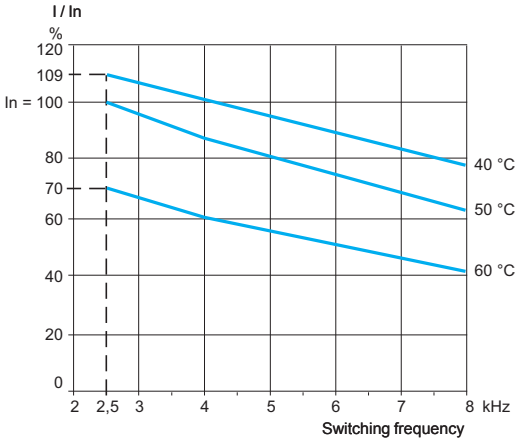

ATV 71HC13N4

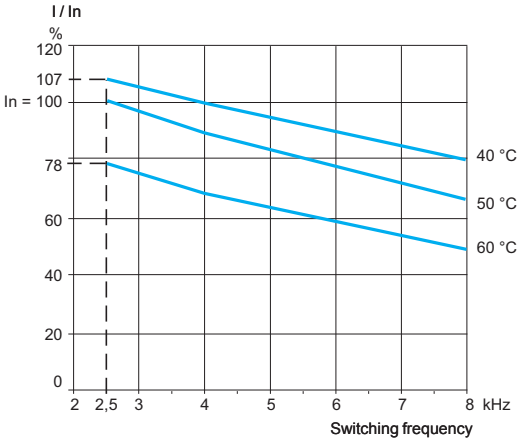

Mounting recommendations (continued)

Derating curves for ATV 71HC16N4...HC31N4

ATV 71HC16N4

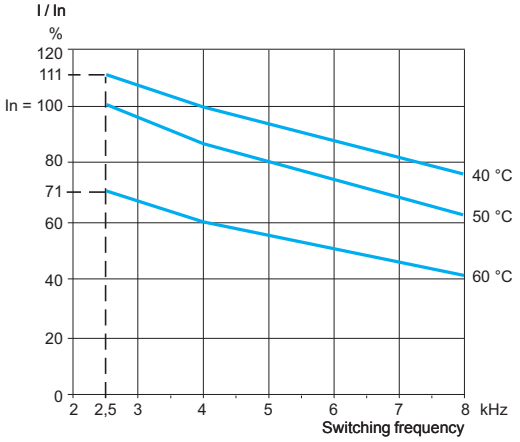

ATV 71HC20N4

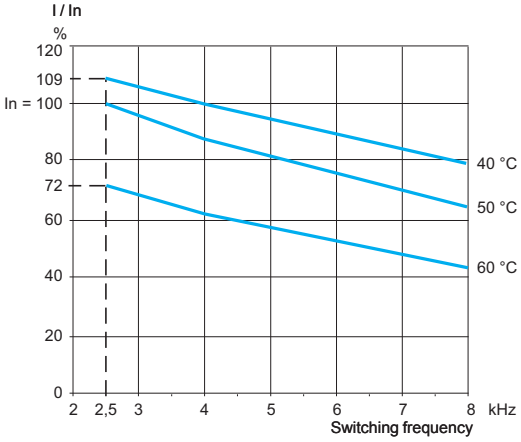

ATV 71HC25N4 combined with a 220 kW motor

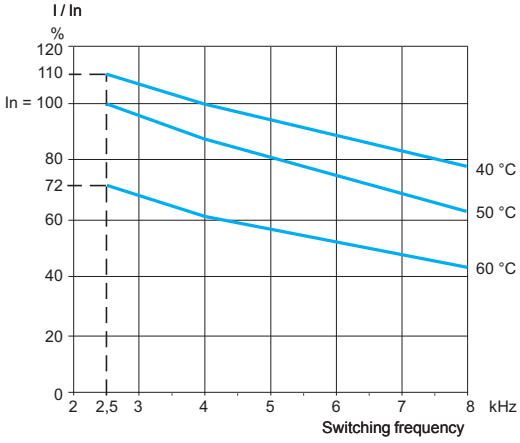

ATV 71HC25N4 combined with a 250 kW motor

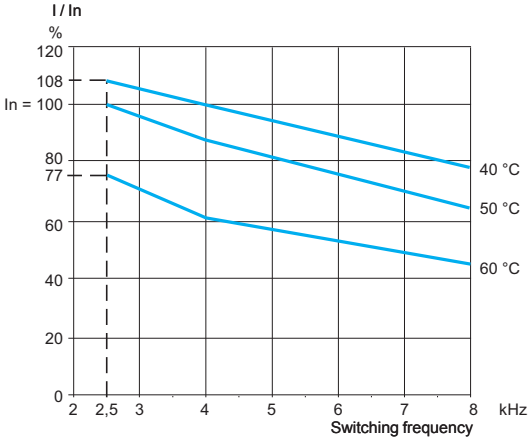

ATV 71HC28N4

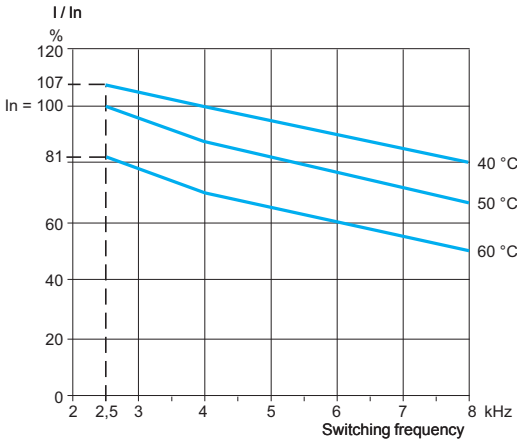

ATV 71HC31N4

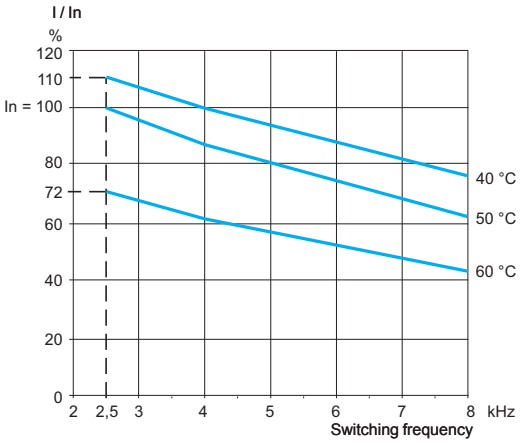

Mounting recommendations (continued)

Derating curves for ATV 71HC40N4, HC50N4

ATV 71HC40N4 combined with a 355 kW motor

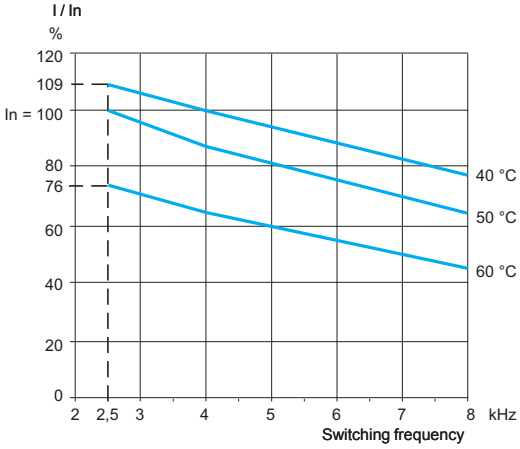

ATV 71HC40N4 combined with a 400 kW motor

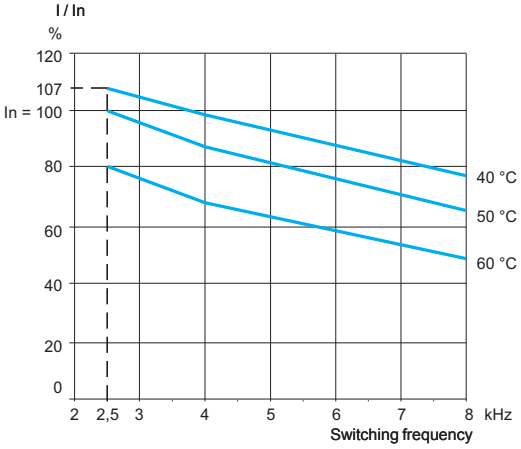

ATV 71HC50N4

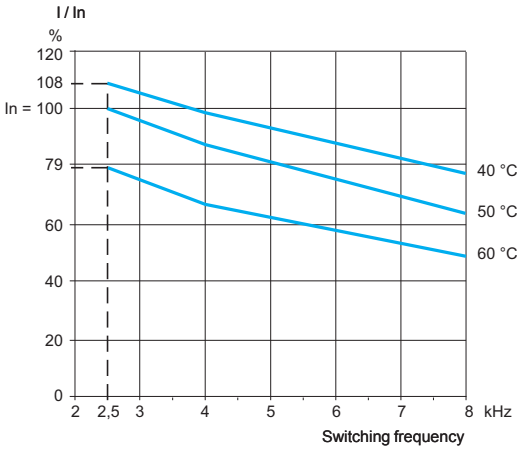

Mounting recommendations (continued)

Derating curves for ATV 71HC11Y…HC31Y

ATV 71HC11Y

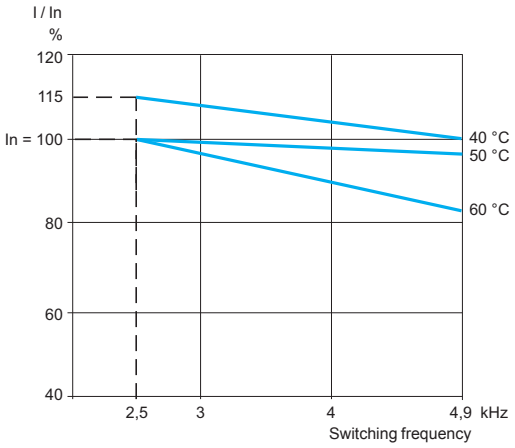

ATV 71HC13Y

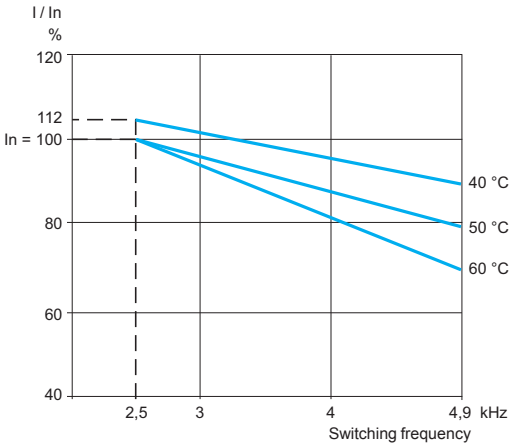

ATV 71HC16Y

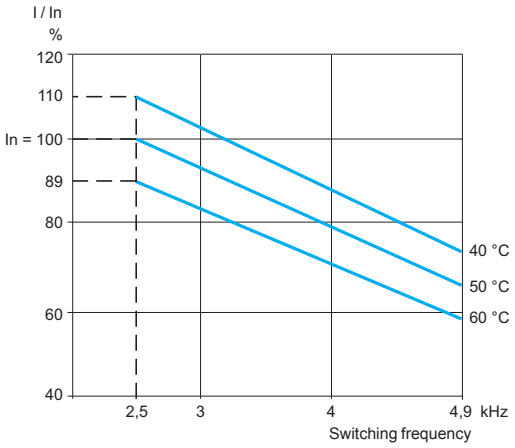

ATV 71HC20Y

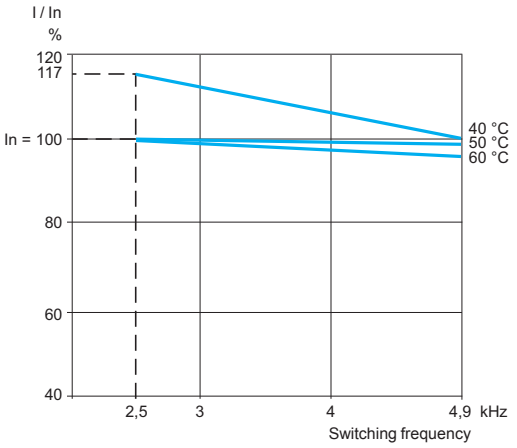

ATV 71HC25Y

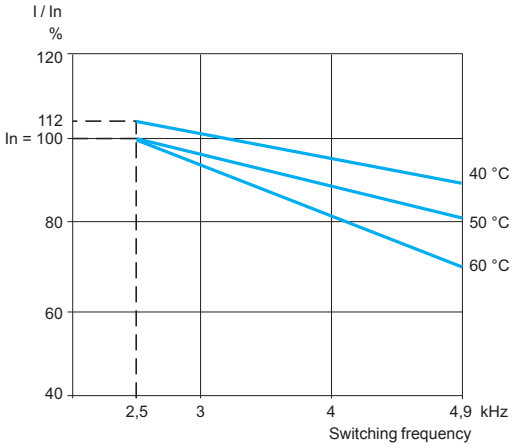

ATV 71HC31Y

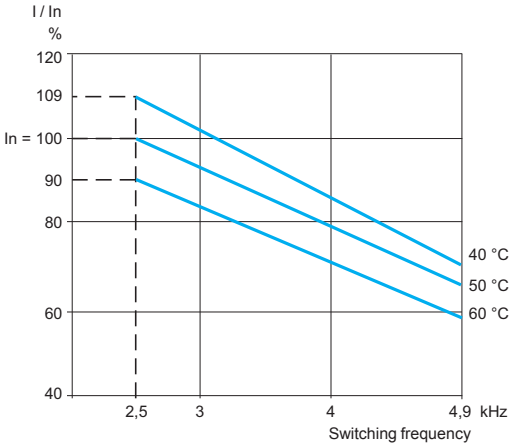

Mounting recommendations (continued)

Derating curves for ATV 71HC40Y…HC63Y

ATV 71HC40Y

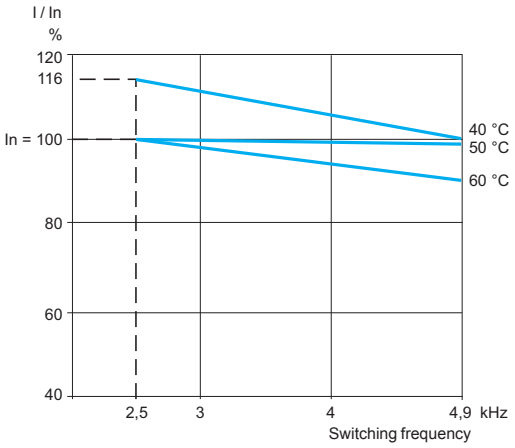

ATV 71HC50Y

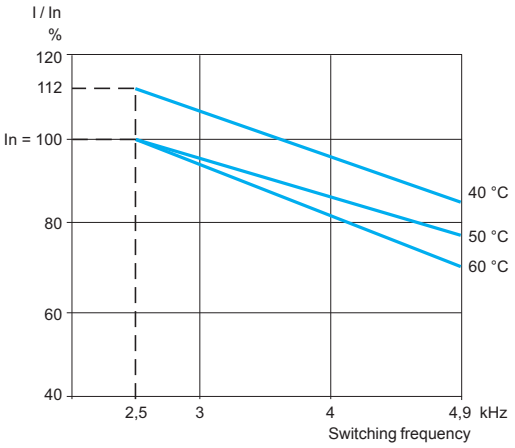

ATV 71HC63Y

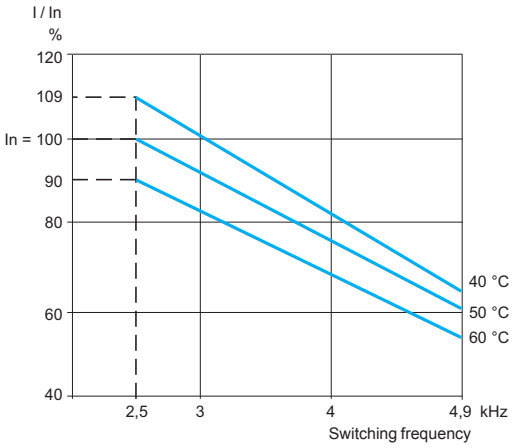

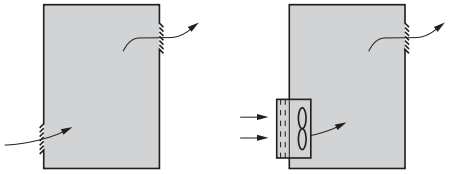

Specific recommendations for mounting ATV 71H●●●M3, ATV 71H●●●M3X, ATV 71H●●●N4 and ATV 71H●●●Y drives in enclosures

Follow the mounting recommendations described on pages 250 to 258.
To ensure proper air circulation in the drive:
- Fit ventilation grilles
- Ensure that there is sufficient ventilation. If there is not, install a forced ventilation unit with a filter. The openings and/or fans must provide a flow rate at least equal to that of the drive fans, see page 261)
- Use special filters with IP 54 protection
- Remove the blanking cover from the top of the drive, see page 250

Power dissipated inside the enclosure

For drives	Dissipated power *(1)*	
	Mounted in the enclosure (power section inside the enclosure)	**Dust and damp proof flush-mounted** (power section outside the enclosure)
	W	**W**
Three-phase supply voltage: 200…240 V 50/60 Hz		
ATV 71H037M3	46	25
ATV 71H075M3	66	27
ATV 71HU15M3	101	30
ATV 71HU22M3	122	38
ATV 71HU30M3	154	38
ATV 71HU40M3	191	41
ATV 71HU55M3	293	59
ATV 71HU75M3	363	67
ATV 71HD11M3X	566	80
ATV 71HD15M3X	620	84
ATV 71HD18M3X	657	114
ATV 71HD22M3X	766	124
ATV 71HD30M3X	980	144
ATV 71HD37M3X	1154	161
ATV 71HD45M3X	1366	180
ATV 71HD55M3X	1715	154
ATV 71HD75M3X	2204	154
Three-phase supply voltage: 380…480 V 50/60 Hz		
ATV 71H075N4	44	26
ATV 71HU15N4	64	28
ATV 71HU22N4	87	30
ATV 71HU30N4	114	35
ATV 71HU40N4	144	40
ATV 71HU55N4	185	50
ATV 71HU75N4	217	55
ATV 71HD11N4	320	65
ATV 71HD15N4	392	85
ATV 71HD18N4	486	86
ATV 71HD22N4	574	110
ATV 71HD30N4	799	133
ATV 71HD37N4	861	137
ATV 71HD45N4	1060	165
ATV 71HD55N4	1210	178
ATV 71HD75N4	1720	225
ATV 71HD90N4	2403	237
ATV 71HC11N4	2726	261
ATV 71HC13N4	3191	296
ATV 71HC16N4	3812	350
ATV 71HC20N4	4930	493
ATV 71HC25N4	5873	586
ATV 71HC28N4	6829	658
ATV 71HC31N4	7454	772
ATV 71HC40N4	9291	935
ATV 71HC50N4	11345	1116

(1) This value is given for operation at nominal load and for a switching frequency of 2.5 or 4 kHz depending on the rating.
Add 7 W to this value for each additional option card.

Power dissipated inside the enclosure (continued)

For drives	Dissipated power *(1)*	
	Mounted in the enclosure (power section inside the enclosure)	**Dust and damp proof flush-mounted** (power section outside the enclosure)
	W	W
Three-phase supply voltage: 500…690 V 50/60 Hz		
ATV 71HU22Y	111	71
ATV 71HU30Y	119	71
ATV 71HU40Y	136	73
ATV 71HU55Y	158	75
ATV 71HU75Y	182	77
ATV 71HD11Y	227	81
ATV 71HD15Y	300	87
ATV 71HD18Y	386	94
ATV 71HD22Y	463	100
ATV 71HD30Y	556	108
ATV 71HD37Y	716	120
ATV 71HD45Y	911	133
ATV 71HD55Y	1087	144
ATV 71HD75Y	1545	158
ATV 71HD90Y	1947	179
ATV 71HC11Y	2320	169
ATV 71HC13Y	2739	179
ATV 71HC16Y	3271	196
ATV 71HC20Y	4005	267
ATV 71HC25Y	5142	311
ATV 71HC31Y	6293	363
ATV 71HC40Y	7596	471
ATV 71HC50Y	9614	554
ATV 71HC63Y	11921	658

(1) This value is given for operation at nominal load and for a switching frequency of 2.5 or 4 kHz depending on the rating.
Add 7 W to this value for each additional option card.

Fan flow rate depending on the drive rating

For drives	Flow rate m³/hour
ATV 71H037M3...HU15M3	17
ATV 71HU22M3...HU40M3	56
ATV 71HU55M3	112
ATV 71HU75M3	163
ATV 71HD11M3X, HD15M3X	252
ATV 71HD18M3X, HD22M3X	203
ATV 71HD30M3X...HD45M3X	406
ATV 71HD55M3X	402
ATV 71HD75M3X	774
ATV 71H075N4...HU22N4	17
ATV 71HU30N4, HU40N4	56
ATV 71HU55N4, HU75N4	112
ATV 71HD11N4	163
ATV 71HD15N4, HD18N4	252
ATV 71HD22N4 ... HD37N4	203
ATV 71HD45N4...HD75N4	406
ATV 71HD90N4	402
ATV 71HC11N4	774
ATV 71HC13N4	745
ATV 71HC16N4	860
ATV 71HC20N4...HC28N4	1260
ATV 71HC31N4, HC40N4	2100
ATV 71HC50N4	2400
ATV 71HU22Y...HD30Y	330
ATV 71HD37Y...HD90Y	406
ATV 71HC11Y...HC16Y	600
ATV 71HC20Y...HC31Y	1200
ATV 71HC40Y...HC63Y	2400

Dust and damp proof metal enclosure (IP 54 degree of protection)

The drive must be mounted in a dust and damp proof enclosure in certain environmental conditions: dust, corrosive gases, high humidity with risk of condensation and dripping water, splashing liquid, etc.
This enables the drive to be used in an enclosure where the maximum internal temperature reaches 50°C.

Calculating the dimensions of the enclosure

Maximum thermal resistance Rth (°C/W)

$$Rth = \frac{\theta - \theta e}{P}$$

θ = maximum temperature inside enclosure in °C
θe = maximum external temperature in °C
P = total power dissipated in the enclosure in W

Power dissipated by drive: see page 259 (mounting in an enclosure or flush-mounting in an enclosure).
Add the power dissipated by the other equipment components.

Useful heat dissipation surface of enclosure S (m²)

(sides + top + front panel if wall-mounted)

$$S = \frac{K}{Rth}$$

K = thermal resistance per m² of the enclosure

For a metal enclosure:
- K = 0.12 with internal fan
- K = 0.15 without fan

Note: *Do not use insulated enclosures, as they have a poor level of conductivity.*

Specific recommendations for mounting drives on base plates in a dust and damp proof enclosure or on a machine frame

Follow the mounting recommendations described on pages 250 and 251.

Power dissipated inside the enclosure

For drives	Dissipated power *(1)*	
	Mounted in the enclosure with no fan *(2)*	Mounted in the enclosure with a fan
	W	W
Three-phase supply voltage: 380…480 V 50/60 Hz		
ATV 71P075N4Z	26	39
ATV 71PU15N4Z	28	41
ATV 71PU22N4Z	30	43
ATV 71PU30N4Z	35	65
ATV 71PU40N4Z	37	67
ATV 71PU55N4Z	40	95
ATV 71PU75N4Z	40	95
ATV 71PD11N4Z	50	115

Specific recommendations for mounting in a dust and damp proof enclosure *(3)*

Drives on base plates can be mounted in a dust and damp proof enclosure in accordance with the following specific recommendations:
- External ambient temperature (heatsink side, see page 31): - 10…+ 40°C
- Temperature inside the enclosure: + 50°C for a switching frequency of 4 kHz, or + 40°C for a switching frequency of 12 kHz
- Remove the blanking cover from the top of the drive, see page 250.

Specific recommendations for mounting on a machine frame *(3)*

Drives on base plates can also be mounted on a machine frame in accordance with the following specific recommendations:
- Ambient temperature: - 10…+ 40°C
- Thermal resistance (Rth) of the frame less than or equal to the thermal resistance of the kit for mounting in a dust and damp proof enclosure VW3 A9 80●, see page 31
- Aluminium machine frame; mounting on iron frame not recommended
- Support area machined on the frame, to give a surface smoothness of 100 µm and unevenness of 3.2 µm maximum
- Drive mounted in the centre of the support with a minimum thickness and a minimum cooling area, exposed to the open air (see table below)

For drives	Switching frequency	Minimum area		Minimum thickness
		With DC choke	With fan	
		m²	m²	mm
ATV 71P075N4Z …PU22N4Z	4 kHz	–	–	20
	12 kHz	0.60	0.70	20
ATV 71PU30N4Z, PU40N4Z	4 kHz	1.50	–	20
	12 kHz	2.00	1.50	20
ATV 71PU55N4Z, PU75N4Z	4 kHz	3.50	3.00	20
	12 kHz	5.40	5.00	20

(1) This value is given for operation at nominal load and for a switching frequency of 4 Hz. Add 7 W to this value for each additional option card.
(2) Add the dissipation of the DC choke, see page 155.
(3) For ATV 71PD11N4Z drive, please contact your Regional Sales Office.

Definition of thermal resistance

Thermal resistance Rth of the frame or the cold plate (°C/W)

For drives	Maximum Rth (°C/W)
ATV 71P075N4Z	0.65
ATV 71PU15N4Z	0.36
ATV 71PU22N4Z	0.24
ATV 71PU30N4Z	0.21
ATV 71PU40N4Z	0.15
ATV 71PU55N4Z	0.03
ATV 71PU75N4Z	0.02
ATV 71PD11N4Z	0.015

Mounting several drives on the same frame or the same cold plate

Determine the equivalent thermal resistance (Rthe) for all the drives:

$$\frac{1}{Rthe} = \frac{1}{Rth1} + \frac{1}{Rth2} + \frac{1}{Rth3} + \ldots + \frac{1}{Rthn}$$

Calculation example with three drives of 0.75 kW, 1.5 kW and 2.2 kW

$$\frac{1}{Rth} = \frac{1}{0.65} + \frac{1}{0.36} + \frac{1}{0.24} \quad \text{i.e. } Rth = 0.12°C/W$$

Mounting recommendations

Depending on the conditions in which the drive is to be used, its installation will require certain precautions and the use of appropriate accessories.
Install the unit vertically:
- Avoid placing it close to heating elements
- Leave sufficient free space to ensure that the air required for cooling purposes can circulate from the bottom to the top of the unit.

ATV 71W●●●N4

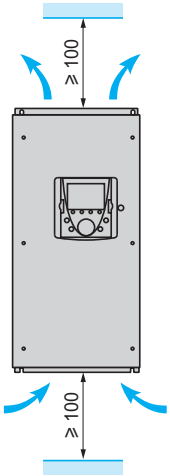

Mounting

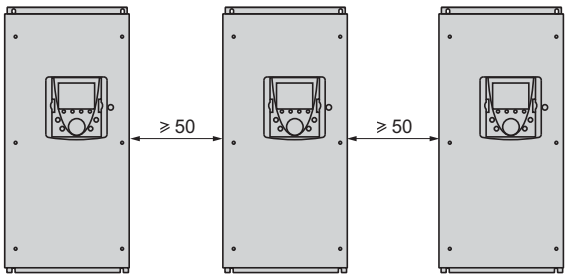

Mounting recommendations (continued)

Derating curves for ATV 71W075N4...WD75N4

ATV 71W075N4...WD18N4

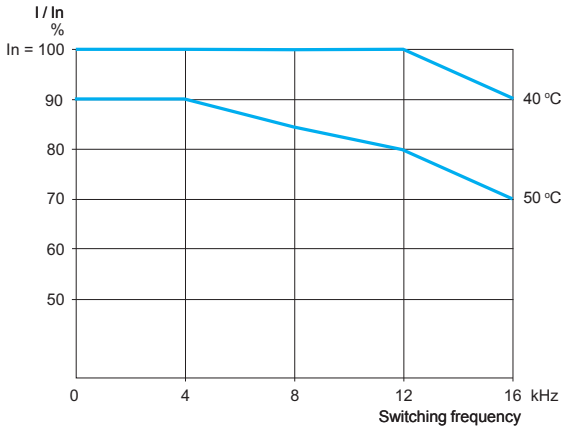

ATV 71WD22N4, WD30N4

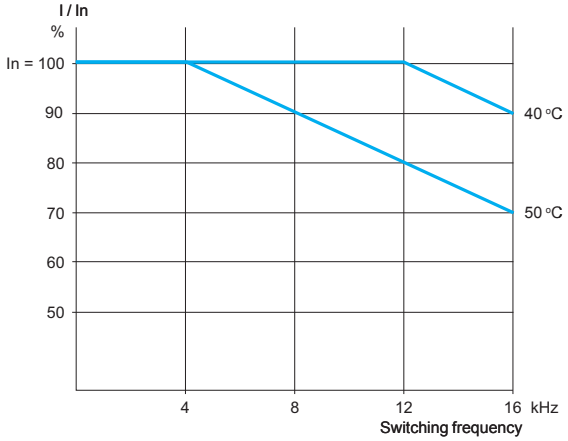

ATV 71WD37N4...WD75N4

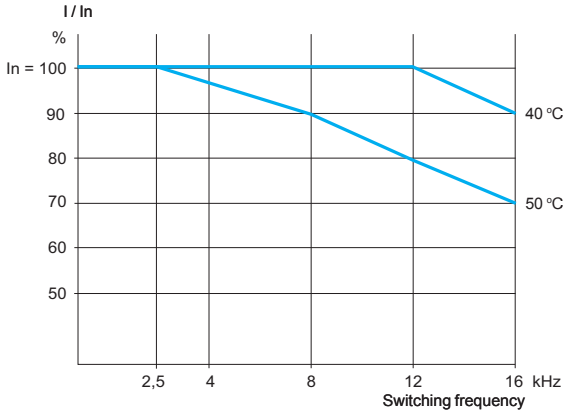

Variable speed drives

Altivar 71

Compatible combinations of functions and applications

Applications	Hoisting	Lift	Material handling
Machines	Cranes, overhead cranes, gantries (vertical hoisting, translation, slewing), lifting platforms	Retrofit lifts up to 1.2 ms	Palletizers/depalletizers, carton packers, labelling machines, conveyors, roller tables
Motor control functions			
Flux vector control with and without sensor	■	■	■
2-point vector control	■		
Synchronous motor without speed feedback			
Synchronous motor with speed feedback		■	■
ENA system			
Voltage/frequency ratio			■
Output frequency 1600 Hz			
Motor overvoltage limiting	■	■	■
Application functions			
Differential bipolar reference	■		■
Reference delinearization (magnifying glass effect)	■		■
Frequency control input			
Operations on references (summing, subtraction, multiplication)			■
Brake control	■	■	■
Brake feedback via contact	■		
High-speed hoisting	■		
Load measurement	■	■	
Load sharing	■		■
Slack sling	■		
Limit switch management	■	■	■
S ramp	■	■	■
Current limiting			
Output contactor command		■	
Integrity check of output contactor		■	
Rescue following power failure		■	
Stop on thermal alarm		■	
Torque control			■
Torque limit			■
Motor fluxing	■		■
Parameter set switching	■	■	■
Motor switching	■		■
Position control via limit switches			■
Uncontrolled output cut			■
Torque or current limit detection			■
PID regulator			
Auto/man.			
Reference saving			
+/- speed, single-action button			
+/- speed, double-action button	■		
+/- speed around a reference			
Traverse control			
Automatic catching of a spinning load with speed detection (catch on the fly)			
Undervoltage management			
Fastest possible stop			

■ **Frequent or necessary use**

(For other functions that can be used for all applications, see pages 278 to 299)

Packing	Textiles	Wood	High inertia	Process
Palletizers/depalletizers, carton packers, labelling machines	Weaving looms, carding frames, washing machines, spinners, drawing frames	Automatic lathes, saws, milling	Centrifuges, mixers, unbalanced machines (beam pumps, presses)	Sectional production lines (speed < 500 m/min) Example: building materials
				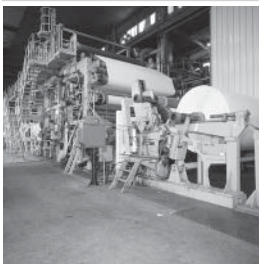
■	■	■	■	■
	■			
	■			
	■			■
			■	
		■	■	
	■	■		
■	■	■	■	■
■				
	■			■
■	■			■
	■	■	■	
	■			■
	■		■	■
■				
■	■	■	■	■
■				
■				
				■
				■
	■			■
	■			■
	■			■
	■			
	■	■	■	
	■	■	■	■
		■	■	

Presentation: pages 4 to 9 | Characteristics: pages 10 to 17 | References: pages 22 to 25 | Dimensions: pages 188 to 217 | Schemes: pages 218 to 241

Summary of functions

Remote graphic display terminal functions

Description	page 270
Navigation	page 271
Password	page 271

Integrated 7-segment display terminal

Presentation	page 272

Start-up

Simply Start menu	page 272
Programming using macro-configurations	page 273
MONITORING menu	page 274

Configuration and settings

Presentation	page 274

Operation

Presentation	page 274

Maintenance, diagnostics

Response to faults or alarms	page 275
Fault log and help	page 275
IDENTIFICATION menu	page 275
Test functions	page 275
Oscilloscope function	page 275

Controlling the drive

Via the drive I/O	page 276
Via the remote graphic display terminal	page 276
Via a communication network	page 277

Application functions

2-wire control	
- State detection	page 278
- Transition detection	page 278
- Forward operation as priority	page 278
3-wire control	page 278
Phase rotation	page 278
Ramps	
- Time	page 278
- Profile (linear, S, U or customized)	page 279
- Switching	page 279
- Automatic adaptation	page 279
Preset speeds	page 280
Jog operation	page 280
Limiting low speed operating time	page 280
Motor control type	
- Flux vector control with sensor	page 281
- Sensorless flux vector control	page 281
- 2-point vector Control	page 281
- Voltage/frequency ratio	page 281
- ENA system	page 281
- Synchronous motor	page 281
Using an incremental encoder	page 282
Encoder tests	page 282
Limiting motor overvoltage	page 282
Auto-tuning	page 282
Switching frequency, noise reduction	page 282
Motor fluxing	page 282
Brake control	
- Movement type	page 283
- Brake feedback via contact	page 283
- Brake release pulse	page 283
- Brake engage on reversal of operating direction	page 283
- Brake engage request time delay	page 283
- Automatic DC injection	page 283

Summary of functions (continued)

Application functions (continued)

Limit switch management	page 283
Slack sling	page 283
High-speed hoisting	page 284
External weight measurement	page 285
Load sharing	page 285
Output contactor	
- Control	page 285
- Integrity check	page 285
Stop on thermal alarm	page 285
Evacuation following power failure	page 285
Uncontrolled output cut	page 286
+/- speed	
- Single action buttons	page 286
- Double action buttons	page 286
- Reference saving	page 287
- Around a reference	page 287
Spooling	
- Traverse control	page 287
- Counter wobble	page 288
Automatic catching of a spinning load with speed detection	page 288
Undervoltage management	page 289
Braking balance	page 289
Braking resistor thermal protection	page 289
Parameter set switching	page 289
Motor or configuration switching	page 289
Positioning on limit switches	page 290
Short and long cam operation	page 290
Reference switching	page 291
Operations on the references	
- Summing inputs	page 291
- Subtraction inputs	page 291
- Multiplication inputs	page 291
PID regulator	
- Preset PID references	page 292
- Predictive speed reference	page 292
- Auto/man	page 292
Torque control	page 293
Torque limit	page 294
Torque or current limit detection	page 294
Current limit	page 294
Reference saving	page 295
Stop types	
- Freewheel stop	page 295
- Fast stop	page 295
- Fastest possible stop	page 295
- DC injection stop	page 295
Motor thermal protection	page 296
Drive thermal protection	page 296
IGBT thermal protection	page 296
Configuring the drive's fault response	page 297
Resetting resettable faults	page 297
General reset (disables all faults)	page 297
Automatic restart	page 298
PTC probe protection	page 298
IGBT testing	page 298
Resetting operating time to zero	page 298
External fault	page 298
Line contactor control	page 299
Forced local mode	page 299

Remote graphic display terminal functions

This display terminal is attached to the front of the drive. It includes the integrated 7-segment display terminal for drives supplied without a graphic display terminal or for ATV 71HU22Y…HC63Y drives.

■ **Description**

□ **Description of graphic display terminal**

1 Graphic display unit:
- 8 lines, 240 x 160 pixels
- large digit display that can be read from 5 m away
- bar chart display

2 Assignable function keys F1, F2, F3, F4:
- dialogue functions: direct access, help screens, navigation
- application functions: Local/Remote, preset speed

3 STOP/RESET key: local control of motor stopping/fault clearing

4 RUN key: local control of motor operation

5 Navigation button:
- Press to save the current value (ENT)
- Turn ± to increase or decrease the value, go to the next or previous line

6 FWD/REV key: reverses the direction of rotation of the motor

7 ESC key: aborts a value, parameter or menu to return to the previous option

***Note:** keys 3, 4 and 6 can be used to control the drive directly.*

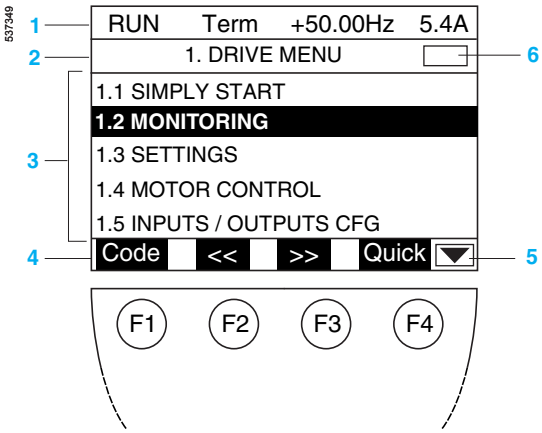

□ **Description of graphic display unit**

1 Display line. Its content can be configured; the factory settings show:
- the drive status (e.g. RUN)
- the active control channel (e.g. “Term”: terminals)
- the frequency reference
- the current in the motor

2 Menu line. Indicates the current menu or submenu.

3 Area displaying menus, submenus, parameters, values, bar charts, in the form of a scrolling window, with a maximum of 5 lines.
The line or value selected using the navigation button is displayed in reverse video (see example opposite).

4 Section displaying the functions assigned to the F1 to F4 keys and aligned with them, for example:
- >>: Horizontal scrolling to the right, or proceeding to the next menu or submenu, or, in the case of a value, decreasing the value, displayed in reverse video (see example opposite).
- <<: Horizontal scrolling to the left, or proceeding to the next menu or submenu, or, in the case of a value, increasing the value, displayed in reverse video
- Quick: Rapid access to a parameter from any screen when the Quick function is displayed above the F4 key
- HELP: Contextual help
- Code: Displays the selected parameter code
- Other functions (application functions) can be assigned to these keys via the 1.6 COMMAND menu.

5 □ : Means that this display window does not scroll further down.
▼ : Means that this display window can scroll further down.

6 ▲ : Means that this display window can scroll further up.
□ : Means that this display window does not scroll further up.

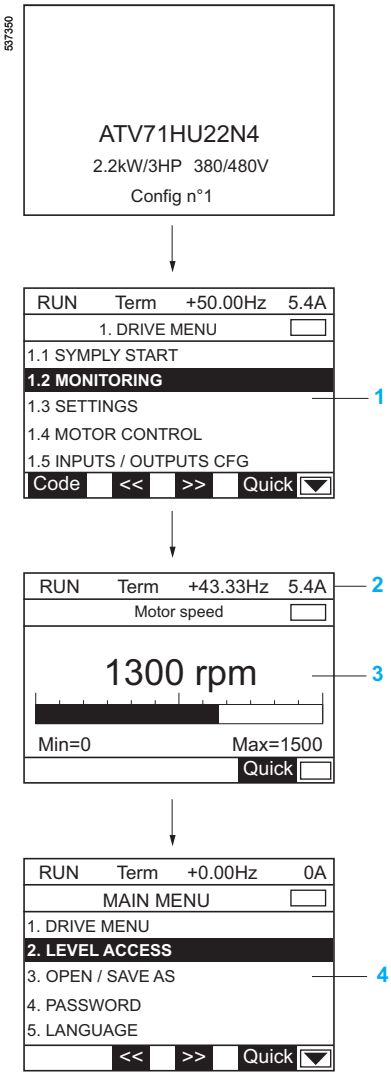

Remote graphic display terminal functions (continued)

■ **Navigation: accessing menus and parameters**

Structure of main menus:

1 Drive menu:

Menu type	Function
1.1 SIMPLY START	Simplified menu for a quick start
1.2 MONITORING	Displays current values for motor, inputs/outputs and communication (command words, status words, etc.)
1.3 SETTINGS	Accesses the adjustment parameters, which can be modified during operation
1.4 MOTOR CONTROL	Accesses the motor parameters, including adjustment of motor control profiles
1.5 INPUTS/OUTPUTS CFG	Configures the I/O and transforms signals
1.6 COMMAND	Configures the command and reference channels
1.7 APPLICATION FUNCT.	Configures the application functions (preset speeds, PID regulator, etc.)
1.8 FAULT MANAGEMENT	Configures the fault management process
1.9 COMMUNICATION	Configures the communication networks
1.10 DIAGNOSTICS	Provides diagnostics for motor and drive, integrated test procedures, fault log
1.11 IDENTIFICATION	Identifies the drive and the internal options
1.12 FACTORY SETTINGS	Restores factory settings (completely or by parameter group)
1.13 USER MENU	Accesses the parameters selected by the user
1.14 PROGRAMMABLE CARD	Accesses the parameters for the Controller Inside programmable card

2 Display line

3 Display screen: Displays values in the form of bar charts or digital values, depending on the extent of customization.

4 Main menu:

Menu type	Function
1. DRIVE MENU	See above (1 Drive menu)
2. ACCESS LEVEL	4 access levels: basic, limited, advanced, expert
3. OPEN/SAVE AS	Transfers files between the graphic display terminal and the drive
4. PASSWORD	Provides password protection for the configuration
5. LANGUAGE	Choice of 6 languages available (English, German, Spanish, French, Italian and Chinese)
6. MONITORING CONFIG.	Customizes the display line 2 and the display screen 3 (bar charts, digital values)
7. DISPLAY CONFIG.	Configures how parameters are displayed: customization, selection for User menu, visibility, accessibility

■ **Password**

Altivar 71 drives allow individual parameters to be selected for password protection. Rights can be set for save operations and for loading the configuration.

Integrated 7-segment display terminal

ATV 71●●●●M3, ATV 71HD11M3X, HD15M3X,
ATV 71H075N4…HD75N4 drives can be supplied without a graphic display terminal. In this case, they are equipped with an integrated 7-segment display terminal.

ATV 71P●●●N4Z drives are equipped as standard with an integrated 7-segment display terminal.

ATV 71HU22Y…HC63Y drives are equipped as standard with an integrated 7-segment display terminal as well as the remote graphic display terminal.

The integrated 7-segment display terminal can be used to:
- □ Display status and faults
- □ Access and modify parameters

Start-up

The Altivar 71 drive is supplied ready for use for most applications.
When the drive is switched on, the menus for setting the language and access level appear automatically.

537352

RUN	Term	+50.00Hz	5.4A
1.1 SIMPLY START			
2/3 wire control	**:**		**2 wire**
Macro-configuration	:		M. handling
Standard mot. Freq.	:		50Hz IEC
Rated motor power	:		2.2kW
Rated motor volt.	:		400V
Code	<<	>>	Quick

Simply Start menu

■ Simply Start menu

By accessing the Simply Start menu directly it is possible to:
- □ Pre-program the drive for an application:
  - Select the relevant macro-configuration
  - 2-wire/3-wire control
- □ Benefit from optimum motor performance:
  - Enter data from the motor rating plate
  - Auto-tuning
- □ Protect the motor by setting the drive's integrated electronic thermal overload relay

Start-up (continued)

■ **Programming using macro-configurations**

Programming using macro-configurations offers the choice of seven options corresponding to the various business areas and applications:

- □ Start/stop
- □ Material handling
- □ General use
- □ Hoisting
- □ Lift
- □ PID regulation
- □ Communication network connectivity
- □ Master/slave applications

Choosing one of these macro-configurations automatically assigns the functions, parameters and I/O, even in the case of option cards. Although the configuration is preset, it can still be modified, if necessary.

The Start/stop macro-configuration is set as the factory configuration.
The preset functions for each macro-configuration are given in the table below.

Type of macro-configuration		Start/stop	Material handling	General use	Hoisting	Lift (1)	PID regulation	Communication network connectivity	Master/slave application
Altivar 71 drive I/O									
AI1		Ref. channel 1	Ref. channel 1	Ref. channel 1	Ref. channel 1	Ref. channel 1	PID reference	Ref. channel 2 Ref. channel 1 by bus	Ref. channel 1
AI2		Not assigned	Ref. sum 2	Ref. sum 2	Not assigned	Not assigned	PID feedback	Not assigned	Ref. channel torque
AO1		Motor freq.	Motor freq.	Motor freq.	Motor freq.	Not assigned	Motor freq.	Motor freq.	Signed torque
2-wire	**LI1**	Forward	Forward	Forward	Forward	Forward	Forward	Forward	Forward
	LI2	Reverse	Reverse	Reverse	Reverse	Reverse	Reverse	Reverse	Reverse
	LI3	Not assigned	2 speeds preset	JOG	Fault reset	2 speeds preset	Integral reset PID	Switching ref.2	Switching torque/speed
	LI4	Not assigned	4 speeds preset	Fault reset	Fault assign. ext.	4 speeds preset	Ref. 2 PID preset	Fault reset	Fault reset
	LI5	Not assigned	8 speeds preset	Limit torque	Not assigned	Fault reset	Ref. 4 PID preset	Not assigned	Not assigned
	LI6	Not assigned	Fault reset	Not assigned	Not assigned	Not assigned	Not assigned	Not assigned	Not assigned
3-wire	**LI1**	Stop	Stop	Stop	Stop	Stop	Stop	Stop	Stop
	LI2	Not assigned	Not assigned	Not assigned	Not assigned	Forward	Not assigned	Not assigned	Not assigned
	LI3	Reverse	Reverse	Reverse	Reverse	Reverse	Reverse	Reverse	Reverse
	LI4	Not assigned	2 speeds preset	JOG	Fault reset	2 speeds preset	Integral reset PID	Switching ref.2	Switching torque/speed
	LI5	Not assigned	4 speeds preset	Fault reset	Fault assign. ext.	4 speeds preset	Ref. 2 PID preset	Fault reset	Fault reset
	LI6	Not assigned	8 speeds preset	Limit torque	Not assigned	Fault reset	Ref. 4 PID preset	Not assigned	Not assigned
R1		Faulty	Faulty	Faulty	Faulty	Faulty	Faulty	Faulty	Faulty
R2		Not assigned	Not assigned	Not assigned	Brake control	Brake control	Not assigned	Not assigned	Not assigned
I/O extension card I/O									
2-wire	**LI7**	Not assigned	Not assigned	Not assigned	Not assigned	Not assigned	Not assigned	Not assigned	Not assigned
3-wire	**LI7**	Not assigned	Not assigned	Not assigned	Not assigned	Not assigned	Not assigned	Not assigned	Not assigned
LI8 to LI14		Not assigned	Not assigned	Not assigned	Not assigned	Not assigned	Not assigned	Not assigned	Not assigned
LO1 to LO4		Not assigned	Not assigned	Not assigned	Not assigned	Not assigned	Not assigned	Not assigned	Not assigned
R3/R4		Not assigned	Not assigned	Not assigned	Not assigned	Not assigned	Not assigned	Not assigned	Not assigned
AI3, AI4		Not assigned	Not assigned	Not assigned	Not assigned	Not assigned	Not assigned	Not assigned	Not assigned
RP		Not assigned	Not assigned	Not assigned	Not assigned	Not assigned	Not assigned	Not assigned	Not assigned
AO2		Motor current	Motor current	Motor current	Motor current	Motor current	Motor current	Motor current	Motor current
AO3		Not assigned	Signed torque	Not assigned	Signed torque	Signed torque	PID output	Not assigned	Motor freq.
Graphic display terminal keys									
F1 key		Not assigned	Not assigned	Not assigned	Not assigned	Not assigned	Not assigned	Control via graphic display terminal	Not assigned
F2, F3, F4 keys		Not assigned	Not assigned	Not assigned	Not assigned	Not assigned	Not assigned	Not assigned	Not assigned

(1) The "Lift" macro-configuration is programmable only on ATV 71H●●●●●383 variable speed drives (see pages 22 and 23).

Start-up (continued)

■ **MONITORING menu**
The MONITORING menu can be used to display commands, the operation of the motor and the application via the drive, its I/O or the communication network connections.

537351

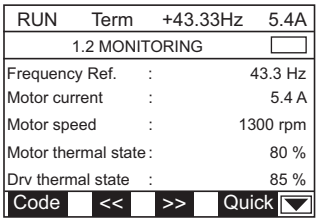

Displaying physical values

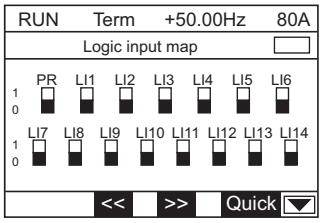

Logic input map

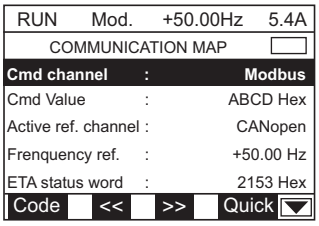

Communication map

Configuration and settings

The SETTINGS menu can be used to configure all the drive's settings.
Activating a function automatically provides access to the related settings on the same screen (the application functions are described on pages 278 to 299).

537353

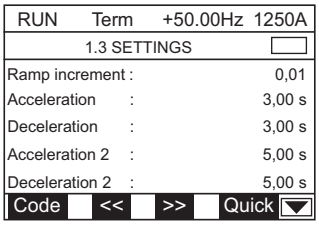

Settings screen

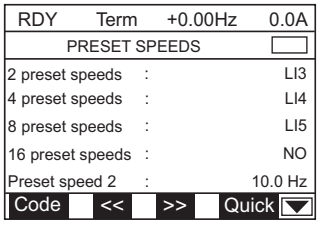

Setting a function

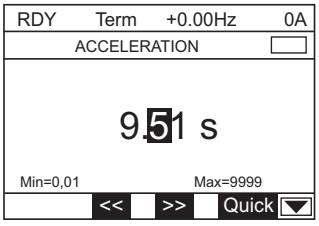

Configuring a value

Operation

The display screen appears automatically every time the drive is turned on.
There are various possibilities:
- One or two bar charts are displayed.
- One, two or five digital values are displayed.

537354

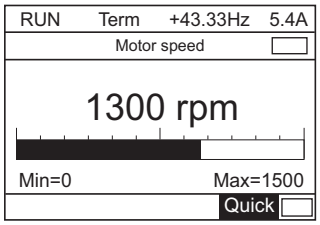

1 bar chart

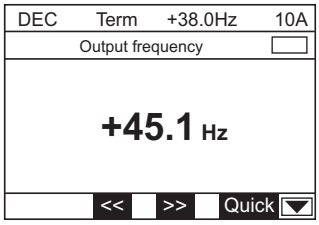

1 digital value

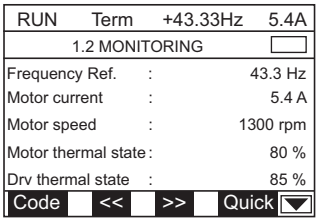

5 digital values

Maintenance, diagnostics

New functions have been added to the Altivar 71 drive to enable it to provide quick and simple maintenance, ultimately boosting productivity:

537361

SCF1 Term +50.00Hz 0.0A
FAULT HISTORY
Short circuit
Overcurrent
External FLT
Overvoltage
Undervoltage
Help Quick

Fault log

537362

SCF1 Term +50.00Hz 0.0A
MOTOR SHORT CIRCUIT
Check the connection cables
and the motor insulation.

Perform the diagnostic test.
Quick

Troubleshooting screen

■ Response to faults or alarms

It is possible to use the alarm management or drive operation configuration functions to take corrective actions before stopping the machine.

■ Fault log and help

When a fault occurs, a help screen is available to quickly identify the cause of the fault.
When a fault occurs, values such as speed, current, thermal state and timer are saved and restored in the fault log.
The last 8 faults are stored.

537363

RUN Term +50.00Hz 5.4A
1.11 IDENTIFICATION
ATV71HU22N4
2.2 kW / 3HP
380 / 480 V
Appl. Software V1.0 IE 01
MC Software V1.0 IE 01
<< >> Quick

Identification screen

■ IDENTIFICATION menu

The IDENTIFICATION menu can be used to display the relevant serial numbers and software versions, thereby helping to manage the equipment base. This information, also available with the PowerSuite software workshop, can be exported to other database-type software applications.

537364

RUN Term +50.00Hz 5.4A
SERVICE MESSAGE
For technical support,
dial 32 12 75
Quick

Example of a customized message

■ Test functions

The Altivar 71 drive includes the following test functions:
□ Identifying any motor short-circuit before start-up
□ Running, via the graphic display terminal or PowerSuite software workshop, automatic procedures during maintenance operations to test:
- the motor
- the drive power components

The test results are shown on the graphic display terminal or using the PowerSuite software workshop.
It is also possible to write and read messages in the drive using the graphic display terminal or the PowerSuite software workshop.

■ Oscilloscope function

The Altivar 71 drive has an oscilloscope function, which produces traces that can be viewed using the PowerSuite software workshop.
The PowerSuite software workshop can also be used to carry out remote diagnostics via modem.

Controlling the drive

■ **Via the drive I/O**

Control signals are transmitted via cable to the I/O. Functions are assigned to logic inputs, analog inputs, etc.
A logic input can be assigned to more than one function. This means that two functions can be controlled using a single signal, thereby limiting the number of inputs required.

The Altivar 71 drive I/O can be configured independently from each other.
For instance,
□ A time delay can be applied when it comes to reading the logic inputs, so as to avoid any bounce-back from certain switches.
□ Transforming incoming signals on the analog inputs can help the drive fully adapt to the control devices and applications:
- Minimum and maximum values for the input signal
- Input filtering in order to eliminate unwanted interference from the signals received
- Magnifying glass effect through delinearizing the input signal in order to increase the precision with small amplitude signals
- “Pedestal” and “Deadband” functions for signals in order to prevent low speed operations which can have an adverse effect on the application
- “Mid-point” function, which can be used from a unipolar input signal to obtain a bipolar output signal to control the speed and direction of rotation

□ Transforming analog outputs which transfer information sent by the drive to other devices (display units, drives, PLCs, etc.):
- voltage or current output signal
- minimum and maximum values for the output signal
- output signal filtering

Logic outputs can be delayed on activation and deactivation.
The output state can also be configured when the signal is active.
The frequency control signals are also transformed by the drive:
□ signal frequency minimum and maximum values (30 kHz on the extended I/O card’s RP input, 300 kHz maximum on the encoder interface card input).

■ **Via the remote graphic display terminal**

The rotation commands and references (torque, speed or PID) can be controlled via the graphic display terminal. Some application functions can also be assigned to the function keys F1, F2, F3 and F4 on the graphic display terminal. It is possible to manage a change in command and/or reference source (bumpless function) in different ways.
For example: two options are offered when switching from control via the terminals to control via the graphic display terminal:
□ stop the Altivar 71 drive, or
□ continue operation with a copy of the direction of rotation and reference

Controlling the drive (continued)

■ **Via a communication network**

□ **I/O profile**

The I/O profile, which is quick and easy to use, can be used to control the Altivar 71 drive via the communication network, in the same way as via the I/O terminals.
When commands are sent via a network they are written in a command word.
This word behaves like virtual terminals containing logic inputs.
Application functions can be assigned to the bits of this word. More than one function can be assigned to the same bit.

The commands and references can come from different sources, such as the terminals, graphic display terminal or communication networks.
Each source can be set or switched individually using logic inputs or command word bits.

The I/O profile is supported by all integrated communication ports (Modbus, CANopen machine bus), as well as by all the communication cards available (Modbus TCP, Fipio, PROFIBUS DP, etc.).

□ **CiA 402 profile (“Device Profile Drives and Motion Control”)**

This profile, from the CiA (CAN in Automation) organization, describes standard functions, parameters and operation for variable speed drives.
This standard is an extension of the Drivecom profile. The Altivar 71 drive complies with the CiA 402 profile which supports the following 2 modes: separate and not separate.

Separate mode

The Start/Stop commands and references can come from different sources.
E.g. the speed reference is transmitted by the Modbus TCP network and the Start/Stop commands by the logic signals wired on the terminals.

Each source can be set or switched individually using logic inputs or command word bits.

Not separate mode

The Start/Stop commands and references (speed, torque, PID, etc.) come from the same source (e.g. CANopen machine bus).

It is possible to replace this source by another one, using a logic input or command word bit.

The CiA 402 profile is supported by all integrated communication ports (Modbus, CANopen machine bus), as well as by all the communication cards available (Modbus TCP, Fipio, PROFIBUS DP, etc.).

□ **CIP profile**

The CIP profile is supported by the DeviceNet communication card.

Application functions

■ 2-wire control

This function is used to control the direction of operation by means of a stay-put contact.
It is enabled by means of 1 or 2 logic inputs (non-reversing or reversing).

This function is suitable for all non-reversing and reversing applications.
3 operating modes are possible:
□ Detection of the state of the logic inputs
□ Detection of a change in state of the logic inputs
□ Detection of the state of the logic inputs with forward operation always having priority over reverse

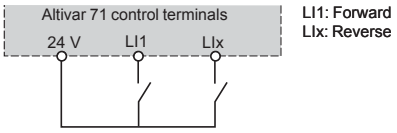

Wiring diagram for 2-wire control

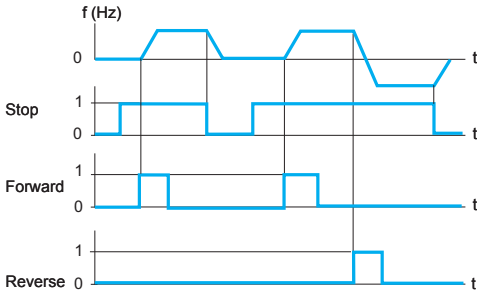

Example of 3-wire control operation

■ 3-wire control

This function is used to control the operating and stopping direction by means of pulsed contacts.
It is enabled by means of 2 or 3 logic inputs (non-reversing or reversing).

This function is suitable for all non-reversing and reversing applications.

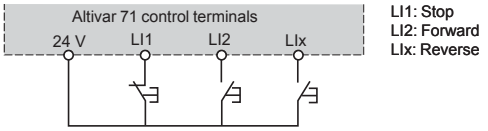

Wiring diagram for 3-wire control

■ Phase rotation

This function can be used to reverse the direction of rotation without modifying the drive wiring.

537365

RDY	Term	+0.00Hz	0.0A
	RAMP		
Ramp shape	:		Linear
Ramp increment	:		0.01
Acceleration	:		3.92 s
Deceleration	:		0.54 s
Ramp 2 threshold	:		0.0 Hz
Code			Quick

Ramp settings

■ Ramps

□ Acceleration and deceleration ramp times

This function is used to define acceleration and deceleration ramp times according to the application and the machine dynamics.

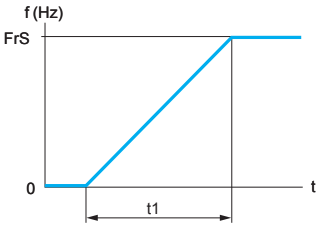

Linear acceleration ramp

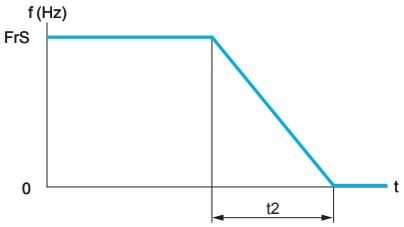

Linear deceleration ramp

FrS: Nominal motor frequency
t1: Acceleration time
t2: Deceleration time
t1 and t2 can be set independently from 0.01 to 9999 s
(according to one of the following ramp increments: 0.01 s, 0.1 s or 1 s)
Factory setting: 3 s.

□ Acceleration and deceleration ramp profile

Used to gradually increase the output frequency starting from a speed reference, following a linear profile or a preset profile.

In the case of applications involving handling, packaging and passenger transport, the use of S ramps takes up mechanical play and eliminates jolts, and also limits "non-following" of speed during rapid transient operation of high-inertia machines. Selecting "linear", "S", "U" or customized profiles assigns both the acceleration and deceleration ramps.

S ramps

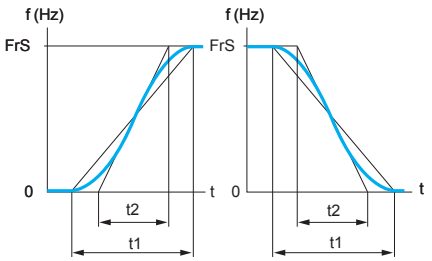

FrS: Nominal motor frequency
t1: Ramp time set
t2 = 0.6 x t1
The curve coefficient is fixed.

U ramps

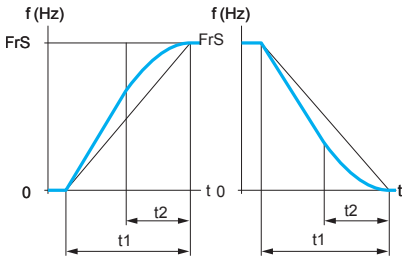

FrS: Nominal motor frequency
t1: Ramp time set
t2 = 0.5 x t1
The curve coefficient is fixed.

Customized ramps

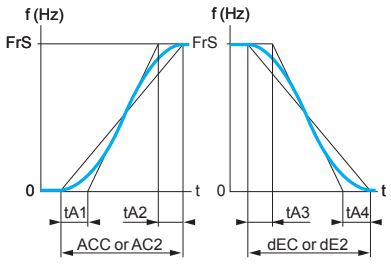

FrS: Nominal motor frequency
tA1: Adjustable between 0 and 100% (of ACC or AC2)
tA2: Adjustable between 0 and (100% - tA1) (of ACC or AC2)
tA3: Adjustable between 0 and 100% (of dEC or dE2)
tA4: Adjustable between 0 and (100% - tA3) (of dEC or dE2)
ACC: Acceleration ramp 1 time
AC2: Acceleration ramp 2 time
dEC: Deceleration ramp 1 time
dE2: Deceleration ramp 2 time

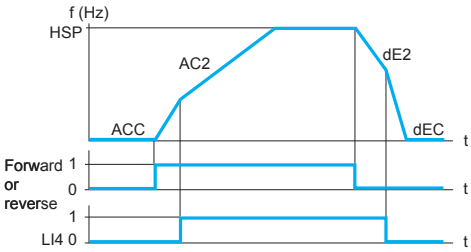

Example of switching using logic input LI4

Acceleration 1 (ACC) and deceleration 1 (dEC):
- Adjustment 0.01 to 9999 s
- Factory setting 3 s

Acceleration 2 (AC2) and deceleration 2 (dE2):
- Adjustment 0.01 to 9999 s
- Factory setting 5 s

HSP: High speed.

□ Ramp switching

This function is used to switch two acceleration and deceleration ramp times, which can be adjusted separately.
Ramp switching can be enabled by:
- a logic input
- a frequency threshold
- a combination of the logic input (or a command word bit) and the frequency threshold
- a command word bit

This function is suitable for:
- material handling with smooth starting and approach
- machines with fast steady state speed correction

□ Automatic adaptation of deceleration ramp

Used to automatically adapt the deceleration ramp if the initial setting is too low when the load inertia is taken into account. This function prevents the drive from locking in the event of an overbraking fault.
When this function is active and a short deceleration time has been set, the drive optimizes the motor power supply in order to achieve a high braking torque.

This function is suitable for all applications not requiring precise stopping and not using braking resistors.

Automatic adaption must be disabled for machines with a stop position on a ramp and using a braking resistor. This function is automatically disabled if the brake sequence is configured.

537366

RDY	Term	+0.00Hz	0.0A
PRESET SPEEDS			
2 preset speeds	:		LI3
4 preset speeds	:		LI4
8 preset speeds	:		LI5
16 preset speeds	:		NO
Preset speed 2	:		10.0 Hz
Code	<<	>>	Quick

Preset speed settings

■ Preset speeds

This can be used to switch preset speed references.
Choose between 2, 4, 8 or 16 preset speeds.
It is enabled by means of 1, 2, 3 or 4 logic inputs.
Preset speeds can be set in increments of 0.1 Hz, from 0 Hz to 500 Hz or 1000 Hz, depending on the rating.

This function is suitable for material handling and machines with several operating speeds.

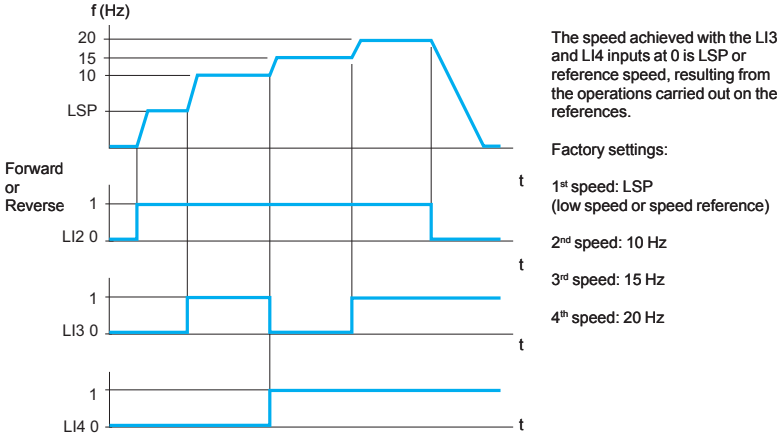

Example of operation with 4 preset speeds and 2 logic inputs

■ Jog operation

This can be used for pulse operation with minimum ramp times (0.1 s), limited speed reference and minimum time between 2 pulses.
It is enabled by 1 logic input and pulses given by the operating direction command.

This function is suitable for machines with product insertion in manual mode (e.g. gradual movement of the mechanism during maintenance operations).

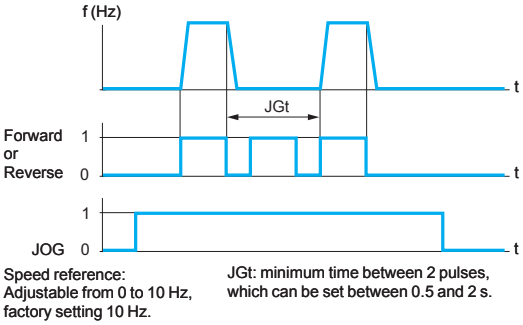

Example of jog operation

■ Limiting low speed operating time

The motor is stopped automatically after a period of operation at low speed (LSP) with a zero reference and a run command present.
This time can be set between 0.1 and 999.9 seconds (0 corresponds to an unlimited time). Factory setting 0 s. The motor restarts automatically on the ramp when the reference reappears or if the run command is interrupted and then re-established.

Function suitable for automatic Stops/Starts.

■ **Motor control types**

□ **Flux vector control with sensor (FVC)**
In current mode, this control type can be used to obtain the best static and dynamic torque performance.

□ **Sensorless flux vector control**
In voltage mode, this control type can be used with a single motor or motors connected in parallel.
In current mode, this profile performs better than the previous type, but it cannot supply power to motors connected in parallel.

□ **2-point vector control**
The zone for operating at constant power can be optimized by defining an additional point in the control profile.
This function should be used with motors offering a two-part defluxing zone.
It can be used to limit the voltage at the motor terminals when the motor is being powered by a high line supply.

□ **Voltage/frequency ratio**
This control type is particularly suitable for special motors (high-speed motors, synchronized asynchronous motors, etc.). The ratio can be adjusted by 2 or 5 points and used to achieve output frequencies of up to 1000 Hz.

□ **ENA system**
This profile is reserved for unbalanced machines (presses, etc.). It can be used to reduce mechanical stress, power consumption and avoid the use of braking resistors.

□ **Synchronous motor**
This control type is exclusively reserved for controlling open loop synchronous permanent magnet motors with sinusoidal electromotive force (EMF).

■ **Using an incremental encoder**
The Altivar 71 drive uses encoder feedback to:
□ Operate in FVC closed loop control mode. In addition to the torque performance and speed accuracy it provides, the speed feedback can also be used to manage overspeed and slipping protection.
□ Improve the steady state speed accuracy and/or manage overspeed and slipping protection in the other control types (FVC open loop control mode and U/f ratio)
□ Manage only overspeed and slipping protection

■ **Encoder tests**
The Altivar 71 drive can detect encoder signal loss, as well as a mechanical break in the coupling between encoder and motor.

■ **Limiting motor overvoltage**
The Altivar 71 drive inverter bridge control can be used to limit overvoltage in the motor terminals, which is double the voltage level in the DC bus (Stressless PWM). This function is useful in cases where long lengths of cabling, rewound motors or motors in a low isolation class are involved.

■ **Auto tune**
Auto-tuning can be performed:
□ using a dialogue tool (graphical display terminal, PowerSuite software workshop, integrated 7-segment display terminal)
□ via a communication network
□ automatically every time the drive is switched on
□ by enabling a logic input

Auto-tuning is used to optimize application performance.
In Flux Vector Control mode (FVC closed loop and FVC open loop with current control), certain parameters are measured periodically.
Saving the motor thermal state can help to compensate exactly for the motor resistors, even after the drive has been switched off.

■ **Switching frequency, noise reduction**
The switching frequency setting permits a reduction in the noise generated by the motor for any application requiring a low level of noise.
The switching frequency is modulated randomly in order to avoid resonance.
This function can be disabled if it causes instability.
High frequency switching of the intermediate DC voltage can be used to supply the motor with a current wave that has little harmonic distortion.
The switching frequency can be adjusted during operation to reduce the noise generated by the motor.
Value: 1 to 16 kHz; factory setting 2.5 or 4 kHz, depending on the rating.

■ **Motor fluxing**
This can be used to obtain rapid high torque on start-up; magnetic flux needs to be already established in the motor.
There is a choice between open loop or closed loop operation.

In continuous mode, the drive automatically establishes the flux when it is powered up.

In non-continuous mode:
□ If a logic input or command word bit is assigned to the motor fluxing command, flux is established when the command is confirmed.
□ If neither a logic input nor a command word bit has been assigned, or if the latter are not active when a run command is given, fluxing occurs when the motor starts.

Fluxing is accelerated if a current higher than the nominal motor current is applied, then it is set to the value of the motor magnetizing current.

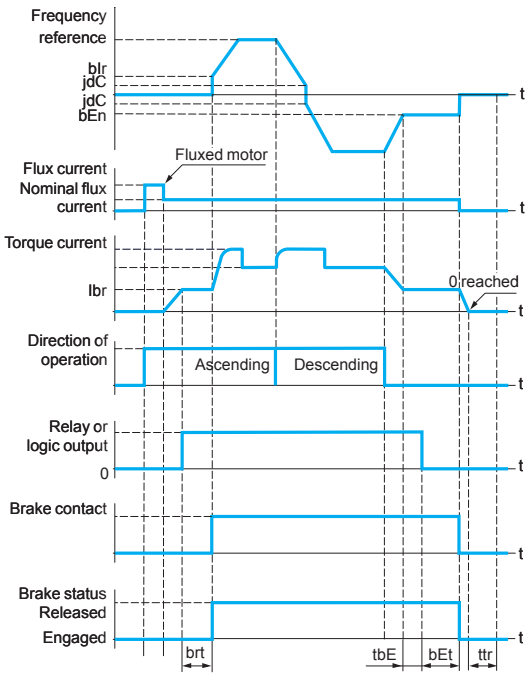

Open loop vertical movement

bEn: Brake engage frequency
bEt: Brake engage time
blr: Initialization of ramp once the "brake release" time (brt) has expired
brt: Brake release time
Ibr: Brake release current
JdC: Reverse jump
tbE: Brake engage time
ttr: Restart time

***Note:** In open loop mode, feedback from an incremental encoder can be connected to the drive in order to directly detect overspeed and slipping.*

■ Brake control

This can be used to manage control of an electromagnetic brake in synchronization with starting and stopping the motor to avoid jolts and load slipping.
The brake control sequence is managed by the drive.

□ Movement type

The Altivar 71 drive adapts the brake control operation to the type of movement, whether vertical or horizontal, in order to achieve maximum torque performance and eliminate jolts.

□ Brake feedback via contact

By connecting a brake contact to the drive, it is possible to detect brake faults.
If the brake status does not match the relevant control (the contact must be open for a released brake), the drive locks when a fault occurs.

□ Brake release pulse

This can be used to set the torque for brake release when ascending (forward) or two release thresholds (one for ascending and the other for descending).

This function is only available for vertical movements.

□ Brake engage on reversal of operating direction

To prevent the speed from passing through zero when reversing the direction of rotation, the drive firstly requires the brake to be engaged at the end of deceleration and then for it to be released before accelerating in the other direction of rotation.

□ Brake engage request time delay

In the case of slewing movements, this function can be used, at the end of deceleration, to control how the brake is engaged when the torsional stress being exerted on the machine structure is zero.

□ Automatic DC injection

In the case of a horizontal movement, the DC injection at the end of deceleration can be used to prevent jolting when the brake is being engaged.

This function is only available for horizontal movements.

■ Limit switch management

This can be used to manage the operation of one or two limit switches (with 1 or 2 operating directions).
Each limit (forward, reverse) is associated with a logic input. The type of stop that occurs on detection of a limit can be configured as a stop on ramp, freewheel or fast stop.
Following a stop, the motor can restart in the opposite direction only.

■ Slack sling

This is used to adapt the motor speed to the load depending on the minimum configured torque, either in speed reference mode or in current limiting mode.
A logic output can be assigned to this function to indicate the load value in relation to the configured torque value.

■ **High-speed hoisting**

This can be used to optimize cycle times for hoisting movements when the load is zero or small.
It allows operation at constant power (motor defluxing beyond the nominal motor frequency) in order to achieve a higher speed than the nominal speed, without exceeding the nominal motor current and thereby preventing the motor from overheating.

There are 2 possible operating modes:

□ Speed reference mode: The maximum permitted speed is calculated by the drive at an imposed speed step so that the drive can measure the load.

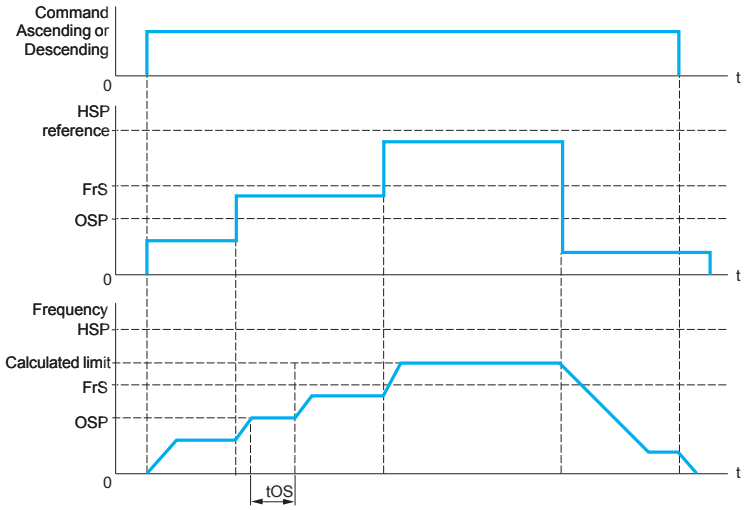

Speed reference mode

FrS: Nominal motor frequency
HSP: High speed parameter
OSP: Adjustable speed step for load measurement
tOS: Load measuring time
Two parameters can be used to reduce the speed calculated by the drive, for ascending and descending.

□ Current limiting mode: The maximum permitted speed is the speed at which the current is limited in the motor quadrant, ascending only. For descending, operation is always based on speed reference mode.

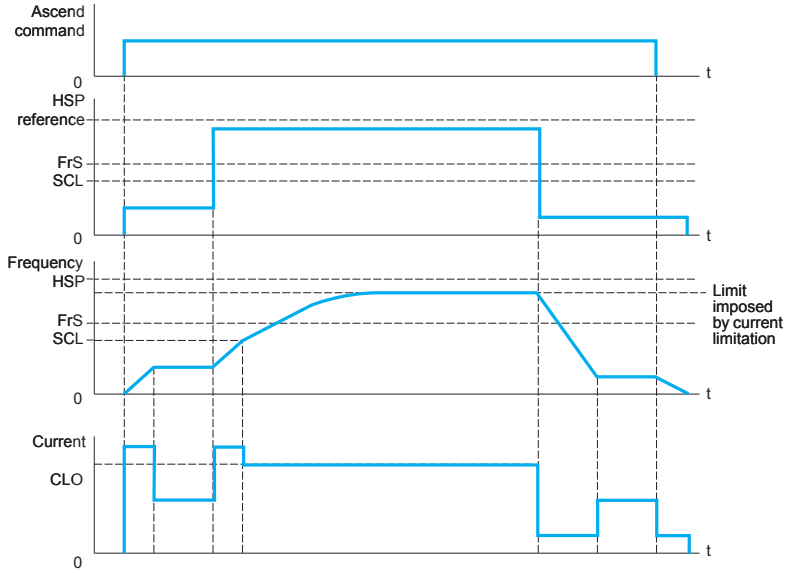

Current limiting mode

CLO: Current limitation for high speed-function
FrS: Nominal motor frequency
HSP: High speed parameter
SCL: Adjustable speed threshold above which current limitation is active

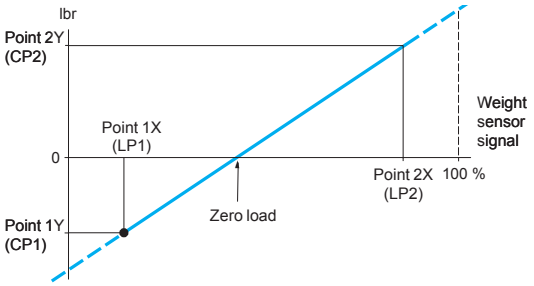

CP1, CP2, LP1, LP2: weight sensor calibration points

This curve can represent a weight sensor on a lift winch, where a zero load is exerted on the motor when the load in the cabin is not zero.

■ External weight measurement

This function uses the information supplied by a weight sensor via an analog input (usually a 4-20 mA signal) to adapt the current (Ibr) of the Brake logic control function.

Function suitable for applications involved in:
□ measuring the total weight of a hoisting winch and its load
□ measuring the total weight of a lift winch, the cabin and counterweight.

The current (Ibr) is adapted according to the curve opposite.

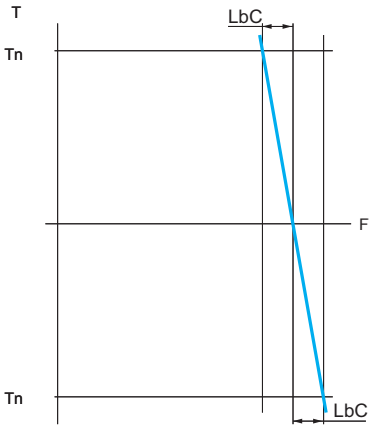

LbC: Load correction (Hz)

Load sharing

■ Load sharing

This function can be used for applications where several motors are mechanically linked in order to balance the loads of the different motors by adjusting the speed according to the torque on each motor.

■ Output contactor control and integrity check

□ Control

This allows the drive to control a contactor located between the drive and the motor.
The request to close the contactor is made when a run command appears.
The request to open the contactor is made when there is no current in the motor.

Note: *If a DC injection braking function has been configured it should not be left operating too long in stop mode, as the contactor only opens at the end of braking.*

□ Integrity check

This check is carried out by connecting a volt-free contact on each contactor to one of the drive's logic inputs.
The corresponding logic input should be at 1 when there is no run command and at 0 during operation.
When there is any inconsistency, the drive locks in fault mode if the output contactor does not close (LIx = 1) or gets stuck (LIx = 0). The time delay for when the drive locks in fault mode can be adjusted.

These sequences are commonly used in lift applications.
In order to increase the safety level and reduce the amount of maintenance work, it is recommended that the Altivar 71 drive's integrated "Power Removal" safety function is used.

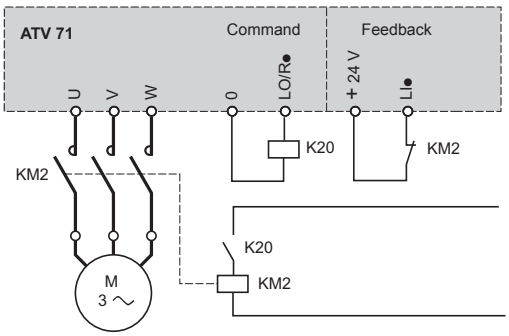

Output contactor control and integrity check

■ Stop on thermal alarm

This can be used to:
□ Allow a movement to end before examining a thermal fault. There are two adjustable thresholds used to define the thermal state level which, when exceeded, makes a machine stop.
□ Prevent a new run command from being accepted as long as the drive and motor temperatures are not less than 100%.

Function suitable for lift applications: it can prevent people getting trapped if a lift gets stuck between two floors.

■ Evacuation following power failure

This can be used to control the reduced speed engine with a reduced voltage supply (220 V ≂, for example: uninterruptible power supply (UPS)), by preserving torque performance.

Function suitable for lift applications: When there is a power failure, it facilitates the evacuation of people trapped in a lift stuck between two floors.

■ **Uncontrolled output cut**
It is possible to configure output phase loss protection, which will allow the drive or motor circuit to be broken without the drive becoming locked in fault mode and facilitate a smooth restart after the motor has been reconnected. The output phase loss may also lock the drive, depending on the configuration.

537367

RDY	Term	+0.00Hz	0.0A
+/- SPEED			
+ speed assign. :			LI3
- speed assign. :			LI4
Ref. saved :			RAM
Code			Quick

+/- speed function settings

■ **+/- speed**
Used to increase or decrease a speed reference by means of 1 or 2 logic inputs, with or without the last reference being saved (motorized potentiometer function). This function is suitable for centralized control of a machine with several sections operating in one direction or for control by a handling crane pendant control station with two operating directions.

Two types of operation are available:
□ Use of single action buttons: 2 logic inputs are required in addition to the operating direction(s).
□ Use of double action buttons: only 1 logic input assigned to + speed is required.

Use of single action buttons: 2 logic inputs are required in addition to the operating direction(s).

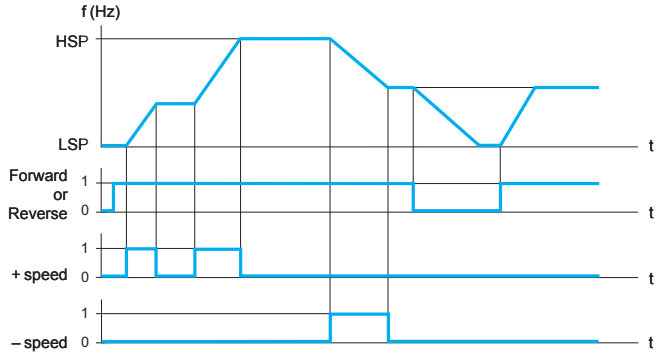

PV : low speed, HSP: high speed
Example of "+/- speed" with 2 logic inputs, single action buttons and reference saving

Use of double action buttons: only 1 logic input assigned to + speed is required.

Logic inputs:

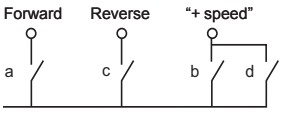

a and c: 1st press
b and d: 2nd press

	Released (- speed)	1st press (speed maintained)	2nd press (+ speed)
Forward button	–	a	a and b
Reverse button	–	c	c and d

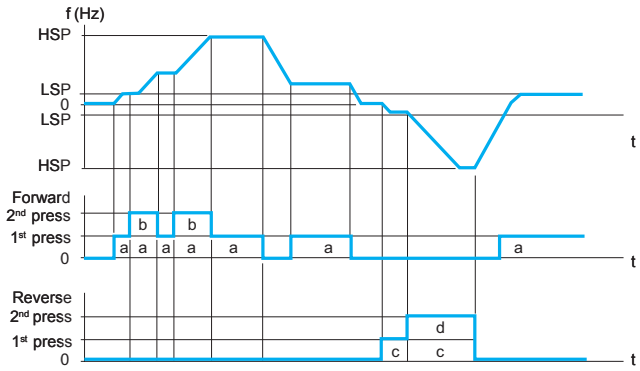

PV : low speed, HSP: high speed
Example with double action buttons and 1 logic input
Note: *This type of +/- speed control is incompatible with 3-wire control.*

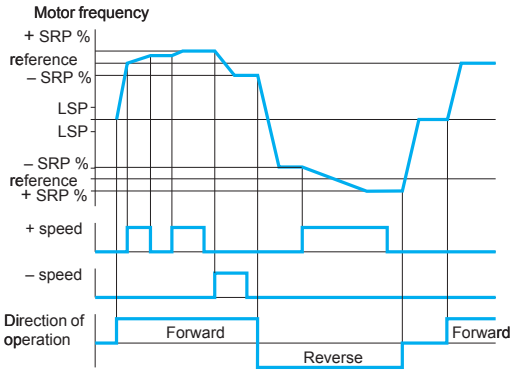

Example of +/- speed around a 2-wire control reference

□ **Reference saving**

This function is associated with "+/- speed" control.
This can be used for reading and saving the last speed reference prior to the loss of the run command or line supply. The saved reference is applied the next time a run command is received.

□ **+/- speed around a reference**

The reference is given by Fr1 or Fr1b, including, if relevant, the summing, subtraction and multiplication functions, as well as the preset speeds.
During the run command the drive goes to the reference, following the acceleration and deceleration ramps (pressing +/- speed makes the speed vary around this reference according to acceleration ramp 2 and deceleration ramp 2).
+ or – speed variation around the reference is limited to a percentage of the reference (SRP parameter). When operation has stopped, the amended reference is not saved.
The maximum total reference is always limited by high speed (HSP parameter) and the minimum reference (LSP parameter).

■ **Spooling**

□ **Traverse control**

Function for winding reels of thread (in textile applications)

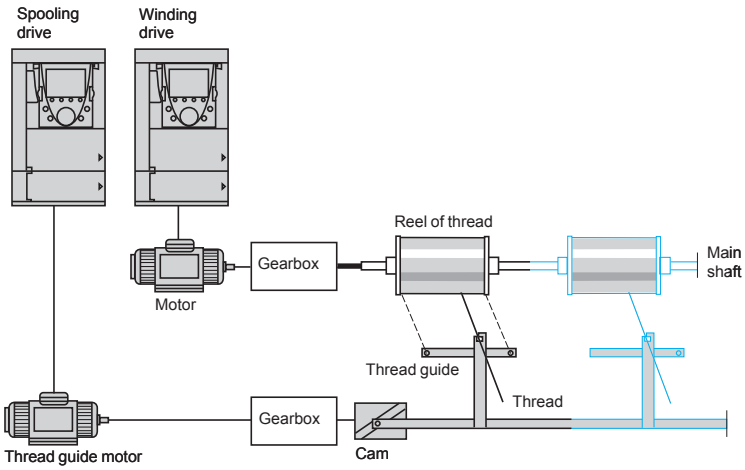

The cam rotation speed must follow a precise profile to ensure a steady, compact, linear reel is obtained.

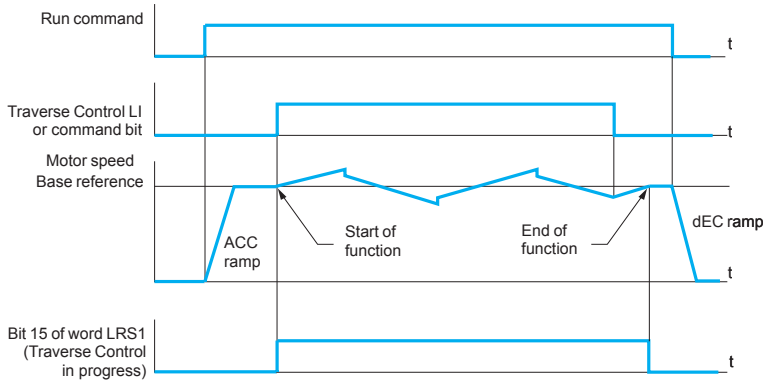

A function can also be used to reduce the base reference as the reel gets larger.

□ **Counter Wobble**

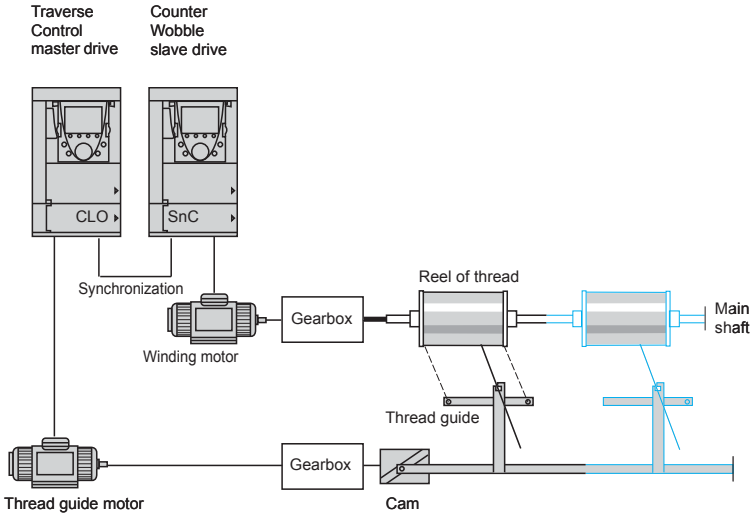

The Counter Wobble function is used in certain applications to obtain a constant thread tension when the Traverse Control function is producing considerable variations in speed on the thread guide motor.
The master drive controls the speed of the thread guide, while the slave drive controls the winding speed. The function assigns the slave a speed profile, which is in antiphase to that of the master. This means that synchronization is required, using one of the master's logic outputs and one of the slave's logic inputs.

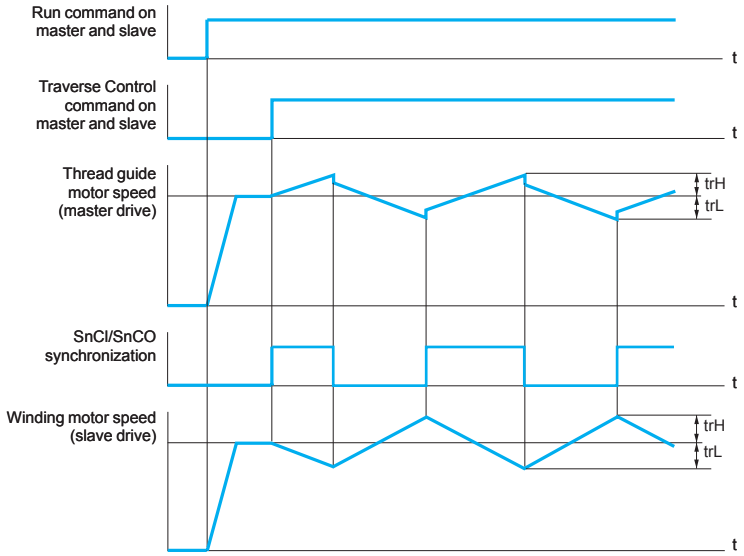

■ **Automatic catching of a spinning load with speed detection** ("catch on the fly")
This function is used to restart the motor smoothly after one of the following events, provided the run command is still present:
□ loss of line supply or power off
□ fault reset or automatic restart
□ freewheel stop

On disappearance of the event, the effective speed of the motor is detected in order to restart on a ramp at this speed and return to the reference speed.
The speed detection time can reach 0.5 s.
This function is automatically disabled if the brake sequence is configured.
This function is suitable for machines for which the motor speed loss is negligible during a power failure (high-inertia machines such as centrifuges, etc.).

■ **Undervoltage management**
Depending on the application, it is possible to configure the Altivar 71's response to undervoltages or power failures.
If undervoltage occurs:
□ The Altivar 71 drive can continue operating with undervoltage levels up to -50% (adjustable threshold)
□ If the drive locks as a result, management of the fault relay can be configured (open or not). If the fault relay does not open an alarm is shown.

The Altivar 71 drive can also be configured to prevent the drive locking (using an alarm):
□ Controlled stop according to the type of stop configured
□ Deceleration based on a ramp which it automatically adapts to maintain the DC bus voltage, thereby preventing the drive from locking in fault mode
□ Instant IGBT (inverter bridge) loss followed by power supplied to the motor as soon as the line voltage has reappeared. This function can be used to prevent the Altivar 71 drive being reinitialized.

■ **Braking balance**
When several drives are connected on a common DC bus, this function can be used to adjust the braking thresholds in order to balance the braking powers between the various drives or braking units.

■ **Braking resistor thermal protection**
The Altivar 71 drive incorporates thermal protection for the braking resistor if it is not equipped with a thermal switch. If the resistor thermal state is too high an alarm can be assigned to the logic output or the drive may lock in fault mode, depending on how the function is programmed.

■ **Parameter set switching (multi-parameter)**
This can be used to switch 3 sets of 15 parameters maximum when the motor is running.
Each set can contain a different value for each of the parameters.
The sets are switched using 1 or 2 logic inputs or command word bits.

Function suitable for machines involving 2 or 3 manufacturing processes.

■ **Motor or configuration switching (multi-motor or multi-configuration)**
The Altivar 71 drive can have 3 configurations, which can be activated remotely, allowing it to adapt to:
□ 2 or 3 different motors or mechanisms in multi-motor mode. In this instance, the thermal state for all the motors is calculated and saved. This means that each motor is protected thermally.
□ 2 or 3 configurations for the same motor in multi-configuration mode. This function can also be used to save the current configuration in another memory zone, from which it can be retrieved.
Switching is carried out using 1 or 2 logic inputs, depending on the number of motors or configurations chosen (2 or 3).

Multi-motor and multi-configuration modes cannot be used together.

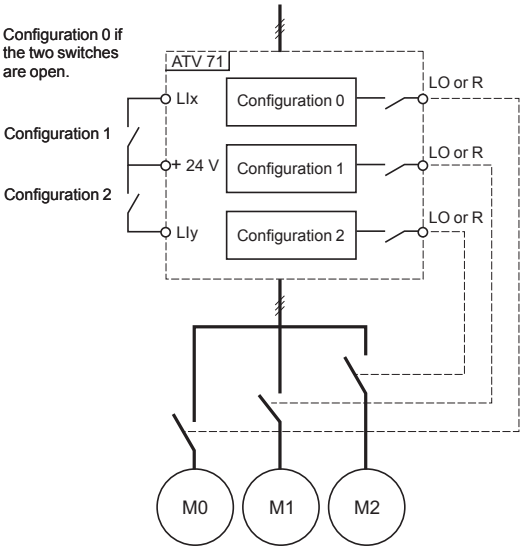

Schematic diagram for multi-motor mode

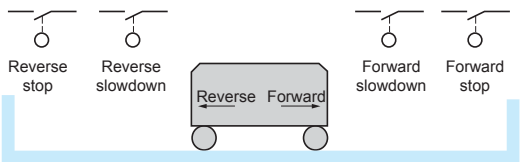

***Example 1:** limit switch positioning*
Slowdown and stopping occur when the sensor changes state (open contact). It is possible to assign a command word bit or a logic input to disable the function in order to be able restart or not stop on the position.

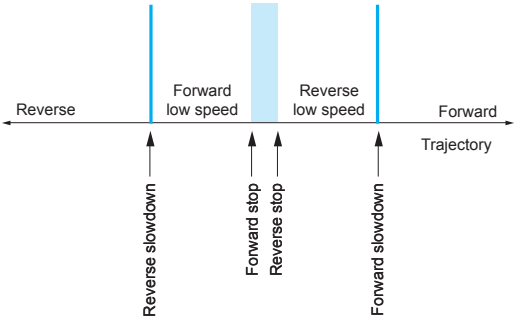

***Example 2:** positioning on a target zone*
The disable contact can be used to restart in order to get past the target.

■ Positioning on limit switches or position sensors

This can be used to manage positioning based on limit switches or position sensors.

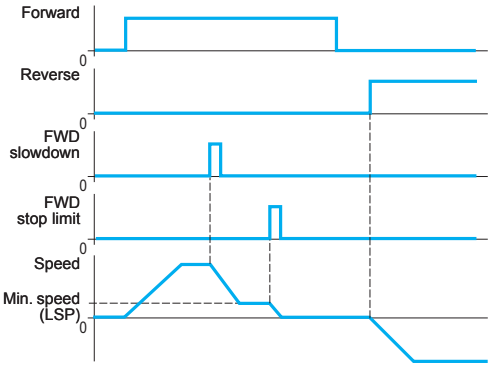

Activating the slowdown contact or stop contact allows the device to start in the other direction, even at high speed.

Slowdown mode can be configured:
- □ The drive uses the validated ramp time
- □ The drive calculates a ramp time according to the actual speed when the request to slow down is made. This calculation can be used to optimize the cycle time by limiting the time spent operating at low speed.

The stop type can also be configured:
- □ stop on ramp
- □ freewheel stop
- □ fast stop

■ Short and long cam operation

□ Short cams

In this instance, when operating for the first time or after restoring the factory settings, the drive must initially be started outside the slowdown and stop zones in order to initialize the function.

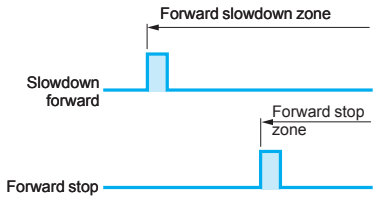

□ Long cams

In this instance, there is no restriction, which means that the function is initialized across the whole trajectory.

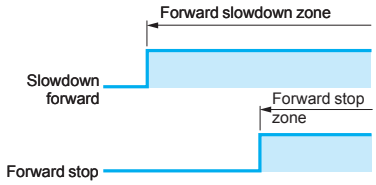

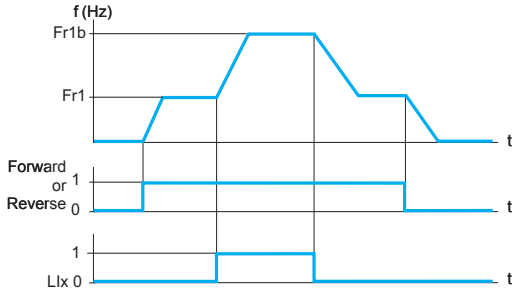

Example of reference switching

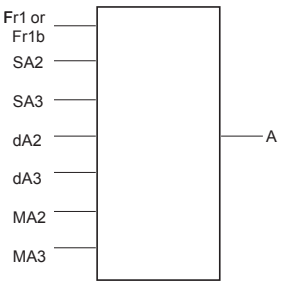

A: drive reference
SA2, SA3: summed inputs
dA2, dA3: subtraction inputs
MA2, MA3: multiplication inputs.

■ Reference switching

Switching between two references (speed, torque, PID, etc.) can be enabled by:
- □ a logic input
- □ a command word bit

Reference 1 (Fr1) is active if the logic input (or command word bit) is at 0; reference 2 (Fr1b) is active if the logic input (or command word bit) is at 1.
References can be switched with the motor running.

Reference Fr1b, like Fr1, can originate from:
- □ an analog input (AI)
- □ a frequency control input (RP)
- □ the graphic display terminal
- □ the Modbus serial link or the CANopen machine bus
- □ a communication card
- □ the Controller Inside programmable card

■ Operations on references (summing, subtraction, multiplication)

Summing, subtraction and multiplication inputs can be activated simultaneously.

The drive reference is thus:
- □ reference of drive A = (Fr1 or Fr1b + SA2 + SA3 - dA2 - dA3) x MA2 x MA3

□ Summing inputs

These can be used to add 2 to 3 references from different sources to Fr1 or Fr1b (see “Reference switching”).
The references to be added together are selected from all the possible types of reference.

For example:
Reference Fr1 or Fr1b from AI1
Reference SA2 from CANopen
Reference SA3 from a communication card
Reference of drive A = Fr1 or Fr1b + SA2 + SA3.

□ Subtraction inputs

These can be used to subtract 2 to 3 references from different sources from Fr1 or Fr1b (see “Reference switching”).
The references to be subtracted are selected from all the possible types of reference.

For example:
Reference Fr1 or Fr1b from AI1
Reference dA2 from CANopen
Reference dA3 from a communication card
Reference of drive A = Fr1 or Fr1b - dA2 - dA3.

□ Multiplication inputs

These can be used to multiply 2 to 3 references from different sources by Fr1 or Fr1b (see “Reference switching”).
The references to be multiplied are selected from all the possible types of reference.

For example:
Reference Fr1 or Fr1b from AI1
Reference MA2 from CANopen
Reference MA3 from a communication card
Reference of drive A = Fr1 or Fr1b x MA2 x MA3.

■ **PID regulator**
This can be used to regulate a process with a reference and feedback given by a sensor.
Function suitable for controlling traction on a winder.

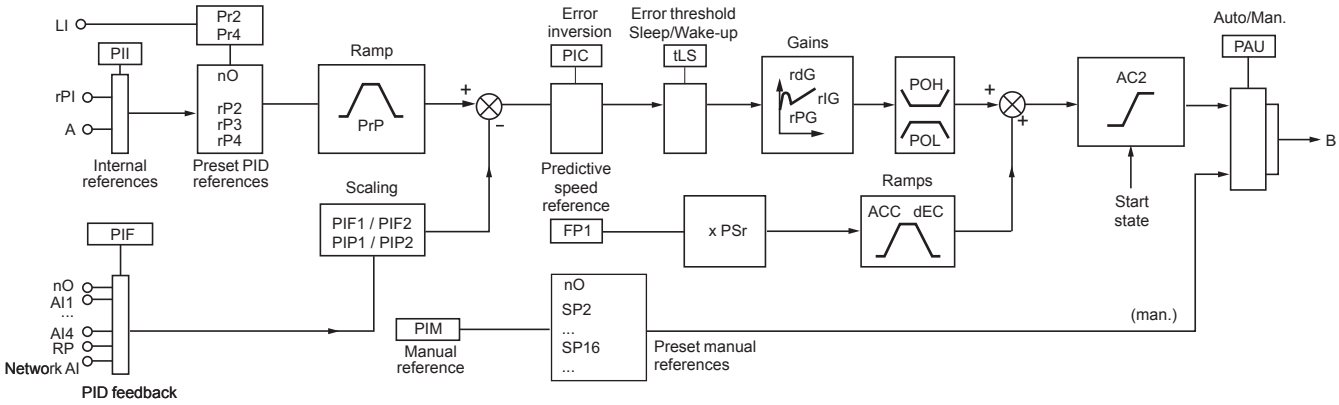

ACC: Acceleration, DEC: Deceleration, LI: Logic inputs, B: Speed reference

□ **Internal references**
- rPI: reference transmitted by the graphic display terminal or a communication network.
- A: reference given by Fr1 or Fr1b with the summing, subtraction and multiplication functions, as appropriate.

The "PII" parameter is used to choose between these two references.

□ **Preset PID references**
2 or 4 PID references are available. Table showing combinations of selected PID references:

LIx (Pr4)	LIy (Pr2)	Reference
0	0	rPI or A
0	1	rP2
1	0	rP3
1	1	rP4

□ **PID feedback**
PID feedback can be assigned to one of the analog inputs (AI1 to AI4), the frequency control input (RP) or the encoder, depending on the option cards present. It can also be transmitted by a communication network (AI network).

□ **Predictive speed reference**
This reference can come from the terminals (analog inputs, encoders, etc.), the graphic display terminal or a communication network.
This speed input gives an initial reference for starting.

□ **Auto/Man.**
This can be used to switch from speed regulation mode (Man.) to PID regulation mode (Auto). A logic input or command word bit is used for switching.
Speed regulation mode (Man.)
The manual reference is transmitted via the terminals (analog inputs, encoder, preset speeds, etc.).
With manual switching, the speed reference changes according to the ACC and dEC ramp times.
PID regulation mode (Auto)
In automatic mode it is possible to:
- adapt the references and feedback to the process (transformation)
- correct a PID inversion
- adjust the proportional, integral and derivative gains (Kp, Ki and Kd)
- shunt the integral
- use the "alarm" on the logic output or display it on the graphic display terminal, if the threshold is exceeded (Max. feedback, Min. feedback and PID error)
- display the PID reference, PID feedback, PID error and PID output on the graphic display terminal and assign them to an analog output
- apply a ramp (time = PrP) to the PID reference

The motor speed is limited to between LSP and HSP. It is displayed as process values.

■ **Torque control**

This supports torque control or speed regulation mode.
These two types of mode can be switched using a logic input or command word bit.

Function suitable for applications requiring traction control.

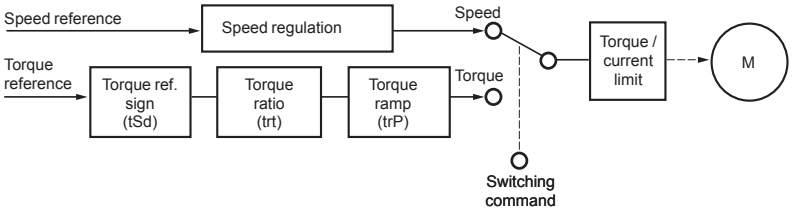

The torque reference is signed and has its own ramp. A torque ratio can be used to scale the reference. It can be transmitted via an analog input, frequency control input (RP input or encoder) or communication network.
The torque sign and value can be output to a logic output and an analog output.

In torque control mode the speed may vary within an adjustable dead band. When it has reached the lower or upper limit, the drive automatically switches to speed regulation mode (fallback position).
The regulated torque is no longer maintained, in which case two scenarios can occur:
□ The speed falls within the dead band; the torque takes the required value.
□ The torque does not return to the required value at the end of an adjustable time; the drive switches to fault or alarm mode, depending on the configuration.

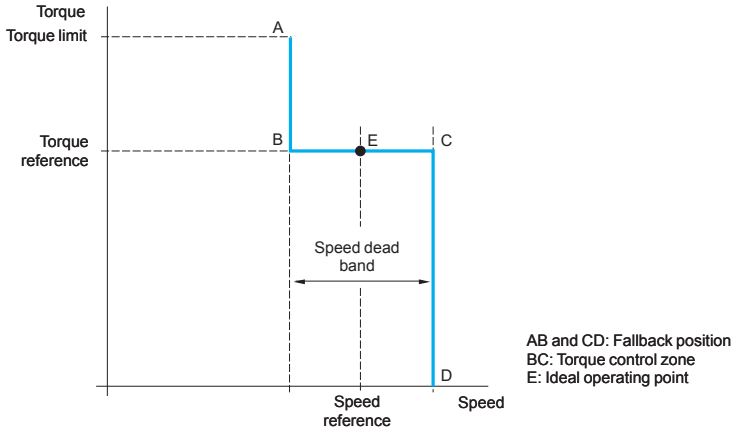

The stop in torque control mode can be configured:
□ automatic switch to speed regulation mode
□ freewheel stop
□ stop at zero torque but still maintaining the flux in the motor for an adjustable period of time.

■ **Torque limit**
This can be used to limit the torque in the motor and generator quadrants using separate settings.

There are two types of torque limit:
□ one with a value set by a parameter
□ the other with a value given by an analog input, frequency control input or encoder.

When both torque limit types are enabled it is the lowest value which is read.
They can be switched using a logic input or command word bit.

This function is not available for voltage/frequency ratio.

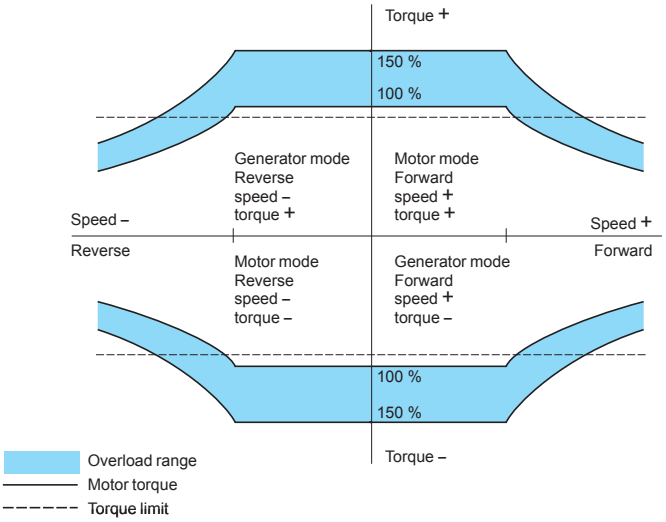

The torque limit operates in both directions of rotation in motor or generator mode.

■ **Torque or current limit detection**
This function can be used to detect when the current or torque limit has been reached.
Depending on the configuration, it is possible to:
□ use an alarm to signal this
□ lock the drive after an adjustable period of time.

■ **Current limit**
A 2nd current limit can be configured between 0 and 1.65 times the drive nominal current and it can be used to limit the rise in motor temperature and the torque.
Switching between the two current limits can be enabled via:
□ a logic input
□ a command word bit

537368

RDY	Term	+0.00Hz	0.0A
2nd CURRENT LIMIT.			
I Limit. 2 activ. :			LI6
I Limit. 2 value :			6.4 A
Current limitation :			7.9 A
Code			Quick

Configuring current switching

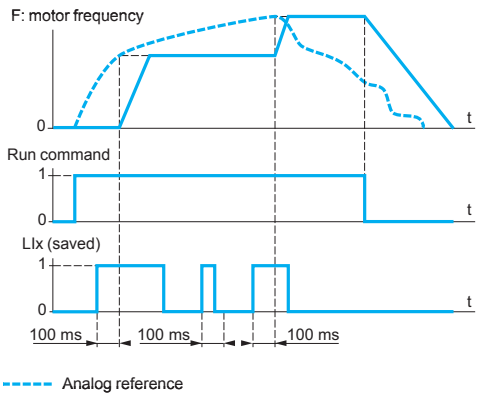

Example of how reference saving works

■ **Reference saving**
This can be used to:
□ Read and save a speed reference level on the reference input using a command lasting longer than 0.1 s on a logic input
□ Control the speed of several drives alternately via a single analog reference and a logic input for each drive
□ Enable a line reference (serial link) on several drives via a logic input in order to synchronize movements by eliminating variations when the reference is sent
The reference is acquired 100 ms after the rising edge of the request.
A new reference is not then acquired until a new request is made.

537369

RDY	Term	+0.00Hz	0.0A
STOP CONFIGURATION			
Type of stop :			Ramp stop
Freewheel assign.:			NO
Fast stop assign. :			LI4
Ramp divider :			0
DC inject. assign. :			NO
Code			Quick

Configuring stop types

■ **Stop types**
□ **Freewheel stop**
This stops the motor by resistive torque if the motor power supply is cut.

A freewheel stop is achieved:
- by configuring a normal stop command as a freewheel stop (on disappearance of a run command or appearance of a stop command)
- by enabling a logic input
- by activating a command word bit

□ **Fast stop**
This can be used to achieve a braked stop with an acceptable deceleration ramp time (divided by an adjustable coefficient from 0 to 10) for the drive/motor unit to avoid locking in the event of an overbraking fault. If the coefficient is equal to 0 the motor decelerates as fast as possible.

Used for conveyors with emergency stop electrical braking.
A fast stop is achieved:
- by configuring a normal stop as a fast stop (on disappearance of a run command or appearance of a stop command)
- by enabling a logic input
- by activating a command word bit

□ **Fastest possible stop**
If the ramp divider coefficient is equal to 0 the motor decelerates as fast as possible.

□ **DC injection stop**
This can be used to brake high-inertia machines at low speed or maintain torque on stopping.
A DC injection stop is achieved:
- by configuring a normal stop as a DC injection stop (on disappearance of a run command or appearance of a stop command)
- by enabling a logic input
- by activating a command word bit

The DC value and the standstill braking time are adjustable.

■ **Motor thermal protection**
Motor thermal protection is provided by the drive:
□ directly, through PTC probes located in the motor windings
□ indirectly, via the integrated thermal relay. Indirect thermal protection is implemented via continuous calculation of its theoretical temperature rise.

The microprocessor calculates the theoretical temperature rise of the motor based on various elements:
□ the operating frequency
□ the current taken by the motor
□ the operating time
□ the maximum ambient temperature around the motor (40°C)
□ the type of motor ventilation (self-cooled or force-cooled)

Thermal protection can be adjusted from 0.2 to 1.5 times the nominal drive current. It must be adjusted to the nominal current indicated on the motor rating plate.

Note: *The motor thermal state memory returns to zero when the drive control section is switched off.*

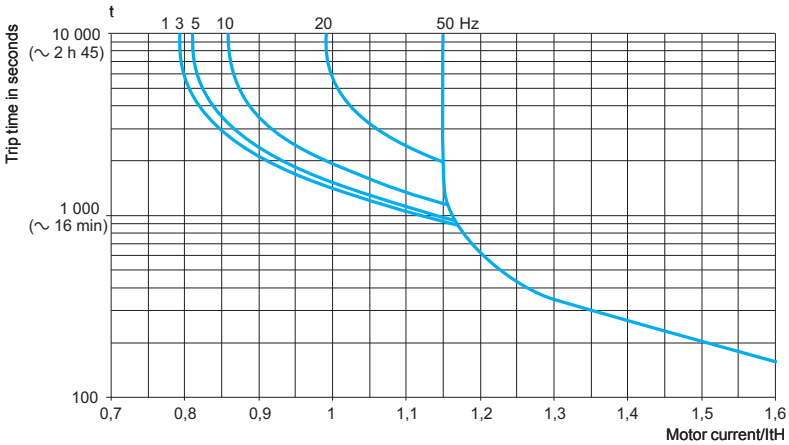

Motor thermal protection curves

□ Self-cooled motors:
The tripping curves vary with the motor frequency.

□ Force-cooled motors:
Only the 50 Hz tripping curve should be considered, whatever the motor frequency.

■ **Drive thermal protection**
The drive thermal protection is provided by a PTC probe mounted on the heatsink or integrated in the power module.

■ **IGBT thermal protection**
The drive manages the switching frequency intelligently according to the IGBT temperature.
If the drive's current rating is exceeded (e.g.: current higher than the nominal drive current for a zero stator frequency), an alarm is displayed and a timer increases for as long the alarm is present.

537370

RDY	Term	+0.00Hz	0.0A
4-20mA LOSS			
Fallback spd			
Spd maintain			✓
Ramp stop			
Fast stop			
DC injection			
			Quick

Configuration of the drive's fault response

■ Configuring the drive's fault response (fault management)

Different responses can be configured for the drive in the event of a resettable fault occurring:
- ◻ freewheel stop
- ◻ drive switches to the fallback speed
- ◻ drive maintains the speed at which it was operating when the fault occurred until the fault disappears
- ◻ stop on ramp
- ◻ fast stop
- ◻ DC injection stop
- ◻ no stop (alarm activated)

List of resettable faults:
- ◻ external fault
- ◻ speed feedback loss
- ◻ overspeed
- ◻ slipping
- ◻ output phase loss
- ◻ auto-tuning fault
- ◻ brake contactor feedback fault
- ◻ encoder coupling
- ◻ loss of 4-20mA
- ◻ PTC probe
- ◻ drive overheating
- ◻ motor overload if the thermal state is less than 100%
- ◻ line overvoltage
- ◻ overbraking
- ◻ current/torque limit
- ◻ IGBT overheating
- ◻ communication faults (Modbus, CANopen machine bus and other communication networks).

■ Resetting resettable faults

This can be used to remove the last fault using a logic input, command word bit or the STOP/RESET key on the graphic display terminal.
The restart conditions after a reset to zero are the same as those of a normal power-up.
List of resettable faults, see "Configuring the drive's fault response".
Line supply undervoltage and input phase loss faults are reset automatically when the line supply is restored.

Function suitable for applications where drives are difficult to access, such as when a drive is placed on a moving part.

■ General reset (disables all faults)

This function inhibits all faults, including thermal protection (forced operation), which can destroy the drive.

This function is suitable for applications where restarting may be crucial (conveyor in an oven, smoke extraction system, machines with solidifying products that need to be removed).
The function is enabled by a logic input.
Fault monitoring is active if the logic input is at state 1.
All faults are reset on a change of state ↑ the logic input.

Note: *Use of this function invalidates the guarantee.*

■ **Automatic restart**
This function enables the drive to be restarted automatically after it has locked in fault mode, provided the relevant fault has disappeared and the other operating conditions permit a restart.
This restart is performed by a series of automatic attempts separated by increasingly longer waiting periods of 1 s, 5 s, 10 s then 1 minute for the rest.
The options for the restart process's duration are 5, 10 and 30 min., 1, 2, 3 hours and an unlimited time.
If the drive has not restarted after the configured time, it will lock and the procedure is abandoned until it has been powered off and on again.

The faults which permit this type of restart are:
□ line overvoltage
□ motor thermal overload
□ drive thermal overload
□ DC bus overvoltage
□ line phase failure
□ external fault
□ loss of 4-20mA
□ PTC probe
□ serial link
□ current or torque limit
□ output phase loss
□ line voltage too low. For this fault, the function is always active, even if it is not configured.
□ fault caused by CANopen machine bus, Modbus serial link or other commmunication networks. These faults are reset automatically as soon as the command word or frequency reference is sent to the drive.
For these types of fault, the relay configured as a fault relay remains activated if the function is configured. The speed reference and direction of operation must be maintained for this function.

This function is suitable for machines or installations which are in continuous operation or are not monitored, and where a restart will not endanger equipment or personnel in any way.

■ **PTC probe protection**
The probes can be connected directly to the drive control card or to the I/O option cards.
The way in which a temperature fault is recorded by the drive can be configured:
□ permanent record
□ only recorded when the drive's power section is switched on
□ only recorded when the motor is running

■ **IGBT testing**
When enabled, this function tests every IGBT and the motor connections in order to detect a short-circuit or an open circuit. This test is run every time the drive is powered on and before each motor start.

This function must not be enabled with machines with fast cycles in order to preserve the time for recording run commands.

■ **Resetting operating time to zero**
The drive operating and power-up time can be reset.

■ **External fault**
This function can lead to the drive locking if a fault occurs in the machine.
This fault is flagged on the drive display unit. The fault is flagged if the signal is at 1 or 0, according to the function configuration.

■ **Line contactor control**
This can be used on each run command to close the line contactor and open it when the motor is no longer on. The drive control section must be powered without fail by an external 24 V ⎓ source.

This function must be used for simple sequences with a low number of Start/Stop operations (Start/Stop cycle longer than 60 seconds).

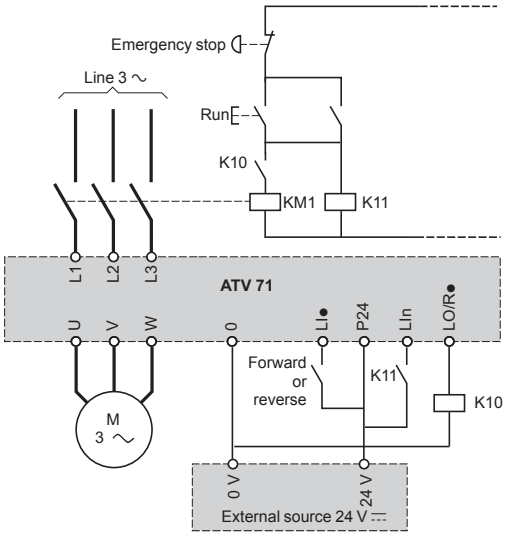

After a run command, if the line contactor is not closed the drive will lock after an adjustable period of time.

■ **Forced local mode**
Forced local mode imposes control via the terminals or graphic display terminal and disables all other control modes.
Switching to forced local mode may be activated via:
- a logic input
- a function key on the graphic display terminal

The following references and commands are available for forced local mode:
- references AI1, AI2, etc. and command via logic inputs
- reference and command via the graphic display terminal

Function compatibility table

■ **Configurable I/O**

Functions which are not listed in this table are fully compatible.
Stop functions have priority over run commands.
The selection of functions is limited:

- By the number of drive I/O which can be reassigned: if necessary, add an I/O extension card
- By the incompatibility of certain functions with one another

Functions	Operation on the references	+/- speed *(3)*	Management of limit switches	Preset speeds	PID regulator	Traverse control	Jog operation	Brake control
Operation on the references				↑	■		↑	
+/- speed *(3)*						■	■	
Management of limit switches					■			
Preset speeds	←						↑	
PID regulator	■		■			■	■	■
Traverse control		■			■		■	
Jog operation	←	■		←	■	■		■
Brake control					■		■	
Automatic catching a spinning load with speed detection (catch on the fly)								■
Control and integrity check of output contactor								■
DC injection stop								■
Fast stop								
Freewheel stop								
+/- speed around a reference					■	■	■	
High-speed hoisting					■	■	■	
Torque control	■ *(1)*	■ *(1)*		■ *(1)*	■ *(1)*	■ *(1)*	■ *(1)*	■ *(1)*
Load sharing					■			
Position control via limit switches					■			

(1) Torque control and the speed reference functions are only incompatible if torque control mode is active.
(2) Priority is given to the first of these two stop modes to be activated.
(3) Excluding special use with reference channel Fr2.

■ Incompatible functions
Compatible functions
Not applicable

Priority functions (functions which cannot be active at the same time)
← The arrow indicates which function has priority
↑ Example: The Freewheel stop function has priority over the Fast stop function.

Automatic catching a spinning load with speed detection (catch on the fly)	Control and integrity check of output contactor	Injection stop DC	Fast stop	Freewheel stop	+/- speed around a reference	High-speed hoisting	Torque control	Sharing load	Position control via limit switches
							■ (1)		
							■ (1)		
							■ (1)		
					■	■	■ (1)	■	■
					■	■	■ (1)		
					■	■	■ (1)		
■	■	■					■ (1)		
							■ (1)		
			■ (2)	↑					
		■ (2)		↑					
		←	←						
							■ (1)		
							■		■
■ (1)					■ (1)	■		■	■ (1)
							■		
						■ (1)	■		

PowerSuite software workshop

534513

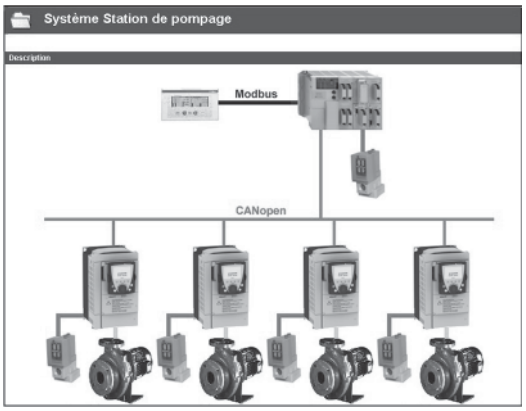

PowerSuite screen on PC

Presentation

The PowerSuite software workshop for PC is a user-friendly tool designed for setting up control devices for the following Telemecanique brand motors:
- TeSys U starter-controllers
- TeSys T motor management systems
- Altistart soft start/soft stop units
- Altivar variable speed drives
- Lexium 05 servo drives

It includes various functions designed for setup phases such as:
- Preparing configurations
- Start-up
- Maintenance

To facilitate start-up and maintenance, the PowerSuite software workshop is compatible with the Bluetooth® wireless link.

Functions *(1)*

Preparing configurations

The PowerSuite software workshop can be used on its own to generate the device configuration, which can be saved, printed and exported to office automation software.

The PowerSuite software workshop can also be used to convert an Altivar 58 or Altivar 58F drive configuration into one that is compatible with an Altivar 71.

533181

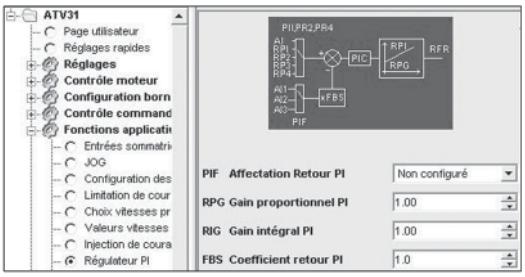

PowerSuite screen on PC
View of PI regulator function parameters

Start-up

When the PC is connected to the device, the PowerSuite software workshop can be used to:
- Transfer the generated configuration
- Adjust
- Monitor. This option has been enhanced with new functions such as:
  - The oscilloscope
  - The high-speed oscilloscope (minimum time base: 2 ms)
  - The FFT *(Fast Fourier Transform)* oscilloscope
  - Display of communication parameters
- Control
- Save the final configuration

Maintenance

To facilitate maintenance operations, the PowerSuite software workshop can be used to:
- Compare the configuration of a device currently being used with a saved configuration
- Manage the user's installed equipment base, in particular:
  - Organize the installed base into folders (electrical equipment, machinery, workshops, etc.)
  - Store maintenance messages
  - Facilitate Modbus TCP connection by storing the IP address

572708

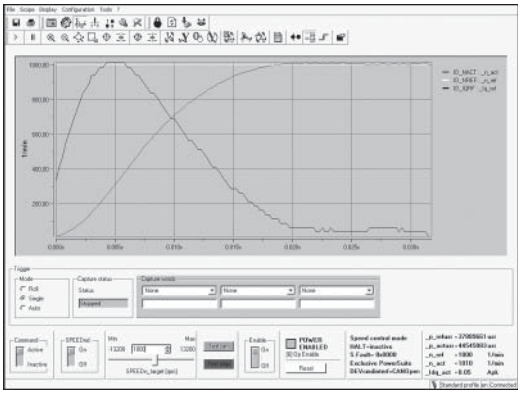

View of the FTT oscilloscope

User interface

The PowerSuite software workshop can be used to:
- Present the device parameters (arranged by function) in the form of illustrated views of diagrams or simple tables
- Customize the parameter names
- Create:
  - A user menu (choice of particular parameters)
  - Monitoring control panels with graphic elements (cursors, gauges, bar charts)
- Perform sort operations on the parameters
- Display text in five languages (English, French, German, Italian and Spanish). The language changes immediately and there is no need to restart the program.

It also features online contextual help:
- On the PowerSuite tool
- On the device functions by direct access to the user manuals

(1) Certain functions are not available for all devices. See the table of available functions, page 303.

References:
page 304

PowerSuite software workshop

Functions available for the PowerSuite software workshop

Functions not listed in the table are available for all devices.

Function available with devices	Controller	Starter-controller	Soft start/ soft stop unit	Drives				Servo drive
	TeSys T	TeSys U	ATS 48	ATV 11	ATV 31	ATV 61	ATV 71	LXM 05
Monitoring	■	■	■	□	■	■	■	■
Oscilloscope	□	□	□	□	■	■	■	■
High-speed oscilloscope	□	□	□	□	□	■	■	■
FFT oscilloscope	□	□	□	□	□	■	■	■
Display of communication parameters	■	□	□	□	□	■	■	■
Control	□	□	■	□	■	■	■	■
Customization of parameter names	□	□	□	■	■	■	■	■
Creation of a user menu	□	□	□	■	■	■	■	■
Creation of monitoring control panels	□	□	□	□	■	■	■	■
Sort operation on parameters	□	□	□	■	■	■	■	■
Custom logic editor	■	□	□	□	□	□	□	□

■ Functions available
□ Functions not available

536845

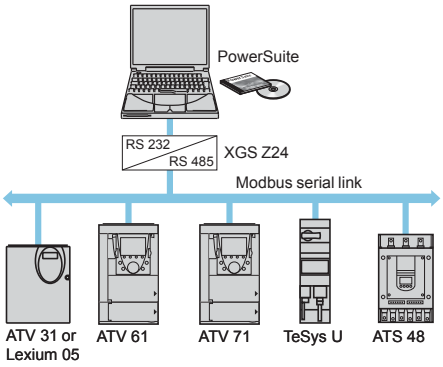

Modbus multidrop connection

536846

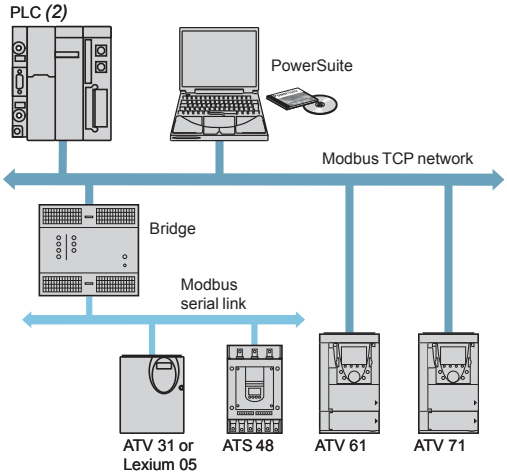

Modbus TCP connection

Connections *(1)*

Modbus serial link

The PowerSuite software workshop can be connected directly to the device terminal port or Modbus network port via the serial port on the PC.

Two types of connection are possible:
- With a single device (point-to-point connection), use a VW3 A8 106 PC serial port connection kit.
- With a number of devices (multidrop connection), use the XGS Z24 interface.

Modbus TCP communication network

The PowerSuite software workshop can be connected to a Modbus TCP network. In this case, the devices can be accessed:
- Using a VW3 A3 310 communication card for the Altivar 61and 71 drives
- Using a TSX ETG 100 Modbus TCP/Modbus gateway

Bluetooth® wireless link

The PowerSuite software workshop can communicate via a Bluetooth® radio link if the device is equipped with a Bluetooth® Modbus VW3 A8 114. The adapter plugs into the device connector terminal port or Modbus network port and has a range of 10 m (class 2).

If the PC does not feature Bluetooth® technology, use the VW3 A8 115 USB - Bluetooth® adapter.

Remote maintenance

A simple Modbus TCP connection is all that is required for the PowerSuite software workshop to support remote monitoring and diagnostics.
When devices are not connected to the Modbus TCP network, or it is not directly accessible, various remote transmission solutions may be used instead (modem, teleprocessing gateway, etc.). Please consult your Regional Sales Office.

(1) Please refer to the compatibility table on page 305.
(2) Please refer to our specialist "Automation platform Modicon Premium and Unity - PL7 software" and "Automation platform Modicon TSX Micro - PL7 software" catalogues.

Presentation: page 302
References: page 304

PowerSuite software workshop

PowerSuite software workshop

536848

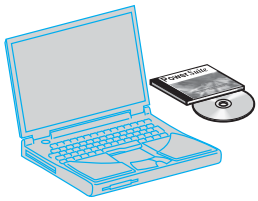

VW3 A8 104

536847

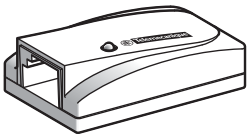

VW3 A8 114

Description	Composition	Reference	Weight kg
PowerSuite CD-ROM	■ 1 program for PC in English, French, German, Italian and Spanish ■ Variable speed drive, starter and servo drive technical manuals	**VW3 A8 104**	0.100
PowerSuite update CD-ROM *(1)*	■ 1 program for PC in English, French, German, Italian and Spanish ■ Variable speed drive and starter technical manuals	**VW3 A8 105**	0.100
PC serial port connection kit for point-to-point Modbus connection	■ 1 x 3 m cable with 1 RJ45 connector on starter-controller or drive side and 1 RS 232/RS 485 converter with 1 9-way female SUB-D connector on PC side ■ For the ATV 11 drive: 1 converter with one 4-way male SUB-D connector and 1 RJ45 connector ■ For ATV 38/58/58F drives: 1 RJ45/9-way male SUB-D adapter	**VW3 A8 106**	0.350
RS 232/RS 485 interface for multidrop Modbus connection	1 Modbus multidrop converter for connection to screw terminals. Requires a 24 V ⎓ (20...30 V), 20 mA power supply *(2)*.	**XGS Z24**	0.105
Modbus-Bluetooth® *adapter* *(3)*	■ 1 Bluetooth® adapter (10 m range, class 2) with 1 RJ45 connector ■ For PowerSuite: 1 x 0.1 m cable with 2 RJ45 connectors ■ For TwidoSoft: 1 x 0.1 m cable with 1 RJ45 connector and 1 mini DIN connector ■ For ATV 38/58/58F drives: 1 RJ45/9-way male SUB-D adapter	**VW3 A8 114**	0.155
USB - Bluetooth® adapter for PC	This adapter is required in the case of a PC that does not feature Bluetooth® technology. It is connected to a USB port on the PC. Range of 10 m (class 2).	**VW3 A8 115**	0.290

(1) Updates a version ≥ V1.40 with the latest available version. For versions < V1.40, you should order the PowerSuite CD-ROM, VW3 A8 104.
(2) Please refer to the "Interfaces, I/O splitter boxes and power supplies" catalogue.
(3) Can also be used to communicate between a Twido PLC and the TwidoSoft software workshop.

Presentation:
page 302

Functions:
pages 302 and 303

Compatibility of PowerSuite software workshop with the following devices *(1)*

Connection	Controller	Starter-controller	Soft start/ soft stop unit	Drives				Servo drives		
	TeSys T	TeSys U *(2)*	ATS 48	ATV 11	ATV 31	ATV 61	ATV 71	LXM 05A	LXM 05B	LXM 05C
Modbus	V2.5	V1.40	V1.30	V1.40	V2.0	V2.3	V2.2	V2.2	V2.4	V2.5
Modbus TCP (device equipped with Modbus TCP card)						V2.3	V2.2			
Modbus TCP via Modbus TCP/Modbus gateway			V1.50		V2.0	V2.3	V2.2	V2.2	V2.4	V2.5
Bluetooth®			V2.2		V2.2	V2.3	V2.2	V2.2	V2.4	V2.5

Compatible software versions

Incompatible software versions

Hardware and software environments

The PowerSuite software workshop can operate in the following PC environments and configurations:

- Microsoft Windows® XP SP1, SP2,
- Pentium III, 800 MHz, hard disk with 300 MB available, 128 MB RAM
- SVGA or higher definition monitor

(1) Minimum software version
(2) TeSys U starter-controller without communication module or with Modbus LUL C031, C032 or C033 communication module

Starters, drives and communication

Modbus TCP network

Transparent Ready concept

Presentation

Introduced by Schneider Electric, the Transparent Ready concept enables transparent communication between control system devices, production and management. Network technologies and the associated new services are used to share and distribute data between sensors, PLCs, workstations and third-party devices in an increasingly efficient manner.
Web servers embedded in the network components and control system devices can be used to:
- Access configuration data transparently
- Perform remote diagnostics
- Incorporate simple human/machine interface functions

This concept is based on the Modbus TCP industrial standard which proposes a single network that meets most communication requirements from sensors/actuators through to production management systems.
Where a variety of communication systems are usually required, Transparent Ready standard technologies can result in significant cost savings in the areas of definition, installation, maintenance or training.

Transparent Ready is based on:
- Modbus TCP-based services meeting control system requirements in terms of functions, performance and quality of services
- Products including several ranges of PLC, distributed I/O, industrial terminals, variable speed drives, gateways and an increasing number of partner products
- The ConneXium range of cabling accessories: hubs, switches, cables adapted to the environment and to the requirements of industrial conditions.

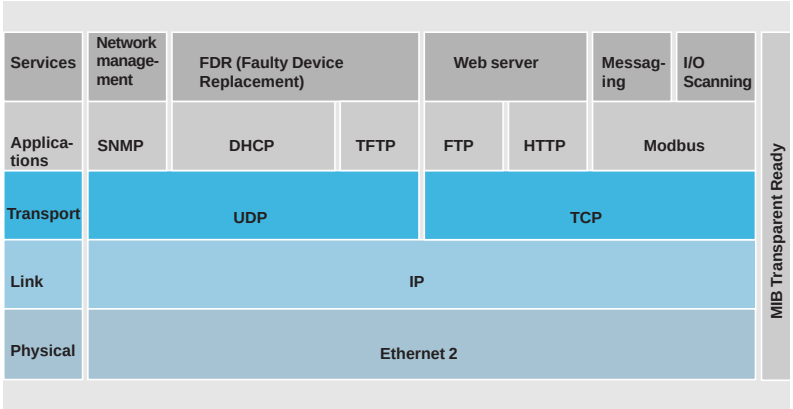

Services supported by Altivar 61 and Altivar 71 drives

The Altistart 48 soft start/soft stop unit and the Altivar 31 variable speed drive are connected to the Modbus TCP network using a gateway TSX ETG 100 Ethernet/Modbus.

Altivar 61 and Altivar 71 variable speed drives are connected to the Modbus TCP network using a VW3 A3 310 communication card.
This card comes with a basic web server, which users can adapt completely according to the application (Java or FactoryCast development tool).

Characteristics: page 307
Functions: pages 307 to 309
Connections: page 310
References: pages 310 and 311

Starters, drives and communication

Modbus TCP network

Transparent Ready concept

Characteristics

Structure	Topology	Industrial local area network conforming to ANSI/IEEE 802.3 (4th edition 1993-07-08) Star network	
	Transmission mode	Manchester baseband. Half-duplex or full-duplex	
	Data rate	10/100 Mbps with automatic recognition	
	Medium	STP double shielded twisted pair, impedance 100 W ± 15 W for 10 BASE-T or category 5 Ethernet cable, conforming to standard TIA/EIA-568A	
	Length of network	100 m maximum between hub or switch and a station	
Type of device		**ATS 48, ATV 31**	**ATV 61, ATV 71**
Type of interface		**TSX ETG 100**	**VW3 A3 310**
Universal services		SNMP	HTTP, BOOTP, DHCP, FTP, TFTP, SNMP
Transparent Ready services		Modbus Messaging	Modbus messaging, IO Scanning, FDR

Universal services

HTTP

HTTP, “Hypertext Transfer Protocol” (RFC 1945), is a protocol used to transmit web pages between a server and a browser. HTTP has been used on the Web since 1990.

Web servers embedded in control system devices are at the heart of the Transparent Ready concept and provide easy access to devices anywhere in the world using a standard web browser such as Internet Explorer or Netscape Navigator.

BOOTP/DHCP

BOOTP/DHCP (RFC 1531) is used to supply (client) devices automatically with IP addresses and parameters. This avoids having to manage the addresses of each device individually by transferring their management to a server.
BOOTP identifies the client device by its Ethernet MAC address. This address is unique to each device and must be entered in the server each time the device is changed.
DHCP “Dynamic Host Configuration Protocol” identifies the client device by a name in plain language (“Device Name”) which is maintained throughout the application: e.g. “Conveyor 23”.

Altivar 61 and Altivar 71 drives can be given a name (“Device Name”) by the terminal or the PowerSuite software workshop.
The FDR (“Faulty Device Replacement”) service uses the standard DHCP and TFTP protocols.

FTP/TFTP

FTP, “File Transfer Protocol” (RFCs 959, 2228 and 2640), and TFTP, “Trivial File Transfer Protocol” (RFC 1123), are used to exchange files with devices.

Transparent Ready devices implement FTP for downloading firmware or custom web pages.
The FDR (“Faulty Device Replacement”) service uses the standard DHCP and TFTP protocols.

SNMP

The Internet community has developed the SNMP standard, “Simple Network Management Protocol” (RFCs 1155, 1156 and 1157), to support the management of the various network components by means of a single system. The network management system can exchange data with SNMP agent devices. This function allows the manager to view the status of the network and devices, to modify their configuration and to return alarms in the event of a fault.

Transparent Ready devices are compatible with SNMP and can be integrated naturally into a network administered via SNMP.

Presentation: page 306
Connections: page 310
References: pages 310 and 311

Starters, drives and communication

Modbus TCP network

Transparent Ready concept

Transparent Ready services

Modbus communication standard

Modbus, the industry communication standard since 1979, has been ported to Ethernet TCP/IP, the backbone of the Internet revolution, to create Modbus TCP, a totally open protocol on Ethernet. There is no need for any proprietary component, nor the purchase of a licence in order to develop a connection to Modbus TCP.
This protocol can easily be ported to any device supporting a standard TCP/IP communication stack. The specifications can be obtained free of charge from the website: www.modbus.org.

Modbus TCP, simple and open

The Modbus application layer is very simple and universally known. Thousands of manufacturers are already implementing this protocol. Many have already developed a Modbus TCP connection and numerous products are currently available.
The simplicity of Modbus TCP enables any small field device, such as an I/O module, to communicate on Ethernet without the need for a powerful microprocessor or a large amount of internal memory.

Modbus TCP, high performance

Thanks to the simplicity of its protocol and the fast Ethernet throughput data rate of 100 Mbps, Modbus TCP achieves excellent performance. This means that this type of network can be used in realtime applications such as I/O Scanning.

I/O Scanning service

Schematic diagram

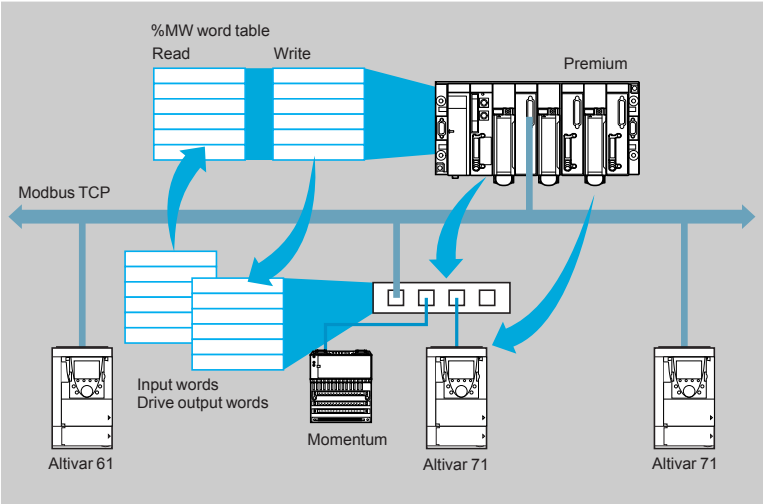

Altivar 61 and Altivar 71 drives accept the I/O Scanning service generated by:
- ■ The following automation platforms:
  - □ Premium equipped with a TSX ETY 410/5101 module
  - □ Quantum
  - □ Momentum M1E
- ■ A PC equipped with Modbus communication software with the I/O scanner function.

This service is used to manage the exchange of remote I/O on the Ethernet network after simple configuration and without the need for special programming.

The drive I/O are scanned transparently by means of read/write requests according to the Modbus Master/Slave protocol on the TCP/IP profile.

The I/O Scanning service can be configured, activated or deactivated by:
- ■ The PowerSuite software workshop
- ■ The standard web server.

Presentation: page 306
Characteristics: page 307
Connections: page 310
References: pages 310 and 311

Starters, drives and communication

Modbus TCP network

Transparent Ready concept

Transparent Ready services (continued)

Faulty Device Replacement (FDR) service

The FDR service uses standard DHCP and TFTP technologies with the aim of simplifying the maintenance of Ethernet devices.
It is used to replace a faulty device with a new product, ensuring its detection, reconfiguration and automatic restarting by the system, without the need for any tricky manual intervention.

The main steps are:
- A device using the FDR service becomes faulty
- A similar device is taken out of the maintenance reserve base, preconfigured with the “Device_name” of the faulty device, then reinstalled on the network.
- The FDR server (which can be a Quantum or Premium PLC Ethernet module) detects the new arrival, configures it with its IP address and transfers all its configuration parameters to it.
- The substituted device checks that the parameters are fully compatible with its own characteristics, then switches to operational mode.

Web server

The Ethernet card in Altivar 61 and Altivar 71 drives incorporates a standard web server, in English.
The functions provided by this web server require no special configuration or programming of the PC supporting the web browser. Using a password, two levels of access to the web server can be defined: read-only or modification.

The standard web server provides access to the following functions:
- Altivar Viewer
- Data Editor
- Ethernet Statistics
- Security
- Etc.

The standard web server can be adapted or replaced by a customized web server depending on the requirements of the application and downloaded via FTP.
Knowledge of the HTTP protocol and Java technology are required to be able to create or modify a web server.

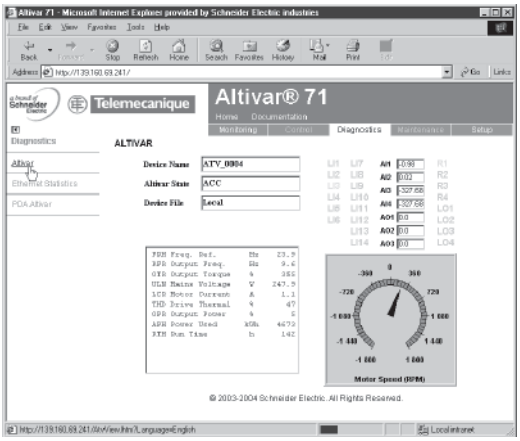

Altivar Viewer

Starters, drives and communication

Modbus TCP network

Transparent Ready concept

Connections

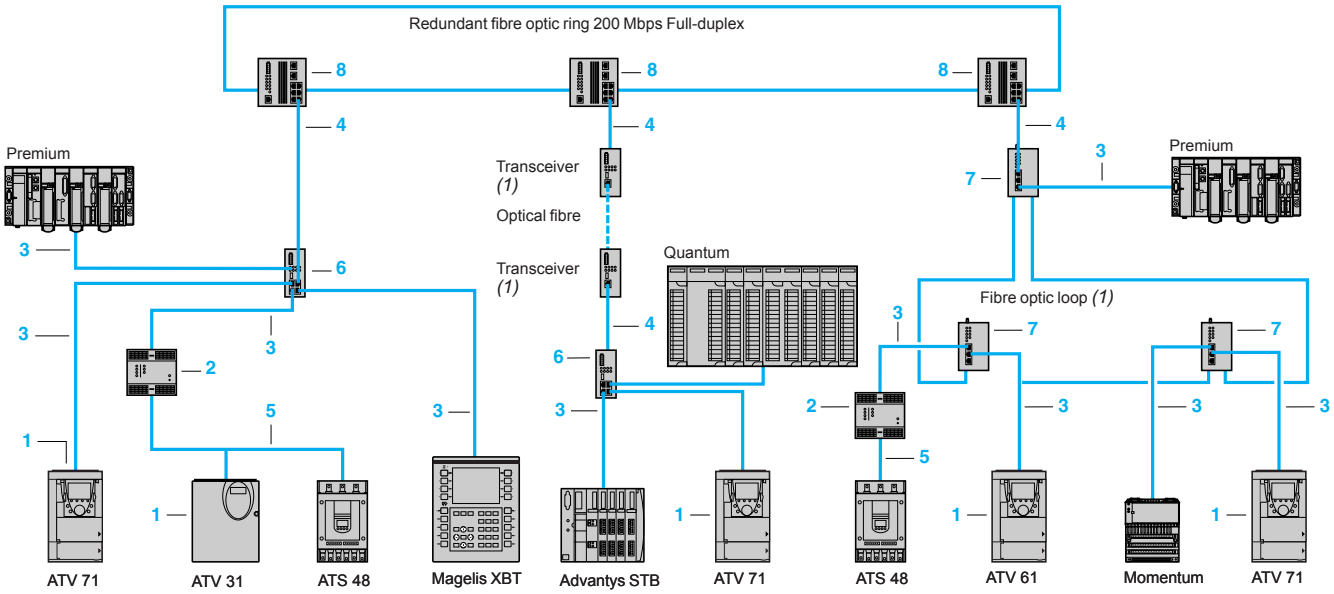

Modbus TCP network connection elements *(1)*

Communication interfaces

Description	Use	Item No.	Reference	Weight kg
Communication card equipped with an RJ45 Modbus TCP 10/100 Mbps Class C20	Variable speed drives ATV 61, ATV 71	1	**VW3 A3 310**	0.300
Gateway/router Modbus Ethernet Class B10	ATS 48 soft start/soft stop units ATV 31 variable speed drives	2	**TSX ETG 100**	–
Configuration kit	Used to configure the gateway via the Ethernet or RS 232 port. Consists of an RJ45/9-way SUB-D adapter and a CAT5 crossover cable, length 3 m	–	**TCS EAK 0100**	–
PoE power supply (conforming to IEEE 802.3af)	Used to supply the gateway via Ethernet CAT5 cable. Power supply connected via daisy-chain connection. Includes mains cable (Australia, Europe, UK and USA)	–	**TCS EAQ 0100**	–

TSX ETG 100

ConneXium cordsets

Description	Use From	Use To	Item No.	Length m	Reference *(2)*	Weight kg
Straight shielded twisted pair cordsets equipped with 2 RJ45 connectors	ATV 61 or ATV 71 (+ VW3 A3 310 communication card) or any other equipment terminal	Hubs 499 N●H 1●● ●0, switches 499 N●S ●●● 0●, TCS ESM083F2●●●	3	2	**490 NTW 000 02**	–
				5	**490 NTW 000 05**	–
				12	**490 NTW 000 12**	–
				40	**490 NTW 000 40**	–
				80	**490 NTW 000 80**	–
Crossed shielded twisted pair cordsets equipped with 2 RJ45 connectors	Hubs 499 NEH 1●● ●0, switches 499 N●S 251 02, TCS ESM083F2C●0, transceivers *(1)*	Hubs 499 NEH 1●● ●0, switches 499 N●S 251 02, TCS ESM083F2C●0, transceivers *(1)*	4	5	**490 NTW 000 05**	–
				15	**490 NTC 000 15**	–
				40	**490 NTC 000 40**	–
				80	**490 NTC 000 80**	–
Cordset for Modbus serial link equipped with one RJ45 connector and one stripped end	ATS 48, ATV 31	Gateway Modbus/ Ethernet TSX ETG 100	5	3	**VW3 A8 306 D30**	–

(1) To order other Modbus TCP network connection elements, please refer to the "Ethernet TCP/IP, Transparent Ready" catalogue.

*(2) Cable conforming to EIA/TIA-568 category 5 and IEC 1180/EN 50 173, class D. For UL and CSA 22.1 approved cables, add the letter **U** at the end of the reference. Example: 490 NTW 000 02 becomes **490 NTW 000 02U**.*

Presentation: page 306
Characteristics: page 307
Functions: pages 307 to 309

Modbus TCP network connection elements (1) (continued)

ConneXium Hubs

Description	Number of ports: Copper cable	Number of ports: Optical fibre	Item No.	Reference	Weight kg
Hub - 10 Mbps twisted pair 10BASE-T ports for copper cable, shielded RJ45 connectors	4	–	6	**499 NEH 104 10**	0.530
Hub - 100 Mbps twisted pair 100BASE-TX ports for copper cable, shielded RJ45 connectors	4	–	6	**499 NEH 141 00**	0.240
Hub - 10 Mbps twisted pair and multimode optical fibre 10BASE-T ports for copper cable, shielded RJ45 connectors 10BASE-FL ports for optical fibre, ST connectors (BFOC)	3	2	7	**499 NOH 105 10**	0.900

571200~1

499 NEH 141 00

ConneXium Switches

Description	Number of ports: Copper cable	Number of ports: Optical fibre	Item No.	Managed	Reference	Weight kg
Optimized switch, twisted pair 10BASE-T/100BASE-TX copper ports for copper cable, shielded RJ45 connectors	5	–	–	no	**499 NES 251 00**	0.190
Switches, twisted pair 10BASE-T/100BASE-TX ports for copper cable, shielded RJ45 connectors	8	–	–	no	**499 NES 181 00**	0.230
	8	–	–	yes	**TCS ESM083F23F0**	–
Switches, twisted pair and multimode optical fibre 10BASE-T/100BASE-TX ports for copper cable, shielded RJ45 connectors. 100BASE-FX ports for optical fibre, SC connectors	4	1	–	no	**499 NMS 251 01**	0.330
	3	2	8	no	**499 NMS 251 02**	0.335
	6	2	8	yes	**TCS ESM083F2CU0**	–
Switches, twisted pair and single-mode optical fibre 10BASE-T/100BASE-TX ports, for copper cable, shielded RJ45 connectors. 100BASE-FX ports, for optical fibre, SC connectors	4	1	–	no	**499 NSS 251 01**	0.330
	3	2	8	no	**499 NSS 251 02**	0.335
	6	2	8	yes	**TCS ESM083F2CS0**	–

571385~1

499 NES 251 00

571829~1

499 NMS 251 02

(1) To order other Modbus TCP network connection elements, please refer to the "Ethernet TCP/IP, Transparent Ready" catalogue.

Starters, drives and communication

Communication via Fipio bus

Presentation

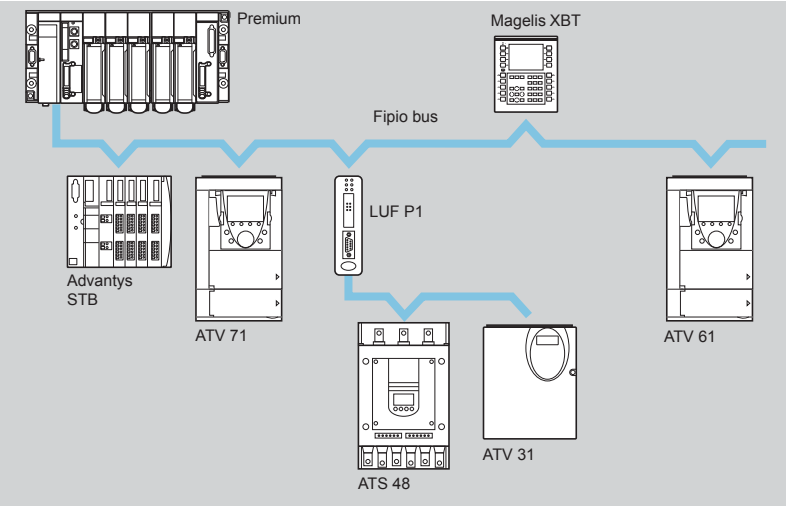

The Fipio fieldbus is a standard means of communication between control system components, and conforms to the World FIP standard.
A Premium PLC (bus manager) can control 127 devices (agents) over a maximum distance of 15 km.
The Fipio bus manager is integrated in the PLC processor.

The Altistart 48 soft start/soft stop unit and the Altivar 31 variable speed drive can be connected to the Fipio bus via an LUF P1 Fipio/Modbus gateway.

Altivar 61 and Altivar 71 drives can be connected to the Fipio bus via a communication card VW3 A3 311.

The following devices can also be connected to the Fipio bus:
- TSX Micro *(2)* or Premium Agent function *(1)* PLCs
- The CCX 17 operator panel *(2)*
- The Magelis XBT-F terminal with graphic screen *(3)*
- The Magelis iPC industrial PC *(3)*
- Advantys STB IP 20 distributed I/O *(4)*
- Discrete, analog or application-specific Momentum distributed I/O *(5)*
- Discrete or analog (IP 20) TBX distributed I/O *(1)*
- TBX discrete (IP 65) or TSX E●F (IP67) dust and damp proof distributed I/O *(1)*
- The TBX SAP 10 Fipio/AS-Interface gateway *(1)*
- The LUF P1 Fipio/Modbus gateway
- A PC terminal
- Partner products in the Collaborative Automation programme

(1) Please consult our "Automation Platform Modicon Premium – Unity & PL7 software" specialist catalogue.
(2) Please consult our "Automation platform Modicon TSX Micro – PL7 software" specialist catalogue".
(3) Please consult our "Human-Machine interfaces" specialist catalogue.
(4) Please consult our "Distributed I/O Advantys STB" specialist catalogue.
(5) Please consult our "Modicon Momentum Automation platform" specialist catalogue.

Characteristics: page 313
Connections: page 314
References: pages 314 and 315

Starters, drives and communication

Communication via Fipio bus

Characteristics

Structure	Topology	Industrial bus conforming to the World FIP standard Subscribers linked via daisy-chain or tap junctions	
	Access method	Producer/consumer principle Bus management by a fixed arbitrator (bus manager)	
	Transmission mode	Baseband physical layer on shielded twisted pair, according to standard NF C 46-604	
	Data rate	1 Mbps	
	Medium	Shielded twisted pair 150 Ω Optical fibre 62.5/125 with the use of electrical/fibre optic repeaters	
	Number of subscribers	32 maximum per segment 1 manager + 127 agents maximum over all segments The number of Fipio agents is limited by the memory capacity of Premium processors (62 Altivar drives maximum) *(1)*	
	Number of segments	Unlimited in tree or star architectures Limited to 5 cascaded segments The link between 2 subscribers may cross 4 electrical or electrical/fibre optic repeaters maximum	
	Length of bus	15,000 m maximum 1,000 m maximum without repeater for an electrical segment 5,000 m maximum for 5 electrical segments 3,000 m maximum for 1 fibre optic segment	
Type of device		**ATS 48, ATV 31**	**ATV 61, ATV 71**
Type of interface		**LUF P1**	**VW3 A3 311**
Profile		FED C 32P	FED C 32
Control and adjustment		26 configurable words	8 configurable words (communication scanner)
Monitoring		26 configurable words	8 configurable words (communication scanner)
Configuration and adjustment		1 indexed word Read/write access to all functions by the PLC application program	

(1) Please consult our "Automation Platform Modicon Premium – Unity & PL7 software" specialist catalogue.

Presentation: page 312
Connections: page 314
References: pages 314 and 315

Starters, drives and communication

Communication via Fipio bus

Fipio wiring system

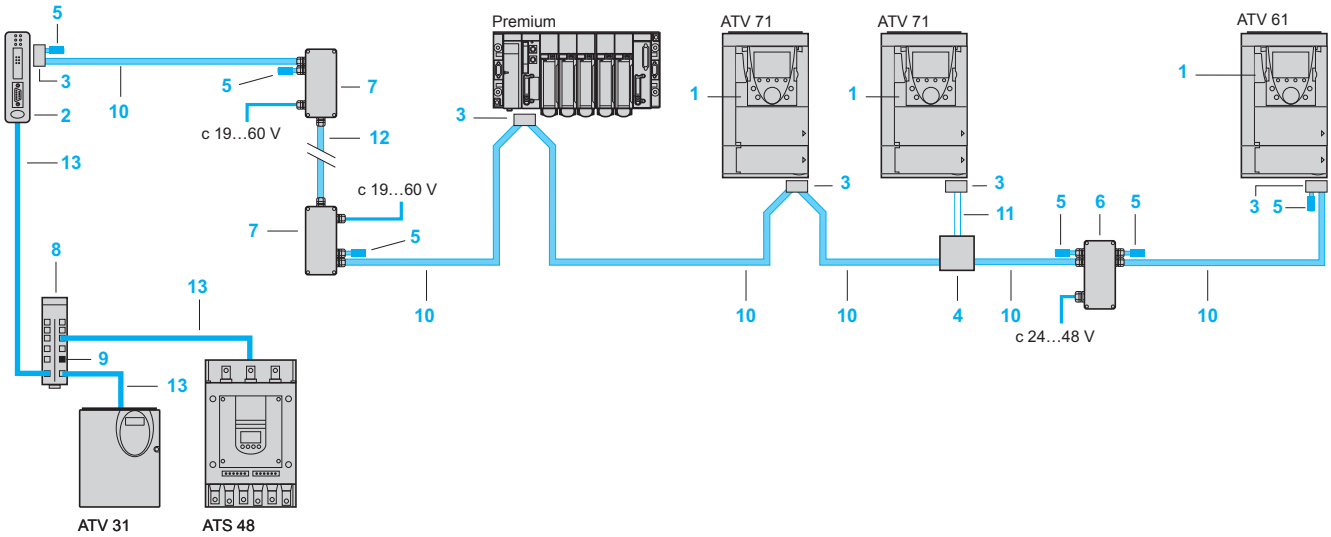

Elements for connecting the Fipio bus and a Premium PLC *(1)*

LUF P1

Cards and gateway

Description	Used for	No.	Reference	Weight kg
Standard Fipio card The card is equipped with a 9-way male SUB-Dconnector which can take a TSX FP ACC12 connector with a TSX FP CA●00 trunk cable or TSX FP CC●00 drop cable. This card should be used for new installations. It is also used to replace an ATV 58 or ATV 58F equipped with a VW3 A58 311 card by an ATV 71.	ATV 61 ATV 71	1	**VW3 A3 311**	0.300
Substitution Fipio card The card is equipped with a 9-way male SUB-D connector which can take a TSX FP ACC12 connector with a TSX FP CA●00 trunk cable or TSX FP CC●00 drop cable. This Fipio communication card is reserved for replacing an ATV 58 or ATV 58F equipped with a VW3 A58 301 card by an ATV 71.	ATV 71	1	**VW3 A3 301**	0.300
Fipio/Modbus gateway The gateway is equipped with: ■ 1 Fipio 9-way male SUB-D connector which can take a TSX FP ACC12 connector for use with a TSX FP CA●00 trunk cable or TSX FPCC●00 drop cable ■ 1 RJ45 connector for Modbus for connection with the VW3 A8 306 R●● cable. Fit an external 24 V ⎓ power supply, 100 mA minimum, to be ordered separately *(2)*.	ATS 48 ATV 31	2	**LUF P1**	0.240

(1) To order other elements for connection to the Fipio bus, please consult our "Automation platform Modicon Premium – Unity & PL7 software" specialist catalogue.
(2) Please consult our "Power supplies, splitter blocks and interfaces" specialist catalogue.

Presentation: page 312
Characteristics: page 313

Elements for connecting the Fipio bus and a Premium PLC (continued) *(1)*

Accessories

Description	Use	No.	Unit reference	Weight kg
Female connector for device with 9-way female SUB-D connector (polycarbonate, IP 20)	Connection via daisy-chain or tap junctions. For ATV 61, ATV 71, gateway LUF P1 and Premium PLC	3	**TSX FP ACC12**	0.040
Tap junction (polycarbonate, IP 20)	Trunk cable tap link	4	**TSX FP ACC14**	0.120
Fipio line terminators (sold in lots of 2)	Connector, tap junction and repeater	5	**TSX FP ACC7**	0.020
Electrical repeater (IP 65) Power supply 24...48 V ⎓, 150 mA *(2)*	Increases the length of the bus while enabling connection of 2 segments of 1000 m maximum	6	**TSX FP ACC6**	0.520
Electrical/fibre optic repeater (IP 65) Power supply 19...60 V ⎓, 210 mA *(2)*	Used for connection (via a patch panel) of an electrical segment (1000 m max.) and a fibre optic segment (3000 m max.)	7	**TSX FP ACC8M**	0.620
Modbus splitter block equipped with 10 RJ45 connectors and 1 screw terminal	Used to connect an ATV 31, ATS 48 on the LUP P1 gateway	8	**LU9 GC3**	0.500
Modbus line terminators *(3)*	LU9 GC3 Modbus splitter block	9	**VW3 A8 306 RC**	0.010
FIP wiring test tool	Used to test each section of a network segment	–	**TSX FP ACC9**	0.050

Connecting cables *(1)*

Description	Use: From	Use: To	No.	Length m	Reference	Weight kg
Trunk cables 8 mm, 1 shielded twisted pair 150 Ω. In standard atmosphere *(4)* and inside buildings	Connector TSX FP ACC12, junction box TSX FP ACC14, repeaters TSX FP ACC6, ACC8M	Connector TSX FP ACC12, junction box TSX FP ACC14, repeater TSX FP ACC6	10	100	**TSX FP CA100**	5.680
				200	**TSX FP CA200**	10.920
				500	**TSX FP CA500**	30.000
Trunk cables 9.5 mm, 1 shielded twisted pair 150 Ω. In harsh environments *(5)*, outside buildings or in mobile installations *(6)*	Connector TSX FP ACC12, junction box TSX FP ACC14, repeaters TSX FP ACC6, ACC8M	Connector TSX FP ACC12, junction box TSX FP ACC14, repeater TSX FP ACC6	10	100	**TSX FP CR100**	7.680
				200	**TSX FP CR200**	14.920
				500	**TSX FP CR500**	40.000
Drop cables 8 mm, 2 shielded twisted pairs 150 Ω. In standard atmosphere *(4)* and inside buildings	Connector TSX FP ACC12	Junction box TSX FP ACC14	11	100	**TSX FP CC100**	5.680
				200	**TSX FP CC200**	10.920
				500	**TSX FP CC500**	30.000
Fibre optic jumper Double optical fibre 62.5/125	Repeater TSX FP ACC8M	Patch panel	12	2	**TSX FP JF020**	0.550
Cables for Modbus bus 2 RJ45 connectors	LUF P1 gateway, ATS 48, ATV 31	LU9 GC3 Modbus splitter block	13	0.3	**VW3 A8 306 R03**	0.025
				1	**VW3 A8 306 R10**	0.060
				3	**VW3 A8 306 R30**	0.130

Documentation

The manuals and quick reference guides for starters and variable speed drives, as well as the user manuals for communication gateways, are available on the web site: www.telemecanique.com.

(1) To order other elements for connection to the Fipio bus, please consult our "Automation platform Modicon Premium – Unity & PL7 software" specialist catalogue.
(2) Please consult our "Power supplies, splitter blocks and interfaces" specialist catalogue.
(3) Sold in lots of 2.
(4) Standard environment:
- no particular environmental constraints
- operating temperature between +5°C and +60°C
- fixed installation
(5) Harsh environment:
- withstand to hydrocarbons, industrial oils, detergents, solder splashes
- relative humidity up to 100%
- saline atmosphere
- significant temperature variations
- operating temperature between -10°C and +70°C
(6) Mobile installation: cables in accordance with standard VDE 472 part 603/H:
- use on a cable-carrier chain with bending radius 75 mm minimum
- use on a gantry, provided that operating conditions such as acceleration, speed, length, etc, are adhered to: please consult your Regional Sales Office
- use not permitted on robots or multi-axis applications.

Starters, drives and communication

Communication via Modbus serial link

Presentation

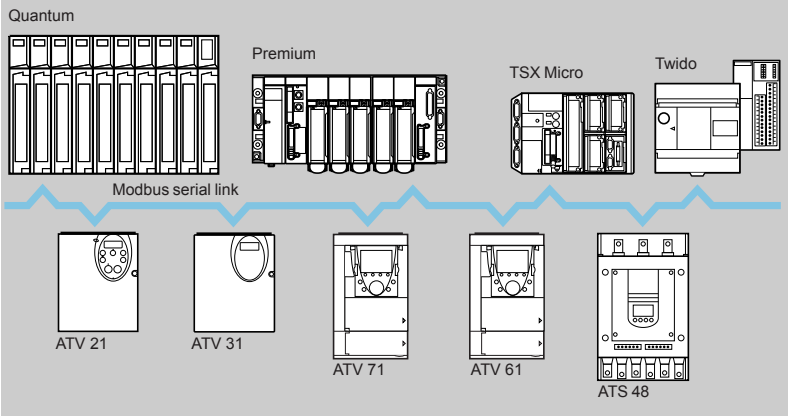

Modbus is a master/slave protocol.

Two exchange mechanisms are possible:
■ Request/response: The request from the master is addressed to a given slave. The master then waits for the response from the slave which has been interrogated.
■ Broadcasting: The master broadcasts a request to all the slave stations on the serial link, which execute the command without transmitting a response.

The Altistart 48 soft start/soft stop units and the Altivar 21, Altivar 31, Altivar 61 and Altivar 71 variable speed drives have the Modbus protocol integrated as standard.

The Altistart 48 soft start/soft stop unit and the Altivar 21 and Altivar 31 variable speed drives are connected to the Modbus serial link via their terminal ports.

The Altivar 61 and Altivar 71 variable speed drives have 2 integrated communication ports:
■ A terminal port for connecting the graphic display terminal or an industrial HMI terminal (Magelis type)
■ A Modbus serial link port
As an option, they can also be equipped with a VW3 A3 303 Modbus/Uni-Telway communication card which offers additional characteristics (4-wire RS 485, ASCII mode, etc.).

Characteristics

Type of device			**ATS 48**	**ATV 21**	**ATV 31**	**ATV 61, ATV 71**		
Type de connection			**Terminal port**				**Modbus serial link port**	**Communication card**
Structure	Connector		RJ45	RJ45	RJ45	RJ45	RJ45	9-way female SUB-D
	Topology		Serial link					
	Physical interface		2-wire RS 485					2-wire or 4-wire RS 485
	Access method		Master/slave					
	Transmission mode		RTU					RTU or ASCII
	Data rate	38.4 Kbps	–	–	–	–	●	–
		19.2 or 9.6 Kbps	●	●	●	●	●	●
		4.8 Kbps	●	–	●	–	●	●
	Medium		Double shielded twisted pair					
	Number of subscribers		18, 27 or 31 slaves, depending on polarization *(1)*					
	Type of polarization		4.7 kΩ pulldown resistors	No pulldown				Configurable. No pulldown or 4.7 kΩ pulldown resistors
	Length of serial link		1000 or 1300 m excluding tap links, depending on polarization *(1)*					
	Tap link		3 or 20 m maximum, depending on polarization *(1)*					

(1) See the configuration table on page 317.

Connections: pages 317 and 318
References: pages 317 to 319

Starters, drives and communication

Communication via Modbus serial link

Configuration on the basis of polarization

The specification of the physical layer provided by standard RS 485 is incomplete.
Various polarization diagrams can therefore be applied depending on the environment in which the equipment is to be used.
The Modbus standard specifies the polarization exactly *(1)*.

		Master	
		With or without polarization 4.7 kΩ	**With polarization 470 Ω**
Slave	**Without polarization**	Configuration not recommended.	Modbus type configuration 31 slaves. Length of serial link: 1300 m Tap link: 3 m maximum RC line terminators (R =120 Ω, C = 1 nF)
	With polarization 4.7 kΩ	Uni-Telway type configuration 27 slaves Length of serial link: 1000 m Tap link: 20 m maximum RC line terminators (R =120 Ω, C = 1 nF)	Mixed configuration 18 slaves Length of serial link: 1000 m Tap link: 20 m maximum RC line terminators (R =120 Ω, C = 1 nF)

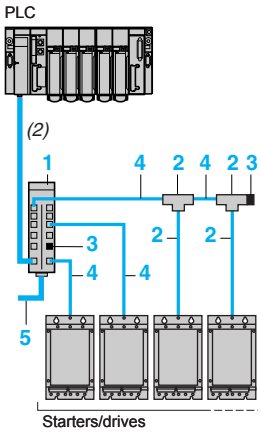

Connection elements for RJ45 wiring system

Card

Description	Used with	Reference	Weight kg
Communication card equipped with a 9-way female SUB-D connector	ATV 61, ATV 71	**VW3 A3 303**	0.300

Accessories

Description		No.	Unit reference	Weight kg
Modbus splitter block 10 RJ45 connectors and 1 screw terminal block		1	**LU9 GC3**	0.500
Modbus T-junction boxes	With integrated cable (0.3 m)	2	**VW3 A8 306 TF03**	0,190
	With integrated cable (1 m)	2	**VW3 A8 306 TF10**	0,210
Line terminators for RJ45 connector *(3)*	R = 120 Ω, C = 1 nF	3	**VW3 A8 306 RC**	0,010
	R = 150 Ω	3	**VW3 A8 306 R**	0.010

522184

LU9 GC3

Cables

Description	Use From	 To	No.	Length m	Reference	Weight kg
Cables for Modbus serial link 2 RJ45 connectors	ATS 48, ATV 21, ATV 31, ATV 61, ATV 71 (terminal ports or Modbus serial liink ports) Modbus T-junction box VW3 A8 306 TF●● Modbus splitter block LU9 GC3	Modbus splitter block LU9 GC3 Modbus T-junction box VW3 A8 306 TF●● Modbus splitter block LU9 GC3	4	0.3	**VW3 A8 306 R03**	0.025
				1	**VW3 A8 306 R10**	0.060
				3	**VW3 A8 306 R30**	0.130
Cables for Modbus serial link One 9-way male SUB-D connector 1 RJ45 connector	ATV 61, ATV 71 (+ communication card VW3 A3 303)	Modbus splitter block LU9 GC3	4	1	**VW3 A58 306 R10**	0.080
				3	**VW3 A58 306 R30**	0.150
Double shielded twisted pair cables	Modbus splitter block LU9 GC3 (screw terminals)	Modbus splitter block LU9 GC3 (screw terminals)	5	100	**TSX CSA 100**	5.680
				200	**TSX CSA 200**	10.920
				500	**TSX CSA 500**	30.000

532174

VW3 A8 306 TF●●

(1) Standard defined in 2002, available on the website: www.modbus.org.
(2) The cable for connecting the PLC and the splitter block depends on the type of PLC; please consult our "Automation platform Modicon Premium – Unity & PL7 software", "Automation platform Modicon Quantum", "Automation platform Modicon TSX Micro – PL7 software" and "Automation and relay functions" specialist catalogues.
(3) Sold in lots of 2.

Presentation:
page 316

Characteristics:
page 316

Starters, drives and communication

Communication via Modbus serial link

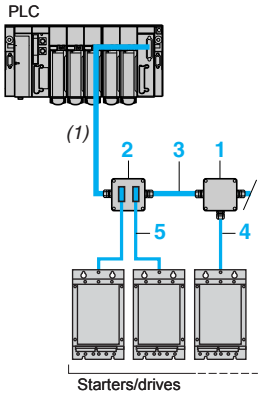

533178

TSX SCA 50

533179

TSX SCA 62

Connection elements using tap junctions

Accessories

Description	No.	Reference	Weight kg
Tap junction 3 screw terminals, RC line terminator	1	**TSX SCA 50**	0.520
Subscriber socket Two 15-way female SUB-D connectors and 2 screw terminals, RC line terminator	2	**TSX SCA 62**	0.570

Cables

Description	Use		No.	Length	Reference	Weight
	From	To		m		kg
Double shielded twisted pair cables	Tap junction TSX SCA 50, subscriber socket TSX SCA 62	Tap junction TSX SCA 50, subscriber socket TSX SCA 62	3	100	**TSX CSA 100**	5.680
				200	**TSX CSA 200**	10.920
				500	**TSX CSA 500**	30.000
Cable for Modbus serial link 1 RJ45 connector and one stripped end	ATS 48, ATV 21, ATV 31, ATV 61, ATV 71 (terminal ports or Modbus serial link ports)	Tap junction TSX SCA 50	4	3	**VW3 A8 306 D30**	0.150
Cable for Modbus serial link 1 RJ45 connector and one 15-way male SUB-D connector	ATS 48, ATV 21, ATV 31, ATV 61, ATV 71 (terminal ports or Modbus serial link ports)	Subscriber socket TSX SCA 62	5	3	**VW3 A8 306**	0.150
Cable for Uni-Telway and Modbus serial link 2 male SUB-D connectors, 9 and 15-way	ATV 61, ATV 71 (+ communication card VW3 A3 303)	Subscriber socket TSX SCA 62	5	3	**VW3 A8 306 2**	0.150

(1) The cable for connecting the PLC and the splitter block depends on the type of PLC; please consult our "Automation platform Modicon Premium - Unity & PL7 software", "Automation platform Modicon Quantum", "Automation platform Modicon TSX Micro – PL7 software" and "Automation and relay functions" specialist catalogues.

Presentation: page 316
Characteristics: page 316

Connection elements using screw terminals

Accessories

Description		Sold in lots of	Reference unit	Weight kg
Line terminators for screw terminals	R = 120 Ω, C = 1 nF	2	**VW3 A8 306 DRC**	0.200
	R = 150 Ω	2	**VW3 A8 306 DR**	0.200

Cable

Description	Use		Length	Reference	Weight
	From	To	m		kg
Cable for Modbus 1 RJ45 connector and one stripped end	ATS 48, ATV 21, ATV 31, ATV 61, ATV 71 (terminal ports or Modbus serial link ports)	Standard screw terminal, tap junction TSX SCA 50	3	**VW3 A8 306 D30**	0.150

Documentation

The manuals and quick reference guides for starters and variable speed drives, as well as the user manuals for communication gateways, are available on the website: www.telemecanique.com.

Starters, drives and communication

Communication via Modbus Plus network

Presentation

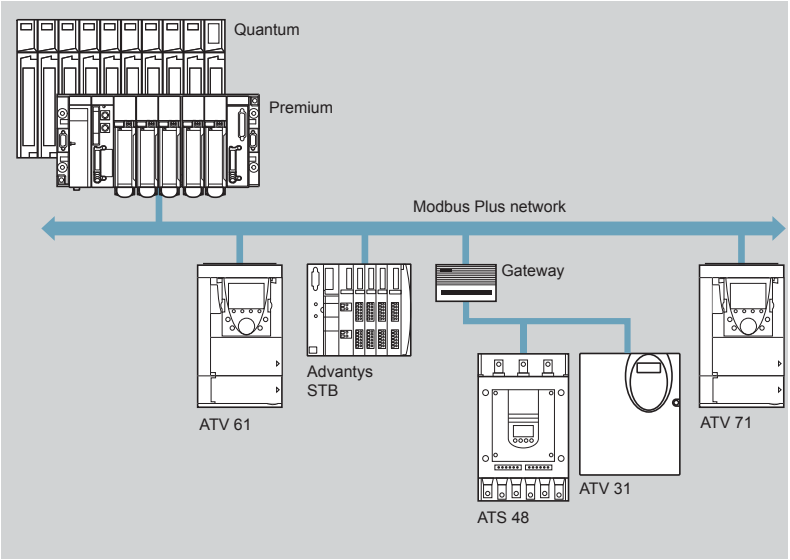

The Modbus Plus network is a high-performance industrial local area network which can be used to meet the needs of client/server type extended architectures, combining a high data rate (1 Mbps), simple, low-cost transmission media and numerous messaging services.

The Altistart 48 soft start/soft stop unit and the Altivar 31 variable speed drive can be connected to the Modbus Plus network via an NW BM85000 gateway which has four RS 232 serial ports.

The Altivar 61 and Altivar 71 variable speed drives are connected to the Modbus Plus network via communication card VW3 A3 302.

Communication services

The main data exchange services between subscribers connected to the network are:
- The “Modbus messaging” service according to Modbus protocol
- The “Global Data” service: each subscriber makes available 32 words for each of the 63 other network subscribers
- The “Peer Cop” dialogue service: point-to-point transaction of 32 receive or transmit words

The “Global Data” and “Peer Cop” services are restricted to a Modbus Plus network with a maximum of 64 subscribers.

Altivar 61 and Altivar 71 drives are accessed by simple configuration in the PLC using “Peer Cop” and “Global Data” services.
These services enable rapid exchange of the main drive parameters:
- The “Peer Cop” service for controlling and adjusting the drive
- The “Global data” service for monitoring the drive

Other parameters, which are used less frequently, can be accessed by the Modbus messaging service.

Characteristics: page 321
Connections: page 322
References: pages 322 and 323

Starters, drives and communication

Communication via Modbus Plus network

Characteristics

Structure	Topology	Network	
	Physical interface	RS 485	
	Access method	Token network	
	Transmission mode	HDLC synchronous	
	Data rate	1 Mbps	
	Medium	Shielded twisted pair 120 Ω Optical fibre	
	Number of subscribers per network	32, without repeater 64, with one or more repeaters	
	Number of networks	4, separated by a maximum of 3 bridges	
	Length of network	450 m maximum without repeater 1800 m maximum with 3 electrical repeaters 3000 m between 2 fibre optic repeaters	
Services	Modbus messaging	Point-to-point requests with confirmation report: 200 bytes maximum, compatible with all Modbus subscribers	
	"Global Data"	4096-byte shared database Cyclic exchange of 32 broadcast words Limited to one network This service does not cross bridges	
	"Peer Cop" dialogue	Point-to-point or broadcast message Limited to one network This service does not cross bridges	
Type of device		**ATS 48, ATV 31**	**ATV 61, ATV 71**
Type of interface		**NW BM85000**	**VW3 A3 302**
Control		"Modbus messaging"	"Peer Cop" 8 configurable words maximum (communication scanner)
Monitoring		"Modbus messaging"	"Global Data" 8 configurable words maximum (communication scanner)
Configuration and adjustment		"Modbus messaging"	"Modbus messaging" Read/write access to all drive parameters

Presentation: page 320
Connections: page 322
References: pages 322 and 323

Starters, drives and communication

Communication via Modbus Plus network

Modbus Plus wiring system

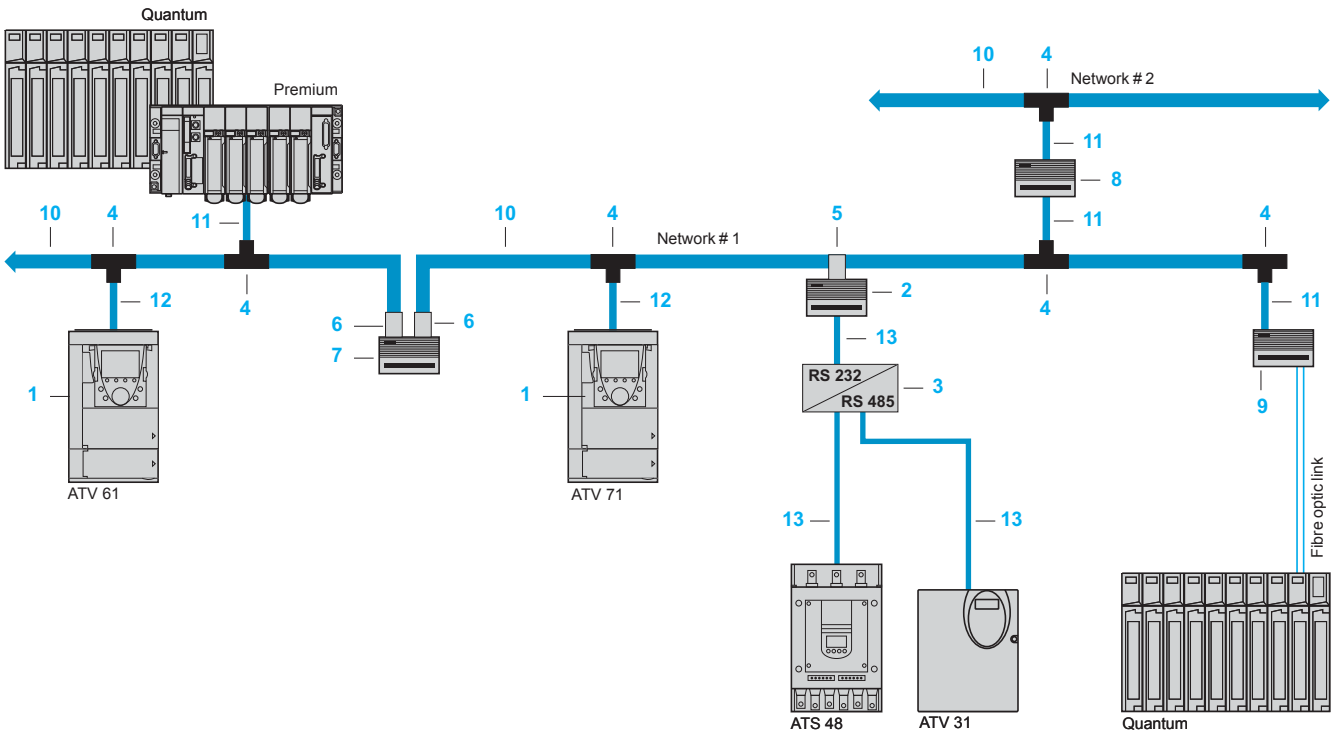

Modbus Plus network connection elements *(1)*

Cards and gateways

Description	Used with	No.	Reference	Weight kg
Communication cards equipped with one 9-way female SUB-D connector	ATV 61, ATV 71	1	**VW3 A3 302**	0.300
Modbus Plus/Modbus gateway 4 RS 232 ports power supply 115…220 V ∿	ATS 48, ATV 31	2	**NW BM85000**	3.158
RS 232/RS 485 interface power supply 24 V ⎓, 20 mA *(2)*	ATS 48, ATV 31	3	**XGS Z24**	0.105

Connection accessories

Description	Use	No.	Reference	Weight kg
Modbus Plus tap (IP 20)	For connecting via a tap junction	4	**990 NAD 230 00**	0.230
Modbus Plus in-line connector	Gateway, bridge and repeater	5	**AS MBKT 085**	0.035
Connector with Modbus Plus terminator (sold in lots of 2)	Bridge and repeater	6	**AS MBKT 185**	0.260
Modbus Plus electrical repeater	Extension beyond 450 m or up to 64 subscribers	7	**NW RR85 001**	2.677
Modbus Plus bridge with 4 ports	Connection of 4 networks maximum	8	**NW BP85 002**	2.813
Line/station fibre-optic repeater	–	9	**490 NRP 254 00**	2.856
Point-to-point fibre-optic repeater	Used to connect an electrical segment to the fibre-optic segment (3000 m maximum)	–	**NW NRP 253 00**	2.863
Wiring tool	Inserting trunk and drop cables in a 990 NAD 230 00 tap	–	**043 509 383**	3.000

(1) To order other connection elements, please consult our "Automation platform Modicon Premium – Unity & PL7 software" and "Automation platform Modicon Quantum" specialist catalogues.
(2) Please consult our "Power supplies, splitter blocks and interfaces" specialist catalogue.

Presentation: page 320
Characteristics: page 321

Modbus Plus network connection elements (continued) (1)

Cables

Description	Use		No.	Length	Reference	Weight
	From	To		m		kg
Trunk cables for Modbus Plus	Modbus Plus tap 990 NAD 230 00	Modbus Plus tap 990 NAD 230 00, Modbus Plus in-line connector AS MBKT 085, Modbus Plus connector with terminators AS MBKT 185	10	30.5	**490 NAA 271 01**	1.833
				152.5	**490 NAA 271 02**	10.135
				305	**490 NAA 271 03**	18.940
				457	**490 NAA 271 04**	30.000
				1525	**490 NAA 271 06**	112.950
Drop cables One 9-way male SUB-D connector and one stripped end	Premium, Quantum PLCs, Modbus Plus bridge with 4 ports NW BP85 002, line/station fibre optic repeater 490 NRP 253 00	Modbus Plus tap 990 NAD 230 00	11	2.4	**990 NAD 211 10**	0.169
				6	**990 NAD 211 30**	0.459
	ATV 61, ATV 71 (+ communication card VW3 A3 302)	Modbus Plus tap 990 NAD 230 00	12	2.4	**990 NAD 219 10**	0.142
				6	**990 NAD 219 30**	0.465
Cable for Modbus 1 RJ45 connector and one stripped end	ATS 48, ATV 31, Modbus Plus/ Modbus gateway NW BM85000	RS 232-RS 485 interface	13	3	**VW3 A8 306 D30**	0.115

(1) To order other connection elements, please consult our "Automation platform Modicon Premium – Unity & PL7 software" and "Automation platform Modicon Quantum" specialist catalogues.

Presentation: page 320
Characteristics: page 321
Connections: page 322

Starters, drives and communication

Communication via Uni-Telway bus

Presentation

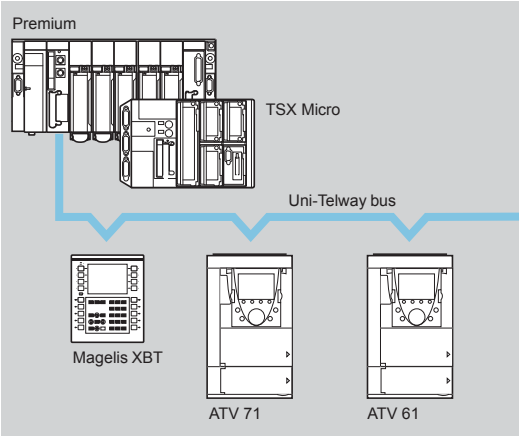

The Uni-Telway bus is a standard means of communication between control system components (PLCs, HMI terminals, supervisors, variable speed drives, numerical controllers, etc).

The Uni-Telway bus requires a master station (Premium, TSX Micro PLCs) which manages the allocation of bus access rights to the various connected slave stations (HMI terminals, variable speed drives, etc). The slave stations can communicate with one another without programming the master station.
An industrial HMI terminal (Magelis type) can be connected directly to the bus and can be used to adjust drives without developing applications specific to the PLC.

The Altivar 61 and Altivar 71 variable speed drives can be connected to the Uni-Telway bus via a communication card VW3 A3 303.

Characteristics

Structure	Topology	Bus
	Physical interface	RS 485 isolated
	Link	Multidrop
	Access method	Master/slave type
	Transmission mode	Asynchronous transmission in baseband
	Data rate	4.8…19.2 Kbps
	Medium	Double shielded twisted pair
	Number of stations	28 maximum
	Length of bus	1000 m maximum excluding tap links
	Tap links	20 m maximum
Services	UNI-TE	Request/response of up to 240 bytes *(1)* initiated by any connected station. Unsolicited point-to-point data of up to 240 bytes *(1)* without confirmation report, initiated by any connected station. Broadcast messages of up to 240 bytes *(1)* initiated by the master station.
	Other functions	Transparent communication, via the master station, with any X-WAY architecture. Diagnostics, debugging, adjustment, programming of PLCs.
	Security	Check character on each frame, acknowledgement and, if required, repetition of messages ensure security of transmission.
	Monitoring	The bus status table, transmission error counters and station status can be accessed on each station.

Uni-Telway bus wiring system

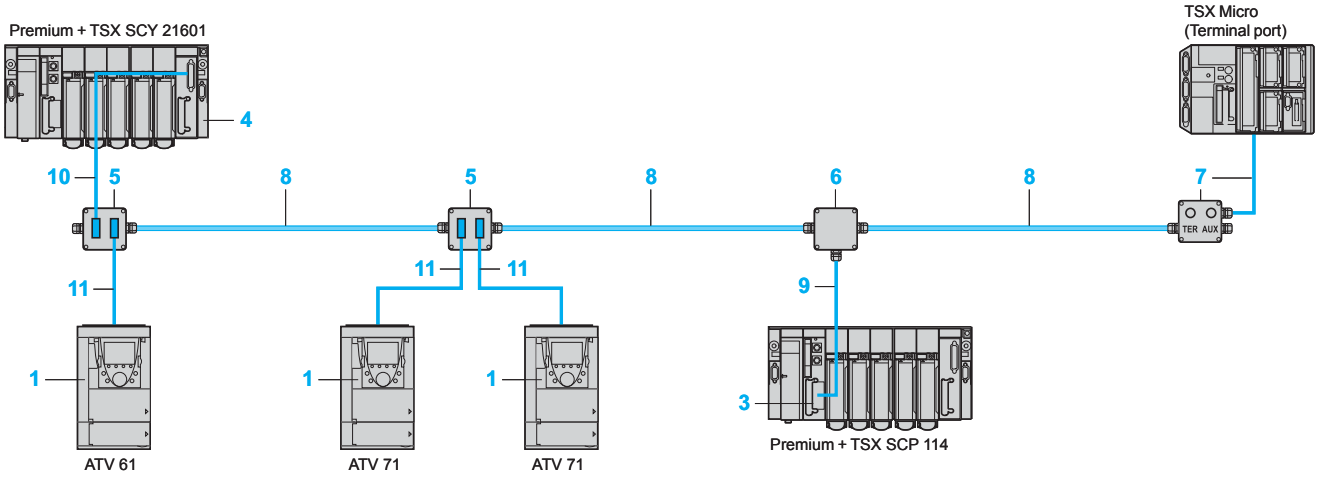

(1) Limited to 128 bytes with the Premium and TSX Micro PLC terminal port.

Reference:
page 325

Starters, drives and communication

Communication via Uni-Telway bus

Uni-Telway bus connection elements *(1)*

Cards, kit and module

Description	Used with	No.	Protocol	Reference	Weight kg
Communication card card equipped with a 9-way female SUB-D connector	ATV 61 ATV 71	1	Uni-Telway, Modbus	**VW3 A3 303**	0.300
RS 485 type III PCMCIA card (compatible with RS 422) 1.2...19.2 Kbps	Premium, Atrium, TSX Micro PLCs, or TSX SCY 21601 module	3	Uni-Telway, Modbus, character mode	**TSX SCP 114**	0.105
Communication module	Premium or Atrium PLC	4	Uni-Telway, Modbus, character mode	**TSX SCY 21601**	0.360

533153

TSX SCA 62

535577

TSX SCA 50

533154

TSX P ACC 01

Connection accessories

Description	Use	No.	Reference	Weight kg
Subscriber socket Two 15-way female SUB-D connectors and 2 screw terminals	2-channel junction box, trunk cable extension and line terminator	5	**TSX SCA 62**	0.570
Tap junction 3 screw terminals	Junction box, trunk cable extension and line terminator	6	**TSX SCA 50**	0.520
Terminal port connection box with integrated cable, length 1 m	Connection of a TSX Micro or Premium PLC via the PLC terminal port and line terminator	7	**TSX P ACC 01**	0.690

Cables

Description	Use From	Use To	No.	Length m	Reference	Weight kg
Uni-Telway double shielded twisted pair cables	Junction box TSX SCA 50, subscriber socket TSX SCA 62, terminal port connection box TSX P ACC 01	Subscriber socket TSX SCA 62, junction box TSX SCA 50, terminal port connection box TSX P ACC 01	8	100	**TSX CSA 100**	5.680
				200	**TSX CSA 200**	10.920
				500	**TSX CSA 500**	30.000
Cables for isolated RS 485 tap link	Card TSX SCP 114	Junction box TSX SCA 50	9	3	**TSX SCP CU 4030**	0.160
		Subscriber socket TSX SCA 62	9	3	**TSX SCP CU 4530**	0.180
	Integrated channel (channel 0) of TSX SCY 2160 1 module	Junction box TSX SCA 50	10	3	**TSX SCP CU 6030**	0.180
		Subscriber socket TSX SCA 62	10	3	**TSX SCY CU 6530**	0.200
Cable for Uni-Telway or Modbus bus 2 male SUB-D connectors 9 and 15-way	ATV 61, ATV 71 (+ communication card VW3 A3 303)	Subscriber socket TSX SCA 62	11	3	**VW3 A8 306 2**	0.150

(1) To order other elements for connection to the Fipio bus, please consult our "Automation platform Modicon Premium – Unity & PL7 software" and "Automation platform Modicon TSX Micro – PL7 software" specialist catalogues.

Presentation: page 324
Characteristics: page 324
Connections: page 324

TeSys motor starters - open version
Communication gateways LUF P

Presentation

Communication gateways LUF P allow connection between the Modbus serial link and Fipio, Profibus DP or DeviceNet field buses.

After configuration, these gateways manage information which can be accessed by the Modbus serial link and make this information available for read/write functions (command, monitoring, configuration and adjustment) on the field buses.

An LUF P communication gateway consists of a box which can be clipped onto a 35 mm omega rail, allowing connection of up to 8 Slaves connected on the Modbus serial link.

Example of architecture

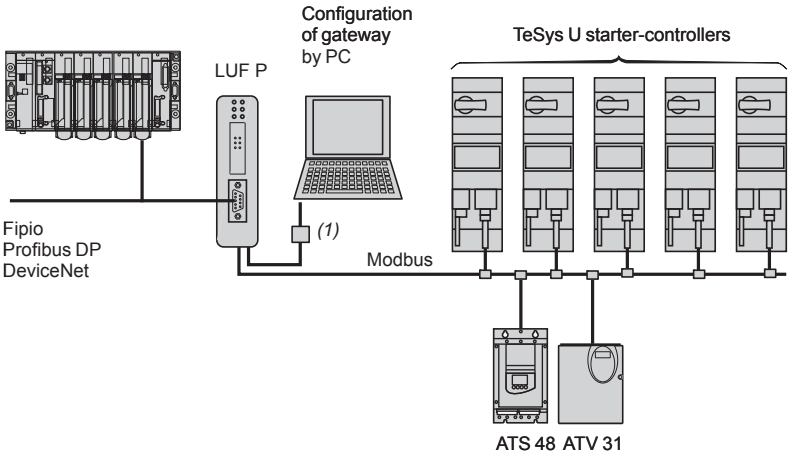

.

Description

Front panel of the product

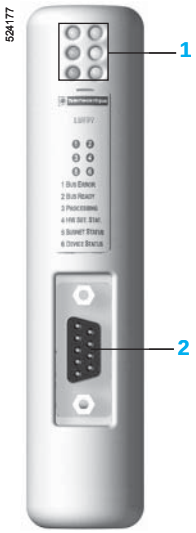

1 LED indicating :
- communication status of the Modbus serial links,
- gateway status,
- communication status of the Fipio, Profibus DP or DeviceNet bus.

2 Connectors for connection to Fipio, Profibus DP or DeviceNet buses.

Underside of product

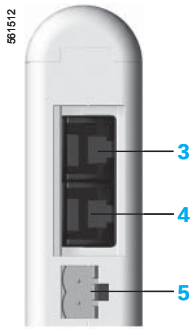

3 RJ45 connector for connection of the Modbus serial link
4 RJ45 connector for link to a PC
5 ⎓ 24 V power supply

Software set-up

For the Fipio bus, software set-up of the gateway is performed using either PL7 Micro/Junior/Pro software or ABC Configurator software.
For the Profibus DP and DeviceNet buses, software set-up is performed using ABC Configurator.
This software is included in the TeSys U user's manual.

(1) Connection kit for PowerSuite software workshop (see page 304).

Characteristics, references: page 327
Dimensions: page 327

Characteristics

Bus type			Fipio	Profibus DP	DeviceNet
Environment	Conforming to IEC 60664		Degree of pollution: 2		
Ambient air temperature	Around the device	°C	+ 5…+ 50		
Degree of protection			IP 20		
Electromagnetic compatibility	Emission		Conforming to IEC 50081-2: 1993		
	Immunity		Conforming to IEC 61000-6-2: 1999		
Number of Modbus slaves which can be connected			≤ 8		
Connection	Modbus		By RJ45 connector conforming to Schneider Electric RS485 standard		
	To a PC		By RJ45 connector, with PowerSuite connection kit		
	Field bus		By SUB D9 female connector	By SUB D9 female connector	By 5-way removable screw connector
Supply		V	External supply, ⎓ 24 ± 10 %		
Consumption	Max.	mA	280		
	Typical	mA	100		
Indication/diagnostics			By LED on front panel		
Services	Profile		FED C32 or FED C32P	–	–
	Command		26 configurable words *(1)*	122 configurable words	256 configurable words
	Monitoring		26 configurable words *(1)*	122 configurable words	256 configurable words
	Configuration and adjustment		By gateway mini messaging facility (PKW)		

References

Description	For use with	With bus/ serial link	Reference	Weight kg
Communication gateways	TeSys U starter-controllers, Altistart 48, Altivar 31	Fipio/Modbus	**LUF P1**	0.245
		Profibus DP/Modbus	**LUF P7**	0.245
		DeviceNet/Modbus	**LUF P9**	0.245

Connection accessories

822631

TSX FP ACC 12

822713

490 NAD 911 03

Description	For use with	Length m	Connectors	Reference	Weight kg
Connection cables	Modbus	3	1 RJ45 type connector and one end with stripped wires	**VW3 A8 306 D30**	0.150
		0.3	2 RJ45 type connectors	**VW3 A8 306 R03**	0.050
		1	2 RJ45 type connectors	**VW3 A8 306 R10**	0.050
		3	2 RJ45 type connectors	**VW3 A8 306 R30**	0.150
Connectors	Fipio	–	1 SUB-D 9 male connector	**TSX FP ACC12**	0.040
	Profibus mid line	–	1 SUB-D 9 male connector	**490 NAD 911 04**	–
	Profibus line end	–	1 SUB-D 9 male connector	**490 NAD 911 03**	–

Documentation

Description	Medium	Language	Reference	Weight kg
User's manual for TeSys U range *(2)*	CD-Rom	Multilingual: English, French, German, Italian, Spanish	**LU9 CD1**	0.022

Dimensions

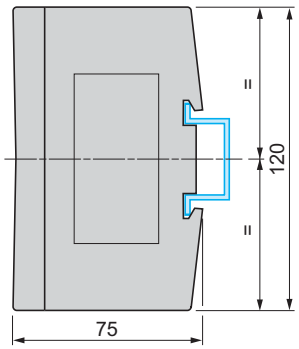

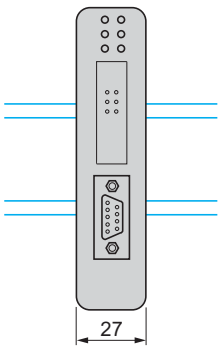

(1) If the gateway is configured using PL7 and not ABC Configurator, the I/O capacity is limited to a total of 26 words.
(2) This CD-Rom contains user's manuals for AS-Interface and Modbus communication modules, multifunction control units and gateways, as well as for the gateway programming software, ABC Configurator.

Presentation, description: page 326
Setting-up: page 326

Product reference index

043 509 383 318
490 NAD 911 03 323 and 325
490 NAD 911 04 323 and 325
490 NAA 271 0● 319
490 NRP 254 00 318
490 NTC 000 ●● 310
490 NTW 000 ●● 310
499 NEH 104 10 311
499 NEH 141 00 311
499 NES 181 00 311
499 NES 251 00 311
499 NMS 251 0● 311
499 NOH 105 10 311
499 NSS 251 0● 311
990 NAD 211 10 319
990 NAD 211 30 319
990 NAD 219 ●● 319
990 NAD 230 00 318

A

AS MBKT ●●● 318
ATV 71H037M3 22
ATV 71H075M3 22
ATV 71H075N4 23
ATV 71HC11N4 23
ATV 71HC11Y 25
ATV 71HC13N4 23
ATV 71HC13Y 25
ATV 71HC16N4 23
ATV 71HC16Y 25
ATV 71HC20N4 23
ATV 71HC20Y 25
ATV 71HC25N4 23
ATV 71HC25Y 25
ATV 71HC28N4 23
ATV 71HC31N4 23
ATV 71HC31Y 25
ATV 71HC40N4 23
ATV 71HC40Y 25
ATV 71HC50N4 23
ATV 71HC50Y 25
ATV 71HC63Y 25
ATV 71HD11M3X 22
ATV 71HD11N4 23
ATV 71HD11Y 25
ATV 71HD15M3X 22
ATV 71HD15N4 23
ATV 71HD15Y 25
ATV 71HD18M3X 22
ATV 71HD18N4 23
ATV 71HD18Y 25
ATV 71HD22M3X 22
ATV 71HD22N4 23
ATV 71HD22Y 25
ATV 71HD30N4 23
ATV 71HD30Y 25
ATV 71HD37N4 23
ATV 71HD37Y 25
ATV 71HD45N4 23
ATV 71HD45Y 25
ATV 71HD55N4 23
ATV 71HD55Y 25
ATV 71HD75N4 23
ATV 71HD75Y 25
ATV 71HD90N4 23
ATV 71HD90Y 25
ATV 71HU15M3 22
ATV 71HU22M3 22
ATV 71HU22N4 23
ATV 71HU22Y 25
ATV 71HU30M3 22
ATV 71HU30N4 23
ATV 71HU40M3 22
ATV 71HU40N4 23
ATV 71HU40Y 25
ATV 71HU55M3 22
ATV 71HU55N4 23
ATV 71HU55Y 25
ATV 71HU75M3 22
ATV 71HU75N4 23
ATV 71HU75Y 25
ATV 71P075N4Z 24
ATV 71PD11N4Z 24
ATV 71PU22N4Z 24
ATV 71PU30N4Z 24
ATV 71PU40N4Z 24
ATV 71PU55N4Z 24
ATV 71PU75N4Z 24
ATV 71HC11Y 248
ATV 71HC13Y 248
ATV 71HC16Y 248
ATV 71HC20Y 248
ATV 71HC25Y 249
ATV 71HC31Y 249
ATV 71HC40Y 249
ATV 71HC50Y 249
ATV 71HC63Y 249
ATV 71HD11Y 248
ATV 71HD15Y 248
ATV 71HD18Y 248
ATV 71HD22Y 248
ATV 71HD30M3X 22
ATV 71HD30Y 248
ATV 71HD37M3X 22
ATV 71HD37Y 248
ATV 71HD45M3X 22
ATV 71HD45Y 248
ATV 71HD55M3X 22
ATV 71HD55Y 248
ATV 71HD75M3X 22
ATV 71HD75Y 248
ATV 71HD90Y 248
ATV 71HU15N4 23
ATV 71HU22Y 248
ATV 71HU30Y 25 and 248
ATV 71HU40Y 248
ATV 71HU55Y 248
ATV 71HU75Y 248
ATV 71P075N4Z 247
ATV 71PU15N4Z 24
ATV 71PU22N4Z 247
ATV 71PU30N4Z 247
ATV 71PU40N4Z 247
ATV 71PU55N4Z 247
ATV 71PU75N4Z 247
ATV 71W075N4 24 and 246
ATV 71WD11N4 24 and 246
ATV 71WD15N4 24 and 246
ATV 71WD18N4 24 and 246
ATV 71WD22N4 24 and 246
ATV 71WD30N4 24 and 246
ATV 71WD37N4 24 and 246
ATV 71WD45N4 24 and 246
ATV 71WD55N4 24 and 246
ATV 71WD75N4 24 and 246
ATV 71WU15N4 24 and 246
ATV 71WU22N4 24 and 246
ATV 71WU30N4 24 and 246
ATV 71WU40N4 24 and 246
ATV 71WU55N4 24 and 246
ATV 71WU75N4 24 and 246

L

LA9 P307 325
LU9 CD1 323
LU9 GC3 109,133 and 315
LUF P1 314 and 323
LUF P7 323
LUF P9 323

N

NW RR85 001 318
NW BM85000 318
NW BP85 002 318
NW NRP 253 00 318

T

TCS EAK 0100 310
TCS EAQ 0100 310
TCS ESM083F23F0 311
TCS ESM083F2CS0 311
TCS ESM083F2CU0 311
TSX CAN CA 100 123 and 133
TSX CAN CA 300 123 and 133
TSX CAN CA 50 1123 and 133
TSX CAN CB 100 123 and 133
TSX CAN CB 300 123 and 133
TSX CAN CB 50 123 and 133
TSX CAN CD 100 123 and 133
TSX CAN CD 300 123 and 133
TSX CAN CD 50 123 and 133
TSX FP ACC12 315 and 323
TSX FP ACC14 315
TSX FP ACC6 315
TSX FP ACC7 315
TSX FP ACC8M 315
TSX FP ACC9 315
TSX CAN KCDF 123
TSX CSA 100 321
TSX CSA 200 321
TSX CSA 500 321
TSX ETG 100 310
TSX FP CA100 315
TSX FP CA200 315
TSX FP CA500 315
TSX FP CC100 315
TSX FP CC200 315
TSX FP CC500 315
TSX FP CR100 315
TSX FP CR200 315
TSX FP CR500 315
TSX FP JF020 315
TSX P ACC 01 321
TSX SCA 50 321
TSX SCA 62 321
TSX SCP 114 321
TSX SCP CU 4030 321
TSX SCP CU 4530 321
TSX SCP CU 6030 321
TSX SCY 21601 321
TSX SCY CU 6530 321

V

VW3 A1 101 108
VW3 A1 102 108 and 109
VW3 A1 103 108
VW3 A1 104 R10 108 and 109
VW3 A1 104 R100 108 and 109
VW3 A1 104 R30 108 and 109
VW3 A1 104 R50 108 and 109
VW3 A1 105 108
VW3 A3 101 26
VW3 A3 201 115
VW3 A3 202 115
VW3 A3 301 132 and 314
VW3 A3 302 132 and 318
VW3 A3 303 132 and 321
VW3 A3 304 132
VW3 A3 307 132
VW3 A3 309 132
VW3 A3 310 132 and 314
VW3 A3 311 132 and 314
VW3 A3 316 132
VW3 A3 317 132
VW3 A3 40● 113
VW3 A3 411 113 and 168
VW3 A3 501 123
VW3 A4 401 168
VW3 A4 402 168
VW3 A4 403 168
VW3 A4 404 168
VW3 A4 405 168
VW3 A4 406 168
VW3 A4 407 168
VW3 A4 408 168
VW3 A4 410 168
VW3 A4 412 168
VW3 A4 413 168
VW3 A4 501 155
VW3 A4 502 155
VW3 A4 503 155
VW3 A4 504 155
VW3 A4 505 155
VW3 A4 506 155
VW3 A4 507 155
VW3 A4 508 155
VW3 A4 509 155
VW3 A4 510 155
VW3 A4 511 155
VW3 A4 512 155
VW3 A4 551 160
VW3 A4 552 160
VW3 A4 553 160
VW3 A4 554 160
VW3 A4 555 160
VW3 A4 556 160
VW3 A4 557 160
VW3 A4 558 160
VW3 A4 559 160
VW3 A4 560 160
VW3 A4 561 160
VW3 A4 562 160
VW3 A4 563 160
VW3 A4 564 160
VW3 A4 565 160
VW3 A4 568 160
VW3 A4 569 160
VW3 A4 570 160
VW3 A4 571 160
VW3 A4 572 160
VW3 A4 601 162
VW3 A4 602 162
VW3 A4 603 162
VW3 A4 604 162
VW3 A4 605 162
VW3 A4 606 162
VW3 A4 607 162
VW3 A4 608 162
VW3 A4 609 162
VW3 A4 610 162
VW3 A4 611 162
VW3 A4 612 162
VW3 A4 613 162
VW3 A4 619 162
VW3 A4 621 163
VW3 A4 622 163
VW3 A4 623 163
VW3 A4 624 163
VW3 A4 625 163
VW3 A4 626 163
VW3 A4 627 163
VW3 A4 628 163
VW3 A4 629 163
VW3 A4 630 163
VW3 A4 631 163
VW3 A4 632 163
VW3 A4 633 163
VW3 A4 639 163
VW3 A4 641 164
VW3 A4 642 164
VW3 A4 643 164
VW3 A4 644 164
VW3 A4 645 164
VW3 A4 646 164
VW3 A4 647 164
VW3 A4 648 164
VW3 A4 649 164
VW3 A4 650 164
VW3 A4 651 164
VW3 A4 656 164
VW3 A4 657 164
VW3 A4 661 165
VW3 A4 662 165

VW3 A4 663 165
VW3 A4 664 165
VW3 A4 665 165
VW3 A4 666 165
VW3 A4 667 165
VW3 A4 668 165
VW3 A4 669 165
VW3 A4 670 165
VW3 A4 671 165
VW3 A4 676 165
VW3 A4 677 165

VW3 A5 101 172 and 173
VW3 A5 102 172 and 173
VW3 A5 103 172 and 173
VW3 A5 104 172 and 173
VW3 A5 105 172 and 173
VW3 A5 106 172 and 173
VW3 A5 107 172 and 173
VW3 A5 108 172 and 173
VW3 A5 201 175
VW3 A5 202 175
VW3 A5 203 175
VW3 A5 204 175
VW3 A5 205 175
VW3 A5 206 175
VW3 A5 207 175
VW3 A5 208 175
VW3 A5 209 175
VW3 A5 210 175
VW3 A5 211 175
VW3 A58501 160
VW3 A58502 160
VW3 A58502 160
VW3 A7 101 135
VW3 A7 102 135
VW3 A7 103 135
VW3 A7 104 135
VW3 A7 201 149
VW3 A7 202 149
VW3 A7 203 149
VW3 A7 204 149
VW3 A7 205 149
VW3 A7 206 149
VW3 A7 207 149
VW3 A7 208 149
VW3 A7 209 149
VW3 A7 210 149
VW3 A7 211 149
VW3 A7 212 149
VW3 A7 231 149
VW3 A7 232 149
VW3 A7 233 149
VW3 A7 234 149
VW3 A7 235 149
VW3 A7 236 149
VW3 A7 237 149
VW3 A7 238 149
VW3 A7 239 149
VW3 A7 240 149
VW3 A7 241 149
VW3 A7 701 137
VW3 A7 702 137
VW3 A7 703 137
VW3 A7 704 137
VW3 A7 705 137
VW3 A7 706 137
VW3 A7 707 137
VW3 A7 708 137
VW3 A7 709 137
VW3 A7 710 137
VW3 A7 711 137
VW3 A7 712 137
VW3 A7 713 137
VW3 A7 714 137
VW3 A7 715 137
VW3 A7 716 137
VW3 A7 717 137
VW3 A7 718 137
VW3 A7 801 139
VW3 A7 802 139
VW3 A7 803 139
VW3 A7 804 139
VW3 A7 805 139
VW3 A7 806 139
VW3 A7 807 139
VW3 A7 808 139
VW3 A7 809 139
VW3 A7 810 139
VW3 A7 811 139
VW3 A7 812 139
VW3 A7 813 139
VW3 A7 814 139
VW3 A7 815 139
VW3 A7 816 139
VW3 A7 817 139
VW3 A8 104 304
VW3 A8 105 304
VW3 A8 106 123 and 304
VW3 A8 114 304
VW3 A8 115 304
VW3 A8 306 2 321
VW3 A8 306 D30 310, 319, 323 and 325
VW3 A8 306 R 133
VW3 A8 306 R30 323
VW3 A8 306 R03 109, 133, 315 and 323
VW3 A8 306 R10 109, 133, 315 and 323
VW3 A8 306 R30 109
VW3 A8 306 RC 109,133 and 315
VW3 A8 306 TF03 109
VW3 A8 306 TF10 109
VW3 A9 101 33
VW3 A9 102 33
VW3 A9 103 33
VW3 A9 104 33
VW3 A9 105 33
VW3 A9 106 33
VW3 A9 107 33
VW3 A9 108 33
VW3 A9 109 33
VW3 A9 110 33
VW3 A9 111 33
VW3 A9 112 33
VW3 A9 113 33
VW3 A9 114 33
VW3 A9 115 33
VW3 A9 116 33
VW3 A9 117 33
VW3 A9 201 32
VW3 A9 202 32
VW3 A9 203 32
VW3 A9 204 32
VW3 A9 205 32
VW3 A9 206 32
VW3 A9 207 32
VW3 A9 208 32
VW3 A9 209 32
VW3 A9 210 32
VW3 A9 211 32
VW3 A9 212 32
VW3 A9 213 32
VW3 A9 214 32
VW3 A9 217 32
VW3 A9 301 34
VW3 A9 302 34
VW3 A9 303 34
VW3 A9 304 34
VW3 A9 305 34
VW3 A9 306 34
VW3 A9 307 34
VW3 A9 308 34
VW3 A9 309 34 and 35
VW3 A9 310 34 and 35
VW3 A9 312 34 and 35
VW3 A9 314 34
VW3 A9 404 27
VW3 A9 405 27
VW3 A9 406 27
VW3 A9 407 27
VW3 A9 501 30
VW3 A9 502 30
VW3 A9 503 30
VW3 A9 504 30
VW3 A9 505 30
VW3 A9 506 30
VW3 A9 507 30
VW3 A9 508 30
VW3 A9 509 30
VW3 A9 510 30
VW3 A9 511 30
VW3 A9 512 30
VW3 A9 513 30
VW3 A9 514 30
VW3 A9 515 30
VW3 A9 541 39
VW3 A9 542 39
VW3 A9 543 39
VW3 A9 544 39
VW3 A9 545 39
VW3 A9 546 39
VW3 A9 547 39
VW3 A9 548 39
VW3 A9 549 39
VW3 A9 550 39
VW3 A9 551 39
VW3 A9 601 169
VW3 A9 602 169
VW3 A9 612 173
VW3 A9 613 173
VW3 A9 621 28
VW3 A9 622 28
VW3 A9 623 28
VW3 A9 624 28
VW3 A9 625 28
VW3 A9 626 28
VW3 A9 627 28
VW3 A9 628 28
VW3 A9 629 29
VW3 A9 631 29
VW3 A9 633 29
VW3 A9 635 29
VW3 A9 637 29
VW3 A9 638 29
VW3 A9 639 29
VW3 A9 640 29
VW3 A9 641 29
VW3 A9 642 28
VW3 A9 643 28
VW3 A9 644 29
VW3 A9 645 29
VW3 A9 646 29
VW3 A9 801 31
VW3 A9 802 31
VW3 A9 803 31
VW3 A9 901 26
VW3 A9 902 26
VW3 A9 903 26
VW3 A9 904 26
VW3 A9 905 26
VW3 A9 906 26
VW3 A9 907 26
VW3 CAN A71 123 and 133
VW3 CAN KCDF 133
VZ3 V1 ●●● 31

X

XGS Z24 304 and 318

The ef ciency of Telemecanique branded *solutions*

Used in combination, Telemecanique products provide quality solutions, meeting all your Automation and Control applications requirements.

Simple machines
Altistart 01: 0.37 to 75 kW
Altivar 11: 0.18 to 2.2 kW
Altivar 31: 0.18 to 15 kW

Complex, high power machines
Altivar 71 : 0.37 to 630 kW

Pumping and ventilation machines
Altistart 48: 4 to 1 200 kW
Altivar 11...347: 0.18 to 2.2 kW
Altivar 21 : 0.75 to 75 kW
Altivar 61 : 0.75 to 800 kW

A worldwide presence

Constantly available
- More than 5 000 points of sale in 190 countries.
- You can be sure to nd the range of products that are right for you and which complies fully with the standards in the country where they are used.

Technical assistance wherever you are
- Our technicians are at your disposal to assist you in nding the optimum solution for your particular needs.
- Schneider Electric provides you with all necessary technical assitance, throughout the world.

www.telemecanique.com

Simply Smart !

Schneider Electric Industries SAS

Head Of ce
89, bd Franklin Roosevelt
92506 Rueil-Malmaison Cedex
France

www.schneider-electric.com

Due to evolution of standards and equipment, the characteristics indicated in texts and images of this document do not constitute a commitment on our part without con rmation.

Design: Schneider Electric
Photos: Schneider Electric
Printed by: Ingoprint

DIA2ED2050104EN

ART. 805984

10 / 2007 - V3.0