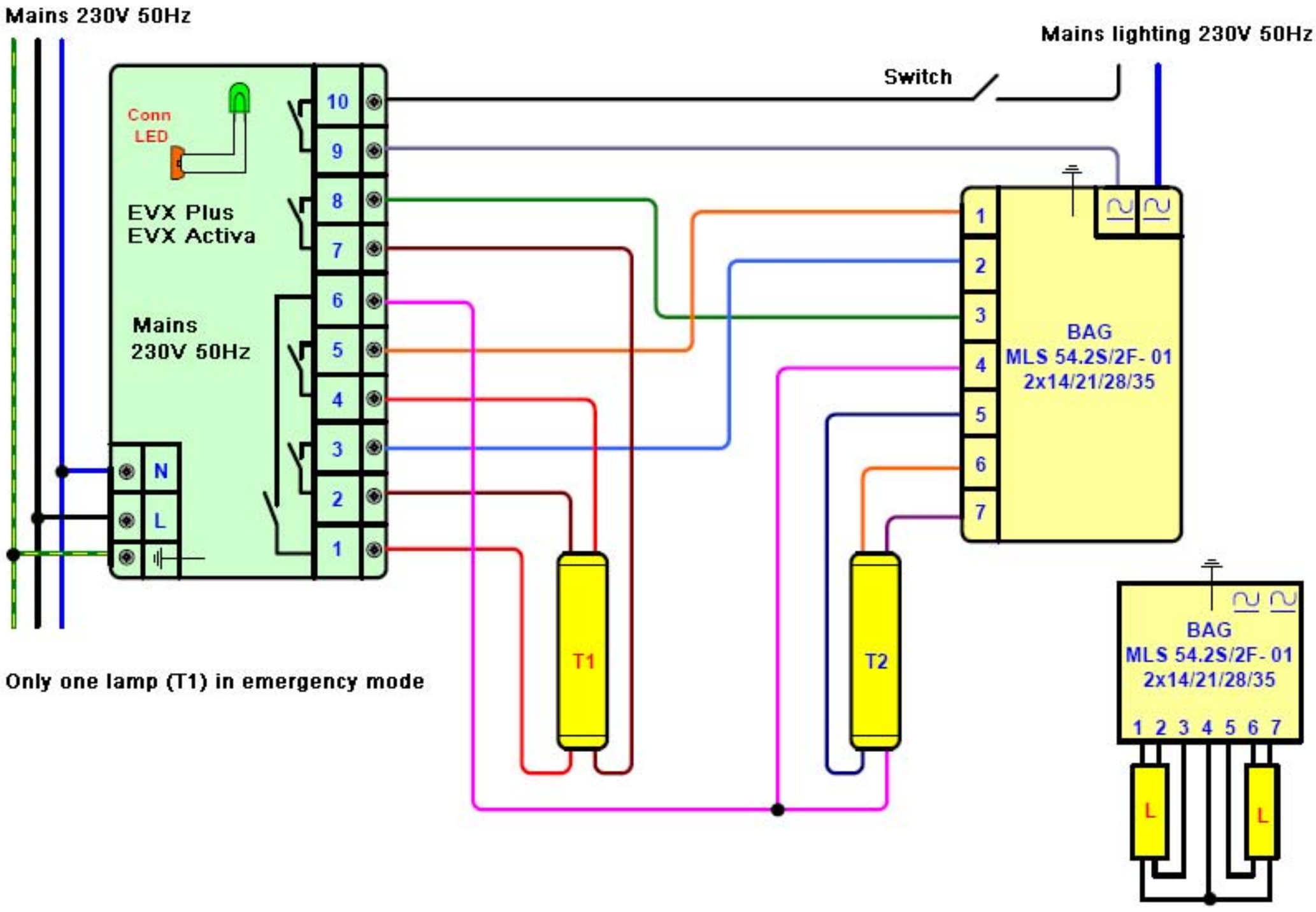

Only one lamp (T1) in emergency mode