SCADAPack 530E Hardware Manual

Schneider Electric

Documentation

Table of Contents

I SCADAPack 530E Hardware Manual

Schneider Electric

Documentation

Version: 8.11.1
Date: November 2014

The information provided in this documentation contains general descriptions and/or technical characteristics of the performance of the products contained herein. This documentation is not intended as a substitute for and is not to be used for determining suitability or reliability of these products for specific user applications. It is the duty of any such user or integrator to perform the appropriate and complete risk analysis, evaluation and testing of the products with respect to the relevant specific application or use thereof. Neither Schneider Electric nor any of its affiliates or subsidiaries shall be responsible or liable for misuse of the information contained herein. If you have any suggestions for improvements or amendments or have found errors in this publication, please notify us.

All pertinent state, regional, and local safety regulations must be observed when installing and using this product. For reasons of safety and to help ensure compliance with documented system data, only the manufacturer should perform repairs to components.

1 Technical Support

Questions and requests related to any part of this documentation can be directed to one of the following support centers.

Technical Support: Americas, Europe, Middle East, Asia

Available Monday to Friday 8:00am – 6:30pm Eastern Time

Toll free within North America	1-888-226-6876
Direct Worldwide	+1-613-591-1943
Email	supportTRSS@schneider-electric.com

Technical Support: Australia

Inside Australia	1300 369 233
Email	au.help@schneider-electric.com

2 Safety Information

Read these instructions carefully, and look at the equipment to become familiar with the device before trying to install, operate, or maintain it. The following special messages may appear throughout this documentation or on the equipment to warn of potential hazards or to call attention to information that clarifies or simplifies a procedure.

⚡	The addition of this symbol to a Danger or Warning safety label indicates that an electrical hazard exists, which will result in personal injury if the instructions are not followed.

⚠	This is the safety alert symbol. It is used to alert you to potential personal injury hazards. Obey all safety messages that follow this symbol to avoid possible injury or death.

⚠ DANGER

DANGER indicates an imminently hazardous situation which, if not avoided, **will result in** death or serious injury.

⚠WARNING

WARNING indicates a potentially hazardous situation which, if not avoided, **can result** in death or serious injury.

⚠CAUTION

CAUTION indicates a potentially hazardous situation which, if not avoided, **can result** in minor or moderate injury.

NOTICE

NOTICE indicates a potentially hazardous situation which, if not avoided, **can result in** equipment damage.

PLEASE NOTE

Electrical equipment should be installed, operated, serviced, and maintained only by qualified personnel. No responsibility is assumed by Schneider Electric for any consequences arising out of the use of this material.

A qualified person is one who has skills and knowledge related to the construction and operation of electrical equipment and the installation, and has received safety training to recognize and avoid the hazards involved.

BEFORE YOU BEGIN

Do not use this product on machinery lacking effective point-of-operation guarding. Lack of effective point-of-operation guarding on a machine can result in serious injury to the operator of that machine.

⚠CAUTION

EQUIPMENT OPERATION HAZARD

- Verify that all installation and set up procedures have been completed.
- Before operational tests are performed, remove all blocks or other temporary holding means used for shipment from all component devices.
- Remove tools, meters, and debris from equipment.

Failure to follow these instructions can result in minor or moderate injury.

Follow all start-up tests recommended in the equipment documentation. Store all equipment documentation for future reference.

Software testing must be done in both simulated and real environments.

Verify that the completed system is free from all short circuits and grounds, except those grounds installed according to local regulations (according to the National Electrical Code in the U.S.A, for instance). If high-potential voltage testing is necessary, follow recommendations in equipment documentation to help prevent accidental equipment damage.

OPERATION AND ADJUSTMENTS

The following precautions are from the NEMA Standards Publication ICS 7.1-1995 (English version prevails):

- Regardless of the care exercised in the design and manufacture of equipment or in the selection and ratings of components, there are hazards that can be encountered if such equipment is improperly operated.
- It is sometimes possible to misadjust the equipment and thus produce unsatisfactory or unsafe operation. Always use the manufacturer's instructions as a guide for functional adjustments. Personnel who have access to these adjustments should be familiar with the equipment manufacturer's instructions and the machinery used with the electrical equipment.
- Only those operational adjustments actually required by the operator should be accessible to the operator. Access to other controls should be restricted to help prevent unauthorized changes in operating characteristics.

ACCEPTABLE USE

SCADAPack E Remote Terminal Units (RTUs) and input/output (I/O) modules are intended for use in monitoring and controlling non-critical equipment only. They are not intended for safety-critical applications.

⚠WARNING

UNACCEPTABLE USE

Do not use SCADAPack E RTUs or I/O modules as an integral part of a safety system. These devices are not safety products.

Failure to follow this instruction can result in death or serious injury.

⚠CAUTION

EQUIPMENT OPERATION HAZARD

When devices are used for applications with technical safety requirements, the relevant instructions must be followed.

For safe and proper operating results, use only Schneider Electric software or approved software with Schneider Electric hardware products.

Failure to follow these instructions can result in minor or moderate injury.

Important Notices for Hazardous Locations

- Class I Division 2, Groups A, B, C and D
- Ex nA IIC T4 Gc
- Class I Zone 2 AEx nA IIC T4 Gc
- Ex II 3 G

Applies to SCADAPack E products, models TBUP530, TBUP535 and TBUX (CSA Marked)
Those products are available for use in Class I, Division 2, Groups A, B, C & D and Class I Zone 2 Hazardous Locations. Such locations are defined in Article 500 and 505 of the US National Fire Protection Association (NFPA) publication NFPA 70, otherwise known as the National Electrical Code, in Section 18 of the Canadian Standards Association C22.1 (Canadian Electrical Code) and in IEC/EN 60079-10.

The products have been recognized for use in these hazardous locations by the Canadian Standards Association (CSA) International.

CSA certification is in accordance with Standards CSA C22.2 No. 213, CSA C22.2 60079-0, CSA C22.2 60079-15, ANSI/ISA 60079-0, ANSI/ISA 60079-15, ANSI/ISA 12.12.01, FM 3600 and FM 3611 subject to the following conditions of approval:

1. Install the product in a protective enclosure providing at least IP54 protection.
2. Confirm that the location is free from explosively hazardous gases before wiring, connecting or disconnecting the product, using any USB connection or replacing any fuses.

WARNING EXPLOSION HAZARD

Do not disconnect equipment unless power has been switched off or the area is known to be non-hazardous.

Substitution of components may impair suitability for Class I, Division 2.

Refer to Articles 500 through 502 of the National Electrical Code (NFPA 70) and Appendix J of CSA C22.1 for further information on hazardous locations and approved Division 2 wiring methods.

Refer to Articles 505 of the National Electrical Code (NFPA 70) and Section 18 of CSA C22.1 for further information on hazardous locations and approved Zone 2 wiring methods.

3 About this Manual

Audience

This manual is written for people who need to install, troubleshoot or maintain the Remote Terminal Unit (RTU) hardware. These individuals are typically:

- Systems Engineers
- Commissioning Engineers
- Maintenance Technicians

Scope

This manual describes:

- The physical design of the RTU, including detailed hardware specifications
- The physical design of integrated inputs and outputs (I/O) and the basic requirements for adding I/O expansion modules
- Installation, wiring and addressing for the RTU
- Diagnostics capabilities on the RTU
- Maintenance recommendations for the RTU

Related Documents

Use this manual with other manuals included in your SCADAPack E documentation set. The table below lists the main manuals for the tasks described. However, it is not a complete list of the manuals available to you. Please see the SCADAPack E Reference Manual set for a complete listing of manuals.

For Information About	See
The basic steps required to get your RTU up and running	• The Quick Start Guide for your RTU
Configuring your RTU to communicate with other SCADAPack E RTUs and with input and output (I/O) devices	• SCADAPack E Configurator User Manual • DNP3 Technical Manuals • Protocol Technical Manuals • Communication Interfaces Manual
Configuring security on your RTU	• Security Quick Start Guide • Security Administrator User Manual • Security Technical Reference Manual
Operating and troubleshooting your RTU	• SCADAPack E Operational Reference Manual
Installing SCADAPack E Target 5 Workbench, using it	• SCADAPack Workbench Quick Start

to build custom applications for the RTU and downloading the applications to the RTU	Guide • SCADAPack E Target 5 Technical Manuals
Installing ISaGRAF 3 Workbench, using it to build custom applications for the RTU and downloading the applications to the RTU	• ISaGRAF 3 Quick Start Guide • ISaGRAF 3 Technical Manuals
Adding I/O expansion modules	• SCADAPack E I/O Expansion Reference Manual • SCADAPack System Configuration Guide • I/O Expansion Module Hardware Manuals

4 About the SCADAPack 530E

The SCADAPack 530E Remote Terminal Unit (RTU) is a smart, microprocessor-based telemetry and control device that can help to remotely monitor and control physical objects. For example, in a water management environment, the SCADAPack 530E can be used to monitor and control the valves on flow-monitoring devices at pumping stations. The RTU's 1 ms Sequence of Event (SOE) event monitoring capability is well suited to telemetry applications that require high-speed time-stamping and data capture.

SCADAPack 530E

Roles

The SCADAPack 530E can be configured to play one or more of the following roles in your Supervisory Control and Data Acquisition (SCADA) environment:

- RTU endpoint
- DNP3 router between any combination of Ethernet and serial ports
- DNP3 peer-to-peer communications device
- Data concentrator for:
  - Remote DNP3 and DNP3 IP slaves
  - Local DNP3, DNP3 IP, Modbus RTU, Modbus TCP and DF1 serial slaves
  - Local IEC 60870-5-103 protection relays
- Protocol converter for:
  - Modbus RTU and Modbus TCP to DNP3 and DNP3 IP, and vice-versa
  - Modbus RTU and Modbus TCP to IEC 60870-5-101/-104

- DF1 to DNP3 and DNP3 IP, IEC 60870-5-101/-104 or Modbus RTU and Modbus TCP
- IEC 60870-5-103 to DNP3/DNP3 IP, IEC 60870-5-101/-104 or Modbus RTU and Modbus TCP

The role your SCADAPack 530E plays in your SCADA environment determines how you should set up communications to and from the RTU and how you should configure the RTU.

Communications

The SCADAPack 530E includes four serial ports and three Ethernet ports that are available for communications with the SCADA master system, with other RTUs, with devices such as Programmable Logic Controllers (PLCs), and with the local configuration software. It also includes a USB 2.0 device port for local configuration and a USB 2.0 host port that supports plug-in media.

A socket modem port that supports GPRS, 3G or LTE communications with remote devices will be available at a later date.

The SCADAPack 530E communicates using the Distributed Network Protocol (DNP) 3, IEC 60870-5 and Modbus protocols.

Inputs and Outputs

The SCADAPack 530E provides two digital inputs and one digital output. I/O can be extended by adding up to 16 I/O expansion modules. The SCADAPack 530E supports the 6601 I/O expansion module which provides the following I/O:

- 16 digital inputs
- 8 digital outputs
- 6 analog inputs
- 2 analog outputs (this option is selected when the 6601 I/O expansion module is ordered)

Configuration

You can configure the SCADAPack 530E using three different methods:

- Locally or remotely using SCADAPack E Configurator 85, a software application that runs on a desktop or laptop computer connected to the RTU through the USB device port or through any of the available serial or Ethernet ports.
- Remotely as part of an end-to-end SCADA system using the StruxureWare SCADA Expert ClearSCADA software.
- Locally using applications created in the SCADAPack Workbench or ISaGRAF 3 Workbench user programming tools. Typically, applications created in these tools extend and enhance the functionality provided by the RTU. However, you can also write applications that replace the configuration functionality provided through the SCADAPack E Configurator software or the SCADA Expert ClearSCADA software.

Before you begin configuring the RTU, determine whether the ClearSCADA software will be used for any configuration tasks. This documentation assumes you are using the SCADAPack E Configurator software to configure the RTU. For information about using the ClearSCADA software, see the ClearSCADA documentation.

Security

The RTU can communicate using the DNP3 protocol, which is level 4-compliant. The DNP3 protocol

supports the optional DNP3 Secure Authentication (SAv2) features and AGA-12 DNP3 Data Encryption to help improve message confidentiality.

5 Hardware Overview

The figure below shows the locations of the inputs, outputs and ports on the SCADAPack 530E.

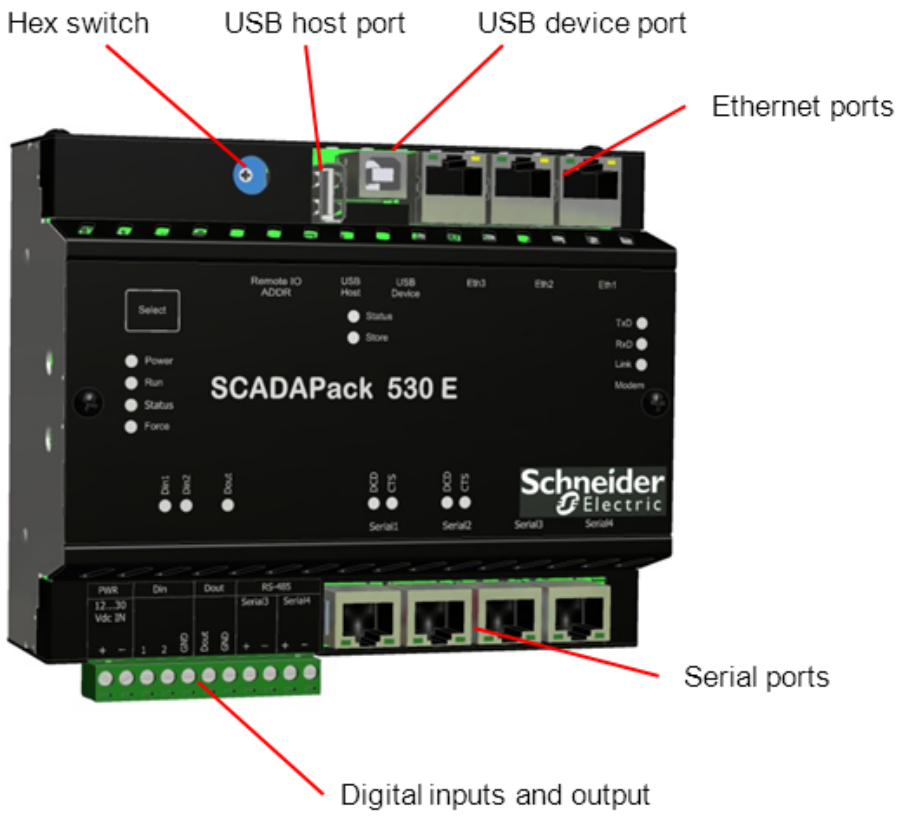

SCADAPack 530E Inputs, Outputs and Ports

Generally, power supply ports and input/output (I/O) ports provide a level of protection against over-voltages and other conditions. For ease of wiring and maintenance, external connections are terminated on removable connectors. If you need to remove the RTU cover for any reason, first carefully consider the following information.

⚠WARNING

UNEXPECTED EQUIPMENT OPERATION

Evaluate the operational state of the equipment being monitored or controlled by the RTU or the I/O module before removing power.

Failure to follow these instructions can result in death or serious injury.

⚠WARNING

HAZARD OF ELECTRIC SHOCK

Remove power from the RTU before removing the RTU cover.

Failure to follow these instructions can result in death or serious injury.

NOTICE

UNEXPECTED EQUIPMENT OPERATION

The electronics inside the RTU can be damaged by static electricity. If you need to remove the RTU cover, wear an anti-static wrist strap that is connected to ground. Failing to follow this simple step can cause intermittent or total loss of RTU operation and will void the warranty.

Failure to follow these instructions can result in equipment damage.

The table below provides an overview of the major hardware components that comprise the RTU. For complete hardware specifications, see the Specifications 111 section.

SCADAPack 530E Hardware Summary

Controller board	
CPU 19	• ST SPEAr 1380 32-bit, dual-core Cortex™ A9 microcontroller • Up to 600 MHz
Memory 19	• 128 MB NAND Flash • 128 MB DDR3 RAM
Event logging	• Up to 40,000 events total • 1 ms Sequence of Event (SOE) time stamping for digital inputs • 30 ms SOE time stamping for analog inputs
Database points	• Up to 20,000 points total
Power requirements 46	• SCADAPack 530E Controller: 3.7 W • 6601 I/O expansion module: 1.1 W • USB (5 V at 100 mA): 0.6 W • Serial port (5 V at 250 mA): 1.5 W
Environmental	• -40°C … 70°C (-40°F…158°F) operating temperature when mounted on a horizontally oriented DIN rail

requirements	• -40°C … 65°C (-40°F…149°F) operating temperature when mounted on a vertically oriented DIN rail • -40°C … 85°C (-40°F…185°F) storage temperature • 5% to 95% relative humidity, non-condensing • Pollution Degree 2, Installation Category I, Indoor use
Inputs and outputs	
Digital inputs 36	• 2
Digital outputs 37	• 1
Expansion I/O support 48	• 6601 input/output module with optional analog output module
Communications	
Serial ports 21	• 2 RS232 • 2 RS232 or RS485
Ethernet ports 27	• 3 UTP 10/100BASE-T
USB ports 30	• 1 USB 2.0-compliant A-type receptacle • 1 USB 2.0-compliant B-type receptacle
Socket modem ports	• 1 (not currently active)
Serial protocols	• DNP3 level 4 in slave or master mode • IEC60870-5-101 in slave mode • Modbus RTU in slave or master mode • DF1 in master mode
IP protocols	• DNP3 level 4 in TCP slave or master mode • DNP3 level 4 in UDP slave or master mode • DNP3 in peer-to-peer mode • IEC60870-5-104 in slave mode • Modbus TCP in server or client mode • Modbus RTU in TCP client mode

5.1 CPU, RAM and Storage

CPU

The CPU executes a preemptive multitasking operating system, allowing simultaneous, real-time provisioning of:

- Communications protocols such as DNP3, TCP/IP, IEC 60870-5-101, IEC 60870-5-103, IEC 60870-5-104 and Modbus
- Time-stamped event processing
- Configuration management
- User-created sequence and control applications such as those created in SCADAPack Workbench or ISaGRAF 3 Workbench

RAM

The onboard battery-backed RAM is used to store:

- Configuration information such as point definitions and port configurations
- User-created sequence and control applications such as those created in SCADAPack Workbench or ISaGRAF 3 Workbench
- Time-stamped event data

Storage

The RTU provides internal flash storage and support for USB storage media. The internal flash storage is described here. For more information about support for plug-in storage media, see USB Ports 30.

Operating System Flash

The operating system flash stores the RTU firmware. The firmware implements the communications protocols — DNP3, TCP/IP, Modbus and others — the database of point configurations and the SCADAPack Workbench or ISaGRAF 3 Workbench kernel that runs the user-created sequence and control applications.

The use of flash memory chips allows you to transfer new firmware locally through a serial port and remotely using command line instructions without removing the RTU front cover.

Boot Monitor Flash

The boot monitor firmware resides in a separate flash memory chip on the controller board. The boot monitor firmware is the first code executed by the CPU when power is applied to the RTU. It configures the RTU hardware then verifies, loads and executes the operating system firmware.

The boot monitor also provides facilities for reprogramming the operating system and boot monitor flash memory.

5.2 Power Supply and Back-up Battery

The RTU is powered by a 12...30 Vdc power supply that is connected to the power input connectors on the RTU. The illustration below shows the location of the power input connectors.

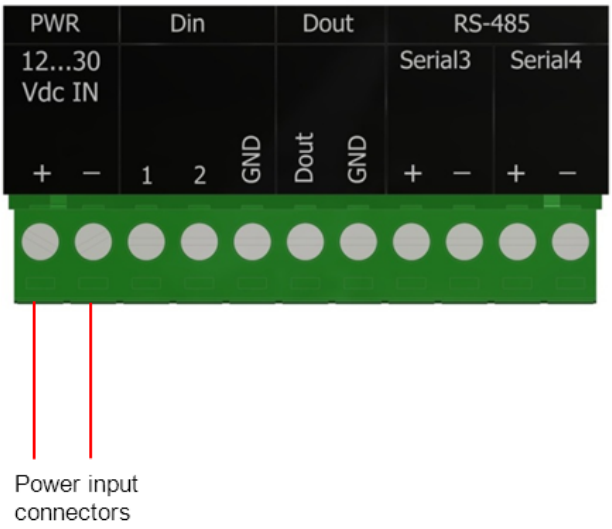

Power Input Connectors

For details about power supply requirements, see Power Supply Requirements 46.

A Tadiran TL-5186 3.6 V lithium battery installed on the RTU controller board provides back-up power to the RTU's real-time clock and RAM memory. It also maintains the RTU configuration during a power-supply interruption.

5.3 Serial Ports

The figure below shows the location of the four RS232 serial ports and the two RS485 screw-termination connectors on the SCADAPack 530E.

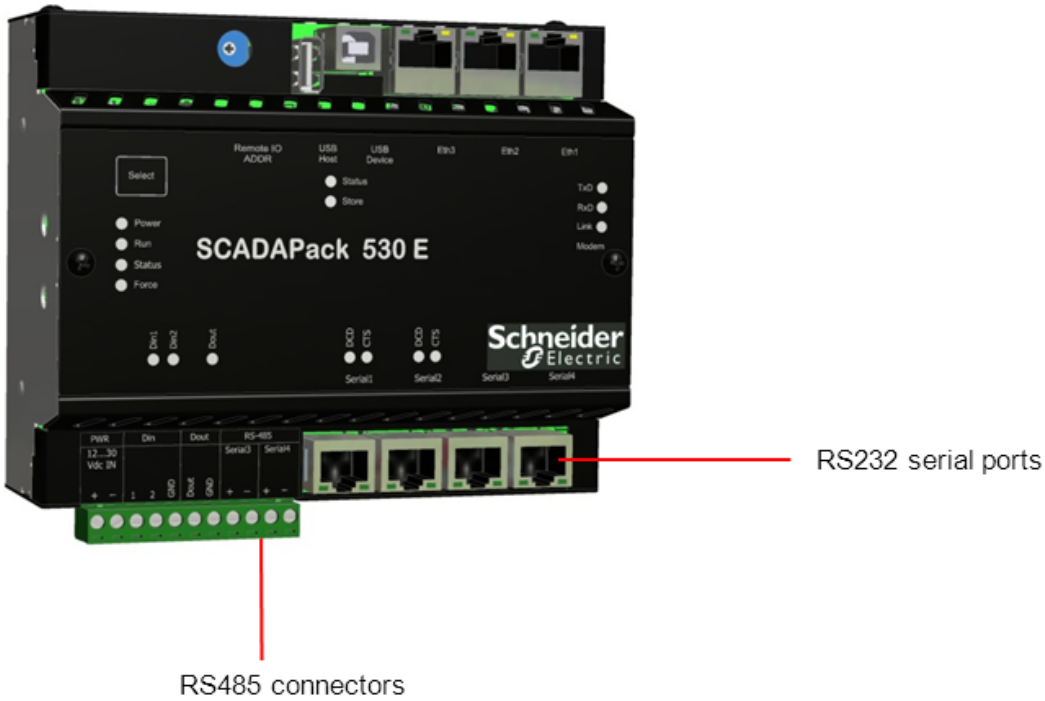

SCADAPack 530E RS232 and RS485 Serial Interfaces

- Serial1 and Serial2 Ports 22
- Serial3 and Serial4 Ports 24

5.3.1 Serial1 and Serial2 Ports

Serial1 and Serial2 are general-purpose serial data communications ports that can be used for RS232 communications with the SCADA master system, with other RTUs, with devices such as Programmable Logic Controllers (PLCs), and with the SCADAPack E Configurator computer.

Serial1 and Serial2 can also be used for ES Remote I/O communications when the RTU is functioning as a Main RTU in an ES Remote I/O configuration.

The figure below shows a close-up view of the RS232 serial ports and their LEDs.

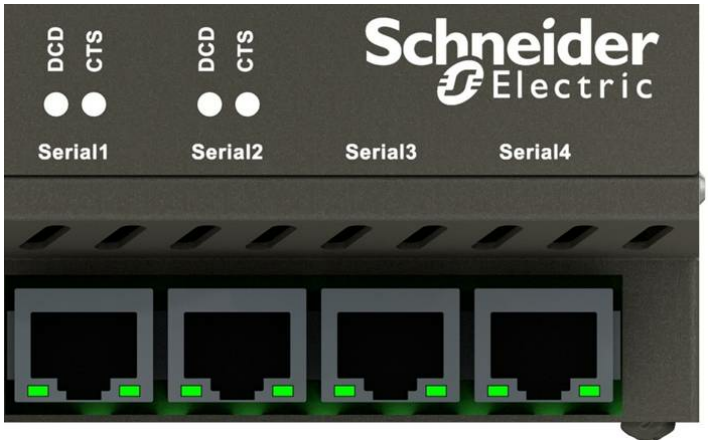

Serial Ports

For information about Serial3 and Serial4, see Serial3 and Serial4 Ports 24.

Configuration

Serial1 and Serial2 support RS232 with modem control.

Using the SCADAPack E Configurator software, you can configure Serial1 and Serial2 to define the port function, mode, baud and data mode, as summarized in the table below.

Serial1 and Serial2 Configuration Parameters

Function	Mode	Baud	Data Mode
ISaGRAF (default for Serial1) DNP3 (default for Serial2) Cmd Line PLC Device ISaGRAF-User	RS232 (RTS On) (default) RS232 (RTS Keyed) Hayes Modem GPRS 1xRTT RS232 (RTS Off)	300 bps 600 bps 1200 bps 2400 bps 4800 bps 9600 bps (default) 19200 bps	8-bit No Parity 1 Stop Bit (default) 8-bit Even Parity 1 Stop Bit 8-bit Odd Parity 1 Stop Bit

ES Remote I/O PPP/TCPIP TCP Service Modbus Slave DNP-VT Service IEC-103 Master IEC-101 Slave		38400 bps 57600 bps 115,200 bps	7-bit Even Parity 1 Stop Bit 7-bit Odd Parity 1 Stop Bit 8-bit No Parity 2 Stop Bits

For more information about configuring serial ports, see the SCADAPack E Configurator User Manual and the Communication Interfaces Technical Reference Manual.

Cabling

Serial1 and Serial2 support RS232 serial cables with an eight-pin RJ45 Data Terminal Equipment (DTE) connector. For more information, see:

- RS232 Pin Assignments and Cable Descriptions 68
- RS232 Wiring Examples 73

LEDs

The following table describes the Serial1 and Serial2 LEDs on the RTU front panel and on the physical ports.

Serial1 and Serial2 LED Status Indications

LED	Color	Description
CTS	Green	Lit when the CTS input is active on this serial port.
DCD	Green	Lit when the DCD input is active on this serial port.
Left side of the physical port	Green	Blinks when the port is transmitting data over the RS232 serial connection.
Right side of the physical port	Green	Blinks when the port is receiving data over the RS232 serial connection.

For more information, see LEDs 90.

HMI Power Control

Pin 1 of the RJ45 connector for Serial1 and Serial2 provides switched 5 V power for the SCADAPack Vision or another human-machine interface (HMI). Use the **Vision Power Pin Enabled** check box on the **Controller Settings** property page in SCADAPack E Configurator to enable and disable the voltage output for pin 1.

Binary system point 50750 indicates the status of power to pin 1. The system point is set when the power to pin 1 is on, and is cleared when the power to pin 1 is off.

For more information, see the SCADAPack E Configurator User Manual and the Configuration Technical Reference Manual

Specifications

For serial port specifications, see Communications Specifications 116.

5.3.2 Serial3 and Serial4 Ports

Serial3 and Serial4 are general-purpose serial data communications ports that can be used for RS232 or RS485 communications with the SCADA master system, with other RTUs, with devices such as Programmable Logic Controllers (PLCs), and with the SCADAPack E Configurator computer.

Serial3 and Serial4 can also be used for ES Remote I/O communications when the RTU is functioning as a Main RTU in an ES Remote I/O configuration.

The figure below shows a close-up view of the serial ports and their LEDs along with the RS485 screw-termination connectors for Serial3 and Serial4.

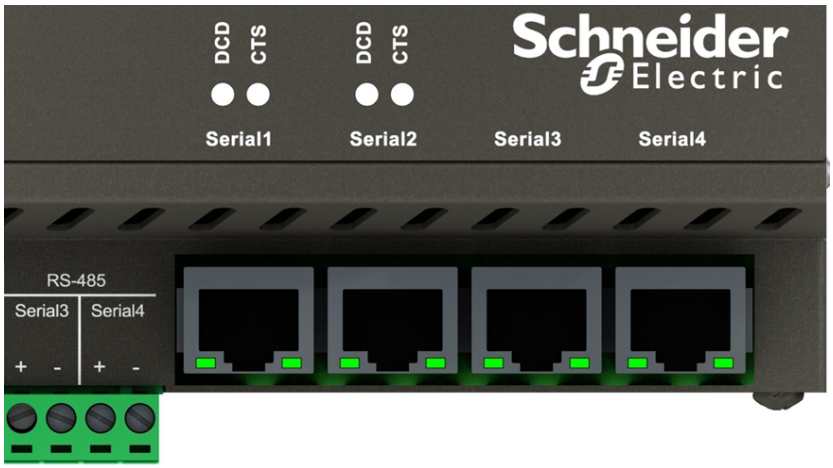

Serial Ports

For information about Serial1 and Serial2, see Serial1 and Serial2 Ports 22.

Configuration

Serial3 and Serial4 are software configurable for three-wire RS232 communications or two-wire RS485 communications.

Using the SCADAPack E Configurator software, you can configure each of the serial ports to define its function, mode, baud and data mode, as summarized in the table below.

Function	Mode	Baud	Data Mode
ISaGRAF DNP3 (default for Serial3) Cmd Line (default for Serial4) PLC Device ISaGRAF-User ES Remote I/O TCP Service Modbus Slave DNP-VT Service IEC-103 Master IEC-101 Slave	RS232 (default) RS485 2w	300 bps 600 bps 1200 bps 2400 bps 4800 bps 9600 bps (default) 19200 bps 38400 bps 57600 bps 115,200 bps	8-bit No Parity 1 Stop Bit (default) 8-bit Even Parity 1 Stop Bit 8-bit Odd Parity 1 Stop Bit 7-bit Even Parity 1 Stop Bit 7-bit Odd Parity 1 Stop Bit 8-bit No Parity 2 Stop Bits

For more information about configuring serial ports, see the SCADAPack E Configurator User Manual and the Communication Interfaces Technical Reference Manual.

Cabling

NOTICE

UNEXPECTED EQUIPMENT OPERATION

Serial3 and Serial4 support RS232 or RS485 operation, but not both at the same time. If Serial3 or Serial4 is configured for RS485 operation, the port must remain empty.

- Do not insert an RS232 cable into Serial3 if there is a two-wire RS485 connection to the screw-termination connectors labeled Serial3+ and Serial3-.
- Do not insert an RS232 cable into Serial4 if there is a two-wire RS485 connection to the screw-termination connectors labeled Serial4+ and Serial4-.

Failure to follow these instructions can result in equipment damage.

When configured as RS232, the Serial3 and Serial4 serial ports support RS232 serial cables with an eight-pin RJ45 Data Terminal Equipment (DTE) connector. For more information, see:

- RS232 Pin Assignments and Cable Descriptions 68
- RS232 Wiring Examples 73

When configured as RS485, the Serial3 and Serial4 screw-termination connectors support wired connections:

- If Serial3 is configured as RS485, you can create a two-wire RS485 connection to the screw-termination connectors labeled Serial3+ and Serial3-.
- If Serial4 is configured as RS485, you can create a two-wire RS485 connection to the screw-termination connectors labeled Serial4+ and Serial4-.

A maximum of 32 RTUs and other devices can be connected to any one RS485 network.

For more information, see:

- Wiring Screw-Termination Connectors 65
- RS485 Wiring 75

LEDs

The following table describes the Serial3 and Serial4 LEDs.

Serial3 and Serial4 LED Status Indications

LED	Color	Description
Left side of the physical port	Green	Blinks when data is being transmitted over the RS232 or RS485 serial connection. If the port is configured for RS485, the LEDs on the empty port indicate that data is being transmitted over the wired RS485 connection.
Right side of the physical port	Green	Blinks when data is being received over the RS232 or RS485 serial connection. If the port is configured for RS485, the LEDs on the empty port indicate that data is being received over the wired RS485 connection.

For more information, see LEDs 90.

HMI Power Control

Pin 1 of the RJ45 connector for Serial3 and Serial4 provides switched 5 V power for the SCADAPack Vision or another human-machine interface (HMI). Use the **Vision Power Pin Enabled** check box on the **Controller Settings** property page in SCADAPack E Configurator to enable and disable the voltage output for pin 1.

Binary system point 50750 indicates the status of power to pin 1. The system point is set when the power to pin 1 is on, and is cleared when the power to pin 1 is off.

For more information, see the SCADAPack E Configurator User Manual and the Configuration Technical Reference Manual.

Specifications

For serial port specifications, see Communications Specifications 116.

5.4 Ethernet Ports

The figure below shows the location of the three Ethernet ports on the SCADAPack 530E.

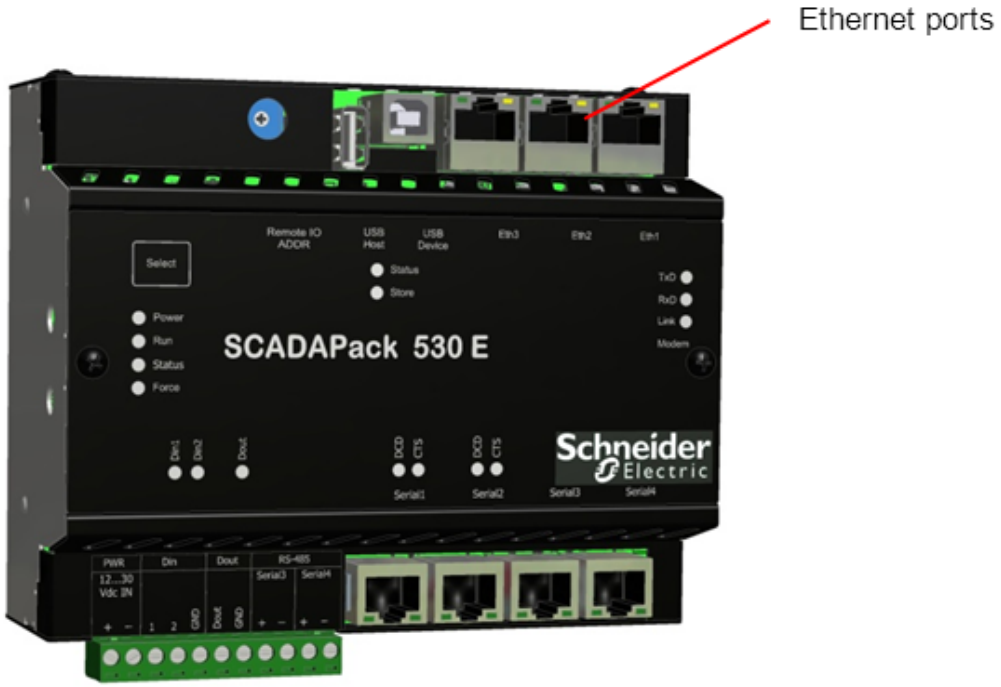

SCADAPack 530E Ethernet Ports

- Eth1, 2, 3 Ports 28

5.4.1 Eth1, 2, 3 Ports

The three Ethernet ports are UTP 10/100BASE-T LAN ports that can be used for IP communications and for ES Remote I/O communications when the RTU is functioning as a Main RTU in an ES Remote I/O configuration. The Ethernet ports are typically used for point-to-point Ethernet connections and are usually connected to an Ethernet hub or switch, although it is also possible to connect devices together directly.

Each Ethernet port can run at 10 Mbps or 100 Mbps, at half or full duplex. The RTU automatically detects an active Ethernet port and the supported speed of the connected device, giving preference to 100 Mbps full duplex connections.

The following figure shows a close-up view of the three Ethernet ports and their LEDs.

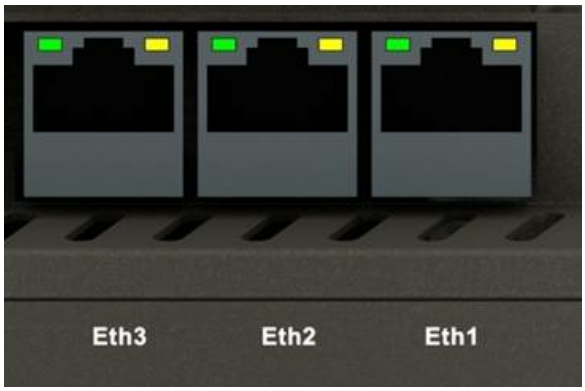

Ethernet Ports

Configuration

Using the SCADAPack E Configurator software, you can configure each of the Ethernet ports to define its:

- Function: TCP/IP + RemIO (default) or ES Remote I/O
- IP Address
- Subnet Mask

For more information about configuring Ethernet ports, see the SCADAPack E Configurator User Manual and the TCP/IP Technical Reference Manual.

Cabling

The Ethernet ports support crossover or straight-through Ethernet cables with an eight-pin RJ45 connector. The RTU will automatically detect the interface used and serve the cable appropriately.

For more information, see Ethernet Pin Assignments and Cable Descriptions 76.

LEDs

The following table describes the Ethernet LED status indications.

Ethernet LED Status Indications

Location	Color	Description
Left side of the physical port	Green	Activity LED. Lit when the Ethernet port is active. Blinks when the port is transmitting or receiving data.
Right side of the physical port	Yellow	Link LED. Lit when the 10/100 Ethernet link is active.

For more information, see LEDs 90.

Specifications

For Ethernet port specifications, see Communications Specifications 116.

5.5 USB Ports

The USB host and USB device ports on the RTU are USB 2.0-compliant ports that support 1.5 Mb/s and 12 Mb/s communications. The USB ports automatically detect and support the data rate of the connected device. The two USB ports can be used simultaneously.

The figure below shows the location of the two USB ports on the SCADAPack 530E.

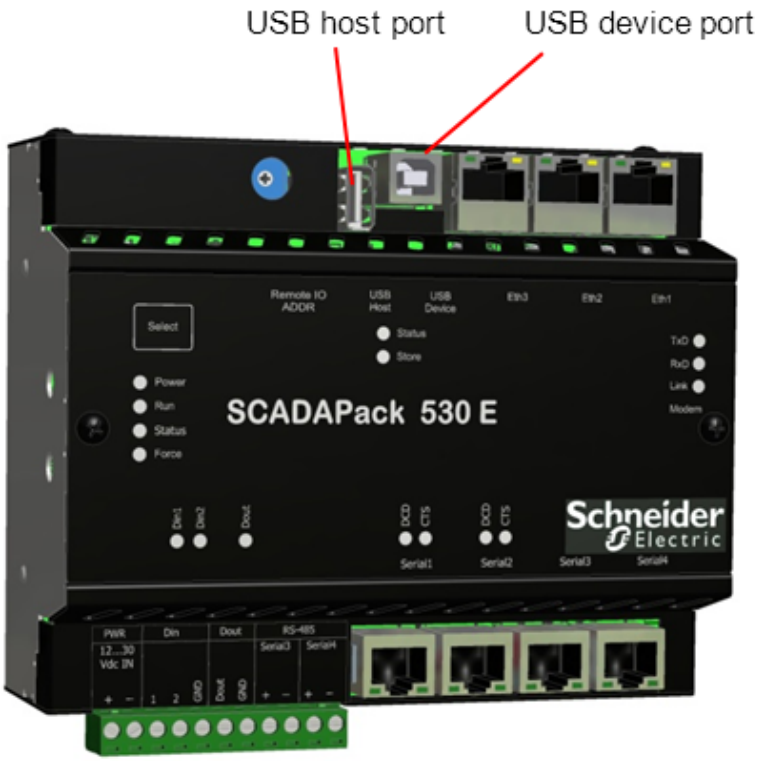

SCADAPack 530E USB Ports

- USB Host Port 31
- USB Device Port 33

5.5.1 USB Host Port

The USB host port is a USB series A receptacle that allows the RTU controller board to act as a host for a plug-in USB drive. For bus-powered USB devices, the host port can provide up to 100 mA at 5 V.

The USB host port is not user configurable. It can be mounted and accessed through the RTU file system at /usb0. For information about support for plug-in USB drives, see Data Capacity 115.

⚠WARNING

EXPLOSION RISK

Do not use USB ports in hazardous applications or hazardous locations.

Use USB ports only for non-hazardous applications in locations that are known to be in a non-hazardous state.

Failure to follow these instructions can result in death or serious injury.

⚠WARNING

UNEXPECTED EQUIPMENT OPERATION

Verify that the data transfer between the RTU and the plug-in USB drive is complete before removing the USB drive from the USB host port.

Removing a plug-in USB drive from the host port while the data transfer is in progress can impact system performance and result in a system restart.

Failure to follow these instructions can result in death or serious injury.

The following illustration shows the connections for the USB host port.

USB series “A” receptacle

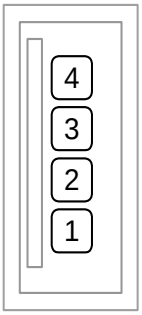

1. VBUS
2. D-
3. D+
4. GND

USB Host Port Connections

LEDs

The following table describes the USB host port LEDs on the RTU front panel.

USB Host Port LED Descriptions

LED	Color	Description
Status	Green	This LED is under the control of Binary System Point 50753. It can be controlled by a SCADAPack Workbench or ISaGRAF 3 Workbench application or through protocol control commands.
Store	Green	Flashes on and off alternately at a steady rate for five seconds when data from the USB mass storage device is successfully loaded into the RTU.

5.5.2 USB Device Port

The USB device port is a USB series B receptacle that provides DNP3 communications for local connection to a local USB device, such as the computer running the SCADAPack E Configurator software.

⚠WARNING

EXPLOSION RISK

Do not use USB ports in hazardous applications or hazardous locations.

Use USB ports only for non-hazardous applications in locations that are known to be in a non-hazardous state.

Failure to follow these instructions can result in death or serious injury.

Configuration

Using the SCADAPack E Configurator software, you can configure the USB device port for DNP3 communications. This is the default configuration for the port. The USB device port is referred to as Port 0 in the SCADAPack E Configurator software and in SCADAPack E diagnostics.

The following illustration shows the connections for the USB device port.

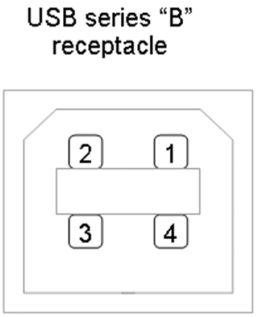

USB Device Port Connections

5.6 Inputs and Outputs

The SCADAPack 530E provides two digital inputs and one digital output.

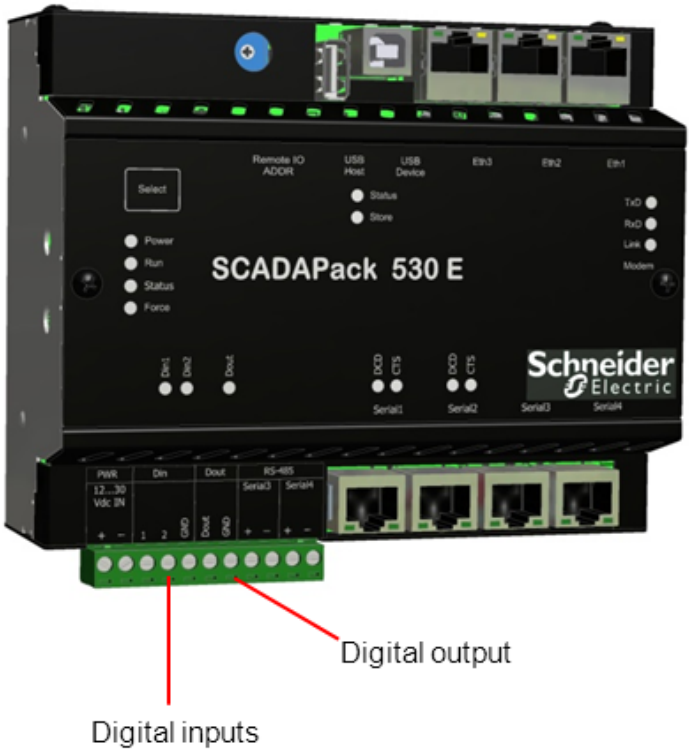

SCADAPack 530E Inputs and Outputs

The following table describes the SCADAPack 530E input and output characteristics.

SCADAPack 530E Input and Output Characteristics

Name	RTU Label	Polarity Sensitive	Description
Digital input 1	Din1	Yes	• Digital input. • Not isolated from RTU logic.
Digital input 2	Din2	Yes	• Digital input. • Not isolated from RTU logic.
Digital output 1	Dout	Yes	• Open drain. Form A. • Not isolated from RTU logic.

The digital inputs and digital output use 5 mm (0.197 in.) pitch connectors. For information about wiring these connectors, see Wiring Screw-Termination Connectors 65.

The inputs and outputs on the RTU can be:

- Monitored and controlled from a SCADA master station
- Monitored and controlled from a remote outstation
- Locally controlled using an application created in SCADAPack Workbench or ISaGRAF 3 Workbench
- Any combination of the above

Data that is received and sent through the inputs and output can be:

- Transferred to an attached Programmable Logic Controller (PLC) for processing by that PLC
- Time stamped and stored locally for manual or automatic retrieval

These capabilities are provided by the RTU firmware. For more information, see the SCADAPack E Technical Overview.

I/O can be extended by adding up to 16 6601 I/O expansion modules.

- Digital Inputs 36
- Digital Output 37

5.6.1 Digital Inputs

Digital inputs are used to monitor the state of remote devices such as panel lamps, relays, motor starters, solenoid valves and other devices.

Digital inputs are available for nominal 12...24 V operation. A current-limiting resistor on each input determines the voltage range.

Wetting voltage for the volt-free contacts is usually provided by the DC power used with the RTU.

The digital inputs provide 1 ms Sequence of Event (SOE) time stamping to support Sequence Of Event (SOE) applications.

The digital inputs also support state debouncing. If debouncing is enabled on a digital input channel, then SOE time stamping on the digital point has the same resolution as the debounce resolution.

The LED for each digital input is lit when the input is active.

Configuration

Using the SCADAPack E Configurator software, you can configure each digital input to define its characteristics, including:

- DNP3 attributes
- Alarm and trend attributes
- Invert state
- Remote control interlock attributes
- Debounce time

For more information about configuring digital inputs, see the SCADAPack E Configurator User Manual and the Configuration Technical Reference Manual.

Wiring

Digital inputs support solid or stranded wires from 3.3 mm^2 to .08 mm^2 (12 AWG to 28 AWG). For more information, see Wiring Screw-Termination Connectors 65.

Specifications

For digital input specifications, see Specifications 111.

5.6.2 Digital Output

Digital outputs are used to control panel lamps, relays, motor starters, solenoid valves and other devices. The relay outputs are well suited to applications that cannot tolerate any off-state leakage current, that require high load currents, or that involve non-standard voltages or current ranges.

For Form A digital outputs that have a single Normally Open (NO) contact, loads can be connected to either the high or the low side of the power source.

For Form C digital outputs that have an NO contact, a Normally Closed (NC) contact and a Common (COM) contact, loads can be connected to either the NO or the NC terminal, and to either the high or the low side of the power source. A signal from the second pole on each relay provides feedback to the software to verify the correct relay activation for each operation.

The LED for each digital output is lit when the NO contact is closed, or activated, and the circuit is continuous. For Form C digital outputs, this means the NC contact is open.

Configuration

Using the SCADAPack E Configurator software, you can configure each digital output to define its characteristics, including:

- DNP3 attributes
- Alarm and trend attributes
- Invert state
- Remote control interlock attributes
- Output pulse time

For more information about configuring digital outputs, see the SCADAPack E Configurator User Manual and the Configuration Technical Reference Manual.

Wiring

Digital outputs support solid or stranded wires from 3.3 mm^2 to .08 mm^2 (12 AWG to 28 AWG).For more information, see Wiring Screw-Termination Connectors 65.

Specifications

For digital output specifications, see Specifications 111.

5.7 Ground Connectors

The RTU provides two ground connectors labeled GND on the controller board I/O terminal block. The ground terminals are typically used with connections to analog input and analog output devices.

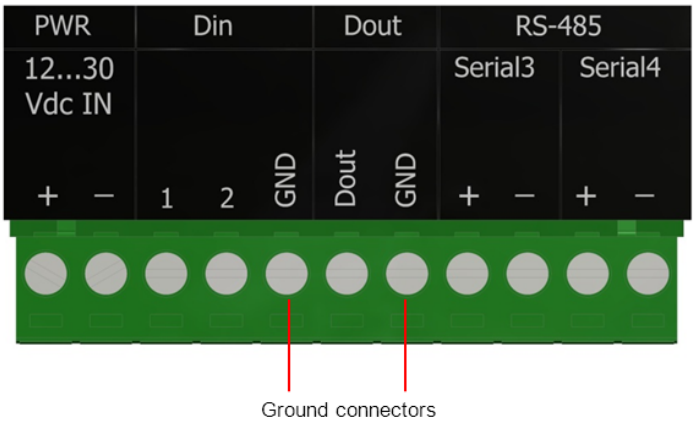

RTU Ground Connectors

The GND connectors can be used in individual connections, or they can be connected to a terminal strip that provides additional ground connection points.

5.8 Isolation and Protection Summary

The RTU is designed to provide isolation from external connections as described in the table below.

SCADAPack 530E Isolation and Protection

Connections	Isolation	Protection
Digital inputs	None	High-resistance current-limiting resistor
Digital output	None	Over-voltage (TVS)
Serial ports	None	ESD
Ethernet ports	Transformer	None
USB ports	None	ESD

6 Installation

The SCADAPack 530E is factory-configured and under normal conditions does not require removal or insertion of any peripherals or components. The configurations are stored in a combination of battery-backed RAM and flash memory.

The lithium-powered RAM back-up battery has a shelf life of approximately two years when the RTU is not connected to a power source. Battery life can be increased to more than eight years when the RTU is permanently connected to a power source.

NOTICE

UNEXPECTED EQUIPMENT OPERATION

RTU configuration information can be lost if the onboard RAM back-up battery goes flat, is disconnected, if the RTU is damaged, or if there has been a firmware upgrade.

Verify the voltage of the onboard RAM back-up battery before installing the RTU in the field.

Failure to follow these instructions can result in equipment damage.

NOTICE

UNEXPECTED EQUIPMENT OPERATION

Installing the RTU in an environment where the electromagnetic compatibility (EMC) rating exceeds the certified EMC rating for the RTU can lead to unpredictable operation and unexpected results.

Failure to follow these instructions can result in equipment damage.

6.1 Mounting the SCADAPack 530E

The SCADAPack 530E mounts on a 7.5 mm x 35 mm (0.3 in. x 1.4 in.) DIN rail. The figures below show the RTU dimensions when mounted.

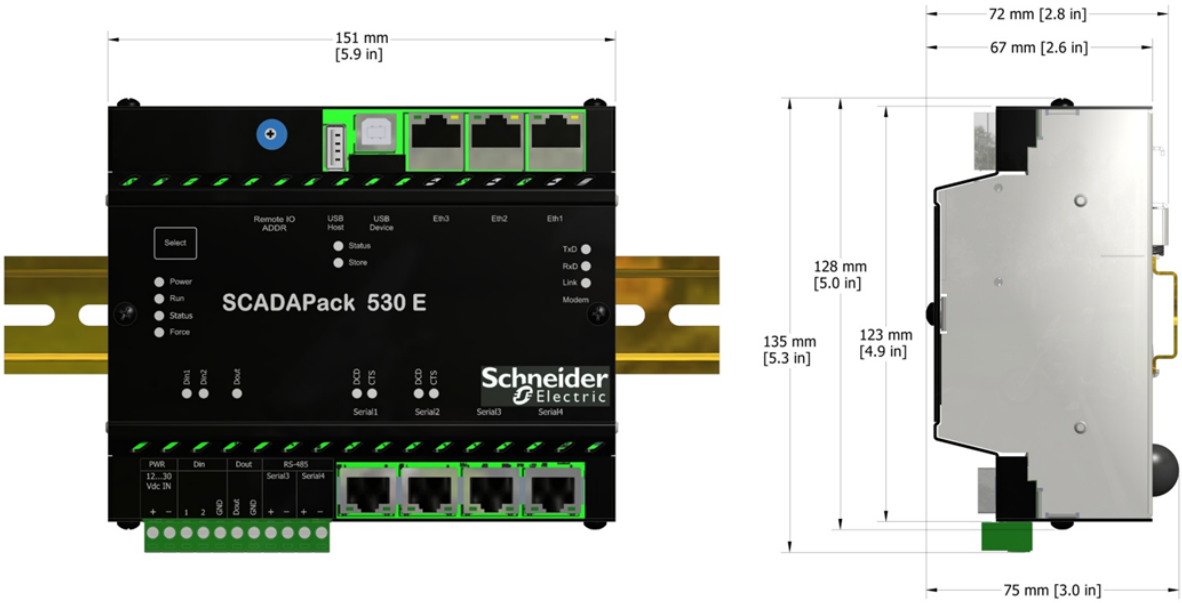

SCADAPack 530E Dimensions

⚠WARNING
UNEXPECTED EQUIPMENT OPERATION Evaluate the operational state of the equipment being monitored or controlled by the SCADAPack 530E before removing power. **Failure to follow these instructions can result in death or serious injury.**

⚠WARNING
HAZARD OF ELECTRIC SHOCK Remove power from the RTU before mounting it on a DIN rail. Do not remove the RTU cover when mounting the RTU. The RTU is designed so that it can be mounted on a DIN rail with the cover in place. **Failure to follow these instructions can result in death or serious injury.**

NOTICE

UNEXPECTED EQUIPMENT OPERATION

The RTU can be mounted on a horizontally oriented DIN rail or on a vertically oriented DIN rail.

The maximum temperature rating is lower when the RTU is mounted on a vertically oriented DIN rail. See the Specifications 112 for details.

Failure to follow these instructions can result in equipment damage.

NOTICE

UNEXPECTED EQUIPMENT OPERATION

Installing the RTU in an environment where the electromagnetic compatibility (EMC) rating exceeds the certified EMC rating for the RTU can lead to unpredictable operation and unexpected results.

Failure to follow these instructions can result in equipment damage.

To Mount a SCADAPack 530E

The illustrations below show how to mount the RTU on a horizontally oriented DIN rail. The steps to mount the RTU on a vertically oriented DIN rail are the same.

1. With the lower part of the RTU tilted away from the DIN rail, position the mounting guide line on the side of the RTU so that it is just above the top edge of the DIN rail.

   The springs on the back of the RTU should rest on the DIN rail and the edge of the DIN rail should be under the support claws that are adjacent to the springs, as shown below.

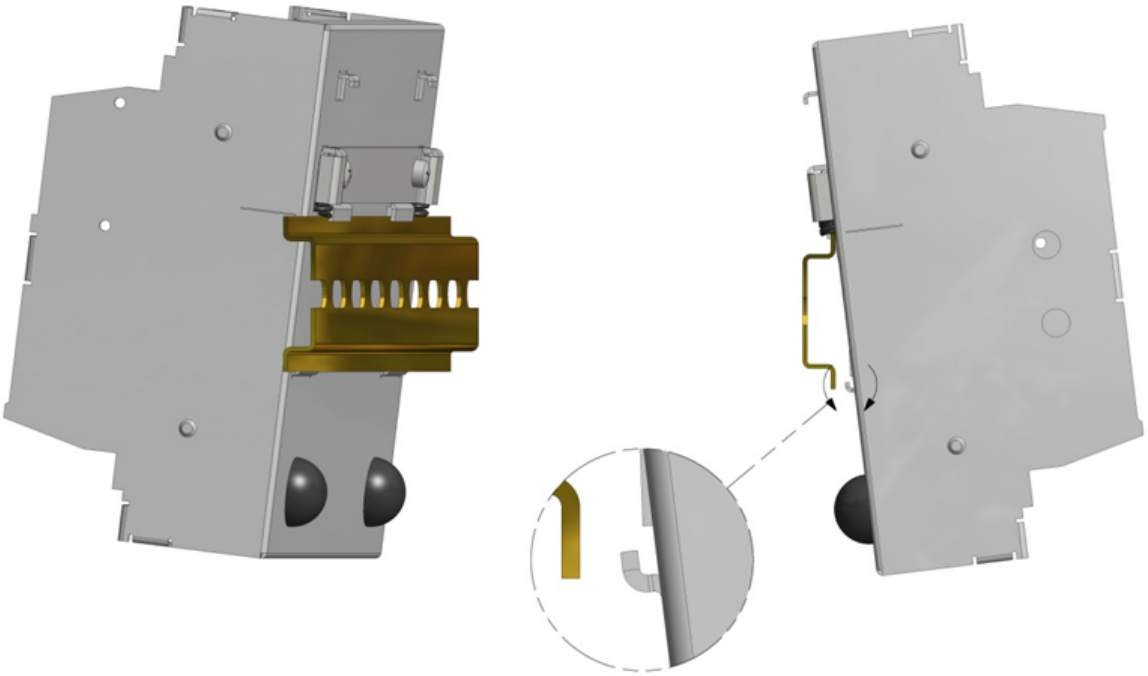

DIN Rail Alignment for RTU Mounting

2. Push firmly on the RTU while tilting it toward the DIN rail until the DIN rail is positioned under both the upper and lower claws on the back of the RTU.

3 Release the pressure on the springs so that the DIN rail is held firmly in place between the upper and lower claws.

The mounting guide line should be aligned with the edge of the DIN rail.

The figure below shows a SCADAPack 530E with the DIN rail correctly positioned in the upper and lower claws on the back of the RTU.

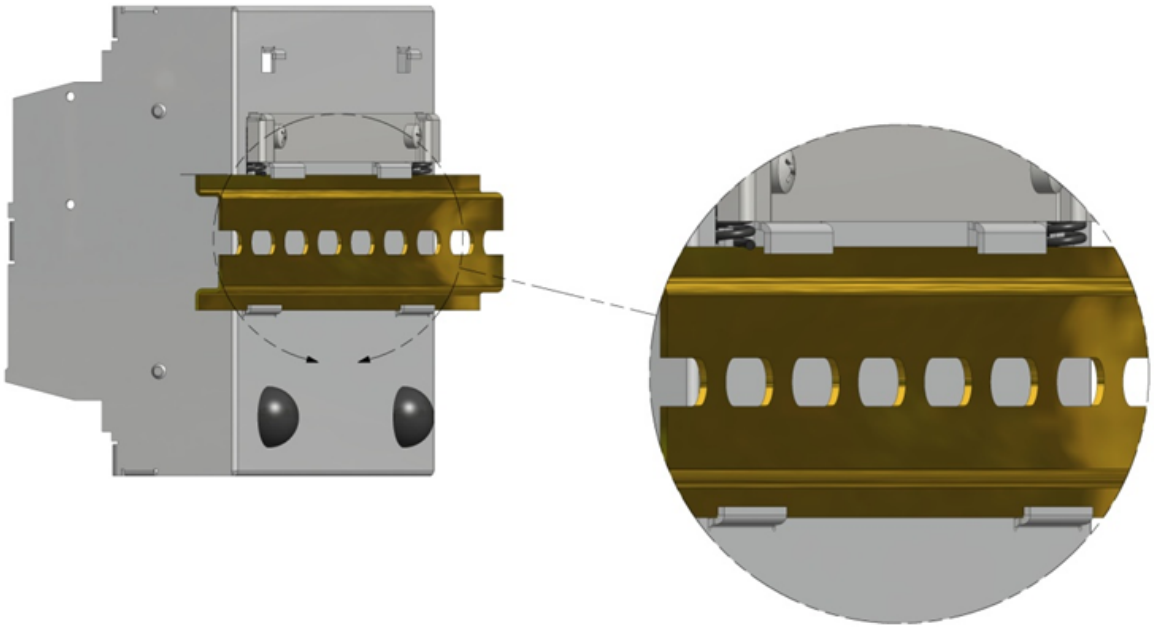

Rear View of a Correctly Mounted RTU

The figure below shows the front view of a SCADAPack 530E RTU that is mounted on a horizontally oriented DIN rail.

SCADAPack 530E on a Horizontally Oriented DIN Rail

6.2 Power Supply Requirements

The RTU is designed for 12...30 Vdc operating voltages and is powered through an 11-terminal connector.

Power requirements are determined by a combination of factors, including the number of relays energized, the number of LEDs activated, the number of Ethernet connections and the number of analog outputs.

The table below summarizes the power requirements for the SCADAPack 530E, with and without the 6601 I/O expansion module.

SCADAPack 530E Power Requirements

Volts In	SCADAPack 530E	SCADAPack 530E Plus One 6601 I/O Expansion Module	SCADAPack 530E Plus Two 6601 I/O Expansion Modules	SCADAPack 530E Plus Three 6601 I/O Expansion Modules	SCADAPack 530E Plus Four 6601 I/O Expansion Modules
Volts (V)	**Power (W)**	**Power (W)**	**Power (W)**	**Power (W)**	**Power (W)**
11	3.0	4.1	5.2	6.3	7.4
13.8	3.0	4.1	5.2	6.3	7.4
24	3.4	4.5	5.6	6.7	7.8
30	3.7	4.8	5.9	7.0	8.1

⚠WARNING

UNEXPECTED EQUIPMENT OPERATION

The input power supply must be a filtered DC supply.

Failure to follow these instructions can result in death or serious injury.

⚠WARNING

UNEXPECTED EQUIPMENT OPERATION

Safety Extra Low Voltage (SELV) or Protective Extra Low Voltage (PELV) power supplies are required on the power input and I/O points. Power supplies with 100...240 Vac inputs that comply with safety standard IEC/EN 60950 generally have SELV outputs. Check with the manufacturer or the agency certification listing to confirm that they have SELV outputs.

Failure to follow these instructions can result in death or serious injury.

The following Schneider Electric power supply can be used:

- Schneider Electric Phaseo regulated power supply, part number ABL 7RM24025, providing 100...240 Vac in and 24 Vdc, 2.5 A out.

Power Supply Wiring

NOTICE
UNEXPECTED EQUIPMENT OPERATION Install an external 1.6 A fast-acting fuse on the input voltage side of the power supply connection. **Failure to follow these instructions can result in equipment damage.**

The following figure illustrates power supply wiring. For details on wiring the power supply connectors, see Wiring Screw-Termination Connectors 65.

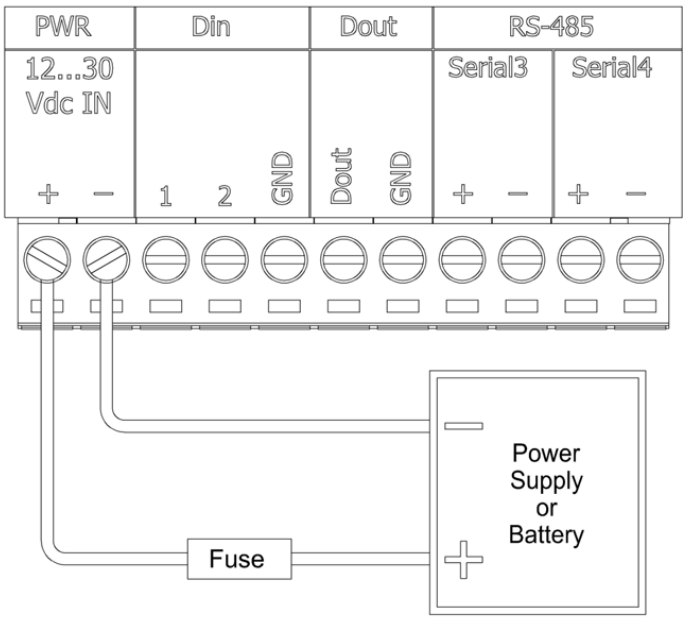

Power Supply Wiring

6.3 Adding Inputs and Outputs

I/O expansion modules allow you to increase the number of inputs and outputs the RTU monitors and controls.

The following table lists the I/O expansion modules that can be connected to the RTU.

I/O Expansion Module Support

I/O Expansion Module	Type	I/O Capacity
6601	Composite I/O	• 16 digital inputs, 8 of which have an associated counter • 8 digital (relay) outputs • 6 analog inputs • 2 analog outputs (this option is selected when the 6601 I/O expansion module is ordered)

For more information, see:

- Intermodule Cabling 49
- 6601 Hardware Manual

Power Requirements

The 6601 I/O expansion module requires 5 V power, which is provided by the RTU. However, if the analog output option was selected when the 6601 I/O expansion module was purchased, an additional 24 Vdc power supply is required to power the field-side circuitry. Each analog output module requires 50 mA current regardless of the system voltage.

For more information, see:

- Power Supply Specifications 113
- 6601 Hardware Manual

Mounting and Addressing

I/O expansion modules are mounted on a 7.5 mm x 35 mm (0.3 in. x 1.4 in.) DIN rail then connected to the RTU.

I/O expansion module addresses are configured using an onboard hex switch.

Up to 16 I/O expansion modules can be addressed on the RTU bus.

Configuration

Use the SCADAPack E Configurator software to configure the inputs and outputs on the I/O expansion module.

For more information, see:

- SCADAPack E Configurator User Manual
- Configuration Technical Reference Manual
- SCADAPack E I/O Expansion Reference Manual

6.3.1 Intermodule Cabling

SCADAPack E RTUs and 6601 I/O expansion modules are supplied with a short intermodule cable that connects the unit to an RTU or to an I/O expansion module.

⚠WARNING

UNEXPECTED EQUIPMENT OPERATION

Evaluate the operational state of the equipment being monitored or controlled by the RTU or the I/O expansion module before removing power.

Failure to follow these instructions can result in death or serious injury.

⚠WARNING

HAZARD OF ELECTRIC SHOCK

Remove power from the I/O expansion module before removing the I/O expansion module cover.

Remove power from the RTU before removing the RTU cover.

Failure to follow these instructions can result in death or serious injury.

NOTICE

UNEXPECTED EQUIPMENT OPERATION

The electronics inside the I/O expansion module and the RTU can be damaged by static electricity. If you need to remove the I/O expansion module or the RTU cover, wear an anti-static wrist strap that is connected to ground.

Failing to follow this simple step can cause intermittent or total loss of I/O expansion module and RTU operation and will void the warranty.

Failure to follow these instructions can result in equipment damage.

If you need to supply your own intermodule cable, follow these recommendations:

- Use the shortest length intermodule cable possible.
- The maximum total length of intermodule cables is 1.2 m (48 in.). This length restriction does not include the short intermodule cable supplied with the I/O expansion module. The maximum number of modules is 16.
- Intermodule cables should not be located near any electrical noise sources such as inductive load switching or variable frequency drives.
- Intermodule cables should not be installed in the same cable tray or in parallel with field wiring. Intermodule cables may cross field wiring at 90° if necessary.

- Connect the shielding wire on the intermodule cable to a convenient chassis ground point. There is a small hole in the I/O expansion module for grounding the shielding wire.
- Confirm that the power supply is rated for the total number of modules in the system.

For additional details, refer to the SCADAPack E I/O Expansion Reference manual.

The intermodule cable is connected from the SCADAPack E RTU to the 6601 I/O expansion module connector as shown in the illustrations below.

NOTICE

UNEXPECTED EQUIPMENT OPERATION

To help adequate air flow through the I/O expansion module, mount it upright on a DIN rail in the position shown below. Mounting the I/O expansion module in other positions can affect its operation at high temperatures, leading to unexpected results.

Failure to follow these instructions can result in equipment damage.

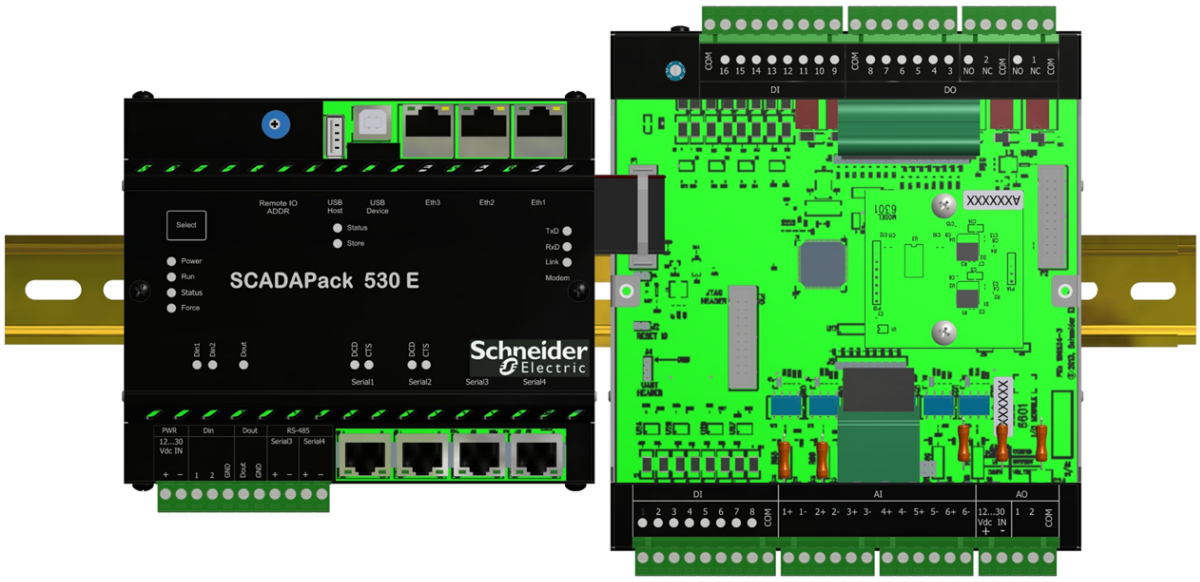

6601 I/O Expansion Module Connected to a SCADAPack 530E

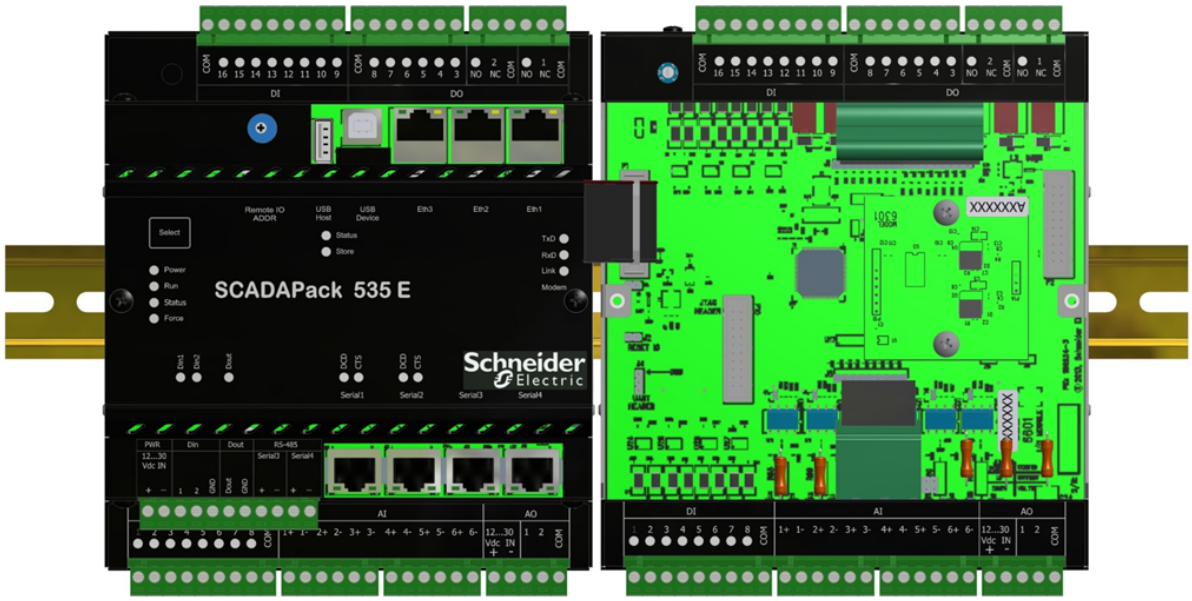

6601 I/O Expansion Module Connected to a SCADAPack 535E

7 Addressing and Startup Modes

Addressing

The SCADAPack 530E or SCADAPack 535E address only needs to be set when the RTU is replacing a SCADAPack ES that was operating as a Main unit for ES Remote I/O units. For details, see Setting the RTU Address for ES Remote I/O Operation in the SCADAPack 530E or SCADAPack 535E Hardware Manual.

In every other configuration, the RTU address should remain at its default setting of 0. That means:

- The physical hex switch on the RTU should remain at 0.
- The read-only analog system point 50002 displays 0 in the SCADAPack E Configurator **Point Browser** property page.

Startup Modes

By default, the RTU starts in Run mode when power is applied. Run mode is used for normal day-to-day operations.

Holding down the **Select** button on the RTU front cover allows you to start the RTU in other modes of operation. The startup mode is determined by the length of time the **Select** button is depressed when power is applied to the RTU or a controller board reset occurs. The longer the **Select** button is depressed, the more actions are applied to the RTU.

Because the startup mode is not determined until the **Select** button is released, you can cancel the startup mode selection by removing power to the RTU while the **Select** button is depressed. This can be a useful tactic to avoid starting up in modes where more actions are applied if you have held the **Select** button down longer than your preferred startup mode requires.

⚠WARNING

UNEXPECTED EQUIPMENT OPERATION

Evaluate the operational state of the equipment monitored and controlled by the RTU prior to initializing it.

Failure to follow these instructions can result in death or serious injury.

NOTICE

UNEXPECTED EQUIPMENT OPERATION

Starting the RTU in Cold Boot mode or Factory Boot mode returns RTU configuration parameters to their default settings and erases applications created in SCADAPack Workbench and ISaGRAF 3 Workbench. This information must be reloaded into the RTU for correct RTU operation.

Before starting the RTU in Cold Boot mode or Factory Boot mode, save a copy of the RTU configuration information, user-created applications, logs and other data to an external drive so it can be reloaded when the procedure is complete.

Failure to follow these instructions can result in equipment damage.

The following tables describe the four RTU startup modes and the actions that are applied in each case.

Startup Modes

Start Mode	Description
Run	• Automatically loads the RTU database • Executes SCADAPack Workbench and ISaGRAF 3 Workbench programs that are in RTU memory • Communicates about the RTU interfaces and configuration Start the RTU in Run mode for normal day-to-day operations.
Service	• Stops applications created in SCADAPack Workbench or ISaGRAF 3 Workbench • Overrides RTU ports with DNP3 communications at node address “0” so that the RTU can be reprogrammed and initialized
Cold Boot	• Initializes the RTU controller board • Erases applications created in SCADAPack Workbench or ISaGRAF 3 Workbench
Factory Boot	• Reformats the flash file system • Initializes the RTU controller board • Erases any applications created in SCADAPack Workbench or ISaGRAF 3 Workbench

Startup Mode Actions

Run Mode	Service Mode	Cold Boot Mode	Factory Boot Mode	Action
	X	X	X	DNP node address set to zero (0)
	X			Serial port protocol set to DNP3
		X	X	Serial port settings set to default
		X	X	LED power set to default
		X	X	Database initialized
		X	X	SCADAPack Workbench and ISaGRAF 3 Workbench applications erased
			X	Files erased
			X	Flash file system reformatted
X				SCADAPack Workbench and ISaGRAF 3 Workbench applications started
	X			Settings retained in non-volatile memory
		X	X	SCADAPack Workbench and ISaGRAF 3 Workbench applications in flash erased

Run Mode	Service Mode	Cold Boot Mode	Factory Boot Mode	Action
		X	X	Protocols set to defaults

7.1 Setting the RTU Address for ES Remote I/O Operation

If the SCADAPack 530E or SCADAPack 535E is replacing a SCADAPack ES that was operating as a Main unit for ES Remote I/O units, you need to define the group number and the unit number for the RTU:

- The group number is defined by setting the Remote I/O Group parameter in SCADAPack E Configurator, as described below.
- The unit number is defined by setting the physical hex switch on the RTU. Because the unit number for a Main RTU in an ES Remote I/O configuration is 0, the hex switch should remain at its default setting of 0.

Analog system point 50017 reflects group number.

Analog system point 50002 reflects both the group number and the unit number. For example, if the group number is 2, the hex value for analog system point 50002 will be displayed as 20 on the SCADAPack E Configurator Point Browser property page. This is because the group number is set to 2 and the unit number for a Main RTU in an ES Remote I/O configuration is 0.

The hex value for analog system point 50002 is automatically updated in the RTU database. The updated value is displayed on the SCADAPack E Configurator Point Browser property page the next time you read the point information from the RTU.

To Set the ES Remote I/O Group Number

1. In SCADAPack E Configurator, select **I/O > ES Remote I/O**.
2. On the **ES Remote I/O** property page, set the value of the **Remote I/O Group** parameter in the range 0-14.

   This parameter sets the value of analog system point 50017. The value for analog system point 50017 is retained in non-volatile RAM, but is not saved as part of the RTU configuration. Changes to the **Remote I/O Group** parameter take effect after the RTU is restarted.

⚠WARNING

UNEXPECTED EQUIPMENT OPERATION

Evaluate the operational state of the equipment being monitored or controlled by the RTU before restarting it.

Failure to follow these instructions can result in death or serious injury.

3. Restart the RTU when prompted.
4. In SCADAPack E Configurator, select **Points > Point Browser**.
5. On the **Point Browser** property page, click **Read** to read the updated Hex value for analog system point 50002 and confirm that the first number reflects the correct value for the group number.

For more information about reading and writing system points in the SCADAPack E Configurator Point Browser property page, see the SCADAPack E Configurator User Manual.

7.2 Starting in Run Mode

Run mode is the normal operating mode for the RTU. The RTU automatically starts in Run mode when power is applied or when a board reset occurs. No action is required to select Run mode.

When the RTU starts in Run mode, it loads:

- The defined serial and Ethernet communication parameters for every port.
- The RTU database configuration and point attributes.
- SCADAPack Workbench and ISaGRAF 3 Workbench applications then executes them. If there are no user-created applications in RAM, but there are applications in flash ROM, then the flash ROM program is loaded in RAM and executed.

When the RTU is operating in Run mode, the Run LED on the RTU front cover blinks approximately once every three seconds.

7.3 Starting in Service Mode

Service mode is used for configuration, programming and maintenance work, usually when the communication settings are unknown.

When the RTU starts in Service mode:

- DNP3 node address zero (0) is set, enabling communications with SCADAPack E Configurator at a known DNP address. Connect SCADAPack E Configurator to the USB device port or to a serial communications port.
- Any SCADAPack Workbench and ISaGRAF 3 Workbench applications that are running are stopped.
- Programs and configurations are retained in non-volatile memory.
- Ethernet port parameters are unchanged.
- Serial port parameters are set to the values listed in the table below. Serial1, Serial2 and Serial4 parameters are restored to their default values. Serial3 parameters remain at their pre-Service boot settings.

Service Mode Serial Port Parameters

Serial Port	Serial1 (Port 1)	Serial2 (Port 2)	Serial3 (Port 3)	Serial4 (Port 4)
Function	DNP3	DNP3	Unchanged	Cmd Line
Mode	RS232 (RTS On)	RS232 (RTS On)	Unchanged	RS232
Baud	9600 bps	9600 bps	Unchanged	9600 bps
Data Mode	8-bit No Parity	8-bit No Parity	Unchanged	8-bit No Parity

⚠WARNING

UNEXPECTED EQUIPMENT OPERATION

Evaluate the operational state of the equipment being monitored or controlled by the RTU before removing power.

Failure to follow these instructions can result in death or serious injury.

To Start the RTU in Service Mode

1. Remove power from the RTU.
2. Hold down the **Select** button.
3. Apply power to the RTU.
4. Continue holding the **Select** button down until the **Status** LED turns on.

   To cancel the startup mode selection at this point, remove power from the RTU before you proceed to step 5. This can be a useful tactic to avoid starting up in modes where more actions are applied if you have held the **Select** button down longer than this mode requires.

5. Release the **Select** button.
   If you release the **Select** button before the **Status** LED turns on, the RTU will start in Run mode.

7.4 Starting in Cold Boot Mode

Cold Boot mode is used when you need to clear a configuration from the RTU. It is optional after installing new SCADAPack E controller firmware.

Cold Boot mode does not format the flash file system. Start in Factory Boot mode to do this.

When the RTU starts in Cold Boot mode:

- SCADAPack Workbench and ISaGRAF 3 Workbench applications are erased.
- The RTU points database is cleared.
- RTU configuration settings are returned to default.
- The DNP3 Device Address is set to 0.
- Serial and Ethernet port parameters are restored to the defaults listed in the table below.

Default Serial and Ethernet Port Parameters

Serial Port	Serial1 (Port 1)	Serial2 (Port 2)	Serial3 (Port 3)	Serial4 (Port 4)
Function	ISaGRAF	DNP3	DNP3	Cmd Line
Mode	RS232 (RTS On)	RS232 (RTS On)	RS232	RS232
Baud	9600 bps	9600 bps	9600 bps	9600 bps
Data Mode	8-bit No Parity	8-bit No Parity	8-bit No Parity	8-bit No Parity
Ethernet Port	**Eth1 (Ethernet 1)**	**Eth2 (Ethernet 2)**	**Eth3 (Ethernet 3)**	
Function	TCP/IP+RemIO	TCP/IP+RemIO	TCP/IP+RemIO	
IP Address	0.0.0.0	0.0.0.0	0.0.0.0	
Subnet Mask	0.0.0.0	0.0.0.0	0.0.0.0	

⚠WARNING

UNEXPECTED EQUIPMENT OPERATION

Evaluate the operational state of the equipment being monitored or controlled by the RTU before removing power.

Failure to follow these instructions can result in death or serious injury.

NOTICE

UNEXPECTED EQUIPMENT OPERATION

Starting the RTU in Cold Boot mode returns RTU configuration parameters to their default settings and erases applications created in SCADAPack Workbench and ISaGRAF 3 Workbench. This information must be reloaded into the RTU for correct RTU operation.

Before starting the RTU in Cold Boot mode, save a copy of the RTU configuration information, user-created applications, logs and other data to an external drive so it can be reloaded when the procedure is complete.

Failure to follow these instructions can result in equipment damage.

To Start the RTU in Cold Boot Mode

1. Remove power from the RTU.
2. Hold down the **Select** button.
3. Apply power to the RTU.
4. Continue holding the **Select** button down for 20 seconds until the **Status** LED begins blinking on and off.

   To cancel the startup mode selection at this point, remove power from the RTU before you proceed to step 5. This can be a useful tactic to avoid starting up in modes where more actions are applied if you have held the **Select** button down longer than this mode requires.
5. Release the **Select** button.

   If you release the **Select** button before the **Status** LED begins blinking on and off, the RTU will start in Service mode.
6. Reload the RTU configuration and user-created applications from back-up.

7.5 Starting in Factory Boot Mode

Factory Boot mode is used to reformat the flash file system and initialize the RTU to its factory default settings.

When the controller board starts in Factory Boot mode:

- SCADAPack Workbench and ISaGRAF 3 Workbench applications are erased.
- The RTU points database is cleared.
- RTU configurations are returned to their default settings.
- The flash file system is reformatted.
- Serial and Ethernet port parameters are restored to the defaults listed in the table below.

Default Serial and Ethernet Port Parameters

Serial Port	Serial1 (Port 1)	Serial2 (Port 2)	Serial3 (Port 3)	Serial4 (Port 4)
Function	ISaGRAF	DNP3	DNP3	Cmd Line
Mode	RS232 (RTS On)	RS232 (RTS On)	RS232	RS232
Baud	9600 bps	9600 bps	9600 bps	9600 bps
Data Mode	8-bit No Parity	8-bit No Parity	8-bit No Parity	8-bit No Parity
Ethernet Port	**Eth1 (Ethernet 1)**	**Eth2 (Ethernet 2)**	**Eth3 (Ethernet 3)**	
Function	TCP/IP+RemIO	TCP/IP+RemIO	TCP/IP+RemIO	
IP Address	0.0.0.0	0.0.0.0	0.0.0.0	
Subnet Mask	0.0.0.0	0.0.0.0	0.0.0.0	

⚠WARNING

UNEXPECTED EQUIPMENT OPERATION

Evaluate the operational state of the equipment being monitored or controlled by the RTU before removing power.

Failure to follow these instructions can result in death or serious injury.

NOTICE

UNEXPECTED EQUIPMENT OPERATION

Starting the RTU in Factory Boot mode returns RTU configuration parameters to their default settings and erases applications created in SCADAPack Workbench and ISaGRAF 3 Workbench. This information must be reloaded into the RTU for correct RTU operation.

Before starting the RTU in Factory Boot mode, save a copy of the RTU configuration information, user-created applications, logs and other data to an external drive so it can be reloaded when the procedure is complete.

Failure to follow these instructions can result in equipment damage.

To Start the RTU in Factory Boot Mode

1. Remove power from the RTU.
2. Hold down the **Select** button.
3. Apply power to the RTU.
4. Continue holding the **Select** button down for longer than 30 seconds until the **Status** LED stops blinking on and off and remains lit.

   To cancel the startup mode selection at this point, remove power from the RTU before you proceed to step 5. This can be a useful tactic to avoid starting up in modes where more actions are applied if you have held the **Select** button down longer than this mode requires.
5. Release the **Select** button.

   If you release the **Select** button while the **Status** LED is still blinking, the RTU will start in Cold Boot mode.

   The Factory Boot will take approximately 60 seconds to complete. During this time, the RTU may appear unresponsive while the file system is being formatted. The **Status** LED will remain lit until the Factory Boot has completed and the RTU restarts.
6. Reload the RTU configuration and user-created applications from back-up.

8 Field Wiring

The serial and Ethernet ports on the SCADAPack 530E can be connected to:

- A SCADA master system such as StruxureWare SCADA Expert ClearSCADA
- Other SCADAPack E RTUs
- Devices such as Programmable Logic Controllers (PLCs)
- The SCADAPack E Configurator computer

For information about serial and Ethernet port wiring, see:

- Serial Port Wiring 68
- Ethernet Port Wiring 76

The inputs and outputs on the SCADAPack 530E are connected to the device that you want to monitor or control. In general, inputs are used to monitor devices, while outputs are used to control devices.

For information about input and output wiring see:

- Wiring Screw-Termination Connectors 65
- Digital Input Wiring 79
- Digital Output Wiring 81

8.1 Wiring Screw-Termination Connectors

Screw-termination style connectors are provided to terminate wiring from:

- Power supplies
- RS485 devices
- Input/output (I/O) devices

These 5 mm (0.197 in.) pitch connectors support solid or stranded wires from 3.3 mm^2 to .08 mm^2 (12 AWG to 28 AWG).

⚠WARNING

UNEXPECTED EQUIPMENT OPERATION

Evaluate the operational state of the equipment being monitored or controlled by the RTU or the I/O expansion module before removing power.

Failure to follow these instructions can result in death or serious injury.

NOTICE

UNEXPECTED EQUIPMENT OPERATION

Remove power from the RTU before servicing.

Failure to follow these instructions can result in equipment damage.

To Wire a Connector

1. Use a slotted screwdriver to loosen the termination screw.

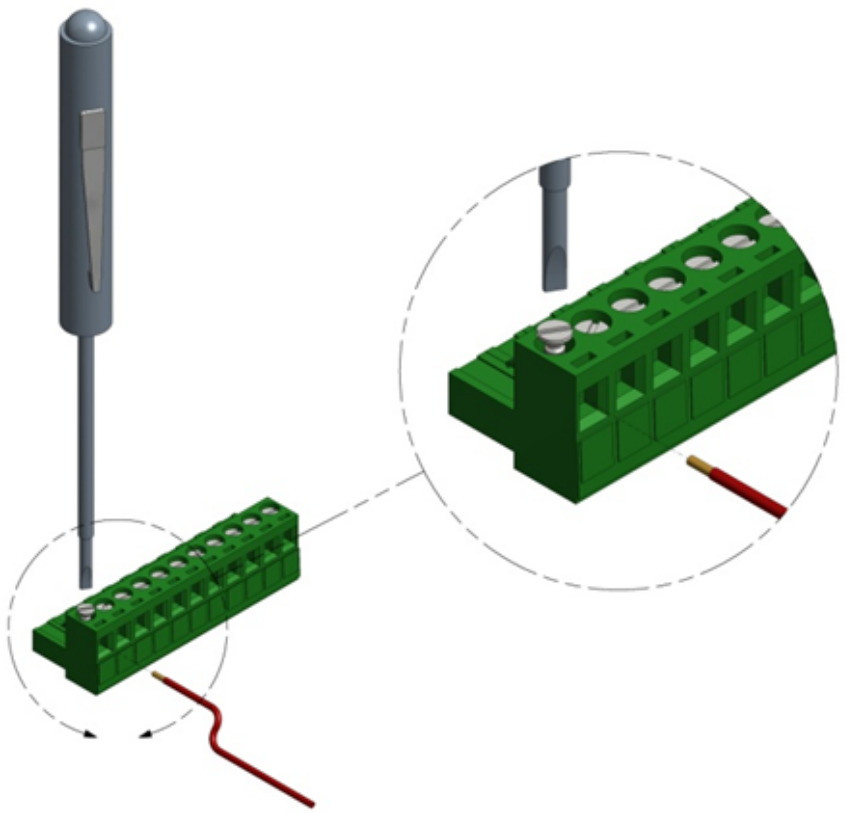

Loosening the Termination Screw

2. Insert the stripped wire into the connector so that the bared wire is located under the screw. As illustrated below, the bared wire should be placed fully within the connector.

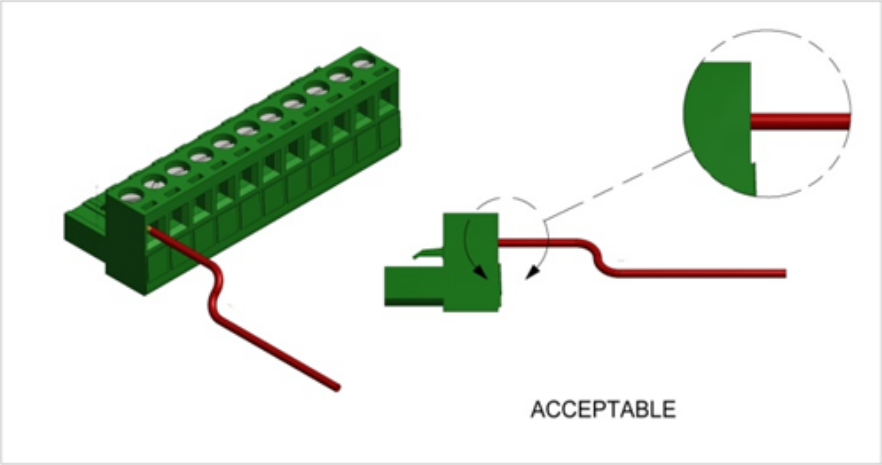

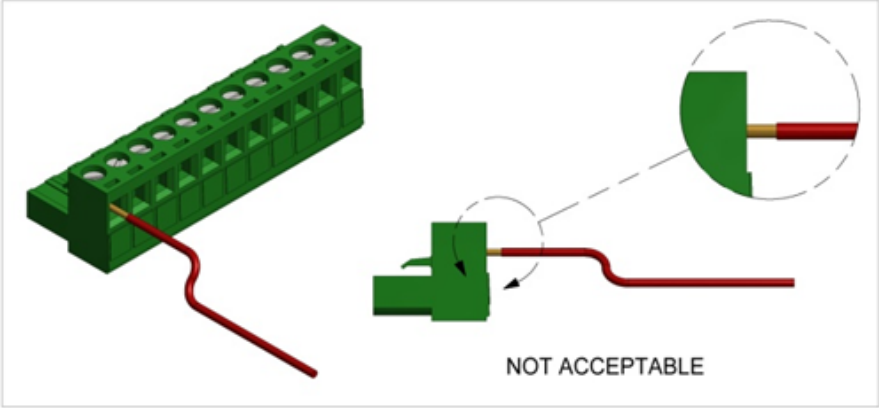

Inserting the Wire into the Connector

3. Apply 0.5 Nm (4.5 lb-in.) torque to tighten the screw so the wire is held firmly in place.

8.2 Serial Port Wiring

The topics in this section describe the wiring for RS232 serial ports and RS485 screw-termination connectors.

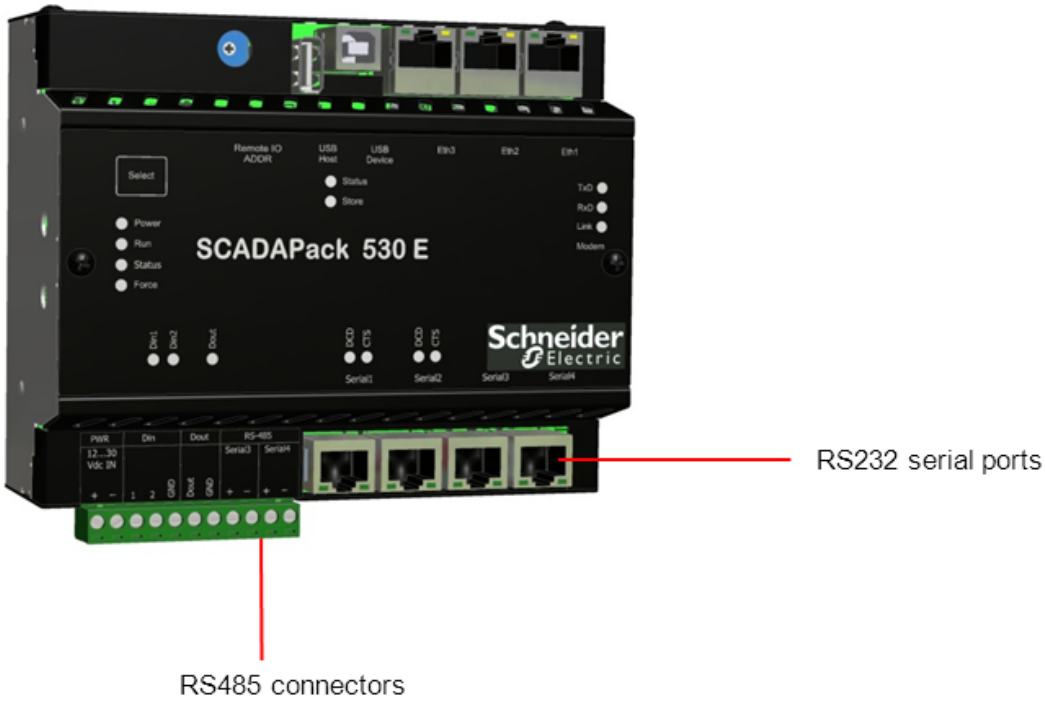

SCADAPack 530E RS232 and RS485 Serial Interfaces

RS232 Serial Port Wiring

- RS232 Pin Assignments and Cable Descriptions 68
- RS232 Wiring Examples 73

RS485 Connector Wiring

- Wiring Screw-Termination Connectors 65
- RS485 Wiring 75

8.2.1 RS232 Pin Assignments and Cable Descriptions

NOTICE
UNEXPECTED EQUIPMENT OPERATION

Serial3 and Serial4 support RS232 or RS485 operation, but not both at the same time. If Serial3 or Serial4 is configured for RS485 operation, the port must remain empty.

- Do not insert an RS232 cable into Serial3 if there is a two-wire RS485 connection to the screw-termination connectors labeled Serial3+ and Serial3-.
- Do not insert an RS232 cable into Serial4 if there is a two-wire RS485 connection to the screw-termination connectors labeled Serial4+ and Serial4-.

Failure to follow these instructions can result in equipment damage.

RS232 Pin Assignments

The serial ports on the RTU support serial cables with eight-pin RJ45 modular connectors. The illustration and tables below show the pin numbers and assignments for the RJ45 connector.

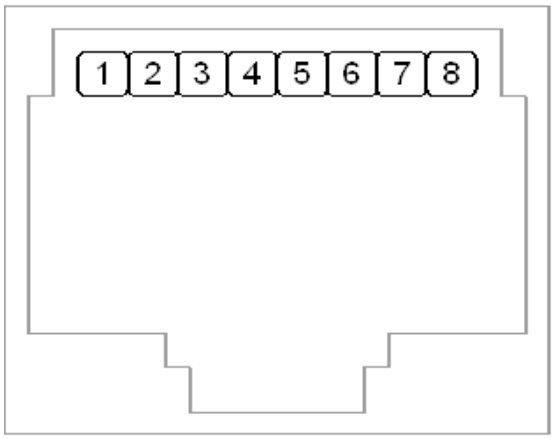

RJ45 Connector Pin Number

RS232 Pin Assignments for Serial1 and Serial2

Pin No.	Pin Function
1	+5V
2	DCD
3	DTR
4	GND
5	RxD
6	TxD
7	CTS
8	RTS

RS232 Pin Assignments for Serial3 and Serial4

Pin No.	Pin Function
1	+5V
2	
3	
4	GND
5	RxD
6	TxD
7	
8	

RS232 Cable Descriptions

The tables below describe the pin functions for the following connections:

- RJ45 to DE-9S Data Terminal Equipment (DTE) for Serial1, Serial2, Serial3 and Serial4
- RJ45 to DE-9P Data Communication Equipment (DCE) for Serial1 and Serial2

RJ45 to DE-9S DTE

This cable is used to connect from any of the four RS232 serial ports on the RTU to a DE-9S connector on a DTE device, such as a PC. A 3 m (10 ft) long cable is available from Schneider Electric using part number TBUM297217.

RJ45 to DE-9S DTE Cable Description

RJ45 8 Pins	RTU DTE Function	DE-9S DTE Function	DE-9S
			Shield connects to shell
6	TxD	RxD	2
5	RxD	TxD	3
4	GND	GND	5
1, 2, 3, 7 and 8 are not connected at this end.			Wires not connected at this end.

RJ45 to DE-9P DCE

This cable is used to connect from the Serial1 or Serial2 RS232 port on the RTU to a DE-9P connector on a DCE device such as a modem. A 38 cm (15 in.) cable is available from Schneider Electric using part number TBUM297218.

RJ45 to DE-9P DCE Cable Description

RJ45	RTU DTE Function	DE-9P DCE Function	DE-9P
			Shield connects to shell
3	DTR	DTR	4
6	TxD	TxD	3
5	RxD	RxD	2
2	DCD	DCD	1
4	GND	GND	5
7	CTS	CTS	8
8	RTS	RTS	7

RJ45	RTU DTE Function	DE-9P DCE Function	DE-9P
1	+5V	+5V	9

8.2.2 RS232 Wiring Examples

The illustrations in this topic show different wiring options for the RS232 serial ports. The wiring options you can use depend on the serial port signaling capabilities:

- Serial1 and Serial2: TxD, RxD, CTS, RTS, DCD, DTR
- Serial3 and Serial4: TxD, RxD

⚠WARNING

HAZARD OF ELECTRIC SHOCK

Remove power from all devices before connecting or disconnecting inputs or outputs to any terminal or installing or removing any hardware.

Failure to follow these instructions can result in death or serious injury.

DTE to DTE without Handshaking

This wiring option can be used with any of the four RS232 serial ports.

There are several methods for wiring an RS232 serial port to Data Terminal Equipment (DTE) and Data Communications Equipment (DCE) devices. The simplest connection requires only three wires: RxD, TxD and signal ground. The following diagram shows the wiring between two DTE devices when handshaking is not required.

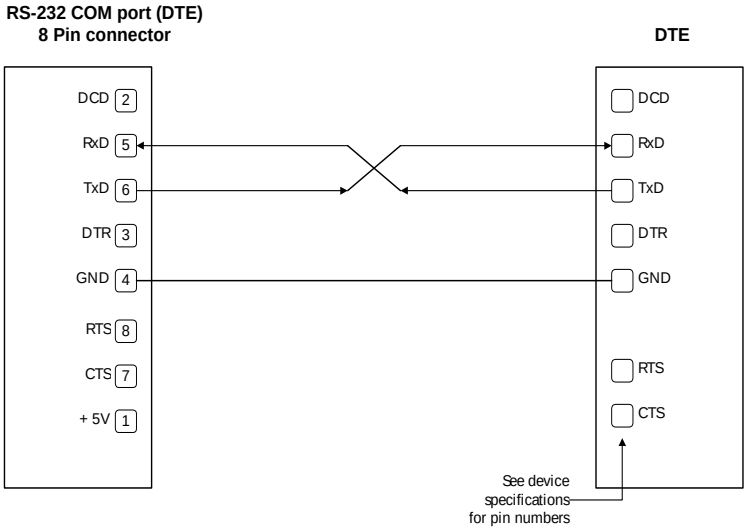

RS232 DTE to RS232 DTE without Handshaking

DTE to DTE with Handshaking

This wiring option can be used with Serial1 and Serial2 RS232 ports.

Some DTE devices may require hardware handshaking lines. The CTS and RTS lines are commonly used for handshaking. The DTR and DCD lines are less commonly used. The RTU does not require these lines. Refer to the specifications for the external device for exact requirements. The following diagram shows the wiring between two DTE devices when handshaking is required.

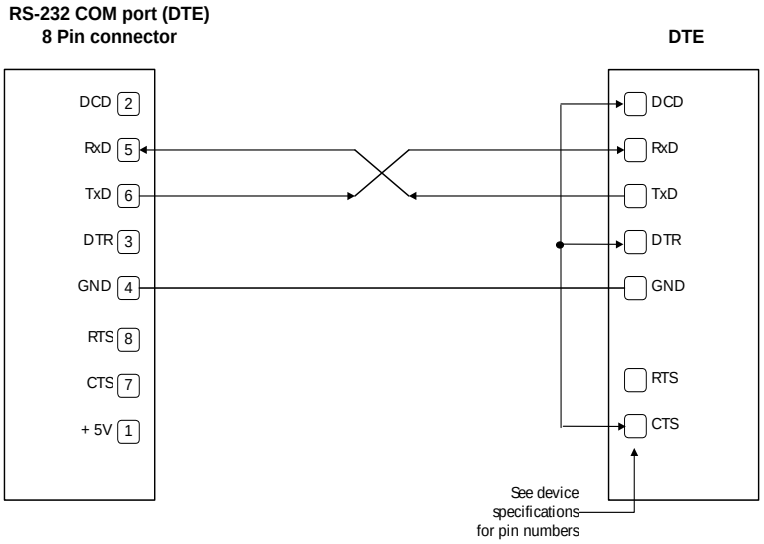

RS232 DTE to RS232 DTE with Handshaking

DTE to DCE with Handshaking

This wiring option can be used with Serial1 and Serial2 RS232 ports.

DCE devices require different wiring. The handshaking lines need to be connected. Many DCE devices are half-duplex. Select half-duplex operation with these devices. The diagram below shows the wiring between a DTE device and a DCE device with handshaking.

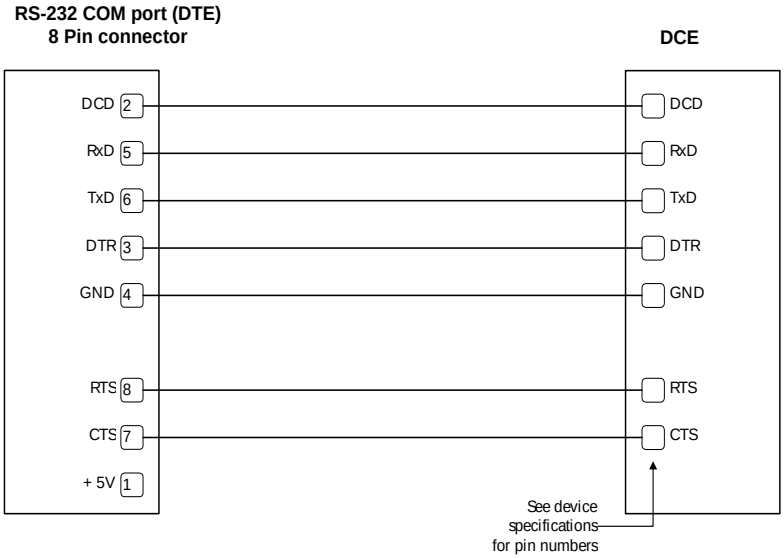

RS232 DTE to RS232 DCE with Handshaking

8.2.3 RS485 Wiring

⚠WARNING

HAZARD OF ELECTRIC SHOCK

Remove power from all devices before connecting or disconnecting inputs or outputs to any terminal or installing or removing any hardware.

Failure to follow these instructions can result in death or serious injury.

NOTICE

UNEXPECTED EQUIPMENT OPERATION

Serial3 and Serial4 support RS232 or RS485 operation, but not both at the same time. If Serial3 or Serial4 is configured for RS485 operation, the port must remain empty.

- Do not insert an RS232 cable into Serial3 if there is a two-wire RS485 connection to the screw-termination connectors labeled Serial3+ and Serial3-.
- Do not insert an RS232 cable into Serial4 if there is a two-wire RS485 connection to the screw-termination connectors labeled Serial4+ and Serial4-.

Failure to follow these instructions can result in equipment damage.

The Serial3 and Serial4 RS485 screw-termination connectors support solid or stranded wires from 3.3 mm^2 to .08 mm^2 (12 AWG to 28 AWG). The table below describes the polarity assignment for these connectors.

Connector Name	Polarity Assignment
Serial3 +	Positive
Serial3 -	Negative
Serial4 +	Positive
Serial4 -	Negative

Either of the terminal connections labeled GND (ground) can be used with RS485 screw-termination connections.

For instructions on inserting wires into the RS485 connectors, see Wiring Screw-Termination Connectors 65.

8.3 Ethernet Port Wiring

The topic in this section describes the wiring for the Ethernet ports on the RTU.

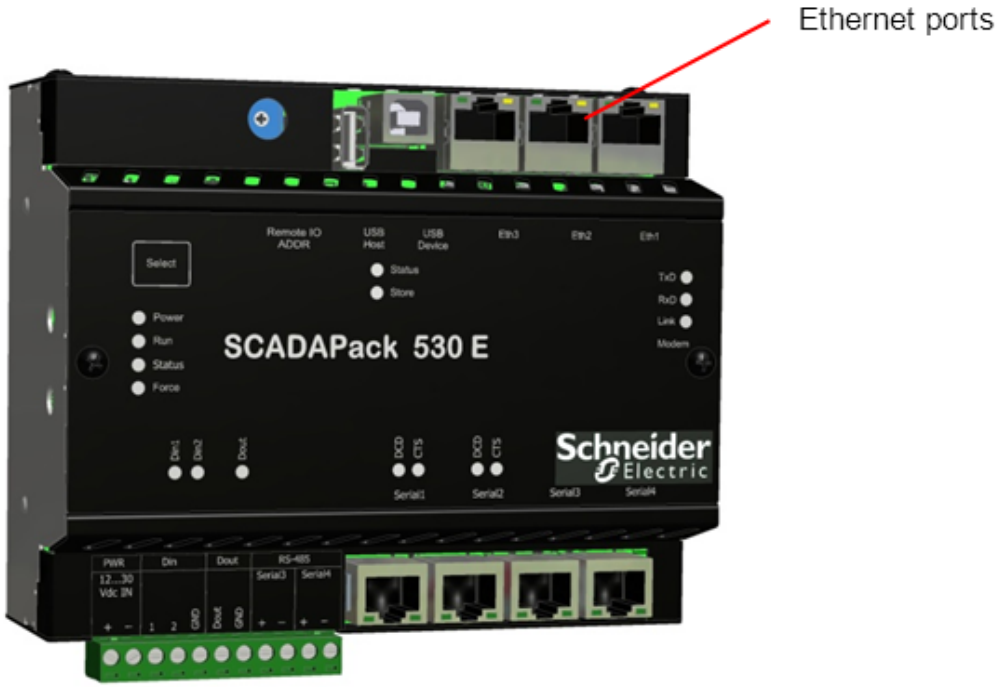

SCADAPack 530E Ethernet Ports

- Ethernet Pin Assignments and Cable Description 76

8.3.1 Ethernet Pin Assignments and Cable Description

Ethernet Pin Assignments

The Ethernet ports on the RTU can be connected to an Ethernet wall jack or hub using standard RJ45 Category 5 patch cables. The illustration and table below show the pin assignments for the RJ45 modular connector.

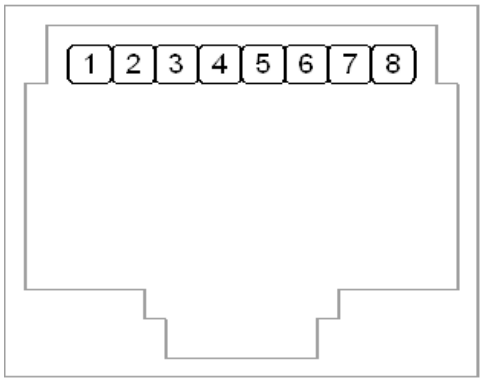

RJ45 Connector Pin Number

Ethernet Pin Assignments

Pin No.	Pin Function
1	+Tx
2	-Tx
3	+Rx
4	
5	
6	-Rx
7	
8	

Ethernet Cable Description

Ethernet cables are used in 10/100 BASE-T LANs. These networks are also known as unshielded twisted pair (UTP), copper wire, Category 3, 4 and 5 Ethernet wire or twisted pair.

NOTICE

UNEXPECTED EQUIPMENT OPERATION

The IEEE 802.3 10 BASE-T specification requires that 10 BASE-T and 100 BASE-T devices support UTP 100-120 unshielded twisted pair cables of not less than 100 m (328 ft) in length.

This requirement does not factor in losses due to connectors, patch panels, punch-down blocks, or other cable management hardware, which introduce additional loss.

For each connector or other intrusive cable management device in the total link, subtract 12 m (39 ft) from the total allowable link length.

Failure to follow these instructions can result in equipment damage.

As long as specifications are met for the entire length of the cable, UTP cable segments can be run up to a maximum allowable length of 200 m (656 ft).

The Ethernet ports on the RTU automatically configure themselves for Medium Dependent Interface (MDI) or MDI-X. This means that either a crossover or a straight-through Ethernet cable can be used. The RTU will automatically detect the interface used and serve the cable appropriately.

8.4 Digital Input Wiring

The topic in this section describes the wiring for the digital inputs on the RTU.

SCADAPack 530E Digital Inputs

- Digital Input Wiring Example 79

8.4.1 Digital Input Wiring Example

NOTICE
UNEXPECTED EQUIPMENT OPERATION When wiring digital inputs: • Confirm that the connection to the digital input does not exceed the ratings for the digital input. See the specifications 111 section for details.

- Confirm that the polarity of the connection is correct with the two positive terminals wired together and the two negative terminals wired together.

Failure to follow these instructions can result in equipment damage.

The figure below shows a connection from Din 2 and a ground connector to a power supply or battery.

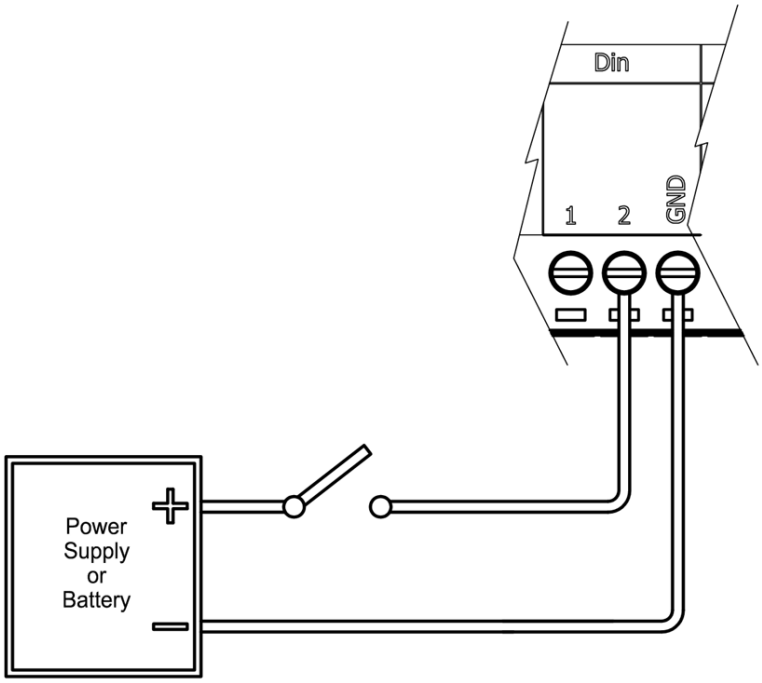

Controller Board Digital Input Wiring Example

8.5 Digital Output Wiring

The topics in this section describe the wiring for the digital output on the RTU.

SCADAPack 530E Digital Output

- Digital Output Wiring Example 81
- Controlling Grounded Devices with the Controller Board Digital Output 82

8.5.1 Digital Output Wiring Example

NOTICE
UNEXPECTED EQUIPMENT OPERATION Incandescent lamps and other loads may have inrush currents that will exceed the rated maximum current of the relay contacts. This inrush current may damage the relay contacts. Interposing relays need to be used in these situations. **Failure to follow these instructions can result in equipment damage.**

NOTICE
UNEXPECTED EQUIPMENT OPERATION External lightning protection is required if the device being controlled is outside the physical area (cubicle or building) in which the RTU is located.

Failure to follow these instructions can result in equipment damage.

NOTICE

UNEXPECTED EQUIPMENT OPERATION

When controlling inductive loads, the relay contacts on digital outputs must be protected. The energy stored in the coil can generate significant electrical noise when the relay contacts are opened.

To suppress the noise in DC circuits, place a diode across the coil.

To suppress the noise in AC circuits, place a metal-oxide varistor (MOV) across the coil.

Failure to follow these instructions can result in equipment damage.

The figure below shows a wiring example for the controller board digital output which provides an open drain metal-oxide semiconductor field-effect transistor (MOSFET) for controlling loads such as relays or lamps. See the specifications 111 for details about the power rating for this digital output.

For information about controlling devices with this digital output, see Controlling Devices with the Controller Board Digital Output 82.

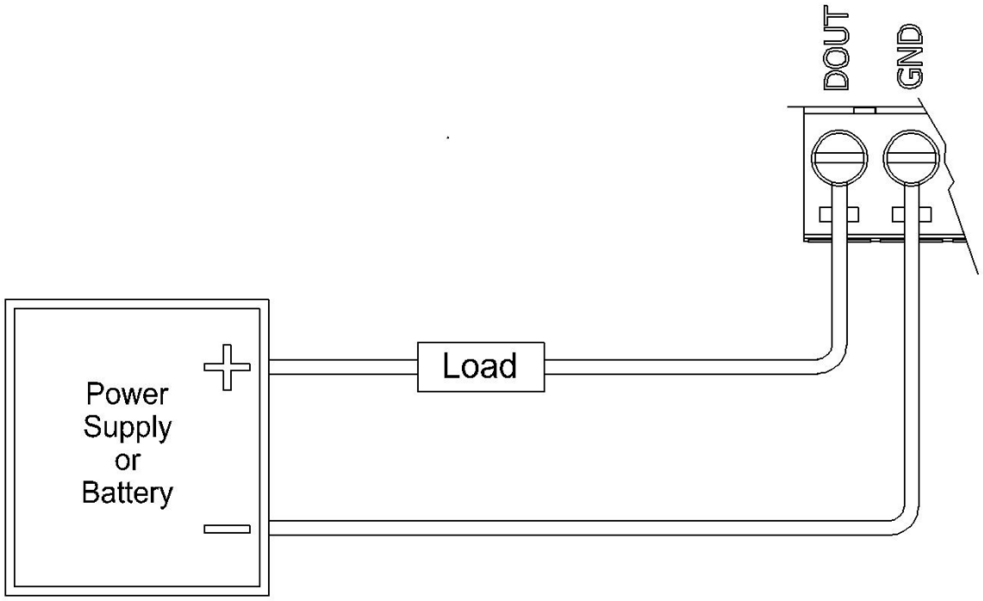

Wiring Examples for the Controller Board Digital Output

8.5.2 Controlling Devices with the Controller Board Digital Output

NOTICE

UNEXPECTED EQUIPMENT OPERATION

Incandescent lamps and other loads may have inrush currents that will exceed the rated maximum current of the relay contacts. This inrush current may damage the relay contacts. Interposing relays need to be used in these situations.

Failure to follow these instructions can result in equipment damage.

NOTICE

UNEXPECTED EQUIPMENT OPERATION

External lightning protection is required if the device being controlled is outside the physical area (cubicle or building) in which the RTU is located.

Failure to follow these instructions can result in equipment damage.

NOTICE

UNEXPECTED EQUIPMENT OPERATION

When controlling inductive loads, the relay contacts on digital outputs must be protected. The energy stored in the coil can generate significant electrical noise when the relay contacts are opened.

To suppress the noise in DC circuits, place a diode across the coil.

To suppress the noise in AC circuits, place a metal-oxide varistor (MOV) across the coil.

Failure to follow these instructions can result in equipment damage.

The single digital output on the controller board does not include an internal relay. As a result, this digital output needs an external interposing relay to control devices.

Add the external interposing relay between the digital output and the device that you want to control. The example below shows the wiring needed to control a grounded device, such as a radio.

See the specifications 111 for details about the power rating for this digital output.

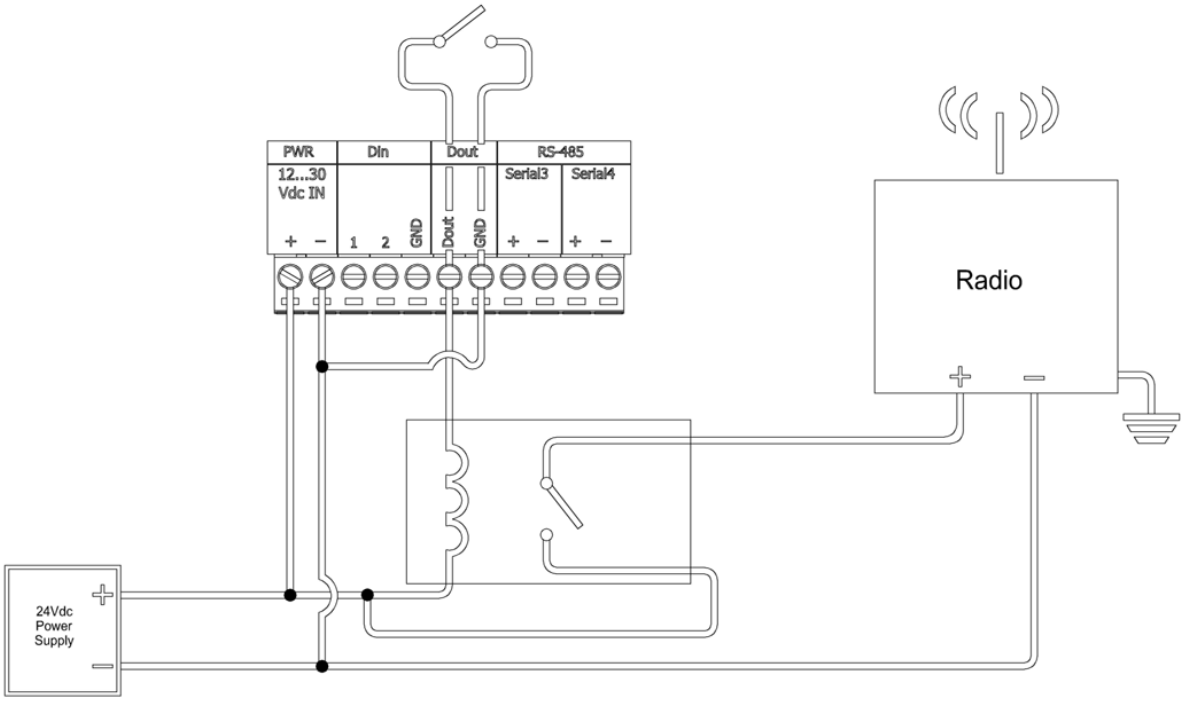

Positioning of External Interposing Relay

9 Configuration

The RTU can be configured:

- Locally or remotely using SCADAPack E Configurator 85, a software application that runs on a desktop or laptop computer.
- Remotely as part of an end-to-end SCADA system using the StruxureWare SCADA Expert ClearSCADA software.
- Locally using applications created in SCADAPack Workbench or ISaGRAF 3 Workbench. 88

Before you begin configuring the RTU, determine whether the SCADA Expert ClearSCADA software will be used for any configuration tasks. This documentation assumes you are using the SCADAPack E Configurator software to configure the RTU. For information about using the ClearSCADA software, see the ClearSCADA documentation.

9.1 SCADAPack E Configurator

The SCADAPack E Configurator software provides a graphical user interface that allows you to configure the RTU settings and to load those settings into the RTU. It also integrates with SCADAPack Workbench and ISaGRAF 3 Workbench so you can build and diagnose IEC 61131-3 sequences that extend the RTU capabilities.

If you begin RTU configuration in the SCADAPack E Configurator software, you cannot switch to the StruxureWare SCADA Expert ClearSCADA software. Similarly, if you begin RTU configuration in the SCADA Expert ClearSCADA software, you cannot switch to the SCADAPack E Configurator software.

The following table summarizes where in the SCADAPack E Configurator software you will find the configurable attributes for each hardware element on the SCADAPack 530E and SCADAPack 535E.

Configuration Parameters in SCADAPack E Configurator

Hardware Label	SCADAPack E Configurator Folder	SCADAPack E Configurator Property Page(s)	SCADAPack E Configurator Label
Serial1 Serial2 Serial3 Serial4	Ports	Ports 0-4	Port 1 Port 2 Port 3 Port 4
Eth1 Eth2 Eth3	TCP/IP	TCP/IP	Ethernet 1 Ethernet 2 Ethernet 3
USB Device	Ports	Ports 0-4	Port 0

DI DO AI[1] AO[1]	Points	Binary Points Counter Points[1] Analog Points[1]	Binary Points Counter Points[1] Analog Points[1]

[1] The SCADAPack 530E does not provide counter inputs, analog inputs or analog outputs. Add the 6601 I/O expansion module if you need these input or output types.

The figure below illustrates the Ports 0-4 property page for the SCADAPack 530E and SCADAPack 535E and shows the location of the other property pages listed in the table. For details about using SCADAPack E Configurator, refer to the SCADAPack E Configurator User Manual.

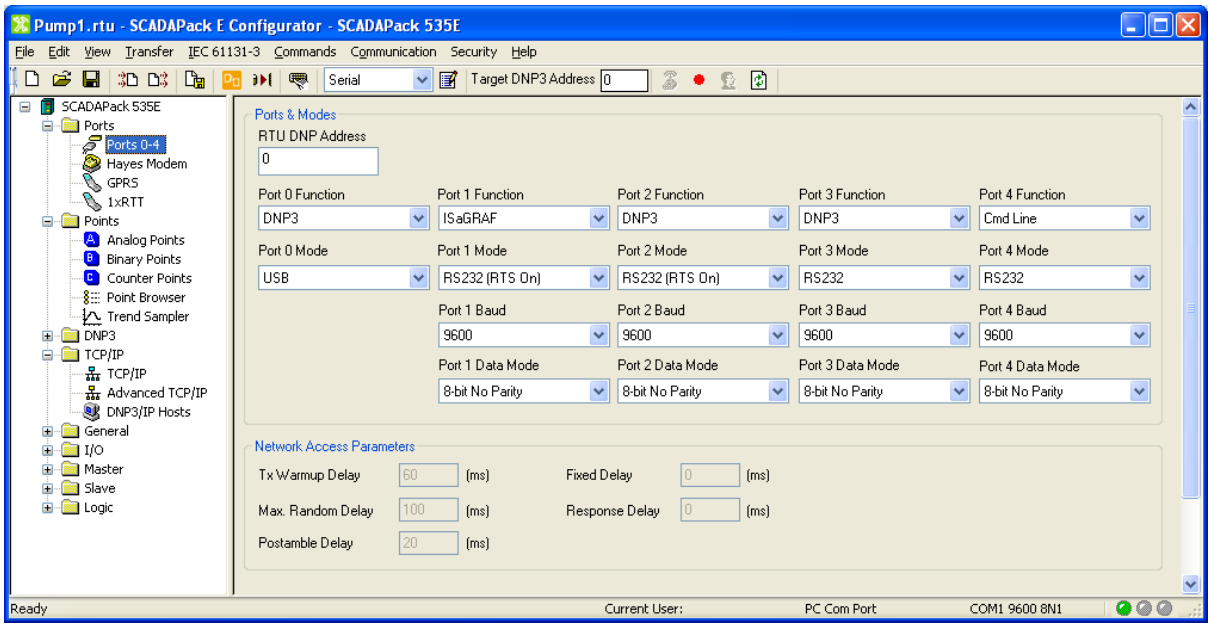

SCADAPack E Configurator User Interface

9.2 Reading and Writing Data With Logic Programs

IEC 61131-3 applications use I/O connections to the SCADAPack E RTU point database to access physical I/O points and derived data.

Reading and Writing Digital I/O Data

SCADAPack Workbench applications can read digital data, including digital input/output points:

- Use SCADAPack Workbench RTU_BIN_READ I/O devices to read digital input points.
- Use SCADAPack Workbench RTU_BIN_READ_OUTPUT I/O devices for reading digital output point states.

To write digital data, including digital output points, use SCADAPack Workbench RTU_BIN_WRITE I/O devices.

To read or write data to the digital inputs or outputs in ISaGRAF 3 Workbench applications, use rtuxxdi, rtuxxdo or rtuxxdos I/O boards.

More Information

Refer to the SCADAPack E Target 5 Technical Reference Manuals, ISaGRAF 3 Technical Manuals, or the SCADAPack E Configurator User Manual for information about how to assign RTU points.

10 Diagnostics

The RTU provides a number of capabilities that can help you monitor RTU operations and perform troubleshooting tasks. They include:

- LEDs that indicate the status of RTU ports and communications
- Diagnostics for several aspects of RTU communications and exceptional RTU operating conditions
- System points that measure internal RTU temperature and provide power supply and battery status
- System points that provide communications status information
- Status codes that provide information about system, communication and device status

The following topics provide an overview of the diagnostics capabilities on the RTU:

- Status Codes 99

10.1 LEDs

The front panel for the SCADAPack 530E and SCADAPack 535E provides 16 LEDs to indicate hardware status. The figure below shows the RTU front panel LEDs.

SCADAPack 530E and SCADAPack 535E Front Panel LEDs

In addition to the front panel LEDs, the serial and Ethernet ports and the digital inputs and outputs on the RTU include LEDs to indicate status. The following table describes the LEDs on the SCADAPack 530E and SCADAPack 535E.

SCADAPack 530E and SCADAPack 535E LED Descriptions

Type	Name or Location	Color	Description
General	Power	Green	Lit when correct voltage is applied to the power terminals. Does not indicate whether the CPU is running.
	Run	Green	Blinks when the CPU is running.
	Status	Red	Blinks to indicate a new status code has been generated. To view the status code and its description, go to the **General > Controller Status** property page in the SCADAPack E Configurator software. The status code is also available through analog system point 50020.

	Force	Red	Lit when an I/O point is being forced into a state that does not represent its actual state. This typically occurs during debugging exercises or when a SCADAPack Workbench or ISaGRAF 3 Workbench application locks the I/O point for its own use.
Input and Output	Digital input	Green	Lit when the digital input is active. Blinks when pulses are applied if the digital input is configured to be a counter (SCADAPack 535E only).
	Digital output	Green	Lit when the digital output is active.
USB Host	Status	Green	This LED is under the control of Binary System Point 50753. It can be controlled by a SCADAPack Workbench or ISaGRAF 3 Workbench application or through protocol control commands.
	Store	Green	Blinks when automatic loading of security files from the USB mass storage device into the RTU is successfully completed.
Eth1, Eth2, Eth3	Left side of the physical port	Green	Activity LED. Lit when the Ethernet port is active. Blinks when the port is transmitting or receiving data.
	Right side of the physical port	Yellow	Link LED. Lit when 10/100 Ethernet link is active.
Modem[1]	TxD	Green	Lit when the (optional) cellular modem is transmitting data.
	RxD	Green	Lit when the (optional) cellular modem is receiving data.
	Link	Green	Lit when the (optional) cellular modem has an active network connection.
Serial1 and Serial2	CTS	Green	Lit when the CTS input is active on the port.
	DCD	Green	Lit when the DCD input is active on this serial port.
	Left side of the physical port	Green	Blinks when the port is transmitting data over the RS232 serial connection.
	Right side of the physical port	Green	Blinks when the port is receiving data over the RS232 serial connection.
Serial3 and Serial4	Left side of the physical port	Green	Blinks when data is being transmitted over the RS232 or RS485 serial connection.

			If the port is configured for RS485, the LEDs on the empty port indicate that data is being transmitted over the wired RS485 connection.
	Right side of the physical port	Green	Blinks when data is being received over the RS232 or RS485 serial connection. If the port is configured for RS485, the LEDs on the empty port indicate that data is being received over the wired RS485 connection.

1 The cellular modem is expected to be available in a future release.

10.2 Accessing Diagnostics

The RTU provides diagnostics for several aspects of RTU communications and exceptional operating conditions. The following operational diagnostics are specifically supported:

- DNP3 diagnostics at each protocol layer, including network routing.
- TCP/IP diagnostics including DNP3 over IP, IP servers and TCP service ports.
- PLC communication diagnostics including protocol packet displays, communication status and device status for serial and network PLC services.
- RTU system diagnostics.

The operational information provided during a diagnostic display session can assist in troubleshooting. To sort these diagnostics from normal operational messages, it may be advantageous to disable DNP, TCP/IP, PLC and system diagnostics using the DNPDIAG, TCPDIAG, PLCDIAG and SYSDIAG commands from the command line. Other RTU diagnostics use the following format to assist in identifying messages from various RTU tasks:

Task-name>>diagnostic text

To Access Diagnostics

Use a command line in a diagnostic display session to query the RTU's operational status. The commands available are detailed in the SCADAPack E Operational Reference Manual.

There are three main ways to access command line diagnostics:

- Using an ASCII terminal connected to any RTU serial port configured for the **Cmd Line** function. This is the method used to display startup diagnostics. For details, see Startup Diagnostics 95. To access a diagnostic display session, use the **DIAG** command as described in the SCADAPack E Operational Reference manual.
- Using an ASCII terminal connected to any RTU serial port configured for the **ISaGRAF** function. Enable the SCADAPack Workbench or ISaGRAF 3 Workbench functionality to enter command line mode through an ISaGRAF port. To access the command line, press the **Enter** key three times. To return to SCADAPack Workbench or ISaGRAF 3 Workbench debugging mode, type the **BYE** command.

NOTICE
UNEXPECTED EQUIPMENT OPERATION The BYE command should be issued prior to disconnecting the ASCII terminal for correct SCADAPack Workbench or ISaGRAF 3 Workbench operation. **Failure to follow these instructions can result in equipment damage.**

- Using Telnet over TCP/IP links. Multiple Telnet sessions may be established with the RTU on the same TCP/IP interface, or multiple sessions may be simultaneously established on multiple TCP/IP interfaces.

Where a direct serial connection or Telnet is not available, diagnostics can be directed to an RTU file. This is achieved using the **FILEDIAG** command described in the SCADAPack E Operational Reference Manual. This diagnostics log file can then be retrieved for analysis using DNP3 file transfer.

You can also use the **Transfer > Remote Command Line** menu option in SCADAPack E Configurator to access the command line interface for remote SCADAPack ES units through a virtual terminal window over DNP3 links. The RTU does not need to be configured with a **Cmd Line** or **ISaGRAF** port to access this functionality.

10.3 Startup Diagnostics

At startup, the RTU displays information about its startup sequence and configuration in ASCII text format through any port configured for the **Cmd Line** function. By default, Serial4 (Port 4) on the RTU is configured for the **Cmd Line** function.

Once startup is complete, the RTU terminates the diagnostic session and enters command mode unless you have configured the RTU to remain in the diagnostic display session. Use the SYSDIAG **OVERRIDE** command described in the SCADAPack E Operational Reference Manual to configure the RTU to remain in the diagnostic display session when startup is complete.

To access command line mode from a diagnostic display session, press the **Esc** (Escape) key on your keyboard.

10.4 Internal Temperature Reading

Analog system points are used to measure RTU input supply voltage and the ambient temperature of the RTU controller board. Use the SCADAPack E Configurator software to add the system points you want to measure to the RTU points database.

Once defined, system points can be accessed directly from a user application program or through remote RTU communications.

Internal Temperature ^{o}C

Analog System Point 50062

This analog system point measures the ambient temperature at the controller board in degrees Celsius. It is useful for measuring the operating environment of the controller board and returns an integer value in the range –40°C to 75°C. Temperatures outside this range cannot be measured.

- Use the system point directly by defining an analog system point with the point number 50062 in the RTU points database.
- Read the system point into a user-created SCADAPack Workbench or ISaGRAF 3 Workbench application as an Integer or Real variable from an input board connection.

Internal Temperature ^{o}F

Analog System Point 50063

This analog system point measures the ambient temperature at the controller board in degrees Fahrenheit. It is useful for measuring the operating environment of the controller board and returns an integer value in the range –40°F to 167°F. Temperatures outside this range cannot be measured.

- Use the system point directly by assigning an analog system point with the point number 50063 in the RTU points database
- Read the system point into a user-created SCADAPack Workbench or ISaGRAF 3 Workbench application as an Integer or Real variable from an input board.

10.5 Power Supply and Battery Status

Internal binary system points are used to indicate the status of the RTU power supply and the onboard back-up RAM battery. These can be accessed from a user-created application or through remote RTU communications.

Use the SCADAPack E Configurator software to add the system points you want to measure to the RTU points database.

Local Input Power Supply Low

Binary System Point 50206

An internal binary point indicates the condition of the input power supply. It compares the Supply Voltage System Analog Point 50060 with the low voltage notification level set in SCADAPack E Configurator **General>Controller Settings** property page. If the input power supply is lower than the low voltage notification level then this Binary System Point is activated.

- Use the system point directly by assigning a binary point to this point number (50206) in the RTU database.
- For SCADAPack Workbench and ISaGRAF 3 Workbench applications, read the status point through an input board connection.

Local On Board Battery Low

Binary System Point 50207

An internal binary point indicates the condition of a monitor on the lithium battery that maintains the non-volatile RAM in the controller. If active, the point indicates that the onboard controller battery needs replacement.

- Use the system point directly by assigning a binary point to this point number (50207) in the RTU database.
- For SCADAPack Workbench and ISaGRAF 3 Workbench applications, read the status point through an input board connection.

10.6 Communication Statistics

The RTU provides three types of communication statistics through analog system points:

- SCADAPack E (global) communication statistics
- Port communication statistics
- TCP/IP communication statistics

The analog system points for communication statistics can be read from the RTU using specific DNP3 point range read requests. Alternatively, they can be read into a SCADAPack Workbench or ISaGRAF 3 Workbench user-created application through input boards or function blocks.

Communication statistics point values can be reset at any time by controlling the relevant system point value and setting it to 0. This may be done by a SCADAPack Workbench or ISaGRAF 3 Workbench application or through DNP3 point controls.

The communication statistics analog system points cannot be directly added to the RTU points database and returned in DNP3 Class data polls. To map communication statistics points to a SCADA master, the values can be imported into a SCADAPack Workbench or ISaGRAF 3 Workbench application, manipulated if required, then exported to a derived point, which can be configured for access by a SCADA master.

Communication statistics analog system points can be accessed as 16-bit or 32-bit analog input points. For details, see the SCADAPack E Operational Reference Manual.

10.7 Status Codes

This section describes the following RTU status codes

- System Status Codes 100
- Communication and Device Status Codes 102

10.7.1 System Status Codes

SCADAPack E RTUs provide system status codes through analog system points. The latest status is retained as the value of the system status. DNP3 event reporting may be configured for the system status point to provide a time-stamped history of status codes.

User-defined status codes may be generated through SCADAPack Workbench or ISaGRAF 3 Workbench using the **RTUPARAM** function block with the **SYS_ERR_CODE** parameter.

The status of SCADAPack Workbench and ISaGRAF 3 Workbench applications are reported:

- To the SCADAPack Workbench or ISaGRAF 3 Workbench Debugger if connected locally or remotely
- Through the SCADAPack E System Error Point
- Through a SCADAPack E diagnostic display session

SCADAPack E System Status Codes

Status Code	Name	Description
0	Normal	Normal status on the RTU.
1-100	ISaGRAF Target Status	See the SCADAPack E ISaGRAF Technical Reference Manual and the SCADAPack E Target 5 Technical Reference Manual.
100-999	User Defined Status	For SCADAPack Workbench, see the **RTUPARAM** function block in the SCADAPack E Target 5 Function Block Reference Manual. For ISaGRAF 3 Workbench, see the **RTUPARAM** function block in the ISaGRAF Function Blocks Reference Manual.
1001-1009	ISaGRAF Application Load Status	Did not load SCADAPack Workbench or ISaGRAF 3 Workbench application files or memory application for targets.
1010-1019	Configuration Status	Configuration file status codes.
1020-1029	Profile Status	Profile configuration status codes.
1030-1039	Event & Trend Status	Event storage threshold status codes.
1040-1049	Data Processing Status	Run-time data processing status codes.
1050-1059	Remote I/O Status	Firmware mismatch status codes.
1400-1401	Mounting Status	Root folder mounting status codes.
2000-2999	TCP/IP Status	TCP/IP configuration and run-time status. See the SCADAPack E TCP/IP Technical Reference Manual for details.
3000-3099	Extended Status	Additional configuration file and firmware update status codes.

For details about SCADAPack E system status codes, see the SCADAPack E Operational Reference Manual.

10.7.2 Communication and Device Status Codes

DNP3 Communication Status

DNP3 communication status is reported by the RTU through a diagnostic display session as DNP3 driver diagnostic information. These status codes are also reported through the SCADAPack Workbench or ISaGRAF Workbench Peer Communication function blocks in the output **STATUS** variable.

DNP3 communication status is not reported through the RTU System Error Point.

See the SCADAPack E DNP3 Technical Reference Manual for a complete list of DNP3 communication status codes.

TCP/IP Status

TCP/IP communication and configuration status is reported by the RTU through a diagnostic display session as TCP/IP diagnostic information. These status codes are also reported through the SCADAPack Workbench or ISaGRAF Workbench TCP/IP function blocks in the output **STATUS** variable.

TCP/IP status is reported through the RTU System Error Point for incorrect TCP/IP configuration.

See the SCADAPack E TCP/IP Technical Reference Manual for a complete list of TCP/IP communication status codes.

PLC Device Communication Status

Status codes from PLC device drivers on the RTU are reported through analog system points. These analog system points represent the status of communications between a SCADAPack Workbench or ISaGRAF Workbench PLC device I/O board and a PLC device.

PLC device communication status is not reported through the SCADAPack E System Error Point.

PLC device communication status codes are detailed in the following manuals:

SCADAPack E ISaGRAF Technical Reference Manual

SCADAPack E Target 5 Technical Reference Manual

SCADAPack E Modbus Communication Interfaces Manual

11 Maintenance

The following topics describe the recommended maintenance activities for the RTU:

11.1 Calibration

The RTU is electronically calibrated at the factory during the manufacturing process and after any repair procedures.

There are no user calibration procedures.

11.2 Preventive Maintenance

Keep circuit boards free from contaminants such as dust and moisture.

⚠WARNING

UNEXPECTED EQUIPMENT OPERATION

Evaluate the operational state of the equipment being monitored or controlled by the RTU or the I/O expansion module before removing power.

Failure to follow these instructions can result in death or serious injury.

⚠WARNING

HAZARD OF ELECTRIC SHOCK

Remove power from the RTU before removing the RTU cover.

Remove power from the RTU before servicing.

Failure to follow these instructions can result in death or serious injury.

Battery Handling Procedures

NOTICE

UNEXPECTED EQUIPMENT OPERATION

- Treat batteries with care.
- Follow the manufacturers' instructions concerning battery storage, use and disposal.
- Keep batteries clean and free from contaminants or other materials that could short the terminals.
- Connect new batteries using the correct polarity.
- Replace batteries with new units of the same chemistry, capacity and make.
- Observe the manufacturers' instructions regarding disposal of batteries. Considerable energy remains in the battery.

Failure to follow these instructions can result in equipment damage.

Electrostatic Discharge (ESD) Procedures

NOTICE
UNEXPECTED EQUIPMENT OPERATION The electronics inside the RTU can be damaged by static electricity. If you need to remove the RTU cover, wear an anti-static wrist strap that is connected to ground. Failing to follow this simple step can cause intermittent or total loss of RTU operation and will void the warranty. **Failure to follow these instructions can result in equipment damage.**

11.3 Routine Maintenance

⚠WARNING

UNEXPECTED EQUIPMENT OPERATION

Evaluate the operational state of the equipment being monitored or controlled by the RTU or the I/O expansion module before removing power.

Failure to follow these instructions can result in death or serious injury.

⚠WARNING

HAZARD OF ELECTRIC SHOCK

Remove power from the RTU before removing the RTU cover.

Remove power from the RTU before servicing.

Failure to follow these instructions can result in death or serious injury.

NOTICE

UNEXPECTED EQUIPMENT OPERATION

The electronics inside the RTU can be damaged by static electricity. If you need to remove the RTU cover, wear an anti-static wrist strap that is connected to ground. Failing to follow this simple step can cause intermittent or total loss of RTU operation and will void the warranty.

Failure to follow these instructions can result in equipment damage.

Primary Power Supply

The primary power for the RTU is a DC power supply. If this is a mains-operated power supply charger with battery backup, replace the batteries every 36 months or earlier if necessary.

Real-Time Clock and Onboard RAM Back-up Battery

The RTU includes a lithium-powered back-up battery on the controller board. The main task of the battery is to back-up the microprocessor RAM chips and the real-time clock. However, the back-up battery also maintains the RTU configuration during a power-supply interruption.

NOTICE
LOSS OF DATA RTU memory contents are lost when: • The onboard RAM back-up battery goes flat. • The onboard RAM back-up battery is replaced while power to the RTU is disconnected. When memory contents are lost, RTU configuration information and user-created applications must be reloaded for correct RTU operation. **Failure to follow these instructions can result in equipment damage.**

NOTICE
UNEXPECTED EQUIPMENT OPERATION Before replacing the onboard RAM back-up battery, save a copy of the RTU configuration information, user-created applications, logs and other data to an external drive so it can be reloaded when the procedure is complete. **Failure to follow these instructions can result in equipment damage.**

The onboard RAM back-up battery will retain the RTU configuration for at least two years if the unit is not powered. Replace the battery after every five years of continuous use, or earlier if necessary.

RAM back-up batteries are not rechargeable.

Power Supply Notifications

The RTU provides notifications for the following:

- Onboard lithium battery low
- Input power supply low

If an Input Power Supply low notification is generated, it may be due to power supply interruption, and/or low voltage on primary DC backup batteries.

Cleaning

There are no special cleaning instructions for this product.

Routine Maintenance Schedule

The frequency of routine maintenance depends on the specific piece of equipment and the environment in which it is installed. Routine maintenance is recommended at two time-intervals:

- Every three years
- Every five years

The following table summarizes the recommended frequency for maintenance procedures. In some cases, the period stated is the maximum interval between maintenance activities. Experience, or the high usage of a particular piece of equipment, may determine that maintenance procedures need to be performed more frequently than indicated in the table

Items requiring re-calibration may not be suitable for user servicing. Contact Schneider Electric for advice 6.

Routine Maintenance Schedule

Component	Every Three Years	Every Five Years
Connections and ground points	CR	
Power supply units		CR
Modems	CR	
RAM back-up battery	CR	R

R=Replace CR=Check and replace if necessary

11.4 Replacing the Battery

A flat-package lithium battery located on the controller board provides back-up power to the RTU's real-time clock and RAM memory.

Replace this battery with a Tadiran TL-5186 3.6V lithium battery as soon as possible after the RTU reports that the RAM battery status is low and at the intervals recommended in the Routine Maintenance 106 section.

The RAM battery status is provided on the Controller Status property page in the SCADAPack E Configurator software. Take care not to confuse this status with an external power supply low condition.

The following procedure requires the RTU to be powered off briefly. It also requires restarting the RTU in Cold Boot mode. As a result, the following precautions should be carefully considered before proceeding.

Back-Up Data Before Replacing the Battery

NOTICE

UNEXPECTED EQUIPMENT OPERATION

RTU memory contents are lost when:

- The onboard RAM back-up battery goes flat.
- The onboard RAM back-up battery is replaced while power to the RTU disconnected, as required in the procedure below.
- The RTU is started in Factory Boot mode or in Cold Boot mode. Starting in Cold Boot mode is required in the procedure below.

When memory contents are lost, RTU configuration information and user-created applications must be reloaded for correct RTU operation.

Failure to follow these instructions can result in equipment damage.

NOTICE

UNEXPECTED EQUIPMENT OPERATION.

Before replacing the onboard RAM back-up battery or starting the RTU in Factory Boot mode or Cold Boot mode, save a copy of the RTU configuration information, user-created applications, logs and other data to an external drive so it can be reloaded when the procedure is complete.

Failure to follow these instructions can result in equipment damage.

NOTICE

UNEXPECTED EQUIPMENT OPERATION

The electronics inside the RTU can be damaged by static electricity. If you need to remove the RTU cover, wear an anti-static wrist strap that is connected to ground. Failing to follow this simple step can cause intermittent or total loss of RTU operation and will void the warranty.

Failure to follow these instructions can result in equipment damage.

⚠WARNING

UNEXPECTED EQUIPMENT OPERATION

Evaluate the operational state of the equipment being monitored or controlled by the RTU before removing power.

Failure to follow these instructions can result in death or serious injury.

To Replace the Onboard RAM Back-up Battery

1. Remove power from the RTU.
2. Put on an anti-static wrist strap and verify that it is connected to ground.
3. Remove the RTU cover.
4. Cut the tie wrap on the battery and carefully remove it from its socket on the controller board.
5. Insert the new Tadiran TL-5186 3.6V lithium battery. The tie wrap is intended to keep the battery in place during shipping and does not need to be replaced.
6. Reattach the RTU cover.
7. Apply power to the RTU and start it in Cold Boot mode by holding the **Select** button down for 20 seconds until the **Status** LED begins blinking on and off.
8. In SCADAPack E Configurator, use the **Transfer > Set RTU** time to reset the time on the RTU.
9. Reload the RTU configuration and user-created applications from back-up.

11.5 Updating Firmware

On the SCADAPack 530E, you can update:

- RTU operating system firmware in offline mode or online mode
- RTU boot monitor firmware in offline mode or online mode

For the procedures to update firmware, see the SCADAPack E Firmware Update User Manual.

12 Specifications

The following topics provide detailed hardware specifications for the RTU, its ports and its inputs and outputs.

12.1 General

Environment	-40°C … 70°C (-40°F…158°F) operating temperature when mounted on a horizontally oriented DIN rail -40°C … 65°C (-40°F…149°F) operating temperature when mounted on a vertically oriented DIN rail -40°C … 85°C (-40°F…185°F) storage temperature 5% to 95% relative humidity, non-condensing Pollution Degree 2, Installation Category I, Indoor use
Elevation	3,000 m (9,842 ft)
Terminations	3.3 mm^2 to .08 mm^2 (12 AWG to 28 AWG), solid or stranded
Packaging	Corrosion-resistant and RoHS-compliant clear zinc-plated steel with black enamel paint
SCADAPack 535E Dimensions	151 mm (5.9 in.) wide 182 mm (7.2 in.) high 87 mm (3.4 in.) deep
SCADAPack 530E Dimensions	151 mm (5.9 in.) wide 135 mm (5.3 in.) high 75 mm (3.0 in.) deep
6601 I/O Expansion Module Dimensions	151 mm (5.9 in.) wide 182 mm (7.2 in.) high 47 mm (1.9 in.) deep
Shock	IEC 61131-2 ½ sine, 15 ms, 15 g
Vibration	IEC 61131-2 5 – 8.4 Hz: Amplitude controlled, 7.0 mm (0.28 in.) peak-to-peak 8.4 – 150 Hz: Acceleration controlled, 1.0 g peak

12.2 Power Supply

Input Voltage	Rated voltage: 12…30 Vdc Limit voltage: 11.5...32 Vdc Turn-on voltage: 10…11.5 Vdc Turn-off voltage: 9..10 Vdc
Maximum Power	SCADAPack 530E plus 4 6601 I/O expansion modules plus USB: 8.6 W
Power Requirements	SCADAPack 530E: 3.7 W SCADAPack 535E with integrated I/O: 4.8 W 6601 I/O expansion module: 1.1 W USB (5 V at 100 mA): 0.6 W Serial port (5 V at 250 mA): 1.5 W Also see Power Supply Requirements 46
Maximum System Configuration	SCADAPack 535E plus 3 6601 I/O expansion modules SCADAPack 530E plus 4 6601 I/O expansion modules SCADAPack 535E plus 2 6601 I/O expansion modules plus serial port 5 V SCADAPack 530E plus 3 6601 I/O expansion modules plus serial port 5 V USB 5 V at 100 mA permissible in any configuration
Isolation	Controller power input, USB and serial communication ports are not isolated from the enclosure See the relevant specifications for I/O point isolation information
Protection	Protected up to 60 Vdc for over-voltages and reverse polarity voltages Inrush current limited
Cable Length	Maximum: 30 m (98.4 ft)

12.3 Controller Board

Processor	ST SPEAr 1380 32-bit, dual-core Cortex™ A9 microcontroller

Floating Point	Integrated Hardware Floating Point Unit
CPU Speed	Up to 600 MHz
Memory	128 MB NAND Flash 128 MB DDR3 RAM
Non-volatile RAM	Non-volatile CMOS SRAM with lithium battery retains content for up to two years when not connected to an active power source
Internal Analog Inputs	Power input: 37 V full scale. Accuracy is 0.5% of full scale. Onboard lithium battery: 4 V full scale. Accuracy is 0.5% of full scale. 5 V power supply: 6 V full scale. Accuracy is 0.5% of full scale. 3.3 V power supply: 4 V full scale. Accuracy is 0.5% of full scale
Internal Temperature Monitor	Controller temperature: -40°C…75°C (-40°F...167°F)
Clock Calendar	±15 seconds per month at -15°C…60°C (5°F...140°F)

12.4 Data Capacity

Maximum Database Points	Approximately 20,000 Reduced if event pool increased above approximately 7,000 events
Maximum DNP3 Events	40,000 Reduced if database points increased above approximately 10,000 points
Maximum Data Concentrator points	Approximately 15,000
Maximum Data Concentrator Devices	Approximately 100
File System Typical Storage	10 MB
Maximum Trend Sample Files	400 (when no user programming used)
Remote Upload Trend Data: Integers	100,000
Remote Upload Trend Data: Floats	50,000
Trend Aggregation	Up to 10 MB with Restart History used in ISaGRAF 3 or SCADAPack Workbench See the SCADAPack E Trend Sampler Technical Manual for details
Local Access Aggregated Trend Data: Integers	2,500,000
Local Access Aggregated Trend Data: Floats	1,250,000
USB Host Storage	Single-partition plug-in USB mass storage devices up to 32 GB

12.5 Communications

Serial1, 2	RS232 signals: TxD, RxD, CTS, RTS, DCD, DTR
Serial3, 4	RS232 signals: TxD, RxD RS485: 2-wire half-duplex operation
Serial1…4	5 V at 250 mA available 8-pin modular jack connector (RJ45) Baud rates up to 115,200 bps
Cable Length	RS232: Maximum 15 m (50 ft) RS485: Maximum 1200 m (3937 ft)
Protection	RS232 ports are rated to ±15kV (IEC 61000-4-2, Air Discharge) static protection
Ethernet 1, 2, 3	10/100 Mbps UTP (10/100Base-T) transformer isolated
USB Host Port	USB 2.0-compliant A-type receptacle Supports USB mass storage devices up to 32 GB
USB Device Port	USB 2.0-compliant B-type receptacle
I/O Bus	I/O expansion module bus. The RTU supports the 6601 I/O expansion module which provides: • 16 digital inputs, 8 of which have an associated counter • 8 digital (relay) outputs • 6 analog inputs • 2 analog outputs (this option is selected when the 6601 I/O expansion module is ordered)
Maximum Modbus/TCP Server Connections	Fixed: 20

12.6 Digital Inputs

Turn-on Voltage	Minimum: 8 Vdc
Turn-off Voltage	Maximum: 4 Vdc
Input Voltage	Maximum: 36 V
Input Resistance	30 kohms
Isolation	Ground return connected to chassis ground
Cable Length	Maximum: 3 m (9.84 ft)

12.7 Digital Output

Description	Sinking MOSFET output
Power Rating	30 V, 0.5 A
Isolation	Ground return connected to chassis ground
Cable Length	Maximum: 3 m (9.84 ft)

13 Standards and Certifications

Introduction

SCADAPack E RTUs have been designed to comply with the relevant standards and rules for electrical equipment in an industrial automation environment.

Industrial Standards

Requirements specific to the PAC functional characteristics, immunity, robustness, and safety:

- IEC/EN 61131-2
- CSA 22.2 No.142 completed by CSA-E 61131-2
- UL 508

European Directives for EC Marking

- Low voltage: 2006/95/EC (not applicable)
- Electromagnetic compatibility: 2004/108/EC

Installation in Classified Ex Area

- Hazardous locations class I, division 2, groups A, B, C, and D and class I, zone 2 according to CSA C22.2 No. 213, CSA C22.2 60079-0, CSA C22.2 60079-15, ANSI/ISA 60079-0, ANSI/ISA 60079-15, ANSI/ISA 12.12.01, FM 3600 and FM 3611
- EC ATEX (european directive 94/9/EC) in defined atmosphere zone 2 according to EN 60079-0 and EN 60079-15

Specific Countries

For Australia and New Zealand: ACMA requirements for RCM marking

For United States: FCC Part 15 Subpart B Class A

More details on certifications are available on the Schneider Electric website: www.schneider-electric.com.