MiCOM P341

Interconnection Protection Relay

P341/EN M/G74

Software Version	36 & 71
Hardware Suffix	J

Technical Manual

Schneider Electric

Note

The technical manual for this device gives instructions for its installation, commissioning, and operation. However, the manual cannot cover all conceivable circumstances or include detailed information on all topics. In the event of questions or specific problems, do not take any action without proper authorization. Contact the appropriate Schneider Electric technical sales office and request the necessary information.

Any agreements, commitments, and legal relationships and any obligations on the part of Schneider Electric including settlements of warranties, result solely from the applicable purchase contract, which is not affected by the contents of the technical manual.

This device MUST NOT be modified. If any modification is made without the express permission of Schneider Electric, it will invalidate the warranty, and may render the product unsafe.

CONTENTS

Notes:

SAFETY INFORMATION

CHAPTER SI

CONTENTS

Notes:

1 INTRODUCTION

This guide and the relevant equipment documentation provide full information on safe handling, commissioning and testing of this equipment. This Safety Information section also includes reference to typical equipment label markings.

Documentation for equipment ordered from Schneider Electric is dispatched separately from manufactured goods and may not be received at the same time. Therefore this guide is provided to ensure that printed information which may be present on the equipment is fully understood by the recipient.

The technical data in this Safety Information section is typical only, see the technical data section of the relevant product publication(s) for data specific to a particular equipment.

WARNING **Before carrying out any work on the equipment the user should be familiar with the contents of this Safety Information section and the ratings on the equipment's rating label.**

Reference should be made to the external connection diagram before the equipment is installed, commissioned or serviced.

Language-specific, self-adhesive User Interface labels are provided in a bag for some equipment.

2 HEALTH AND SAFETY

The information in the Safety Information section of the equipment documentation is intended to ensure that equipment is properly installed and handled in order to maintain it in a safe condition.

It is assumed that everyone who will be associated with the equipment will be familiar with the contents of that Safety Information section, or this Safety Guide.

When electrical equipment is in operation, dangerous voltages will be present in certain parts of the equipment. Failure to observe warning notices, incorrect use, or improper use may endanger personnel and equipment and also cause personal injury or physical damage.

Before working in the terminal strip area, the equipment must be isolated.

Proper and safe operation of the equipment depends on appropriate shipping and handling, proper storage, installation and commissioning, and on careful operation, maintenance and servicing. For this reason only qualified personnel may work on or operate the equipment.

Qualified personnel are individuals who:

- Are familiar with the installation, commissioning, and operation of the equipment and of the system to which it is being connected;
- Are able to safely perform switching operations in accordance with accepted safety engineering practices and are authorized to energize and de-energize equipment and to isolate, ground, and label it;
- Are trained in the care and use of safety apparatus in accordance with safety engineering practices;
- Are trained in emergency procedures (first aid).

The equipment documentation gives instructions for its installation, commissioning, and operation. However, the manuals cannot cover all conceivable circumstances or include detailed information on all topics. In the event of questions or specific problems, do not take any action without proper authorization. Contact the appropriate Schneider Electric technical sales office and request the necessary information.

3 SYMBOLS AND LABELS ON THE EQUIPMENT

For safety reasons the following symbols and external labels, which may be used on the equipment or referred to in the equipment documentation, should be understood before the equipment is installed or commissioned.

3.1 Symbols

Caution: refer to equipment documentation

Caution: risk of electric shock

Protective Conductor (*Earth) terminal

Functional/Protective Conductor (*Earth) terminal

Note:	*This symbol may also be used for a Protective Conductor (Earth) Terminal if that terminal is part of a terminal block or sub-assembly e.g. power supply.*

***CAUTION:**	**The term "Earth" used throughout this technical manual is the direct equivalent of the North American term "Ground".**

3.2 Labels

See Safety Guide (SFTY/4L M) for typical equipment labeling information.

4 INSTALLING, COMMISSIONING AND SERVICING

Manual Handling

Plan carefully, identify any possible hazards and determine whether the load needs to be moved at all. Look at other ways of moving the load to avoid manual handling. Use the correct lifting techniques and Personal Protective Equipment to reduce the risk of injury.

Many injuries are caused by:

- Lifting heavy objects
- Lifting things incorrectly
- Pushing or pulling heavy objects
- Using the same muscles repetitively.

Follow the Health and Safety at Work, etc Act 1974, and the Management of Health and Safety at Work Regulations 1999.

Equipment Connections

Personnel undertaking installation, commissioning or servicing work for this equipment should be aware of the correct working procedures to ensure safety.

The equipment documentation should be consulted before installing, commissioning, or servicing the equipment.

Terminals exposed during installation, commissioning and maintenance may present a hazardous voltage unless the equipment is electrically isolated.

The clamping screws of all terminal block connectors, for field wiring, using M4 screws shall be tightened to a nominal torque of 1.3 Nm.

Equipment intended for rack or panel mounting is for use on a flat surface of a Type 1 enclosure, as defined by Underwriters Laboratories (UL).

Any disassembly of the equipment may expose parts at hazardous voltage, also electronic parts may be damaged if suitable ElectroStatic voltage Discharge (ESD) precautions are not taken.

If there is unlocked access to the rear of the equipment, care should be taken by all personnel to avoid electric shock or energy hazards.

Voltage and current connections shall be made using insulated crimp terminations to ensure that terminal block insulation requirements are maintained for safety.

Watchdog (self-monitoring) contacts are provided in numerical relays to indicate the health of the device. Schneider Electric strongly recommends that these contacts are hardwired into the substation's automation system, for alarm purposes.

To ensure that wires are correctly terminated the correct crimp terminal and tool for the wire size should be used.

The equipment must be connected in accordance with the appropriate connection diagram.

Protection Class I Equipment

- Before energizing the equipment it must be earthed using the protective conductor terminal, if provided, or the appropriate termination of the supply plug in the case of plug connected equipment.
- The protective conductor (earth) connection must not be removed since the protection against electric shock provided by the equipment would be lost.
- When the protective (earth) conductor terminal (PCT) is also used to terminate cable screens, etc., it is essential that the integrity of the protective (earth) conductor is checked after the addition or removal of such functional earth connections. For M4 stud PCTs the integrity of the protective (earth) connections should be ensured by use of a locknut or similar.

The recommended minimum protective conductor (earth) wire size is 2.5 mm² (3.3 mm² for North America) unless otherwise stated in the technical data section of the equipment documentation, or otherwise required by local or country wiring regulations.

The protective conductor (earth) connection must be low-inductance and as short as possible.

All connections to the equipment must have a defined potential. Connections that are pre-wired, but not used, should preferably be grounded when binary inputs and output relays are isolated. When binary inputs and output relays are connected to common potential, the pre-wired but unused connections should be connected to the common potential of the grouped connections.

Pre-Energization Checklist

Before energizing the equipment, the following should be checked:

- Voltage rating/polarity (rating label/equipment documentation);
- CT circuit rating (rating label) and integrity of connections;
- Protective fuse rating;
- Integrity of the protective conductor (earth) connection (where applicable);
- Voltage and current rating of external wiring, applicable to the application.

Accidental Touching of Exposed Terminals

If working in an area of restricted space, such as a cubicle, where there is a risk of electric shock due to accidental touching of terminals which do not comply with IP20 rating, then a suitable protective barrier should be provided.

Equipment Use

If the equipment is used in a manner not specified by the manufacturer, the protection provided by the equipment may be impaired.

Removal of the Equipment Front Panel/Cover

Removal of the equipment front panel/cover may expose hazardous live parts, which must not be touched until the electrical power is removed.

UL and CSA/CUL Listed or Recognized Equipment

To maintain UL and CSA/CUL Listing/Recognized status for North America the equipment should be installed using UL or CSA Listed or Recognized parts for the following items: connection cables, protective fuses/fuseholders or circuit breakers, insulation crimp terminals and replacement internal battery, as specified in the equipment documentation.

For external protective fuses a UL or CSA Listed fuse shall be used. The Listed type shall be a Class J time delay fuse, with a maximum current rating of 15 A and a minimum d.c. rating of 250 Vd.c., for example type AJT15.

Where UL or CSA Listing of the equipment is not required, a high rupture capacity (HRC) fuse type with a maximum current rating of 16 Amps and a minimum d.c. rating of 250 Vd.c. may be used, for example Red Spot type NIT or TIA.

Equipment Operating Conditions

The equipment should be operated within the specified electrical and environmental limits.

Current Transformer Circuits

Do not open the secondary circuit of a live CT since the high voltage produced may be lethal to personnel and could damage insulation. Generally, for safety, the secondary of the line CT must be shorted before opening any connections to it.

For most equipment with ring-terminal connections, the threaded terminal block for current transformer termination has automatic CT shorting on removal of the module. Therefore external shorting of the CTs may not be required, the equipment documentation should be checked to see if this applies.

For equipment with pin-terminal connections, the threaded terminal block for current transformer termination does NOT have automatic CT shorting on removal of the module.

External Resistors, including Voltage Dependent Resistors (VDRs)

Where external resistors, including Voltage Dependent Resistors (VDRs), are fitted to the equipment, these may present a risk of electric shock or burns, if touched.

Battery Replacement

Where internal batteries are fitted they should be replaced with the recommended type and be installed with the correct polarity to avoid possible damage to the equipment, buildings and persons.

Insulation and Dielectric Strength Testing

Insulation testing may leave capacitors charged up to a hazardous voltage. At the end of each part of the test, the voltage should be gradually reduced to zero, to discharge capacitors, before the test leads are disconnected.

Insertion of Modules and PCB Cards

Modules and PCB cards must not be inserted into or withdrawn from the equipment whilst it is energized, since this may result in damage.

Insertion and Withdrawal of Extender Cards

Extender cards are available for some equipment. If an extender card is used, this should not be inserted or withdrawn from the equipment whilst it is energized. This is to avoid possible shock or damage hazards. Hazardous live voltages may be accessible on the extender card.

External Test Blocks and Test Plugs

Great care should be taken when using external test blocks and test plugs such as the MMLG, MMLB and MiCOM P990 types, hazardous voltages may be accessible when using these. *CT shorting links must be in place before the insertion or removal of MMLB test plugs, to avoid potentially lethal voltages.

**Note:*	*When a MiCOM P992 Test Plug is inserted into the MiCOM P991 Test Block, the secondaries of the line CTs are automatically shorted, making them safe.*

Fiber Optic Communication

Where fiber optic communication devices are fitted, these should not be viewed directly. Optical power meters should be used to determine the operation or signal level of the device.

Cleaning

The equipment may be cleaned using a lint free cloth dampened with clean water, when no connections are energized. Contact fingers of test plugs are normally protected by petroleum jelly, which should not be removed.

5 DE-COMMISSIONING AND DISPOSAL

De-commissioning

The supply input (auxiliary) for the equipment may include capacitors across the supply or to earth. To avoid electric shock or energy hazards, after completely isolating the supplies to the equipment (both poles of any dc supply), the capacitors should be safely discharged via the external terminals prior to de-commissioning.

Disposal

It is recommended that incineration and disposal to water courses is avoided. The equipment should be disposed of in a safe manner. Any equipment containing batteries should have them removed before disposal, taking precautions to avoid short circuits. Particular regulations within the country of operation, may apply to the disposal of the equipment.

6 TECHNICAL SPECIFICATIONS FOR SAFETY

Unless otherwise stated in the equipment technical manual, the following data is applicable.

6.1 Protective Fuse Rating

The recommended maximum rating of the external protective fuse for equipments is 16A, High Rupture Capacity (HRC) Red Spot type NIT, or TIA, or equivalent. Unless otherwise stated in equipment technical manual, the following data is applicable. The protective fuse should be located as close to the unit as possible.

DANGER **CTs must NOT be fused since open circuiting them may produce lethal hazardous voltages.**

6.2 Protective Class

IEC 60255-27: 2005	Class I (unless otherwise specified in the equipment documentation).
EN 60255-27: 2005	This equipment requires a protective conductor (earth) connection to ensure user safety.

6.3 Installation Category

IEC 60255-27: 2005	Installation Category III (Overvoltage Category III)
EN 60255-27: 2005	Distribution level, fixed installation.
	Equipment in this category is qualification tested at 5 kV peak, 1.2/50 µs, 500 Ω, 0.5 J, between all supply circuits and earth and also between independent circuits.

6.4 Environment

The equipment is intended for indoor installation and use only. If it is required for use in an outdoor environment then it must be mounted in a specific cabinet of housing which will enable it to meet the requirements of IEC 60529 with the classification of degree of protection IP54 (dust and splashing water protected).

Pollution Degree	Pollution Degree 2 Compliance is demonstrated by reference to safety standards.
Altitude	Operation up to 2000m

INTRODUCTION

CHAPTER 1

Date:	February 2012
Hardware Suffix:	J
Software Version:	31 and 71 (with DLR)
Connection Diagrams:	10P341xx (xx = 01 to 12)

CONTENTS

FIGURES

TABLES

Notes:

1 DOCUMENTATION STRUCTURE

The manual provides a functional and technical description of the MiCOM protection relay and a comprehensive set of instructions for the relay's use and application.

The chapter contents are summarized below:

P341/EN IT	1. Introduction A guide to the range of relays and the documentation structure. General safety aspects of handling Electronic Equipment is discussed with particular reference to relay safety symbols. Also a general functional overview of the relay and brief application summary is given.
P341/EN TD	2. Technical Data Technical data including setting ranges, accuracy limits, recommended operating conditions, ratings and performance data. Compliance with norms and international standards is quoted where appropriate.
P34x_P341/EN GS	3. Getting Started A guide to the different user interfaces of the protection relay describing how to start using it. This chapter provides detailed information regarding the communication interfaces of the relay, including a detailed description of how to access the settings database stored within the relay.
P341/EN ST	4. Settings List of all relay settings, including ranges, step sizes and defaults, together with a brief explanation of each setting.
P341/EN OP	5. Operation A comprehensive and detailed functional description of all protection and non-protection functions.
P341/EN AP	6. Application Notes This chapter includes a description of common power system applications of the relay, calculation of suitable settings, some typical worked examples, and how to apply the settings to the relay.
P341/EN PL	7. Programmable Logic Overview of the Programmable Scheme Logic (PSL) and a description of each logical node. This chapter includes the factory default and an explanation of typical applications.
P341/EN MR	8. Measurements and Recording Detailed description of the relays recording and measurements functions including the configuration of the event and disturbance recorder and measurement functions.
P341/EN FD	9. Firmware Design Overview of the operation of the relay's hardware and software. This chapter includes information on the self-checking features and diagnostics of the relay.

P341/EN CM	10. Commissioning Instructions on how to commission the relay, comprising checks on the calibration and functionality of the relay.
Pxxx/EN MT	11. Maintenance A general maintenance policy for the relay is outlined.
Pxxx/EN TS	12. Troubleshooting Advice on how to recognize failure modes and the recommended course of action. Includes guidance on whom within Schneider Electric to contact for advice.
P341/EN SC	13. SCADA Communications This chapter provides an overview regarding the SCADA communication interfaces of the relay. Detailed protocol mappings, semantics, profiles and interoperability tables are not provided within this manual. Separate documents are available per protocol, available for download from our website.
Pxxx/EN SG	14. Symbols and Glossary List of common technical abbreviations found within the product documentation.
P341/EN IN	15. Installation Recommendations on unpacking, handling, inspection and storage of the relay. A guide to the mechanical and electrical installation of the relay is provided, incorporating earthing recommendations. All external wiring connections to the relay are indicated.
P341/EN VH	16. Firmware and Service Manual Version History History of all hardware and software releases for the product.

2 INTRODUCTION TO MICOM

MiCOM is a comprehensive solution capable of meeting all electricity supply requirements. It comprises a range of components, systems and services from Schneider Electric.

Central to the MiCOM concept is flexibility.

MiCOM provides the ability to define an application solution and, through extensive communication capabilities, integrate it with your power supply control system.

The components within MiCOM are:

- P range protection relays;
- C range control products;
- M range measurement products for accurate metering and monitoring;
- S range versatile PC support and substation control packages.

MiCOM products include extensive facilities for recording information on the state and behavior of the power system using disturbance and fault records. At regular intervals they can provide measurements of the system to a control center, allowing remote monitoring and control.

For up-to-date information on any MiCOM product, visit our website:

www.schneider-electric.com

3 PRODUCT SCOPE

The P341 protection relay (3x software) has been designed for the protection of the interconnecting feeder at the point of connection of a Distributed Generator (DG) with the main power supply network. The relay provides flexible and reliable integration of protection, control, monitoring and measurements for this interconnection application such as voltage and frequency protection and Loss Of Mains/grid (LOM) protection (df/dt or voltage vector shift) plus feeder protection (overcurrent and earth fault) and CB control with check synchronization. Extensive functionality is available to satisfy complete protection and control for a wide range of system applications, including protection for both the connection point and DG in simple applications or the more sophisticated interconnection protection necessary for larger units or those connected at higher voltages.

ThePP341 protection relay (7x software) has additionally been designed to provide Dynamic Line Rating (DLR) protection. With the increase of embedded generation in the distribution network, there is a need for the electricity distributors to optimize their network resources.

The overhead line thermal rating is based on the highest current that a power line can carry without compromising the strength of the conductor material or without the conductor sagging too low. The conventional way of evaluating a line rating is to input fixed, generally very conservative, meteorological values into standard, internationally used formulae to calculate the summer and winter ratings. But in reality, the real capacity is not static; it varies with the meteorological (weather) conditions - wind speed and direction, ambient temperature, and solar radiation which all contribute to cooling or heating of the transmission line, which affects how much power it can carry. DLR uses real-time measurements from the weather sensors, to calculate the real time rating automatically which is compared to the line current. When the line current is close to the line thermal rating control commands can be sent to hold or lower the power output of Renewable Energy Sources (RES) such as windfarms or as a last resort trip out the windfarm. This allows optimization of the transmission line capability and power output of the RES. The P341 relay uses the CLIO interfaces for the weather measurements – wind speed, wind direction, ambient temperature and solar radiation.

3.1 Functional Overview

The P341 interconnection and DLR protection relay contains a wide variety of protection functions. The protection features are summarized below:

PROTECTION FUNCTIONS OVERVIEW		P341
81R	Four rate of change of frequency elements are provided to detect a loss of mains/grid condition or can be used for load shedding applications.	1
$\Delta V\phi$	One voltage vector shift element is provided to detect a loss of mains condition.	1
50/51/67	Four stages of overcurrent protection are provided which can be selected to be either non-directional, directional forward or directional reverse. Stages 1 and 2 may be set Inverse Definite Minimum Time (IDMT) or Definite Time (DT); stages 3 and 4 may be set DT only.	1
50N/51N/67N	Four stages of earth fault protection are provided which can be selected to be either non-directional, directional forward or directional reverse. Stages 1 and 2 may be set Inverse Definite Minimum Time (IDMT) or Definite Time (DT); stages 3 and 4 may be set DT only.	1

PROTECTION FUNCTIONS OVERVIEW		P341
67N/67W	One sensitive earth fault element is provided for discriminative earth fault protection of parallel generators. The protection can be selected to be either non-directional, directional forward or directional reverse. Either Zero sequence polarizing is available. The Sensitive Earth Fault element can be configured as an Icosϕ, Isinϕ or VIcosϕ (Wattmetric) element for application to isolated and compensated networks.	1
64	Restricted earth fault is configurable as a high impedance or low impedance element.	1
59N	Residual overvoltage protection is available. The residual voltage can be measured from a broken delta VT, from the secondary winding of an open delta, or can be calculated from the three phase to neutral voltage measurements. Two independent stages of protection are provided for each measured neutral voltage input and also for the calculated value, each stage can be selected as either IDMT or DT.	1
27	One 2 stage undervoltage protection element, configurable as either phase to phase or phase to neutral measuring is provided. Stage 1 may be selected as either IDMT or DT and stage 2 is DT only.	1
59	One 2 stage overvoltage protection element, configurable as either phase to phase or phase to neutral measuring is provided to back up the automatic voltage regulator. Stage 1 may be selected as either IDMT or DT and stage 2 is DT only.	1
81U/O	One 4 stage definite time underfrequency and 2 stage definite time overfrequency protection is provided for load shedding and back-up protection of the speed control governor.	1
32R, 32L, 32O	Two definite time stages of power protection are provided and each stage can be independently configured to operate as Reverse Power (RP), Over Power (OP) or Low Forward Power (LFP) protection. The direction of the power measured by the protection can be reversed by selecting the operating mode, generating/motoring. The power protection can be used to provide simple back-up Overload Protection (OP), protection against motoring or loss of mains detection where export of power from the DG is not allowed (RP, generating mode), CB interlocking to prevent overspeeding during machine shutdown (LFP, generating mode) and loss of load protection (LFP, motoring mode). The relays provide a standard 3 phase power protection element and also a single phase power protection element which can be used with a dedicated metering class CT using the sensitive current input.	1
49	Thermal overload protection based on I1 and I2 is provided to protect the stator/rotor against overloading due to balanced and unbalanced currents. Both alarm and trip stages are provided.	1
46OC	Four definite time stages of negative phase sequence overcurrent protection are provided for remote back-up protection for both phase to earth and phase to phase faults. Each stage can be selected to be either non-directional, directional forward or directional reverse.	1
47	One definite time negative phase sequence overvoltage protection element is provided for either a tripping or interlocking function upon detection of unbalanced supply voltages.	1
50BF	One 2 stage circuit breaker failure function is provided with a 3 pole initiation input from external protection.	1
CTS	Current transformer supervision is provided to prevent mal-operation of current dependent protection elements upon loss of a CT input signal.	1

PROTECTION FUNCTIONS OVERVIEW		P341
VTS	Voltage transformer supervision is provided (1, 2 & 3 phase fuse failure detection) to prevent mal-operation of voltage dependent protection elements upon loss of a VT input signal.	1
49DLR	Six stages of Dynamic Rating protection which can be applied for load management and protection of overhead lines enabling a larger penetration of Distributed Generation (DG) such as windfarms. The CLIO card is required for the weather sensors – wind speed, wind direction, ambient temperature and solar radiation.	V 7x Soft.
25	Check synchronizing (2-stage) with advanced system split features and breaker closing compensation time is provided. The P341 (60TE case) includes a dedicated voltage input for check synchronizing. For the P341 (40TE case) the VNeutral input can be used for neutral voltage protection or check synchronizing.	2
CLIO	Four analog (or current loop) inputs are provided for transducers (vibration, tachometers etc. or wind speed, wind direction, ambient temperature and solar radiation for DLR applications). Each input has a definite time trip and alarm stage and each input can be set to operate for 'Over' or 'Under' operation. Each input can be independently selected as 0-1/0-10/0-20/4-20 mA. Four analogue (or current loop) outputs are provided for the analogue measurements in the relay. Each output can be independently selected as 0-1/0-10/0-20/4-20 mA.	Option
	Phase rotation - the rotation of the phases ABC or ACB for all 3 phase current and voltage channels can be selected. Also, for pumped storage applications where two phases are swapped the swapping of two phases can be emulated independently for the 3-phase voltage and 3-phase current channels.	1
	Programmable LEDs (red)	8
	Digital inputs (order option)	8 to 24
	Output relays (order option)	7 to 24
	Front communication port (EIA(RS)232)	1
	Rear communication port (KBUS/EIA(RS)485). The following communications protocols are supported; Courier, MODBUS, IEC 870-5-103 (VDEW) and DNP3.0.	1
	Rear communication port (Fiber Optic). The following communications protocols are supported; Courier, MODBUS, IEC 870-5-103 (VDEW) and DNP3.0.	Option
	Second rear communication port (EIA(RS)232/EIA(RS)485). Courier protocol.	Option
	Rear IEC 61850 Ethernet communication port.	Option
	Rear redundant IEC 61850 Ethernet communication port.	Option
	Time synchronization port (IRIG-B)	Option

Table 1 - Functional overview

In addition to the functions in Table 1, the P341 supports the following relay management functions:

- Measurement of all instantaneous & integrated values
- Circuit breaker control, status & condition monitoring
- Trip circuit and coil supervision (using PSL)
- Four alternative setting groups
- Control inputs

- Programmable scheme logic
- Programmable allocation of digital inputs and outputs
- Sequence of event recording
- Comprehensive disturbance recording (waveform capture)
- Fault recording
- Fully customizable menu texts
- Multi-level password protection
- Power-up diagnostics and continuous self-monitoring of relay
- Commissioning test facilities
- Real time clock/time synchronization - time synchronization possible from IRIG-B input, opto input or communications

3.2 Application Overview

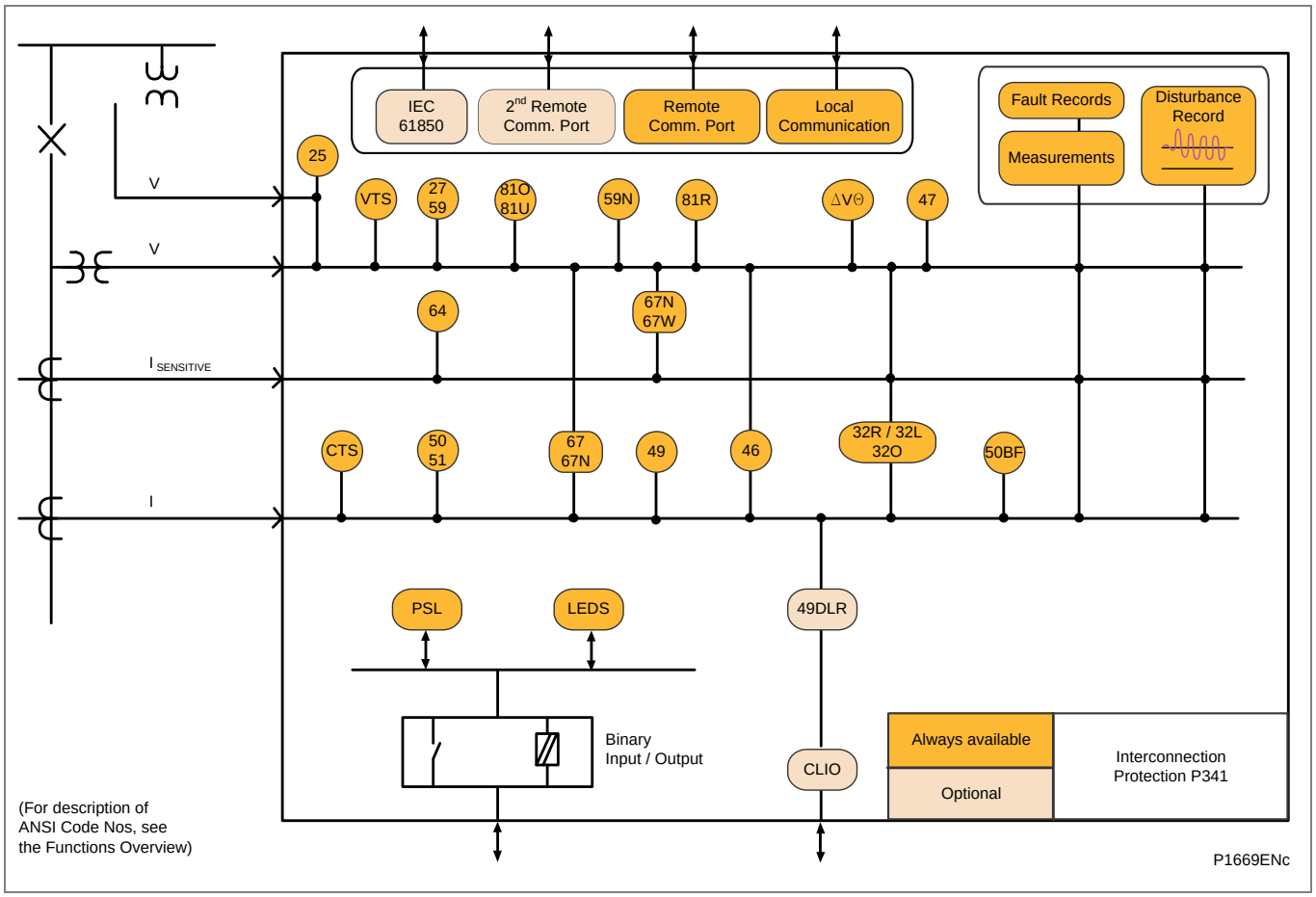

Figure 1 - Functional diagram

3.3 Ordering Options

Information required with order

P341 Interconnection Protection Relay	**P341**										
Vx Aux rating											
24-48 Vdc	1										
48-110 Vdc, 40-100 Vac	2										
110-250 Vdc, 100-240 Vac	3										
I/n/Vn rating											
In=1 A/5 A, Vn=100/120 V (40 TE case)		1									
In=1 A/5 A Vn=380/480 V (40 TE case)		2									
In=1 A/5 A, Vn=100/120 V, with Check Sync VT Input (60 TE case only)		3									
In=1 A/5 A, Vn=380/480 V, with Check Sync VT Input (60 TE case only)		4									
Hardware options											
Nothing			1								
IRIG-B only (Modulated)			2								
Fiber Optic Rear Comms Port			3								
IRIG-B (Modulated) & Fiber Optic Rear Comms Port			4								
Ethernet (100 Mbps)**			6								
2nd Rear Comms. Board*			7								
IRIG-B* (Modulated) plus 2nd Rear Comms Board			8								
Ethernet (100 Mbps) + IRIG-B (Modulated)**			A								
Ethernet (100 Mbps) + IRIG-B (Unmodulated) **			B								
IRIG-B (Unmodulated) **			C								
Redundant Ethernet Self-Healing Ring, 2 multi-mode fiber ports + (IRIG-B Modulated*)			G								
Redundant Ethernet Self-Healing Ring, 2 multi-mode fiber ports + IRIG-B* (Unmodulated*)			H								
Redundant Ethernet RSTP, 2 multi-mode fiber ports + IRIG-B* (Modulated*)			J								
Redundant Ethernet RSTP, 2 multi-mode fiber ports + IRIG-B* (Unmodulated*)			K								
Redundant Ethernet Dual Homing Star, 2 multi-mode fiber ports + IRIG-B* (Modulated*)			L								
Redundant Ethernet Dual Homing Star, 2 multi-mode fiber ports + IRIG-B* (Unmodulated*)			M								
Product specific											
Size 40TE Case, No Option (8 Optos + 7 Relays)				A							
Size 40TE Case, 8 Optos + 7 Relays + CLIO *				B							
Size 40TE Case, 16 Optos + 7 Relays*				C							
Size 40TE Case, 8 Optos + 15 Relays*				D							
Size 40TE Case, 12 Optos + 11 Relays*				E							
Size 60TE Case, 16 Optos + 16 Relays**				F							
Size 60TE Case, 16 Optos + 16 Relays + CLIO **				G							
Size 60TE Case, 24 Optos + 16 Relays**				H							
Size 60TE Case, 16 Optos + 24 Relays**				J							
Size 40TE Case, 8 Optos + 11 Relays (4 High Break)				K							

P341 Interconnection Protection Relay	P341									
Size 60TE Case, 16 Optos + 20 Relays (4 High Break)				L						
Size 60TE Case, 16 Optos + 12 Relays (4 High Break) + CLIO**				M						
Note: HB = High Break										
Protocol options										
K-Bus					1					
MODBUS					2					
IEC 60870-5-103 (VDEW)					3					
DNP3.0					4					
IEC 61850 + Courier via rear EIA(RS)485 port					6					
Mounting										
Panel Mounting						M				
Panel Mounting with Harsh Environment Coating						P				
Language options										
Multilingual - English, French, German, Spanish							0			
Multilingual - English, French, German, Russian							5			
Chinese, English or French via HMI, with English or French only via Communications port**							C			
Software number										
Latest software								36		
Latest software + Dynamic Line Rating								71		
Settings File										
Default									0	
Customer									A	
Design suffix										
Phase 2 CPU and front panel with 2 hotkeys and dual characteristic optos										J
Improved power supply										C
Universal Optos, low powered relay outputs										B
Original release – phase 1										A

Note Design Suffix

A = Original hardware (48 V opto inputs only, lower contact rating, no I/O expansion available)

C = Universal optos, new high capacity relays, new power supply

J = Phase 2 CPU and front panel with 2 hotkeys and dual characteristic optos

* Not available in design suffix A relays

** Not available in design suffix A,B, C

Note *For rack mounting assembled single rack frames and blanking plates are available*

Notes:

TECHNICAL DATA

CHAPTER 2

Date:	February 2012
Hardware Suffix:	J
Software Version:	36 and 71 (with DLR)
Connection Diagrams:	10P341xx (xx = 01 to 12)

CONTENTS

Notes:

MECHANICAL SPECIFICATIONS

Design
Modular platform relay, P341 in 40 TE or 60 TE case. Mounting is front of panel flush mounting, or 19“ rack mounted with rack frame (ordering options).

Enclosure protection
Per IEC 60529: 1992:

IP 52 Protection (front panel) against dust and dripping water,
IP 50 Protection for rear and sides of the case, against dust,
IP 10 Protection Product safety protection for the rear due to live connections on the terminal block.

Weight
P341 (40 TE) :7 kg
P341 (60 TE) :9.2 kg

TERMINALS

AC current and voltage measuring inputs
Located on heavy duty (black) terminal block:
Threaded M4 terminals, for ring lug connection.
CT inputs have integral safety shorting, on removal of the terminal block.

General input/output terminals
For power supply, opto inputs, output contacts and RP1 rear communications.
Located on general purpose (grey) blocks:
Threaded M4 terminals, for ring lug connection.

Case protective earth connection
Two rear stud connections, threaded M4.
Must be earthed (grounded) for safety, minimum earth wire size 2.5 mm2.

Front port serial PC interface
EIA(RS)232 DCE, 9 pin D-type female connector Socket SK1.
Courier protocol for interface to S1 Studio software.
Isolation to ELV (extra low voltage) level.
Maximum cable length 15 m.

Front download/monitor port
EIA(RS)232, 25 pin D-type female connector Socket SK2.
For firmware and menu text downloads.
Isolation to ELV level.

Rear communications port (RP1)
EIA(RS)485 signal levels, two wire connections located on general purpose block, M4 screw.
For screened twisted pair cable, multidrop, 1000 m max.
For K-Bus, IEC-60870-5-103, MODBUS or DNP3.0 protocol (ordering options).
Isolation to SELV (safety extra low low voltage) level.

Optional rear fiber connection for SCADA/DCS
BFOC 2.5 -(ST®)-interface for glass fiber, as per IEC 874-10.
850 nm short-haul fibers, one Tx and one Rx. For Courier, IEC-60870-5-103, MODBUS or DNP3.0 (Ordering options).

Optional second rear communications port (RP2)
EIA(RS)232, 9 pin D-type female connector, socket SK4.
Courier protocol: K-Bus, EIA(RS)232, or EIA(RS)485 connection.
Isolation to SELV level.

Optional rear IRIG-B interface modulated or unmodulated
BNC plug
Isolation to SELV level.
50 ohm coaxial cable.
Optional Rear Ethernet Connection for IEC 61850

Optional Rear Ethernet Connection for IEC 61850

10BaseT/100BaseTX Communications

Interface in accordance with IEEE802.3 and IEC 61850

Isolation: 1.5 kV
Connector type: RJ45
Cable type: Screened Twisted Pair (STP)
Max. cable length: 100 m

100 Base FX Interface

Interface in accordance with IEEE802.3 and IEC 61850

Wavelength: 1300 nm
Fiber: multi-mode 50/125 µm or 62.5/125 µm
Connector type: BFOC 2.5 - (ST®)

Optional Rear Redundant Ethernet Connection for IEC 61850

100 Base FX Interface

Interface in accordance with IEEE802.3 and IEC 61850

Wavelength: 1300 nm
Fiber: multi-mode 50/125 µm or 62.5/125 µm
Connector style: BFOC 2.5 -(ST®)

Transmitter Optical Characteristics 100 Base FX Interface

Parameter	Sym	Min	Typ	Max	Unit
Output Optical Power BOL 62.5/125 µm, NA = 0.275 Fiber EOL	PO	-19 -20	-16.8	-14	dBm avg.
Output Optical Power BOL 50/125 µm, NA = 0.20 Fiber EOL	PO	-22.5 -23.5	-20.3	-14	dBm avg.
Optical Extinction Ratio				10 -10	% dB
Output Optical Power at Logic “0” State	PO (“0”)			-45	dBm avg.

BOL - Beginning of life EOL - End of life

Receiver Optical Characteristics 100 Base FX Interface

Parameter	Sym	Min	Typ	Max	Unit
Input Optical Power Minimum at Window Edge	PIN Min. (W)		-33.5	-31	dBm avg.
Input Optical Power Minimum at Eye Center	PIN Min. (C)		-34.5	-31.8	Bm avg.
Input Optical Power Maximum	PIN Max.	-14	-11.8		dBm avg.

Fiber Defect Connector (Watchdog Relay) – Redundant Ethernet Board

Connector (3 terminals): 2 NC contacts
Rated voltage: 250 V
Continuous current: 5 A
Short-duration current: 30 A for 3 s
Breaking capacity:
DC: 50 W resistive
DC: 25 W inductive (L/R = 40 ms)
AC: 1500 VA resistive (cos ϕ = unity)
AC: 1500 VA inductive (cos ϕ = 0.5)
Subject to maxima of 5 A and 250 V

RATINGS

AC measuring inputs

Nominal frequency: 50 and 60 Hz (settable)
Operating range: 40 to 70 Hz

AC current

Nominal current (In): 1 and 5 A dual rated.
(1 A and 5 A inputs use different transformer tap connections, check correct terminals are wired).
Nominal burden:

<0.04 VA at In, <40 mΩ(0-30 In) In = 1 A
<0.01 VA at In, <8 mΩ(0-30 In) In = 5 A

Thermal withstand:

continuous 4 In
for 10 s: 30 In
for 1 s; 100 In

Standard: linear to 64 In (non-offset AC current).
Sensitive: linear to 2 In (non-offset AC current).

AC voltage

Nominal voltage (Vn): 100 to 120 V or 380 to 480 V phase-phase.

Nominal burden per phase:	< 0.02 VA at 110/√3 V or 440/√3 V
Thermal withstand:	continuous 2 Vn for 10 s: 2.6 Vn

Linear to 200 V (100 V/120 V), 800 V (380/480 V).

POWER SUPPLY

Auxiliary voltage (Vx)

Three ordering options:
(i) Vx: 24 to 48 Vdc
(ii) Vx: 48 to 110 Vdc, and 40 to 100 Vac (rms)
(iii) Vx: 110 to 250 Vdc, and 100 to 240 Vac (rms)

Operating range

(i) 19 to 65 V (dc only for this variant)
(ii) 37 to 150 V (dc), 32 to 110 V (ac)
(iii) 87 to 300 V (dc), 80 to 265 V (ac).
With a tolerable ac ripple of up to 12% for a dc supply, per IEC 60255-11: 1979.

Nominal burden

Quiescent burden: 11 W or 24 VA. (Extra 1.25 W when fitted with second rear communications board).
Additions for energized binary inputs/outputs:

Per opto input:	0.09 W (24 to 54 V), 0.12 W (110/125 V), 0.19 W (220/250 V).

Per energized output relay: 0.13 W

Power-up time

Time to power up < 11 s.

Power supply interruption

3 power supply options:
(i) Vx: 24 to 48 V dc
(ii) Vx: 48 to 110 V dc, 40 to 100 V ac (rms)
(iii) (i) Vx: 110 to 250 V dc, 100 to 240 V ac (rms)
Per IEC 60255-11: 2008
The relay will withstand a 100% interruption in the DC supply without de-energizing as follows:

(i) Vx: 24 to 48 V dc

Quescent / half load:	20 ms at 24 V 50 ms at 36 V 100 ms at 48 V
Maximum loading:	20 ms at 24 V 50 ms at 36 V 100 ms at 48 V

(ii) Vx: 48 to 110 V dc

Quescent / half load:	20 ms at 36 V 50 ms at 60 V 100 ms at 72 V 200 ms at 110 V
Maximum loading:	20 ms at 36 V 50 ms at 60 V 100 ms at 85 V 200 ms at 110 V

(iii) (i) Vx: 110 to 250 V dc

Quescent / half load:	50 ms at 110 V 100 ms at 160 V 200 ms at 210 V
Maximum loading:	20 ms at 85 V 50 ms at 98 V 100 ms at 135 V 200 ms at 174 V

Per IEC 60255-11: 2008:

The relay will withstand an interruption in the AC supply without de-energizing as follows:

(ii) Vx = 40 to 100 V ac

Quescent / half load
50 ms at 27 V for 100% voltage dip
Maximum loading:
10 ms at 27 V for 100% voltage dip

(iii) Vx = 100 to 240 V ac

Quescent / half load
50 ms at 80 V for 100% voltage dip
Maximum loading:
50 ms at 80 V for 100% voltage dip

Maximum loading = all digital inputs/outputs energized
Quescent or 1/2 loading = 1/2 of all digital inputs/outputs energized

Battery backup

Front panel mounted
Type ½ AA, 3.6 V Lithium Thionyl Chloride Battery (SAFT advanced battery reference LS14250)
Battery life (assuming relay energized for 90% time) >10 years

Field voltage output

Regulated 48 Vdc
Current limited at 112 mA maximum output
Operating range 40 to 60 V

Digital ("Opto") inputs

Universal opto inputs with programmable voltage thresholds (24/27, 30/34, 48/54, 110/125, 220/220 V).
May be energized from the 48 V field voltage, or the external battery supply.
Rated nominal voltage: 24 to 250 Vdc
Operating range: 19 to 265 Vdc
Withstand: 300 Vdc, 300 Vrms.
Nominal pick-up and reset thresholds:
Nominal battery 24/27: 60 - 80% DO/PU
(logic 0) <16.2 (logic 1) >19.2
Nominal battery 24/27: 50 - 70% DO/PU
(logic 0) <12.0 (logic 1) >16.8
Nominal battery 30/34: 60 - 80% DO/PU
(logic 0) <20.4 (logic 1) >24.0
Nominal battery 30/34: 50 - 70% DO/PU
(logic 0) <15.0 (logic 1) >21.0
Nominal battery 48/54: 60 - 80% DO/PU
(logic 0) <32.4 (logic 1) >38.4
Nominal battery 48/54: 50 - 70% DO/PU
(logic 0) <24.0 (logic 1) >33.6
Nominal battery 110/125: 60 - 80% DO/PU
(logic 0) <75.0 (logic 1) >88.0
Nominal battery 110/125: 50 - 70% DO/PU
(logic 0) <55.0 (logic 1) >77.0
Nominal battery 220/250: 60 - 80% DO/PU
(logic 0) <150.0 (logic 1) >176.0
Nominal battery 220/250: 50 - 70% DO/PU
(logic 0) <110 (logic 1) >154
Recognition time:
<2 ms with long filter removed,
<12 ms with half cycle ac immunity filter on

OUTPUT CONTACTS

Standard Contacts

General purpose relay outputs for signaling, tripping and alarming:

Continuous Carry Ratings (Not Switched):

Maximum continuous current: 10 A (UL: 8 A)

Short duration withstand carry: 30 A for 3 s
250 A for 30 ms

Rated voltage: 300 V

Make & Break Capacity:

DC: 50 W resistive
DC: 62.5 W inductive (L/R = 50 ms)
AC: 2500 VA resistive (cos ϕ = unity)
AC: 2500 VA inductive (cos ϕ = 0.7)

Make, Carry:

30 A for 3 secs, dc resistive, 10,000 operations (subject to the above limits of make / break capacity and rated voltage)

Make, Carry & Break:

30 A for 200 ms, ac resistive, 2,000 operations (subject to the above limits of make / break capacity & rated voltage)
4 A for 1.5 secs, dc resistive, 10,000 operations (subject to the above limits of make / break capacity & rated voltage)
0.5 A for 1 sec, dc inductive, 10,000 operations (subject to the above limits of make / break capacity & rated voltage)
10 A for 1.5 secs, ac resistive / inductive, 10,000 operations (subject to the above limits of make / break capacity & rated voltage)

Durability:

Loaded contact: 10 000 operations minimum,
Unloaded contact: 100 000 operations minimum.

Operate Time Less than 5 ms
Reset Time Less than 5 ms

High Break Contacts

Continuous Carry Ratings (Not Switched):

Maximum continuous current: 10 A

Short duration withstand carry: 30 A for 3 s
250 A for 30 ms

Rated voltage: 300 V

Make & Break Capacity:

DC: 7500 W resistive
DC: 2500 W inductive (L/R = 50 ms)

Make, Carry:

30 A for 3 secs, dc resistive, 10,000 operations (subject to the above limits of make / break capacity & rated voltage)

Make, Carry & Break:

30 A for 3 secs, dc resistive, 5,000 operations (subject to the above limits of make / break capacity & rated voltage)
30 A for 200 ms, dc resistive, 10,000 operations (subject to the above limits of make / break capacity & rated voltage)
10 A (*), dc inductive, 10,000 operations (subject to the above limits of make / break capacity & rated voltage)

*Typical for repetitive shots – 2 minutes idle for thermal dissipation

Voltage	Current	L/R	No of shots in 1 sec
65 V	10 A	40 ms	5
150 V	10 A	40 ms	4
250 V	10 A	40 ms	2
250 V	10 A	20 ms	4

MOV protection: Max Voltage 330 V dc

Durability:

Loaded contact: 10 000 operations minimum,
Unloaded contact: 100 000 operations minimum.

Operate Time: Less than 0.2 ms
Reset Time: Less than 8 ms

Watchdog Contacts

Non-programmable contacts for relay healthy/relay fail indication:

Breaking capacity:

DC: 30 W resistive
DC: 15 W inductive (L/R = 40 ms)
AC: 375 VA inductive (cos ϕ = 0.7)

IRIG-B Interface (Modulated)

External clock synchronization per IRIG standard 200-98, format B12x

Input impedance 6 kΩ at 1000 Hz

Modulation ratio: 3:1 to 6:1

Input signal, peak-peak: 200 mV to 20 V

IRIG-B 00X Interface (Demodulated)

External clock synchronization per IRIG standard 200-98, format B00X.

Input signal TTL level

Input impedance at dc 10 kΩ

ENVIRONMENTAL CONDITIONS

Ambient Temperature Range

Per IEC 60255-6: 1988:

Operating temperature range:

-25°C to +55°C (or -13°F to +131°F)

Storage and transit:

-25°C to +70°C (or -13°F to +158°F)

Tested as per

IEC 60068-2-1: 2007

-25°C storage (96 hours)

-40°C operation (96 hours)

IEC 60068-2-2: 2007

+85°C storage (96 hours)

+85°C operation (96 hours)

Ambient Humidity Range

Per IEC 60068-2-3: 1969:

56 days at 93% relative humidity and +40 °C

Per IEC 60068-2-30: 1980

Damp heat cyclic, six (12 + 12) hour cycles, 93% RH, +25 to +55 °C

Corrosive Environments

(For relays with harsh environment coating of PCBs)

Per IEC 60068-2-60: 1995, Part 2, Test Ke, Method (class) 3 - Industrial corrosive environment/poor environmental control, mixed gas flow test.

21 days at 75% relative humidity and +25°C exposure to elevated concentrations of H_2S (100 ppb), NO_2 (200 ppb), Cl_2 (20 ppb).

Per IEC 60068-2-52 Salt mist

(7 days)

Per IEC 60068-2-43 for H_2S

(21 days), 15 ppm

Per IEC 60068-2-42 for SO_2

(21 days), 25 ppm

TYPE TESTS

Insulation

Per IEC 60255-27: 2005

Insulation resistance > 100 MΩ at 500 Vdc

(Using only electronic/brushless insulation tester).

Creepage Distances and Clearances

IEC 60255-27: 2005

Pollution degree 3,

Overvoltage category III,

Impulse test voltage 5 kV.

High Voltage (Dielectric) Withstand

(i) Per IEC 60255-27: 2005, 2 kV rms

AC, 1 minute:

Between all independent circuits.

Between independent circuits and protective (earth) conductor terminal.

1 kV rms AC for 1 minute, across open watchdog contacts.

1 kV rms AC for 1 minute, across open contacts of changeover output relays.

1 kV rms AC for 1 minute for all D-type EIA(RS)232/EIA(RS)485 ports between the communications port terminals and protective (earth) conductor terminal.

(ii) Per ANSI/IEEE C37.90-1989 (reaffirmed 1994):

1.5 kV rms AC for 1 minute, across open contacts of normally open output relays.

1 kV rms AC for 1 minute, across open watchdog contacts.

1 kV rms AC for 1 minute, across open contacts of changeover output relays.

Impulse Voltage Withstand Test

Per IEC 60255-27: 2005

Front time: 1.2 µs, Time to half-value: 50 µs,

Peak value: 5 kV, 0.5 J

Between all independent circuits.

Between all independent circuits and protective (earth) conductor terminal.

Between the terminals of independent circuits.

EIA(RS)232 & EIA(RS)485 ports and normally open contacts of output relays excepted.

ELECTROMAGNETIC COMPATIBILITY (EMC)

1 MHz Burst High Frequency Disturbance Test

Per IEC 60255-22-1: 1988, Class III,
Common-mode test voltage: 2.5 kV,
Differential test voltage: 1.0 kV,
Test duration: 2 s, Source impedance: 200 Ω
(EIA(RS)232 ports excepted).

100 kHz Damped Oscillatory Test

Per EN61000-4-18: 2007: Level 3
Common mode test voltage: 2.5 kV
Differential mode test voltage: 1 kV

Immunity to Electrostatic Discharge

Per IEC 60255-22-2: 1996, Class 4,
15 kV discharge in air to user interface, display, communication port and exposed metalwork.
6 kV point contact discharge to any part of the front of the product.

Electrical Fast Transient or Burst Requirements

Per IEC 60255-22-4: 2002 and
EN61000-4-4:2004. Test severity Class III and IV:
Amplitude: 2 kV, burst frequency 5 kHz
(Class III),
Amplitude: 4 kV, burst frequency 2.5 kHz (Class IV).
Applied directly to auxiliary supply, and applied to all other inputs. (EIA(RS)232 ports excepted).
Amplitude: 4 kV, burst frequency 5 kHz
(Class IV) applied directly to auxiliary.

Surge Withstand Capability

Per IEEE/ANSI C37.90.1: 2002:
4 kV fast transient and 2.5 kV oscillatory applied directly across each output contact, optically isolated input, and power supply circuit.
4 kV fast transient and 2.5 kV oscillatory applied common mode to communications, IRIG-B.

Surge immunity test

(EIA(RS)232 ports excepted).
Per IEC 61000-4-5: 2005 Level 4,
Time to half-value: 1.2 / 50 µs,
Amplitude: 4 kV between all groups and protective (earth) conductor terminal.
Amplitude: 2 kV between terminals of each group.

Immunity to Radiated Electromagnetic Energy

Per IEC 60255-22-3: 2000, Class III:
Test field strength, frequency band 80 to 1000 MHz:
10 V/m,
Test using AM: 1 kHz / 80%,
Spot tests at 80, 160, 450, 900 MHz
Per IEEE/ANSI C37.90.2: 2004:
80 MHz to 1000 MHz, 1 kHz 80% AM and AM pulsed modulated.
Field strength of 35 V/m.

Radiated Immunity from Digital Communications

Per EN61000-4-3: 2002, Level 4:
Test field strength, frequency band 800 to 960 MHz, and 1.4 to 2.0 GHz:
30 V/m,
Test using AM: 1 kHz/80%.
Radiated Immunity from Digital Radio Telephones
Per IEC 61000-4-3: 2002:
10 V/m, 900 MHz and 1.89 GHz.

Immunity to Conducted Disturbances Induced by Radio Frequency Fields

Per IEC 61000-4-6: 1996, Level 3,
Disturbing test voltage: 10 V.

Power Frequency Magnetic Field Immunity

Per IEC 61000-4-8: 1994, Level 5,
100 A/m applied continuously,
1000 A/m applied for 3 s.
Per IEC 61000-4-9: 1993, Level 5,
1000 A/m applied in all planes.
Per IEC 61000-4-10: 1993, Level 5,
100 A/m applied in all planes at 100 kHz/
1 MHz with a burst duration of 2 s.

Conducted Emissions

Per EN 55022: 1998 Class A:
0.15 - 0.5 MHz, 79 dBµV (quasi peak)
66 dBµV (average)
0.5 - 30 MHz, 73 dBµV (quasi peak)
60 dBµV (average).

Radiated Emissions

Per EN 55022: 1998 Class A:
30 - 230 MHz, 40 d BµV/m at 10 m measurement distance
230 - 1 GHz, 47 dBµV/m at 10 m measurement distance.

EU DIRECTIVES

EMC compliance

Per 2004/108/EC:
Compliance to the European Commission Directive on EMC is demonstrated using a Technical File. Product Specific Standards were used to establish conformity:

EN50263: 2000

Product safety

Per 2006/95/EC:
Compliance to the European Commission Low Voltage Directive. (LVD) is demonstrated using a Technical File.
A product specific standard was used to establish conformity.

EN 60255-27: 2005

R&TTE compliance

Radio and Telecommunications Terminal Equipment (R & TTE) directive 99/5/EC.
Compliance demonstrated by compliance to both the EMC directive and the Low voltage directive, down to zero volts.
Applicable to rear communications ports.

ATEX compliance

ATEX Potentially Explosive Atmospheres directive 94/9/EC, for equipment.
The equipment is compliant with Article 1(2) of European directive 94/9/EC.
It is approved for operation outside an ATEX hazardous area. It is however approved for connection to Increased Safety, “Ex e”, motors with rated ATEX protection, Equipment Category 2, to ensure their safe operation in gas Zones 1 and 2 hazardous areas.

Caution	**Equipment with this marking is not itself suitable for operation within a potentially explosive atmosphere.**

Compliance demonstrated by Notified Body certificates of compliance.

II (2) G

MECHANICAL ROBUSTNESS

Vibration test

Per IEC 60255-21-1: 1996:

Response Class 2
Endurance Class 2

Shock and bump

Per IEC 60255-21-2: 1996:

Shock response Class 2
Shock withstand Class 1
Bump Class 1

Seismic test
Per IEC 60255-21-3: 1995: Class 2

THIRD PARTY COMPLIANCES

Underwriters laboratory (UL)

File Number: E202519
Original Issue Date: 05-10-2002
(Complies with Canadian and US requirements).

Energy Networks Association (ENA)

Certificate Number: 104 Issue 2
Assessment Date: 16-04-2004

PROTECTION FUNCTIONS

Reverse/Low Forward/Overpower

Accuracy

Pick-up: Setting ±10%
Reverse/Over Power Drop-off:
0.95 of setting ±10%
Low forward power Drop-off:
1.05 of setting ±10%
Angle variation Pick-up:
Expected pick-up angle ±2 degree
Angle variation Drop-off:
Expected drop-off angle ±2.5 degree
Operating time: ±2% or 50 ms whichever is greater
Repeatability: <5%
Disengagement time: <50 ms
tRESET: ±5%
Instantaneous operating time: <50 ms

Sensitive/Low Forward/Overpower

Accuracy

Pick-up: Setting ±10%
Reverse/Over power Drop-off: 0.9 of setting ±10%
Low forward power Drop-off:
1.1 of Setting ±10%
Angle variation Pick-up:
Expected pick-up angle ±2 degree
Angle variation Drop-off:
Expected drop-off angle ±2.5% degree
Operating time: ±2% or 50 ms whichever is greater
Repeatability: <5%
Disengagement time: <50 ms
tRESET: ±5%
Instantaneous operating time: <50 ms

Directional/Non-Directional Overcurrent

Accuracy

Pick-up: Setting ±5%
Drop-off: 0.95 x Setting ±5%
Minimum trip level (IDMT): 1.05 x Setting ±5%
IDMT characteristic shape: ±5% or 40 ms whichever is greater*
IEEE reset: ±5% or 50 ms whichever is greater
DT operation: ±2% or 50 ms whichever is greater
DT Reset: ±5%
Directional accuracy (RCA ±90°): ±2° hysteresis 2°
Characteristic UK: IEC 6025-3…1998
Characteristic US: IEEEC37.112…1996
* Under reference conditions

Negative Phase Sequence Overcurrent

Accuracy

I2>Pick-up: Setting ±5%
I2> Drop-off: 0.95 x Setting ±5%
Vpol Pick-up: Setting ±5%
Vpol Drop-off: 0.95 x Setting ±5%
DT operation: ±2% or 60 ms whichever is greater
Disengagement time: <35 ms
Directional accuracy (RCA ±90°): ±2° hysteresis <1%
Repeatability (operating times): <10 ms

Thermal Overload

Accuracy

Setting accuracy: ±5%
Reset: 95% of thermal setting ±5%
Thermal alarm Pick-up: Calculated trip time ±5%
Thermal overload Pick-up: Calculated trip time ±5%
Cooling time accuracy: ±6% of theoretical
Repeatability: <2.5%

Directional/Non-Directional Earth Fault

Earth fault accuracy

Pick-up: Setting ±5%
Drop-off: >0.85 x Setting ±5%
IDMT trip level elements: 1.05 x Setting ±5%
IDMT characteristic shape: ±5% or 40 ms whichever is greater*
IEEE reset: ±5% or 40 ms whichever is greater
DT operation: ±2% or 50 ms whichever is greater
DT reset: ±5%
Repeatability: 5%

SEF accuracy

Pick-up: Setting ±5%
Drop-off: 0.95 x Setting ±5%
IDMT trip level elements: 1.05 x Setting ±5%
IDMT characteristic shape: ±5% or 40 ms whichever is greater*
IEEE reset: ±7.5% or 60 ms whichever is greater
DT operation: ±2% or 50 ms whichever is greater
DT reset: ±5%
Repeatability: 5%

Wattmetric SEF accuracy

P = 0 W Pick-up: ISEF> ±5%
P > 0 W Pick-up: P> ±5%
P = 0 W Drop-off: (0.95 x ISEF>) ±5%
P > 0 W Drop-off: 0.9 x P> ±5%
Boundary accuracy: ±5% with 1° hysteresis
Repeatability: 5%

Zero sequence polarizing quantities accuracy
Operating boundary Pick-up: ±2° of RCA ±90°
Hysteresis: <3°
Vnpol Pick-up: Setting ±10%
Vnpol Drop-off: 0.9 x Setting or 0.7 V (whichever is greater) ±10%

Negative sequence polarizing quantities accuracy
Operating boundary Pick-up: ±2° of RCA ±90°
Hysteresis: <3°
V2pol Pick-up: Setting ±10%
V2pol Drop-off: 0.9 x Setting or 0.7 V (whichever is greater) ±10%
I2pol Pick-up: Setting ±10%
I2pol Drop-off: 0.9 x Setting ±10%

Restricted Earth Fault

Accuracy
Pick-up: Setting formula ±5%
Drop-off: 0.80 (or better) of calculated differential current
High impedance Pick-up: Setting ±5%
High impedance operating time: <30 ms

Transient Overreach and Overshoot

Accuracy
Additional tolerance X/R ratios:
±5% over the X/R ratio of 1…90
Overshoot of overcurrent elements: <40 ms
Disengagement time: <60 ms (65 ms SEF)

Neutral Displacement/Residual Overvoltage

Accuracy
DT/IDMT Pick-up: Setting ±5%
Drop-off: 0.95 x Setting ±5%
IDMT characteristic shape:
±5% or 55 ms whichever is greater
DT operation: ±2% or 55 ms whichever is greater
Instantaneous operation <55 ms
Reset: <35 ms
Repeatability: <1%

Rate of Change of Frequency 'df/dt'

Accuracy
Fixed Window
Pick-up: Setting ±0.05 Hz/s or ±3% whichever is greater
Repeatability: <5%

Rolling Window
Pick-up: Setting ±0.01 Hz/s or ±3% whichever is greater
Repeatability: <5% Freq Low, Freq High
Pick-up: Setting ±2% or ±0.08 Hz whichever is greater

DT Operation
Fixed Window
Setting ±2% or ±(40+20*X*Y)ms
Repeatability: <5%

Rolling Window
Setting ±2% or ±(60+20*X+5*Y)ms

Note	*X = average cycles, Y = Iterations*

Repeatability: <20%

df/dt

Accuracy
Pick-up: Setting ±0.5 Hz/s
Operating time: ±2% or 160 ms whichever is greater
Lower/Upper dead band operating time:
±2% or 160 ms whichever is greater
Operation over dead band:
±2% or 170 ms whichever is greater
Repeatability: <5%

Voltage Vector Shift

Accuracy
Pick-up: Setting ±0.5°
Trip pulse time: 500 ms ±2%

Reconnect Delay

Accuracy
Operating time: ±2% or 50 ms whichever is greater

Undervoltage

Accuracy
DT Pick-up: Setting ±5%
IDMT Pick-up: 0.95 x Setting ±5%
Drop-off: 1.05 x Setting ±5%
IDMT characteristic shape:
±2% or 50 ms whichever is greater
DT operation: ±2% or 50 ms whichever is greater
Reset: <7 ms
Repeatability: <1%

Overvoltage

Accuracy

DT Pick-up: Setting ±5%
IDMT Pick-up: Setting ±5%
Drop-off: 0.98 x Setting ±5%
IDMT characteristic shape:
±2% or 50 ms whichever is greater
DT operation: ±2% or 50 ms whichever is greater
Reset: <75 ms

NPS Overvoltage

Accuracy

Pick-up: Setting ±5%
Drop-off: 0.95 x Setting ±5%
Repeatability (operating threshold): <1%
DT operation: ±2% or 65 ms whichever is greater
Instantaneous operation: <60 ms
Instantaneous operation: (accelerated): <45 ms
Disengagement time: <35 ms
Repeatability (operating times): <10 ms

Underfrequency

Accuracy

Pick-up: Setting ±0.01 Hz
Drop-off: (Setting +0.025 HZ) ±0.01 Hz
DT operation: ±2% or 50 ms whichever is greater*
* The operating will also include a time for the relay to frequency track 20 Hz/ second).

Overfrequency

Accuracy

Pick-up: Setting ±0.01 Hz
Drop-off: (Setting -0.025 Hz) ±0.01 Hz
DT operation: ±2% or 50 ms whichever is greater *
* The operating will also include a time for the relay to frequency track 20 Hz/ second).

CB Fail

Timer accuracy

Timers: ±2% or 40 ms whichever is greater
Reset time: <30 ms

Undercurrent accuracy

Pick-up: ±10%
Operating time: < 12 ms (Typical <10 ms)
Reset: < 15 ms (Typical < 10 ms)

SUPERVISORY FUNCTIONS

Voltage Transformer Supervision

Accuracy

Fast block operation: <25 ms
Fast block reset: <30 ms
Time delay: Setting ±2% or
20 ms whichever is greater

Current Transformer Supervision

Accuracy

IN > Pick-up: Setting ±5%
VN < Pick-up: Setting ±5%
IN > Drop-off: 0.9 x Setting ±5%
VN < Drop-off: (1.05 x Setting) ±5% or
1 V whichever is greater
CTS block operation: < 1 cycle
CTS reset: < 35 ms

System Checks

Voltage Monitors

Accuracy

Gen/Bus Voltage Monitors

Over/Live/Diff voltage:

Pick-up: setting ±3% or
0.1 V whichever is greater
Drop-off: (0.98 x Setting) ±3% or
0.1 V whichever is greater
Repeatability: <1%

Bus Under/Dead voltage:

Pick-up: Setting ±3% or
0.1 V whichever is greater
Drop-off: (1.02 x Setting) ±3% or
0.1 V whichever is greater
Repeatability: <1%

Generator underfrequency

Pick-up: Setting ±0.01 Hz
Drop-off: (Setting +0.1 Hz) ±0.01 Hz
Repeatability: <1%

Generator overfrequency

Pick-up: Setting ±0.01 Hz
Drop-off: (Setting -0.1 Hz) ±0.01 Hz
Repeatability: <1%

Check Synch

Accuracy

CS1

CS1 Phase Angle:
Pick-up: (Setting-2°) ±1°
Drop-off: (Setting-1°) ±1°
Repeatability: <1%

CS1 Slip Freq:
Pick-up: Setting ±0.01 Hz
Drop-off: (0.95 x Setting) ±0.01 Hz
Repeatability: <1%

CS1 Slip Timer:
Timers: setting ±1% or 40 ms whichever is greater
Reset time: < 30 ms
Repeatability: <10ms

CS2

CS2 Phase Angle:
Pick-up: (Setting-2°) ±1°
Drop-off: (Setting-1°) ±1°
Repeatability: <1%

CS2 Slip Freq:
Pick-up: Setting ±0.01 Hz
Drop-off: (0.95 x Setting) ±0.01 Hz
Repeatability: <1%

CS2 Slip Timer:
Timer: setting ±1% or 40 ms whichever is greater
Reset time: < 30 ms
Repeatability: <1%

CS2 Advanced CB Compensation Phase Angle:
Pick-up: 0°±1°
Drop-off: 2°±1°
Repeatability: <1%

CS2 CB Closing Timer
Timer: <30 ms
Repeatability: <10 ms

System Split

Accuracy

SS Phase Angle:
Pick-up: (Setting+2°) ±1°
Drop-off: (Setting+1°) ±1°
Repeatability: <1%

SS Undervoltage:
Pick-up: Setting ±3%
Drop-off: 1.02 x Setting
Repeatability: <1%

SS Timer:
Timers: setting ±1% or 40 ms whichever is greater
Reset time: <30 ms
Repeatability: <10 ms

PLANT SUPERVISION

CB State Monitoring Control and Condition Monitoring

Accuracy
Timers: ±2% or 20 ms whichever is greater
Broken current accuracy: ±5%

Dynamic Rating

Accuracy
DLR I> Pick-up: Setting ±2%
DLR I> Drop-off: (0.7 to 0.99) x Setting ±2%
DT operation: ±2% or 2 s whichever is greater
Instantaneous operation: <2 s
Disengagement time: <1 s
Repeatability (operating times): <2 s Repeatability (PU and DO): <3%

Programmable Scheme Logic

Accuracy
Output conditioner timer:
Setting ±2% or 50 ms whichever is greater
Dwell conditioner timer:
Setting ±2% or 50 ms whichever is greater
Pulse conditioner timer:
Setting ±2% or 50 ms whichever is greater

MEASUREMENTS AND RECORDING FACILITIES

Measurements

Accuracy

Current: 0.05…3 In: ±1% of reading
Voltage: 0.05…2 Vn: ±5% of reading
Power (W): 0.2…2 Vn, 0.05…3
In: ±5% of reading at unity power factor
Reactive Power (VArs): 0.2…2 Vn, 0.05…3
In: ±5% of reading at zero power factor
Apparent Power (VA): 0.2…2 Vn, 0.05…3
In: ±5% of reading
Energy (Wh): 0.2…2 Vn, 0.2…3
In: ±5% of reading at zero power factor
Energy (Varh): 0.2…2 Vn, 0.2…3
In: ±5% of reading at zero power factor
Phase accuracy: 0°…360: ±5%
Frequency: 40…70 Hz: ±0.025 Hz

IRIG-B and Real Time Clock

Performance

Year 2000: Compliant
Real time accuracy: < ±1 second / day

Features

Real time 24 hour clock settable in hours, minutes and seconds
Calendar settable from January 1994 to December 2092
Clock and calendar maintained via battery after loss of auxiliary supply
Internal clock synchronization using IRIG-B Interface for IRIG-B signal is BNC

Current Loop Input and Outputs

Accuracy

Current loop input accuracy: ±1% of full scale
CLI drop-off threshold Under: setting ±1% of full scale
CLI drop-off threshold Over: setting ±1% of full scale
CLI sampling interval: 50 ms
CLI instantaneous operating time: < 250 ms
CLI DT operating time: ±2% setting or 200 ms whichever is the greater
CLO conversion interval: 5 ms
CLO latency: < 1.07 s or <70 ms depending on CLO output parameter's internal refresh rate - (1 s or 0.5 cycle)
Current loop output accuracy: ±0.5% of full scale
Repeatability: <5%

Note	*CLI - Current Loop Input* *CLO - Current Loop Output*

Other Specifications

CLI load resistance 0-1 mA: < 4 kΩ
CLI load resistance 0-1 mA/0-20 mA/4 20 mA: <300 Ω
Isolation between common input channels: zero
Isolation between input channels and case earth/other circuits: 2 kV rms for 1 minute
CLO compliance voltage 0-1 mA/0 10 mA: 10 V
CLO compliance voltage 0-20 mA/4 20 mA: 8.8 V
Isolation between common output channels: zero
Isolation between output channels and case earth/other circuits: 2 kV rms for 1 minute

Disturbance Records

Accuracy

Magnitude and relative phases: ±5% of applied quantities
Duration: ±2%
Trigger Position: ±2% (minimum 100 ms)
Record length:
50 records each 1.5 s duration (75 s total memory) with 8 analogue channels and 32 digital channels (Courier, MODBUS, DNP 3.0, IEC 61850),
8 records each 3 s (50 Hz) or 2.5 s (60 Hz) duration (IEC 60870-5-103).

Event, Fault & Maintenance Records

Maximum 512 events in a cyclic memory
Maximum 5 fault records
Maximum 10 maintenance records

Accuracy

Event time stamp resolution 1 ms

IEC 61850 Ethernet Data

100 Base FX Interface

Transmitter optical characteristics
(TA = 0°C to 70°C, VCC = 4.75 V to 5.25 V)

Parameter	Sym	Min.	Typ.	Max.	Unit
Output Optical Power BOL 62.5/125 µm, NA = 0.275 Fiber EOL	PO	-19 -20	-16.8	-14	dBm avg.
Output Optical Power BOL 50/125 µm, NA = 0.20 Fiber EOL	PO	-22.5 -23.5	-20.3	-14	dBm avg.
Optical Extinction Ratio				10 -10	% dB
Output Optical Power at Logic "0" State	PO ("0")			-45	dBm avg.

Note	*BOL - Beginning of life* *EOL - End of life*

Receiver optical characteristics
(TA = 0°C to 70°C, VCC = 4.75 V to 5.25 V)

Parameter	Sym	Min.	Typ.	Max.	Unit
Input Optical Power Minimum at Window Edge	PIN Min. (W)		-33.5	–31	dBm avg.
Input Optical Power Minimum at Eye Center	PIN Min. (C)		-34.5	-31.8	Bm avg.
Input Optical Power Maximum	PIN Max.	-14	-11.8		dBm avg.

Note	*The 10BaseFL connection will no longer be supported as IEC 61850 does not specify this interface*

SETTINGS, MEASUREMENTS AND RECORDS LIST

Settings List

Global Settings (System Data)

Language: English/French/German/Spanish
Frequency: 50/60 Hz

Circuit Breaker Control (CB Control):

CB Control by: Disabled
Local
Remote
Local+Remote
Opto
Opto+local
Opto+Remote
Opto+Rem+local
Close Pulse Time: 0.10...10.00 s
Trip Pulse Time: 0.10…5.00 s
Man Close t max: 0.01…9999.00 s
Man Close Delay: 0.01…600.00 s
CB Healthy Time: 0.01…9999.00 s
Check Sync. Time: 0.01...9999.00 s
Reset Lockout by: User Interface/CB Close
Man Close RstDly: 0.10...600.00 s
CB Status Input: None
52A
52B
52A & 52B

Date and Time

IRIG-B Sync: Disabled/Enabled
Battery Alarm: Disabled/Enabled
LocalTime Enable: Disabled/Fixed/Flexible
LocalTime Offset: -720 min…720 min
DST Enable: Disabled/Enabled
DST Offset: 30 min…60 min
DST Start: First/Second/
Third/Fourth/Last
DST Start Day: Sun/Mon/Tues/Wed/
Thurs/Fri/Sat
DST Start Month: Jan/Feb/Mar/Apr/May/Jun/
Jul/Aug/Sept/Oct/Nov/Dec
DST Start Mins: 0 min…1425 min
DST End: First/Second/
Third/Fourth/Last
DST End Day: Sun/Mon/Tues/Wed/
Thurs/Fri/Sat
DST End Month: Jan/Feb/Mar/Apr/May/Jun/
Jul/Aug/Sept/Oct/Nov/Dec
DST End Mins: 0 min…1425 min
RP1 Time Zone: UTC/Local
RP2 Time Zone: UTC/Local
Tunnel Time Zone: UTC/Local

Configuration

Setting Group: Select via Menu

	Select via PSL
Active Settings:	Group 1/2/3/4
Setting Group 1:	Disabled/Enabled
Setting Group 2:	Disabled/Enabled
Setting Group 3:	Disabled/Enabled
Setting Group 4:	Disabled/Enabled
System Config:	Invisible/Visible
Power:	Disabled/Enabled
Overcurrent:	Disabled/Enabled
Thermal Overload:	Disabled/Enabled
Earth Fault:	Disabled/Enabled
SEF/REF/Spower:	Disabled or SEF/REF or Sensitive Power
Residual O/V NVD:	Disabled/Enabled
df/dt:	Disabled/Enabled
V Vector Shift:	Disabled/Enabled
Reconnect Delay:	Disabled/Enabled
Volt Protection:	Disabled/Enabled
Freq Protection:	Disabled/Enabled
CB Fail:	Disabled/Enabled
Supervision:	Disabled/Enabled
Dynamic Rating	Disabled/Enabled
Input Labels:	Invisible/Visible
Output Labels:	Invisible/Visible
CT & VT Ratios:	Invisible/Visible
Event Recorder:	Invisible/Visible
Disturb Recorder:	Invisible/Visible
Measure't Setup:	Invisible/Visible
Comms Settings:	Invisible/Visible
Commission Tests:	Invisible/Visible
Setting Values:	Primary/Secondary
Control Inputs:	Invisible/Visible
CLIO Inputs:	Disabled/Enabled
CLIO Outputs:	Disabled/Enabled
System Checks	Disabled/Enabled
Ctrl I/P Config:	Invisible/Visible
Ctrl I/P Labels:	Invisible/Visible
Direct Access:	Disabled/Enabled
IEC GOOSE	Invisible/Visible
RP1 Read Only	Disabled/Enabled
RP2 Read Only	Disabled/Enabled
NIC Read Only	Disabled/Enabled
LCD Contrast:	0…31

CT and VT Ratios

Main VT Primary:	100...1000000 V
Main VT Sec'y:	80...140 (100/120 V) 320…560 V (380/480 V)
C/S VT Primary:	100 V…1 MV
C/S VT Secondary:	80…140 V
VN VT Primary (P342/3):	100…1000000 V
VN VT Secondary (P342/3):	80…140 V (100/120 V) 320…560 V (380/480 V)
PH CT Polarity:	Standard, Inverted
Phase CT Primary:	1 A…50 kA
Phase CT Sec'y Sec'y :	1 A/5 A
ISen CT Polarity:	Standard/Inverted
ISen CT Primary:	1 A…60 KA
ISen CT Sec'y:	1 A/5 A

Sequence of Event Recorder (Record Control)

Alarm Event:	Disabled/Enabled
Relay O/P Event:	Disabled/Enabled
Opto Input Event:	Disabled/Enabled
General Event:	Disabled/Enabled
Fault Rec Event:	Disabled/Enabled
Maint Rec Event:	Disabled/Enabled
Protection Event:	Disabled/Enabled
DDB 31 - 0:	(up to):
DDB 2047 - 2016:	

Binary function link strings, selecting which DDB signals will be stored as events, and which will be filtered out.

Oscillography (Disturbance Recorder)

Duration:	0.10…10.50 s
Trigger Position:	0.0…100.0%
Trigger Mode:	Single/Extended
Analog Channel 1:	(up to):
Analog Channel 8:	

Disturbance channels selected from:
IA/IB/IC/VA/VB/VC/VN/ISensitive/Frequency
V Checksync

Digital Input 1:	(up to):
Digital Input 32:	

Selected binary channel assignment from any DDB status point within the relay (opto input, output contact, alarms, starts, trips, controls, logic…).

Input 1 Trigger:	(up to):
Input 32 Trigger:	No Trigger/ Trigger/ LH (Low to High)/ Trigger H/L (High to Low)

Measured Operating Data (Measure't Setup)

Default Display:	Access Level 3Ph + N Current 3Ph Voltage Power Date and Time Description Plant Reference Frequency
Local Values:	Primary/Secondary
Remote Values:	Primary/Secondary
Measurement Ref:	VA/VB/VC/IA/IB/IC
Measurement Mode:	0/1/2/3
Fix Dem Period:	1…99 mins
Roll Sub Period:	1…99 mins
Num Sub Periods:	1…15
Remote2 Values:	Primary/Secondary

Communications

RP1 Address:	(Courier or IEC 870-5-103): 0…255
RP1 Address:	*(DNP3.0):* 0…65534
RP1 Address:	*(MODBUS):* 1…247
RP1 InactivTimer:	1…30 mins
RP1 Baud Rate:	*(IEC 870-5-103):* 9600/19200 bits/s
RP1 Baud Rate:	(MODBUS, Courier): 9600/19200/38400 bits/s
RP1 Baud Rate:	*(DNP3.0):* 1200/2400/4800/ 9600/19200/38400 bits/s
RP1 Parity:	*(MODBUS, DNP3.0)* Odd/Even/None
RP1 Meas Period:	1…60 s (IEC 870-5-103)
RP1 PhysicalLink:	Copper (EIA(RS)485/K bus) or Fiber Optic
RP1 Time Sync:	Disabled/Enabled
MODBUS IEC Timer:	Standard/Reverse
RP1 CS103Blocking:	Disabled Monitor Blocking Command Blocking
RP1 Port Config:	*(Courier):* K Bus EIA485 (RS485)
RP1 Comms Mode:	*(Courier):* IEC 60870 FT1.2 IEC 60870 10-Bit No parity

Note	*If RP1 Port Config is K Bus the baud rate is fixed at 64 kbits/s*

Optional Ethernet Port

NIC Tunl Timeout:	1...30 mins
NIC Link Report:	Alarm, Event, None
NIC Link Timeout:	0.1...60 s

Optional Additional Second Rear Communication (Rear Port2 (RP2))

RP2 Port Config:	EIA(RS)232 EIA(RS)485 K-Bus
RP2 Comms Mode:	IEC 60870 FT1.2 IEC 60870 10-Bit No parity
RP2 Address:	0…255
RP2 InactivTimer:	1…30 mins
RP2 Baud Rate:	9600/19200/38400 bits/s

Note	*If RP2 Port Config is K Bus the baud rate is fixed at 64 kbits/s*

Commission Tests

Monitor Bit 1: (up to):
Monitor Bit 8:
Binary function link strings, selecting which DDB signals have their status visible in the Commissioning menu, for test purposes

Test Mode:	Disabled Test Mode Blocked Contacts

Test Pattern:
Configuration of which output contacts are to be energized when the contact test is applied

Circuit Breaker Condition Monitoring (CB Monitor Setup)

Broken I^:	1.0…2.0
I^ Maintenance:	Alarm Disabled/Enabled
I^ Maintenance:	1…25000
I^ Lockout:	Alarm Disabled/Enabled
I^ Lockout:	1…25000
No. CB Ops Maint:	Alarm Disabled/Enabled
No. CB Ops Maint:	1…10000
No. CB Ops Lock:	Alarm Disabled/Enabled
No. CB Ops Lock:	1…10000
CB Time Maint:	Alarm Disabled/Enabled
CB Time Maint:	0.005…0.500 s
CB Time Lockout:	Alarm Disabled/Enabled
CB Time Lockout:	0.005…0.500 s
Fault Freq Lock:	Alarm Disabled/Enabled
Fault Freq Count:	1…9999
Fault Freq Time:	0…9999 s

Opto Coupled Binary Inputs (Opto Config)

Global Nominal V: 24 - 27 V
30 - 34 V
48 - 54 V
110 - 125 V
220 - 250 V
Custom
Opto Input 1: (up to):
Opto Input #. (# = max. opto no. fitted):
Custom options allow independent thresholds to be set per opto, from the same range as above.
Opto Filter Control:
Binary function link string, selecting which optos will have an extra 1/2 cycle noise filter, and which will not.
Characteristics: Standard 60% - 80%
50% - 70%

Control Inputs into PSL (Ctrl I/P Config)

Hotkey Enabled:
Binary function link string, selecting which of the control inputs will be driven from Hotkeys.
Control Input 1: (up to):
Control Input 32: Latched/Pulsed
Ctrl Command 1: (up to):
Ctrl Command 32: ON/OFF
SET/RESET
IN/OUT
ENABLED/DISABLED

IED Configurator

Switch Conf. Bank: No Action/Switch Banks
Restore MCL: No Action, Restore MCL

IEC 61850 GOOSE

GoEna: Disabled/Enabled
Test Mode: Disabled/
Pass Through/
Forced
VOP Test Pattern: 0x00000000... 0xFFFFFFFF
Ignore Test Flag: No/Yes

Control Input User Labels (Ctrl I/P Labels)

Control Input 1: (up to):
Control Input 32:
User defined text string to describe the function of the particular control input

Settings in Multiple Groups

Note	*All settings here onwards apply for setting groups # = 1 to 4.*

PROTECTION FUNCTIONS

System Config

Phase Sequence: Standard ABC/
Reverse ACB
VT Reversal: No Swap/
A-B Swapped/
B-C Swapped/
C-A Swapped
CT Reversal: No Swap/
A-B Swapped/
B-C Swapped/
C-A Swapped
C/S Input: A-N, B-N, C-N, A-B, B-C, C-A
C/S V Ratio Corr: 0.500...2.000
Main VT Vect Grp: 0...11
Main VT Location: Gen/Bus

Reverse/Low Forward/Overpower

Operating mode: Generating
Motoring
Power 1 Function: Reverse
Low forward
Over
-P>1 Setting (reverse power/P<1 Setting (Low forward power)/ P>1 Setting (Overpower):

4…300.0 W	(1 A, 100 V/120 V)
16…1200.0 W	(1 A, 380 V/480 V)
20…1500.0 W	(5 A, 100 V/120 V)
80…6000.0 W	(5 A, 380 V/480 V)

Equivalent Range in %Pn 2%…157%
Power 1 Time Delay: 0.00…100.0 s
Power 1 DO Timer: 0.00…100.0 s
P1 Poledead Inh: Disabled/Enabled
Power 2 as Power 1

Sensitive/Reverse/Low Forward/Overpower

Operating mode: Generating
Motoring
Sen Power1 Func: Reverse
Low forward
Over
Sen -P>1 Setting (Reverse Power)/Sen <P Setting (Low Forward Power)/Sen >P Setting (Over Power):

0.3…100.0 W	(1 A, 100/120 V)
1.20…400.0 W	(1 A, 380/480 V)
1.50…500.0 W	(5 A, 100/120 V)
6.0…2000.0 W	(5 A, 380/480 V)

Equivalent range in %Pn 0.5%…157%
Sen Power 1 Delay: 0.00…100.0 s
Power 1 DO Timer: 0.00…100.0 s
P1 Poledead Inh: Disabled/Enabled
Comp angle θC: -5°…+5.0°
Sen Power2 as Sen Power 1

Phase Overcurrent (Overcurrent)

Phase O/C:	Sub Heading
I>1 Function:	Disabled
	DT
	IEC S Inverse
	IEC V Inverse
	IEC E Inverse
	UK LT Inverse
	UK Rectifier
	RI
	IEEE M Inverse
	IEEE V Inverse
	IEEE E Inverse
	US Inverse
	US ST Inverse
I>1 Direction:	Non-Directional
	Directional Fwd
	Directional Rev
I>1 Current Set:	0.08…4.00 In
I>1 Time Delay:	0.00…100.00 s
I>1 TMS:	0.025…1.200
I>1 Time Dial:	0.01…100.00
I>1 K (RI):	0.10…10.00
I>1 Reset Char:	DT/Inverse
I>1 tRESET:	0.00…100.00 s
I>2 as I>1	
I>3 Status:	Disabled/Enabled
I>3 Direction:	Non-Directional
	Directional Fwd
	Directional Rev
I>3 Current Set:	0.08…10.00 In
I>3 Time Delay:	0.00…100.00 s
I>4 as I>3	
I> Char Angle:	-95…+95°

I >Function Link:

Bit 0 = VTS Blocks I>1
Bit 1 = VTS Blocks I>2
Bit 2 = VTS Blocks I>3
Bit 3 = VTS Blocks I>4
Bit 4, 5, 6 & 7 are not used
Binary function link string, selecting which overcurrent elements (stages 1 to 4) will be blocked if VTS detection of fuse failure occurs.

Inverse Time (IDMT) Characteristic

IDMT characteristics are selectable from a choice of four IEC/UK and five IEEE/US curves as shown in the table below.

The IEC/UK IDMT curves conform to the formula:

$$t = T \times \left(\frac{K}{(I/I_S)^{\alpha} - 1} + L \right)$$

The IEEE/US IDMT curves conform to the formula:

$$t = TD \times \left(\frac{K}{(I/I_S)^{\alpha} - 1} + L \right)$$

Where:
t = Operation time
K = Constant
I = Measured current
IS = Current threshold setting
α = Constant
L = ANSI/IEEE constant (zero forIEC/UK curves)
T = Time multiplier setting for IEC/UK curves
TD = Time dial setting for IEEE/US curves

IDMT characteristics

IDMT curve	Stand.	K	α	L
Standard inverse	IEC	0.14	0.02	0
Very inverse	IEC	13.5	1	0
Extremely inverse	IEC	80	2	0
Long time inverse	UK	120	1	0
Rectifier	UK	45900	5.6	0
Moderately inverse	IEEE	0.0515	0.02	0.114
Very inverse	IEEE	19.61	2	0.491
Extremely inverse	IEEE	28.2	2	0.1217
Inverse	US-C08	5.95	2	0.18
Short time inverse	US-C02	0.16758	0.02	0.11858

The IEC extremely inverse curve becomes definite time at currents greater than 20 x setting. The IEC standard, very and long time inverse curves become definite time at currents greater than 30 x setting.
For all IEC/UK curves, the reset characteristic is definite time only.
For all IEEE/US curves, the reset characteristic can be selected as either inverse curve or definite time.
The inverse reset characteristics are dependent upon the selected IEEE/US IDMT curve as shown in the table below.
All inverse reset curves conform to the formula:

$$tRESET = \frac{TD \times S}{(1 - M^2)} \text{ in seconds}$$

Where:
TD = Time dial setting for IEEE curves
S = Constant
M = I/Is

Curve description	Standard	S
Moderately inverse	IEEE	4.85
Very inverse	IEEE	21.6
Extremely inverse	IEEE	29.1
Inverse	US	5.95
Short time inverse	US	2.261

The RI curve (electromechanical) has been included in the first stage characteristic setting options for Phase Overcurrent and Earth Fault protections. The curve is represented by the equation:

$$t = K \times \left(\frac{1}{0.339 - \left({}^{0.236}/_{M} \right)} \right) \text{ in seconds}$$

With K adjustable from 0.1 to 10 in steps of 0.05
M = I/Is

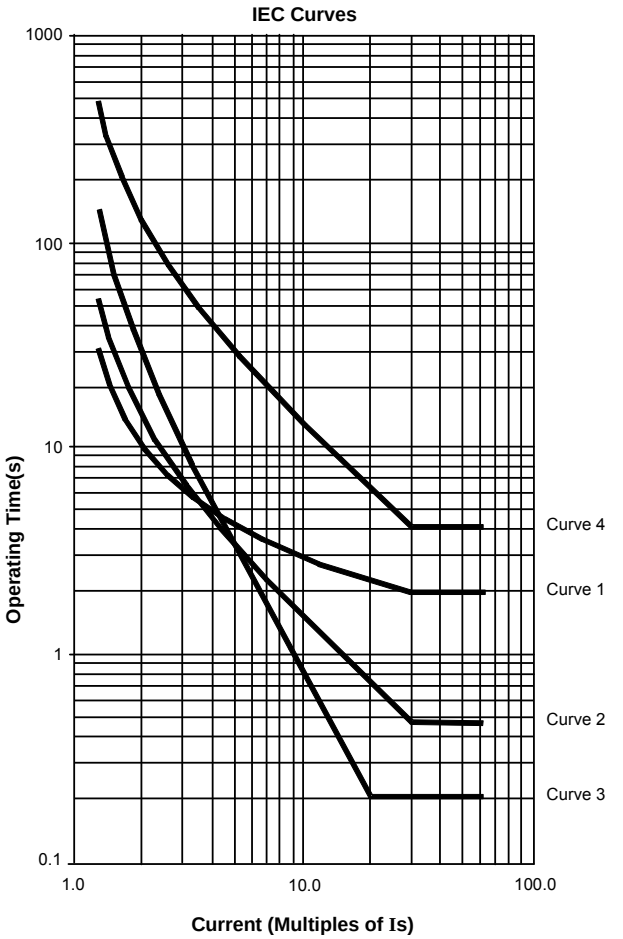

Curve 1	Standard inverse
Curve 2	Very inverse
Curve 3	Extremely inverse
Curve 4	UK long time inverse

P2136ENa

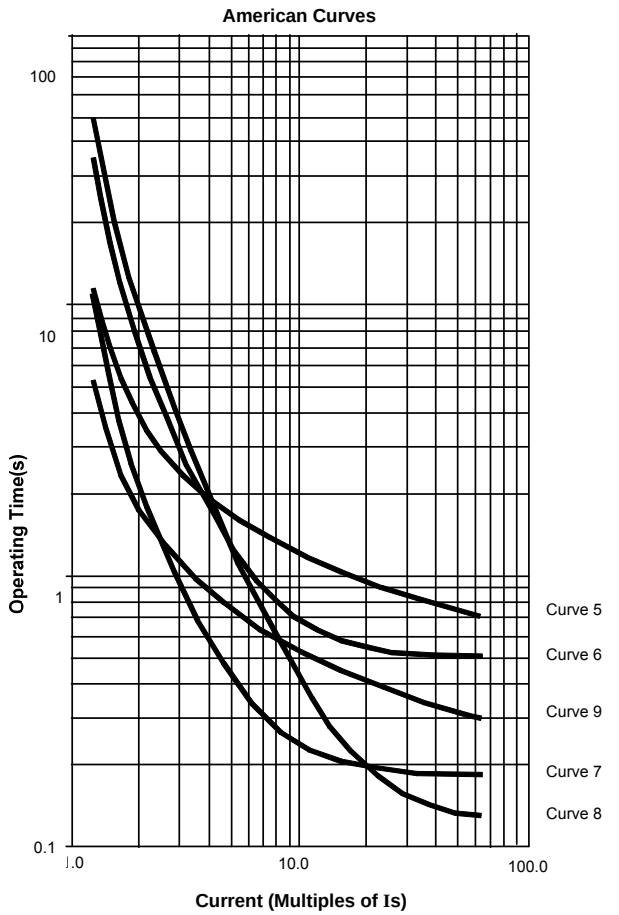

Curve 5	IEEE moderately inverse
Curve 6	IEEE very inverse
Curve 7	IEEE extremely inverse
Curve 8	US inverse
Curve 9	US short time inverse

P2137ENa

NPS Overcurrent

I2>1 Status:	Disabled/Enabled
I2>1 Direction:	Non-Directional Directional Fwd Directional Rev
I2> Current Set:	0.08…4.0 In
I2> Time Delay:	0.00…100.00 s
I2>2/3/4 as for I2>1	
I2> VTS Block:	Bit 0 = VTS Blocks I2>1 Bit 1 = VTS Blocks I2>2 Bit 2 = VTS Blocks I2>3 Bit 3 = VTS Blocks I2>4 Bits 4, 5, 6 & 7 are not used

Binary function link string, selecting which NPS overcurrent elements (stages 1 to 4) will be blocked if VTS detection of fuse failure occurs.

I2> V2pol Set:	0.5…25.0 (100 V 120 V) 2…100 V (380/480 V)
I2> Char Angle:	-95°…+95°

Thermal Overload

Thermal:	Disabled/Enabled
Thermal I>:	0.50…2.50 In
Thermal Alarm:	20..100%
T-heating:	1…200 minutes
T-cooling:	1…200 minutes
M Factor:	0…10

The thermal time characteristic is given by:

$t = \tau \log_e (I_{eq}^2 - I_P^2)/(I_{eq}^2 - (\text{Thermal I>})2)$

$t = \tau . \log_e ((K^2-A^2)/(K^2-1))$

Where:

$K = I_{eq}/\text{Thermal I>}$

$A = I_P/\text{Thermal I>}$

t =Time to trip, following application of the overload current, I

τ =Heating time constant of the protected plant

I_{eq} = Equivalent current

Thermal I> = Relay setting current

I_P = Steady state pre-load current before application of the overload

$I_{eq} = \sqrt{(I12 + MI22)}$

I1 = Positive sequence current

I2 = Negative sequence current

M = A user settable constant proportional to the thermal capacity of the machine

Earth Fault

IN1>1 Function:	Disabled DT IEC S Inverse IEC V Inverse IEC E Inverse UK LT Inverse RI IEEE M Inverse IEEE V Inverse IEEE E Inverse US Inverse US ST Inverse IDG
IN1>1 Directional:	Non-Directional Directional Fwd Directional Rev
IN1>1 Current Set:	0.08…4.00 In
IN1>1 IDG Is:	1.0…4.0 In
IN1>1 Time Delay:	0.00…200.00 s
IN1>1 TMS:	0.025…1.200
IN1>1 Time Dial:	0.01…100.00
IN1>1 K(RI):	0.10….10.00
IN1>1 IDG Time:	1.00...2.00
IN1>1 Reset Char.:	DT/Inverse
IN1>1 tRESET:	0.00…100.00 s
IN1>2 as IN>1	
IN1>3 Status:	Disabled Enabled
IN1>3 Directional:	Non-Directional Directional Fwd Directional Rev
IN1>3 Current Set:	0.08…32.00 In
IN1>3 Time Delay:	0.00…200.00 s
IN1>4 as IN>3	
IN1> Blocking:	

Binary function link string, selecting which ground overcurrent elements (stages 1 to 4) will be blocked if VTS detection of fuse failure occurs.

IN1> Char Angle:	-95… +95°
IN1> Polarization:	Zero Sequence Neg. Sequence
IN1> VNpol Set:	0.5…80.0 V (100/110 V) 2…320 V (380/480 V)
IN1> V2pol Set:	0.5…25.0 V (100/110 V) 2…100 V (380/480 V)
IN1> I2pol Set:	0.08…1.00 In

The IDG curve is commonly used for time delayed earth fault protection in the Swedish market. This curve is available in stage 1 of the Earth Fault protection.
The IDG curve is represented by the following equation:

$$t = 5.8 - 1.35 \log_e \left(\frac{I}{IN > Setting} \right) \text{ in seconds}$$

Where:
I = Measured current
IN>Setting = An adjustable setting which defines the start point of the characteristic
Although the start point of the characteristic is defined by the "IN>" setting, the actual relay current threshold is a different setting called "IDG Is". The "IDG Is" setting is set as a multiple of "IN>".

An additional setting "IDG Time" is also used to set the minimum operating time at high levels of fault current.

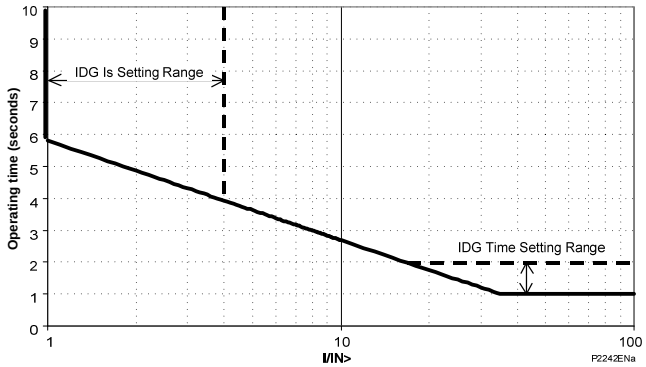

IDG Characteristic

SEF/REF Prot'n

SEF/REF Options:	SEF SEF Cos (PHI) SEF Sin (PHI) Wattmetric Hi Z REF
ISEF>1 Function:	Disabled DT IEC S Inverse IEC V Inverse IEC E Inverse UK LT Inverse RI IEEE M Inverse IEEE V Inverse IEEE E Inverse US Inverse US ST Inverse IDG
ISEF>1 Directional:	Non-Directional Directional Fwd Directional Rev.
ISEF>1 Current Set:	0.005...0.10 In
ISEF>1 IDG Is:	1.0...4.0 In
ISEF>1 Time Delay:	0.00...200.00 s
ISEF>1 TMS:	0.025...1.200
ISEF>1 Time Dial:	0.01...100.0
ISEF>1 IDG Time:	1.00...2.00
ISEF>1 Reset Char:	DT/Inverse
ISEF>1 tRESET:	0.00...100.00 s
ISEF>2 as ISEF>2	
ISEF>3 Status:	Disabled Enabled
ISEF>3 Directional:	Non-Directional Directional Fwd Directional Rev
ISEF>3 Current Set:	0.005...0.80 In
ISEF>3 Time Delay:	0.00...200.00 s
ISEF>4 as ISEF>3	
ISEF> Blocking:	Binary function link string, selecting which ground overcurrent elements (stages 1 to 4) will be blocked if VTS detection of fuse failure occurs.
ISEF> Char. Angle:	-95...+95°
ISEF> VNpol Set:	0.5...80.0 V (100/120 V) 2...320 V (380/480 V)
WATTMETRIC SEF:	PN> Setting: 0....20 In W (100/120 V) PN> Setting: 0 ....80 In W (380/480 V)

Restricted Earth Fault (High Impedance)

IREF> Is: 0.05.1.00 In

Residual O/V NVD

VN>1 Status:	Disabled/Enabled
VN>1 Input:	Derived
VN> 1 Function:	Disabled DT IDMT
VN> 1 Voltage Set:	1…80 V (100/120 V) 4…320 V (380/480 V)
VN> 1 Time Delay:	0.00…100.00 s
VN>1 TMS:	0.5…100.0
VN> 1 tRESET:	0.00…100.00
VN>2 as VN>1	
VN>3/4 as VN>1 except	
VN>3/4 Input:	VN1

DF/DT

Operating Mode:	Fixed Window/Rolling Window
df/dt Avg Cycles:	2…12
df/dt Iterations:	1…4
df/dt>1 Status:	Disabled/Enabled
df/dt>1 Setting:	0.10…10.00 Hz
df/dt>1 Dir'n:	Negative/Positive/Both
df/dt>1 Time:	0.00…100.00 s
df/dt>1 f L/H:	Disabled/Enabled
df/dt>1 f Low:	45.00…65.00 Hz
df/dt>1 f High:	45.00…65.00 Hz
df/dt>2/3/4 Status:	Disabled/Enabled
df/dt>2/3/4 Setting:	0.10…10.00 Hz
df/dt>2/3/4 Dir'n:	Negative/Positive/Both
df/dt>2/3/4 Time:	0.00…100.00 s

V Vector Shift

V Shift Status:	Disabled/Enabled
V Shift Angle:	2…30°

Reconnect Delay

Reconnect Status:	Disabled/Enabled
Reconnect Delay:	0…300.0 s
Reconnect tPULSE:	0…10.0 s

VOLTAGE PROTECTION

Undervoltage

V< Measur't Mode:	Phase-Phase
	Phase-Neutral
V< Operate Mode:	Any Phase
	Three Phase
V< 1 Function:	Disabled
	DT
	IDMT
V<1 Voltage Set:	10…120 V (100/120 V)
	40…480 V (380/480 V)
V<1 Time Delay:	0.00…100.00 s
V<1 TMS:	0.05…100.0
V<1 Poledead Inh:	Disabled/Enabled
V<2 Function:	Disabled
	DT
V<2 Status:	Disabled/Enabled
V<2 Voltage Set:	10…120 V (100/120 V)
	40…480 V (380/480 V)
V<2 Time Delay: 0.00…100.00 s	
V<2 Poledead Inh:	Disabled/Enabled

The inverse characteristic is given by the formula:

$$t = \frac{K}{(1 - M)}$$

Where:
K = Time multiplier setting
T = Operating time in seconds
M = Applied input voltage/relay setting voltage

Overvoltage

V> Measur't Mode:	Phase-Phase
	Phase-Neutral
V> Operate Mode:	Any Phase
	Three Phase
V> 1 Function:	Disabled
	DT
	IDMT
V>1 Voltage Set:	
60…185 V	(100/120 V)
240…740 V	(380/480 V)
V>1 Time Delay:	0.00…100.00 s
V>1 TMS:	0.05…100.0
V>2 Status:	Disabled/Enabled
V>2 Voltage Set:	
60…185 V	(100/120 V)
240…740 V	(380/480 V)
V>2 Time Delay: 0.00…100.00 s	

The inverse characteristic is given by the formula:

$$t = \frac{K}{(M - 1)}$$

Where:
K = Time multiplier setting
t = Operating time in seconds
M = Applied input voltage/relay setting voltage

NPS Overvoltage

V2>1 status:	Enabled/Disabled
V2>1 Voltage Set:	1…150 V (100/120 V)
	4…600 V (380/480 V)
V2>1 Time Delay:	0.00…100.00 s

FREQUENCY PROTECTION

Underfrequency

F<1 Status:	Disabled/Enabled
F<1 Setting:	45.00…65.00 Hz
F<1 Time Delay:	0.1…100.0 s
F<2/3/4 as F<1	
F< Function Link:	
Bit 0 - Enable Block F<1 during poledead	
Bit 1 - Enable Block F<2 during poledead	
Bit 2 - Enable Block F<3 during poledead	
Bit 3 - Enable Block F<4 during poledead	

Overfrequency

F>1 Status:	Disabled/Enabled
F>1 Setting:	45.00…68.00 Hz
F>1 Time Delay:	0.1…100.0 s
F>2 as F>1	

CB Fail

CB Fail 1 Status:	Disabled/Enabled
CB Fail 1 Timer:	0.00…10.00 s
CB Fail 2 Status:	Disabled/Enabled
CB Fail 2 Timer:	0.00…10.00 s
CBF Non I Reset:	I< Only, CB Open & I<, Prot Reset & I<
CBF Ext Reset:	I< Only, CB Open & I <, Prot Reset & I<
I< Current Set:	0.02…3.200 In
IN< Current Set:	0.02…3.200 In
ISEF< Current:	0.0010…0.8000 In
Remove I> Start:	Disabled/Enabled
Remove IN< Start:	Disabled/Enabled

SUPERVISORY FUNCTIONS

Voltage Transformer Supervison

VTS Status: Blocking/Indication		
VTS Reset Mode:	Manual/Auto	
VTS Time Delay:	1.0…10.0 s	
VTS I> Inhibit:	0.08 In…32.0 In	
VTS I2> Inhibit:	0.05 In…0.50 In	
Negative phase sequence voltage (V2):		
	10 V	(100/120 V)
	40 V	(380/480 V)
Phase overvoltage:		
Pick-up	30 V,	
Drop-off	10 V	(100/120 V)
Pick-up	120 V,	
Drop-off	40 V	(380/480 V)
Superimposed Current:	0.1 In	

Current Transformer Supervision

CTS 1 Status:	Disabled/Enabled	
CTS 1 VN Input:	Measured/Derived	
CTS 1 VN< Inhibit:	0.5…22 V	(100/120 V)
	2…88 V	(380/480 V)
CTS 1 IN> Set:	0.08…4 In	

System Checks Voltage Monitors

Live/Dead Voltage:	1.0…132.0 V (100/110 V) 22…528 V (380/440 V)
Gen Undervoltage:	1.0…132.0 V (100/110 V) 22…528 V (380/440 V)
Gen Overvoltage:	1.0…185.0 V (100/110 V) 22…740 V (380/440 V)
CS Undervoltage:	10.0…132.0 V (100/110 V) 22…528 V (380/440 V)
CS Overvoltage:	60.0…185.0 V (100/110 V) 240…740 V (380/440 V)
CS Diff Voltage:	1.0…132.0 V (100/110 V) 4…528 V (380/440 V)
CS Voltage Block:	None Undervoltage Overvoltage Differential UV & O V UV & Diff V OV & Diff V UV, OV & Diff V
Gen Underfreq:	45.00...65.00 Hz
Gen Overfreq:	45.00...65.00 Hz

Check Sync

CS1 Status:	Disabled/Enabled
CS1 Phase Angle:	5…90°
CS1 Slip Control:	None Timer Frequency Both
CS1 Slip Freq.:	0.01…1.00 Hz
CS1 Slip Timer:	0.00…99.00 s
CS2 Status:	Disabled/Enabled
CS1 Slip Control:	None Timer Frequency Timer + Freq Freq + CB Comp
CS2 Slip Freq.:	0.01…1.00 Hz
CS2 Slip Timer:	0.00…99.00 s

System Split

SS Status:	Disabled/Enabled
SS Phase Angle:	90…175°
SS Under V Block:	Disabled/Enabled
SS Undervoltage:	10.0…132.0 V (100/110 V) 40…528 V (380/440 V)
SS Timer:	0.00…99.00 s
CB Close Time:	0.000…0.500 s

PLANT SUPERVISION

CB State Monitoring Control and Condition Monitoring

Broken I^:	1…2.0
I^ Maintenance:	Alarm disabled Alarm enabled
I^ Maintenance:	1 In^…25000 In^
I^ Lockout:	Alarm disabled Alarm enabled
I^ Lockout:	1…25000
No CB Ops. Maint:	Alarm disabled Alarm enabled
No CB Ops: Maint:	1…10000
No CB Ops Lock:	Alarm disabled Alarm enabled
No CB Ops Lock:	1…10000
CB Time Maint:	Alarm disabled Alarm enabled
CB Time Maint:	0.005…0.500 s
CB Time Lockout:	Alarm disabled Alarm enabled
CB Time Lockout:	0.005…0.500 s
Fault Freq Lock:	Alarm disabled Alarm enabled
Fault Freq Count:	1…9999
Fault Freq Time:	0…9999 s

DYNAMIC RATING

Dyn Line Rating:	Disabled/CIGRE Std 207/ IEEE Std 738

DLR Line Setting

Conductor Type:

Gopher, Weasel, Ferret, Rabbit, Horse, Dog, Wolf, Dingo, Lynx, Caracal, Panther, Jaguar, Zebra, Fox, Mink, Skunk, Beaver, Raccoon, Otter, Cat, Hare, Hyena, Leopard, Tiger, Coyote, Lion, Bear, Batang, Goat, Antelope, Sheep, Bison, Deer, Camel, Elk, Moose, Custom

NonFerrous Layer:	1…3
DC Resist per km:	0.001…2.0000 Ω
Overall Diameter:	0.001…0.10000 m
Outer Layer Diam:	0.001…0.0100 m
TotalArea(mm sq):	10.00…1000.00 mm^2
TempCoefR x0.001:	1.00…10.00 K
mc:	1.0…5000.0 J/(m·K)
Solar Absopt:	0.23…0.95
Line Emissivity:	0.23...0.95
Line Elevation:	-1000...6000 m
Line Azimuth Min:	0.0…360.0°
Line Azimuth Max:	0.0…360.0°
T Conductor Max:	0.0 …300.0°C
Ampacity Min:	0.100…4.000 In
Ampacity Max:	0.100…4.000 In
Drop-off Ratio:	70.0...99.0%
Line Direction:	0.0…360.0°

DLR Channel Set

Ambient Temp:	Disabled, CLI1, CLI2, CLI3, CLI4
Default Ambient T:	-100.0 …100.0°C
Ambient T Corr:	-50.0 …50.0°C
Ambient T Min:	-100.0 …100.0°C
Ambient T Max:	-100.0 …100.0°C
Ambient T AvgSet:	Disabled/Enabled
Ambient T Avg Dly:	60…3600 s
Amb T Input Type :	0-1 mA, 0-10 mA, 0-20 mA, 4-20 mA
Amb T I/P Min:	-100.0…100.0°C
Amb T I/P Max:	-100.0 …100.0°C
Amb T I< Alarm:	Disabled/Enabled
Amb T I< Alm Set:	0…4 mA
Wind Velocity:	Disabled, CLI1, CLI2, CLI3, CLI4
Default Wind Vel:	0.00…60.00 m/s
Wind Vel Corr:	0...150%
Wind Vel Min:	0.00…60.00 m/s
Wind Vel Max:	0.00…60.00 m/s
Wind Vel AvgSet:	Disabled/Enabled
Wind Vel Avg Dly:	60…3600 s
WV Input Type :	0-1 mA, 0-10 mA, 0-20 mA, 4-20 mA
WV I/P Minimum:	0.00…60.00 m/s
WV I/P Maximum:	0.00…60.00 m/s
WV I< Alarm:	Disabled/Enabled
WV I< Alarm Set:	0…4 mA
Wind Direction:	Disabled, CLI1, CLI2, CLI3, CLI4
Default Wind Dir:	0.0…360.0°
Wind Dir Corr:	-180.0…180.0°
Wind Dir Min:	0.0…360.0°
Wind Dir Max:	0.0…360.0°
Wind Dirl AvgSet:	Disabled/Enabled
Wind Dir Avg Dly:	60…3600 s
WD Input Type :	0-1 mA, 0-10 mA, 0-20 mA, 4-20 mA
WD I/P Minimum:	0.0…360.0°
WD I/P Maximum:	0.0…360.0°
WD I< Alarm:	Disabled/Enabled
WD I< Alarm Set:	0…4 mA
Solar Radiation:	Disabled, CLI1, CLI2, CLI3, CLI4
Default Solar R:	0…3000 W
Solar Rad Corr:	-1000...1000 W
Solar Rad Min:	0…3000 W
Solar Rad Max:	0…3000 W
Solar Rad AvgSet:	Disabled/Enabled
Solar Rad Avg Dly:	60…3600 s
SR Input Type :	0-1 mA, 0-10 mA, 0-20 mA, 4-20 mA
SR I/P Minimum:	0…3000 W
SR I/P Maximum:	0…3000 W
SR I< Alarm:	Disabled/Enabled
SR I< Alarm Set:	0…4 ma

DLR Prot

DLR I>1 Trip:	Disabled/Enabled
DLT I>1 Set:	20.0%...200.0%
DLR I>1 Delay:	0…30000 s

DLR I>2/3/4/5/6 as DLR I>1

Input Labels

Opto Input 1…32: Input L1…Input L32

Output Labels

Relay 1…32: Output R1…Output R32

Current Loop Input

CLIO1 Input 1: Disabled/Enabled
CLI1 Input Type: 0 - 1 mA
0 - 10 mA
0 - 20 mA
4 - 20 mA
CLI1 Input Label: 16 characters (CLIO input 1)
CLI1 Minimum: -9999…+9999
CLI1 Maximum: -9999…+9999
CLI1 Alarm: Disabled/Enabled
CLI1 Alarm Fn: Over/Under
CLI1 Alarm Set: CLI1 min…CLI1 max
CLI1 Alarm Delay: 0.0…100.0 s
CLI1 Trip: Disabled/Enabled
CLI1 Trip Fn: Over/Under
CLI1 Trip Set: CLI1 min…CLI1 max
CLI1 Trip Delay: 0.0…100.0 s
CLI1 I< Alarm (4…20 mA input only):
Disabled/Enabled
CLI1 I< Alm Set (4…20 mA input only):
0.0…4.0 mA
CLI2/3/4 as CLI1

Current Loop Output

CLO1 Output 1: Disabled/Enabled
CLO1 Output Type: 0 - 1 mA
0 - 10 mA
0 - 20 mA
4 - 20 mA
CLO1 Set Values: Primary/Secondary
CLO1 Parameter: As shown below*
CLO1 Min: Range, step size and unit corresponds to the selected parameter
CLO1 Max: Same as CLO1 Min
CLO2/3/4 as CLO1
Current Loop Output Parameters
Current Magnitude: IA Magnitude
IB Magnitude
IC Magnitude
IN Derived Mag: 0.00…16.0 A
I Sen Mag: 0.00… 2.0 A
Phase Sequence Components:
I1 Magnitude
I2 Magnitude
I0 Magnitude: 0.00…16.0 A
Phase Currents: IA RMS*
IB RMS*
IC RMS*
0.00…16.0 A

P-P Voltage Magnitude: VAB Magnitude
VBC Magnitude
VCA Magnitude
0.0…200.0 V
P-N Voltage Magnitude: VAN Magnitude
VBN Magnitude
VCN Magnitude
0.0…200.0 V
Neutral Voltage Magnitude: VN1 Measured Mag
VN Derived Mag
0.0…200.0 V
Phase Sequence Voltage Components:
V1 Magnitude*
V2 Magnitude
V0 Magnitude
0.0…200.0 V
RMS Phase Voltages: VAN RMS*
VBN RMS*
VCN RMS*
0.0…200.0 V
Frequency: 0.00…70.0 Hz
3 Phase Watts*: -6000 W…6000 W
3 Phase Vars*: -6000 Var…6000 Var
3 Phase VA*: 0…6000 VA
3Ph Power Factor*: -1…1
Single Phase Active Power:
A Phase Watts*:
B Phase Watts*:
C Phase Watts*:
-2000 W…2000 W
Single Phase Reactive Power:
A Phase Vars*:
B Phase Vars*:
C Phase Vars*
-2000 Var…2000 Var
Single Phase Apparent Power:
A Phase VA*:
B Phase VA*:
C Phase VA*
0…2000 VA
Single Phase Power Factor:
Aph Power Factor*
BPh Power Factor*
CPh Power Factor*
-1…1
3 Phase Current Demands:
IA Fixed/Roll/Peak Demand*
IB Fixed/Roll/Peak Demand*
IC Fixed/Roll/Peak Demand*
0.00…16.0 A
3ph Active Power Demands:
3Ph W Fix/Roll/Peak Demand*
-6000W…6000W
3ph Reactive Power Demands:
3Ph Vars Fix/Roll/Peak Dem*
-6000 Var…6000 Var

Thermal Overload:	0.00…200.0%
CL Input 1-4:	-9999…9999.0
DLR Ampacity:	0.00…4.0 A
Maximum ac current:	0.00…16.0 A
df/dt:	-10.00…10.00 Hz/s
Check Synch Voltages:	0.0…200.0 V
Slip Frequency:	0.00…70.00 Hz

Note 1:	*Measurements marked with an asterisk, the internal refresh rate is nominally 1 s, others are 0.5 power system cycles or less.*
Note 2:	*The polarity of Watts, Var and power factor is affected by the measurements Mode setting.*
Note 3:	*These settings are for nominal 1 A and 100/120 V versions only. For other versions they need to be multiplied accordingly.*

MEASUREMENTS LIST

Measurements 1

Iφ Magnitude
Iφ Phase Angle
    Per phase (φ = A/A-1, B/B-1, C/C-1) current measurements
IN Derived Mag
IN Derived Angle
ISen Mag
ISen Angle
I1 Magnitude
I2 Magnitude
I0 Magnitude
Iφ RMS
    Per phase (φ = A, B, C) RMS current measurements
IN -2 Derived
Vφ-φ Magnitude
Vφ-φ Phase Angle
Vφ Magnitude
Vφ Phase Angle
    All phase-phase and phase-neutral voltages (φ = A, B, C).
VN Measured Mag
VN Measured Ang
VN Derived Mag
V1 Magnitude
V2 Magnitude
V0 Magnitude
Vφ RMS
    All phase-neutral voltages (φ = A, B, C).
Frequency
I1 Magnitude
I1 Angle
I2 Magnitude
I2 Angle
I0 Magnitude
I0 Angle
V1 Magnitude
V1 Angle
V2 Magnitude
V2 Angle
V0 Magnitude
V0 Angle
C/S Voltage Mag
C/S Voltage Ang
Gen-Bus Volt
Gen-Bus Angle
Slip Frequency
C/S Frequency

Measurements 2

φ Phase Watts
φ Phase VArs
φ Phase VA
All phase segregated power measurements, real, reactive and apparent (φ = A, B, C).
3 Phase Watts
3 Phase VArs
3 Phase VA
NPS Power S2
3Ph Power Factor
φPh Power Factor
Independent power factor measurements for all three phases (φ = A, B, C).
3Ph WHours Fwd
3Ph WHours Rev
3Ph VArHours Fwd
3Ph VArHours Rev
3Ph W Fix Demand
3Ph VArs Fix Dem
Iφ Fixed Demand
Maximum demand currents measured on a per phase basis (φ = A, B, C).
3Ph W Roll Dem
3Ph VArs Roll Dem
Iφ Roll Demand
Maximum demand currents measured on a per phase basis (φ = A, B, C).
3Ph W Peak Dem
3Ph VAr Peak Dem

Iφ Peak Demand
Maximum demand currents measured on a per phase basis (φ = A, B, C).
Reset Demand: No/Yes

Measurements 3

IREF Diff
A Ph Sen Watts
A Ph Sen VArs
A Phase Power Angle
Thermal Overload
Reset Thermal O/L: No/Yes
CLIO Input 1/2/3/4
df/dt

Measurements 4

Max Iac
DLR Ambient Temp
Wind Velocity
Wind Direction
Solar Radiation
Effct wind angle
Pc
Pc, natural
Pc1, forced
Pc2, forced
DLR Ampacity
DLR CurrentRatio
Dyn Conduct Temp
Steady Conduct T
Time Constant

Circuit Breaker Monitoring Statistics

CB Operations
Total Iφ Broken
Cumulative breaker interruption duty on a per phase basis (φ = A, B, C)
CB Operate Time
Reset CB Data: No/Yes.

GETTING STARTED

CHAPTER 3

Date:	November 2011
Hardware Suffix:	J (P341/P342) K (P343/P344/P345/P346) A (P391)
Software Version:	36/71 (P341 with DLR) and 36 (P343/P344/P345/P346)
Connection Diagrams:	10P341xx (xx = 01 to 12) 10P342xx (xx = 01 to 17) 10P343xx (xx = 01 to 19) 10P344xx (xx = 01 to 12) 10P345xx (xx = 01 to 07) 10P345xx (xx = 01 to 07) 10P346xx (xx = 01 to 19) 10P391xx (xx =01 to 02)

CONTENTS

Page (GS) 3-

FIGURES

TABLES

1 INTRODUCTION TO THE RELAY

1.1 User Interfaces and Menu Structure

The settings and functions of the protection relay are available from the front panel keypad and LCD, and through the front and rear communication ports.

1.2 Front Panel

Figure 1 shows the front panel of the relay; the hinged covers at the top and bottom of the front panel are shown open. An optional transparent front cover physically protects the front panel. With the cover in place, access to the user interface is read-only. Removing the cover allows access to the relay settings and does not compromise the protection of the product from the environment.

When editing relay settings, full access to the relay keypad is needed. To remove the front panel:

1. Open the top and bottom covers, then unclip and remove the transparent cover. If the lower cover is secured with a wire seal, remove the seal.
2. Using the side flanges of the transparent cover, pull the bottom edge away from the relay front panel until it is clear of the seal tab.
3. Move the cover vertically down to release the two fixing lugs from their recesses in the front panel.

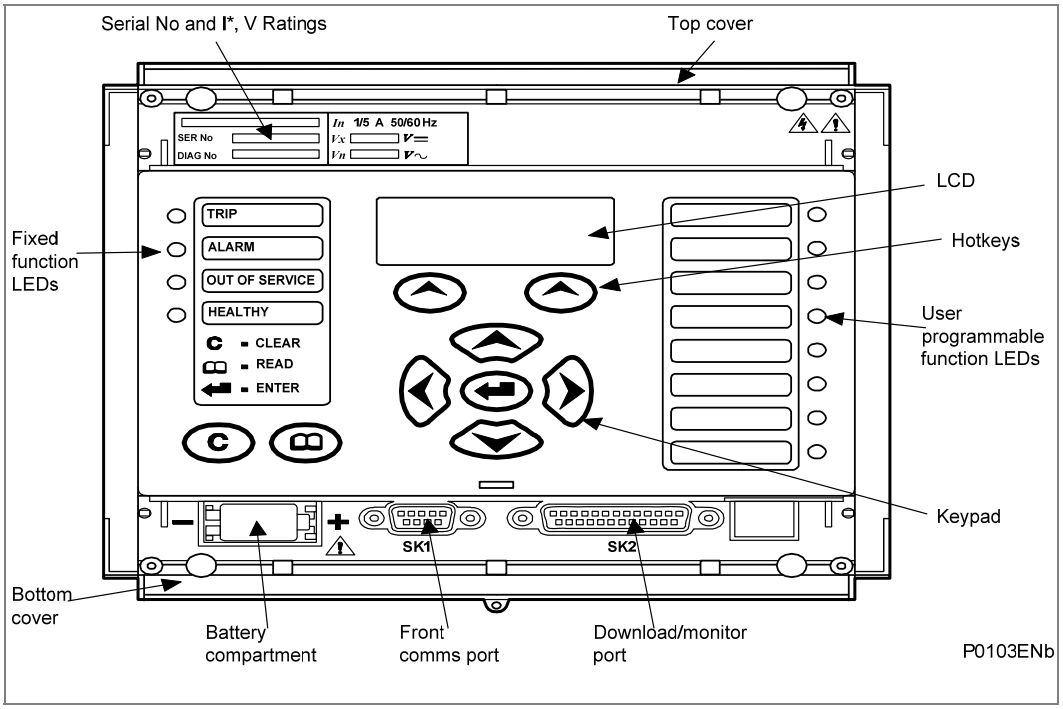

Figure 1 - Relay front view (P341/P342)

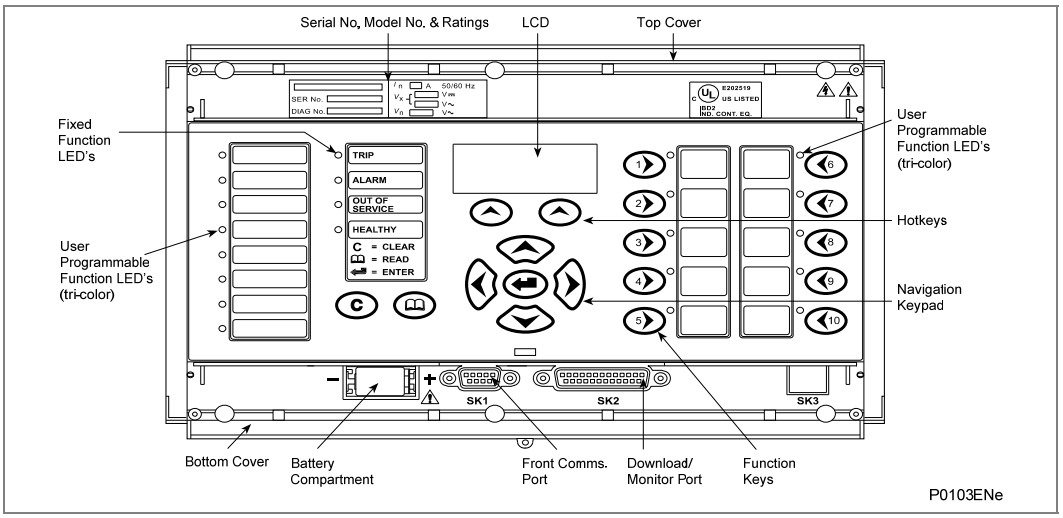

Figure 2 - Relay front view (P343/P344/P345/P346)

The front panel of the relay includes the following, as indicated in Figure 1 and Figure 2:

- A 16-character by 3-line alphanumeric Liquid Crystal Display (LCD)
- A keypad (19 keys for P343/P344/P345/P346 and 9 keys for P341/P342), comprising:
  - four arrow keys (◁ ▷ △ and ▽), an enter key (↵), a clear key (C), a read key (📖) and two hot keys (△)
  - 10 (1▷ - 10◁) programmable function keys (P343/P344/P345/P346).

    Function key functionality for the P343/P344/P345/P346. The relay front panel has control keys with programmable LEDs for local control. Factory default settings associate specific relay functions with these 10 direct-action keys and LEDs, such as **Enable** or **Disable the auto-recloser** function. Using programmable scheme logic, the user can change the default functions of the keys and LEDs to fit specific needs.
- Hotkey functionality:
  - **SCROLL** starts scrolling through the various default displays.
  - **STOP** stops scrolling the default display.
  - **Control** inputs and circuit breaker operation to control setting groups.
- LED indicators:
  - 4 fixed function LEDs
  - Eight user programmable function LEDs on the front panel (red for the P341/P342 and tri-color for the P343/P344/P345/P346)
  - 10 tri-color user programmable function LEDs on the right hand side associated with the function keys (P343/P344/P345/P346).
- Under the top hinged cover:
  - The relay's serial number.
  - The relay's current and voltage rating information
- Under the bottom hinged cover:
  - Compartment for a ½ AA-size backup battery used for the real time clock and event, fault, and disturbance records.

- A 9-pin female D-type front port for a connection of up to 15 m between a PC and the relay using an EIA(RS)232 serial data connection.
- A 25-pin female D-type parallel port for monitoring internal signals and downloading high-speed local software and language text.

1.2.1 LED Indications

1.2.1.1 Fixed Function

The four fixed function LEDs on the left-hand side of the front panel indicate the following conditions:

- **Trip (Red)** switches ON when the relay issues a trip signal. It is reset when the associated fault record is cleared from the front display. Also the trip LED can be configured as self-resetting.
- **Alarm (Yellow)** flashes when the relay registers an alarm. This may be triggered by a fault, event or maintenance record. The LED flashes until the alarms have been accepted (read), then changes to constantly ON. When the alarms are cleared, the LED switches OFF.
- **Out of service (Yellow)** is ON when the relay's protection is unavailable.
- **Healthy (Green)** is ON when the relay is in correct working order, and should be ON at all times. It goes OFF if the relay's self-tests show there is an error in the relay's hardware or software. The state of the healthy LED is reflected by the watchdog contacts at the back of the relay.

To adjust the LCD contrast, from the **CONFIGURATION** column, select **LCD Contrast**. This is only needed in very hot or cold ambient temperatures.

1.2.1.2 Programmable LEDs

P341/P342: all the programmable LEDs are RED.
P343/P344/P345/P346: all the programmable LEDs are tri-color and can be programmed to indicate RED, YELLOW or GREEN depending on the requirements.

The eight programmable LEDs are suitable for programming alarm indications and the default indications and functions are indicated in Table 1.

P343/P344/P345/P346: the 10 programmable LEDs associated with the function keys, show the status of the associated pushbutton's function. The default indications are shown in Table 1.

LED No	Default Color	P341	P342	P343/P344/P345/P346
1	Red	Earth Fault Trip -IN>1/2/3/4 Trip, ISEF>1/2/3/4 Trip, /IREF>Trip, VN>1/2/3/4 Trip	Earth Fault Trip -IN>1/2/ISEF>1/IREF>/VN>1/2/3/4/64R R<2 Trip	Earth Fault Trip -IN>1/2/ISEF>1/IREF>/VN>1/2/3/4/5/6/100% ST EF 3H/64S I>1/64S R<2 Trip/64R R<2 Trip
2	Red	Overcurrent Trip - I>1/2 Trip (3x software), I>1/2/3/4 Trip (7x software)	Overcurrent Trip - I>1/2/3/4/V Dep OC Trip	Overcurrent Trip - I>1/2/3/4/V Dep OC Trip
3	Red	Overcurrent Trip - I>3/4 Trip (3x software), DLR I>1/2/3/4/5/6 Trip (7x software)	Field Failure Trip - Field Fail 1/2 Trip	Field Failure Trip - Field Fail 1/2 Trip
4	Red	df/dt>1/2/3/4 Trip and V Shift Trip	I2> Trip - I2>1/2/3/4/NPS Thermal Trip	I2> Trip - I2>1/2/3/4/NPS Thermal Trip
5	Red	Voltage Trip - V>1/2 trip, V<1/2 Trip, V2>1 Trip	Voltage Trip - V>2/V<2/V2>1 Trip	Voltage Trip - V>2/V<2/V2>1 Trip
6	Red	Frequency Trip - F>1/2 Trip, F<1/2/3/4 Trip	Frequency Trip - F>2/F<4/Freq Band 1/2/3/4/5/6 Trip	Frequency Trip - F>2/F<4/Freq Band 1/2/3/4/5/6 Trip
7	Green	Not used	Power Trip - Power 1/SPower 1 Trip	Power Trip - Power 1/SPower 1 Trip
7	Red	Power Trip - Power 1/2 Trip, SPower 1/2 Trip	Not used	Not used
8	Red	Any Start	Any Start	Any Start
F1	Red	Not used	Not used	Not used
F2	Yellow	Not used	Not used	Not used
F3	Yellow	Not used	Not used	Not used
F4	Red	Not used	Inhibit Turbine Abnormal Frequency Protection	Inhibit Turbine Abnormal Frequency Protection
F5	Red	Not used	Setting Group 2 Enabled	Setting Group 2 Enabled
F6	Red	Not used	Not used	Not used
F7	Red	Not used	Reset NPS Thermal State to 0	Reset NPS Thermal State to 0
F8	Red	Not used	Reset Thermal Overload State to 0	Reset Thermal Overload State to 0
F9	Yellow	Not used	Reset Latched LEDs and Relay Contacts	Reset Latched LEDs and Relay Contacts
F10	Yellow	Not used	Manual Trigger Disturbance Recorder	Manual Trigger Disturbance Recorder

Table 1 - Default LED mappings for P341/P342/P343/P344/P345/P346

1.3 Relay Rear Panel

Figure 3 shows the rear panel of the relay. All current and voltage signals, digital logic input signals and output contacts are connected at the rear of the relay. Also connected at the rear is the twisted pair wiring for the rear EIA(RS)485 communication port, the IRIG-B time synchronizing input and the optical fiber rear communication port which are both optional.

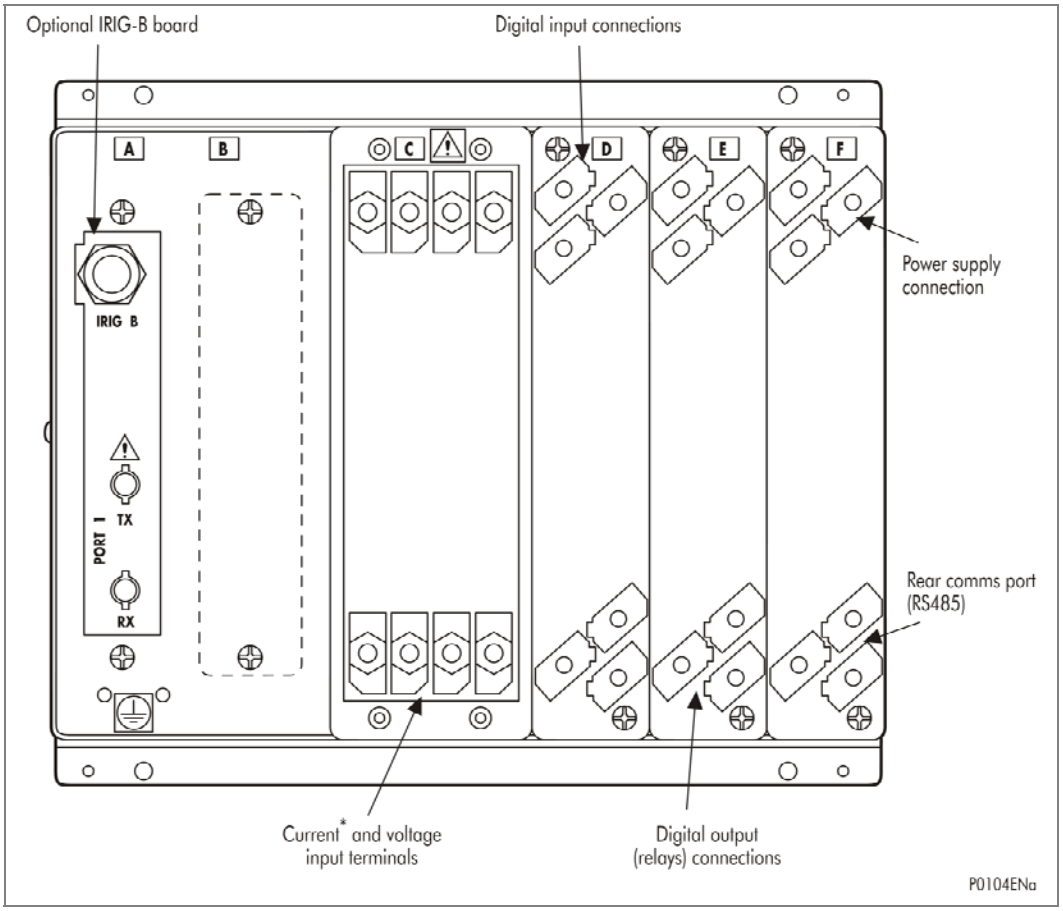

Figure 3 - Relay rear view

See the wiring diagrams in the *Installation* chapter for complete connection details.

2 RELAY CONNECTION AND POWER-UP

Before powering-up the relay, confirm that the relay power supply voltage and nominal ac signal magnitudes are appropriate for your application. The relay serial number, and its current, voltage and power rating are under the top hinged cover. The relay is available in the auxiliary voltage versions which are specified in Table 2.

Product(s)	Nominal ranges	Operative dc range	Operative ac range
All	24 - 48 V dc	19 to 65 V	-
All	48 - 110 V dc (40 - 100 V ac rms) **	37 to 150 V	32 to 110 V
All	110 - 250 V dc (100 - 240 V ac rms) **	87 to 300 V	80 to 265 V
P391 only	48 - 250 V dc, (100 - 230 V ac rms) **	48 to 300 V	85 to 253 V
** rated for ac or dc operation			
Note *The label does not specify the logic input ratings.*			

Table 2 - Nominal dc and ac ranges

The relay has universal opto isolated logic inputs. These can be programmed for the nominal battery voltage of the circuit where they are used. See the Universal opto isolated logic inputs in the *Firmware* chapter for more information on logic input specifications.

Note *The opto inputs have a maximum input voltage rating of 300 V dc at any setting.*

Once the ratings have been verified for the application, connect external power according to the power requirements specified on the label. See the external connection diagrams in the *Installation* chapter for complete installation details, ensuring the correct polarities are observed for the dc supply.

3 USER INTERFACES AND SETTINGS OPTIONS

The relay has the following user interfaces:

- The front panel using the LCD and keypad
- The front port which supports Courier communication
- The rear port which supports one protocol of either Courier, MODBUS, IEC 60870-5-103, DNP3.0 or IEC 61850. The protocol for the rear port must be specified when the relay is ordered
- A second rear port (option) which supports Courier communication

Table 3 shows the measurement information and relay settings which are accessible from the interfaces:

	Keypad/ LCD	Courier	MODBUS	IEC 870-5-103	IEC 61850-8-1	DNP3.0
Display & modification of all settings	•	•	•			
Digital I/O signal status	•	•	•	•	•	•
Display/extraction of measurements	•	•	•	•	•	•
Display/extraction of fault records	•	•	•	•		•
Extraction of disturbance records		•	•	•	•	
Programmable scheme logic settings		•				
Reset of fault & alarm records	•	•	•	•	•	•
Clear event & fault records	•	•	•			•
Time synchronization		•	•	•	•	•
Control commands	•	•	•	•	•	•

Table 3 - Accessible measurement information and relay settings

4 MENU STRUCTURE

The menu is arranged in a table. Each setting in the menu is known as a cell, and each cell in the menu can be accessed using a row and column address. The settings are arranged so that each column contains related settings, for example all of the disturbance recorder settings are contained within the same column. As shown in Figure 4, the top row of each column contains the heading that describes the settings in that column. You can only move between the columns of the menu at the column heading level. For a complete list of all of the menu settings, see the *Settings* chapter and the *Relay Menu Database* document.

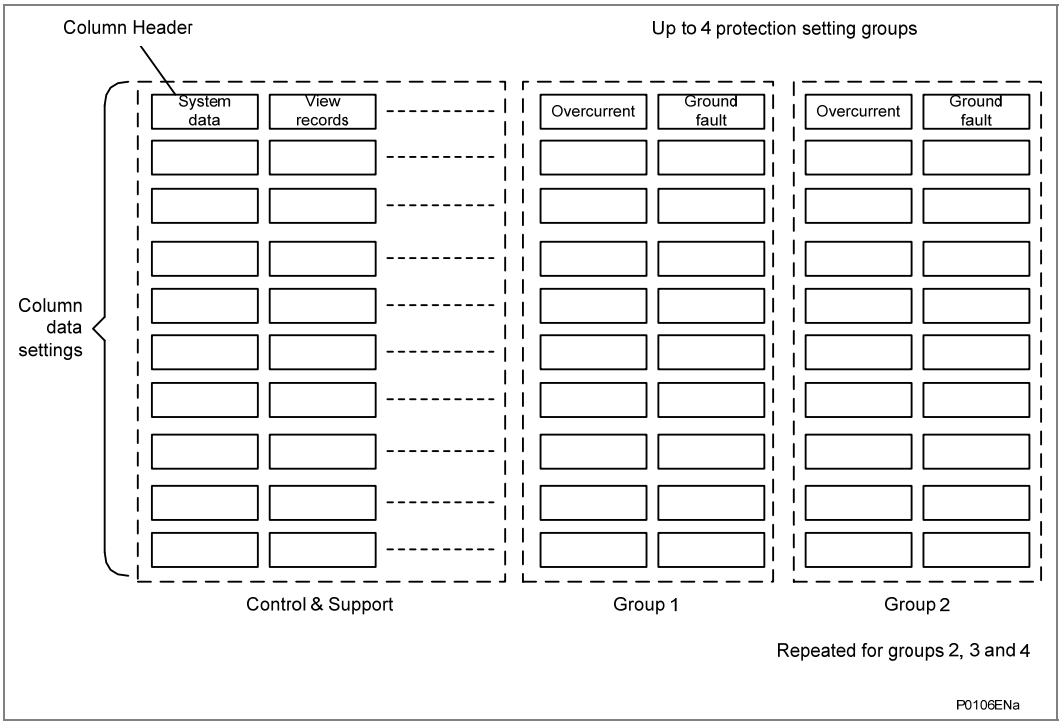

Figure 4 - Menu structure

The settings in the menu are in these categories:

- protection settings
- Disturbance Recorder settings
- Control and Support (C&S) settings

New C&S settings are stored and used by the relay immediately after they are entered. New Protection settings or disturbance recorder settings are stored in a temporary 'scratchpad'. Once the new settings have been confirmed, the relay activates all the new settings together. This provides extra security so that several setting changes, made in a group of protection settings, all take effect at the same time.

4.1 Protection Settings

The protection settings include the following items:

- Protection element settings
- Scheme logic settings

There are four groups of protection settings, with each group containing the same setting cells. One group of protection settings is selected as the active group, and is used by the protection elements.

4.2 Disturbance Recorder Settings

The disturbance recorder settings include the record duration and trigger position, selection of analog and digital signals to record, and the signal sources that trigger the recording.

4.3 Control and Support Settings

The control and support settings include:

- Relay configuration settings
- Open/close circuit breaker (may vary according to relay type/model)
- CT & VT ratio settings
- Reset LEDs
- Active protection setting group
- Password & language settings
- Circuit breaker control & monitoring settings (may vary according to relay type/model)
- Communications settings
- Measurement settings
- Event & fault record settings
- User interface settings
- Commissioning settings

5 PASSWORD PROTECTION

The menu structure contains three access levels. The access level that is enabled determines which of the relay's settings can be changed and is controlled by two different passwords. The access levels are summarized in Table 4.

Set "Password Control" Cell To	"Access Level" Cell Displays	Operations	Password type required
0	0	**Read** - Access to all settings, alarms, event records and fault records	None
		Execute - Control Commands, e.g. circuit breaker open/close. Reset of fault and alarm conditions. Reset LEDs. Clearing of event and fault records	Level 1
		Edit - All other settings	Level 2
1	1	**Read** - Access to all settings, alarms, event records and fault records	None
		Execute - Control Commands, e.g. circuit breaker open/close. Reset of fault and alarm conditions. Reset LEDs. Clearing of event and fault records	None
		Edit - All other settings	Level 2
2 (Default)	2 (Default)	**Read** - Access to all settings, alarms, event records and fault records	None
		Execute - Control Commands, e.g. circuit breaker open/close. Reset of fault and alarm conditions. Reset LEDs. Clearing of event and fault records	None
		Edit - All other settings	None

Table 4 - Access levels

Each of the two passwords are four characters of upper-case text. The factory default for both passwords is AAAA. Each password is user-changeable once it has been correctly entered. To enter a password, either use the prompt when a setting change is attempted, or select **System data > Password** from the menu. The access level is independently enabled for each interface, therefore if level 2 access is enabled for the rear communication port, the front panel access remains at level 0 unless the relevant password is entered at the front panel.

The access level, enabled by the password, times out independently for each interface after a period of inactivity and reverts to the default level. If the passwords are lost, contact Schneider Electric with the relay's serial number and an emergency password can be supplied. To find the current level of access enabled for an interface, select **System data > Access level**. The access level for the front panel User Interface (UI) is one of the default display options.

The relay is supplied with a default access level of 2, so that no password is needed to change any of the relay settings. It is also possible to set the default menu access level to either level 0 or level 1, preventing write access to the relay settings without the correct password. The default menu access level is set in **System data > Password control**.

6 RELAY CONFIGURATION

The relay is a multi-function device that supports numerous different protection, control and communication features. To simplify the setting of the relay, there is a configuration settings column which can be used to enable or disable many of the functions of the relay. The settings associated with any function that is disabled are not shown in the menu. To disable a function change the relevant cell in the **Configuration** column from **Enabled** to **Disabled**.

The configuration column controls which of the four protection settings groups is selected as active through the **Active settings** cell. A protection setting group can also be disabled in the configuration column, provided it is not the present active group. Similarly, a disabled setting group cannot be set as the active group.

7 FRONT PANEL USER INTERFACE (KEYPAD AND LCD)

When the keypad is exposed it provides full access to the menu options of the relay, with the information displayed on the LCD. The ⟨ ⟩ ⌃ and ⌄ keys are used for menu navigation and setting value changes. These keys have an auto-repeat function if they are held continually. This can speed up both setting value changes and menu navigation: the longer the key is held pressed, the faster the rate of change or movement.

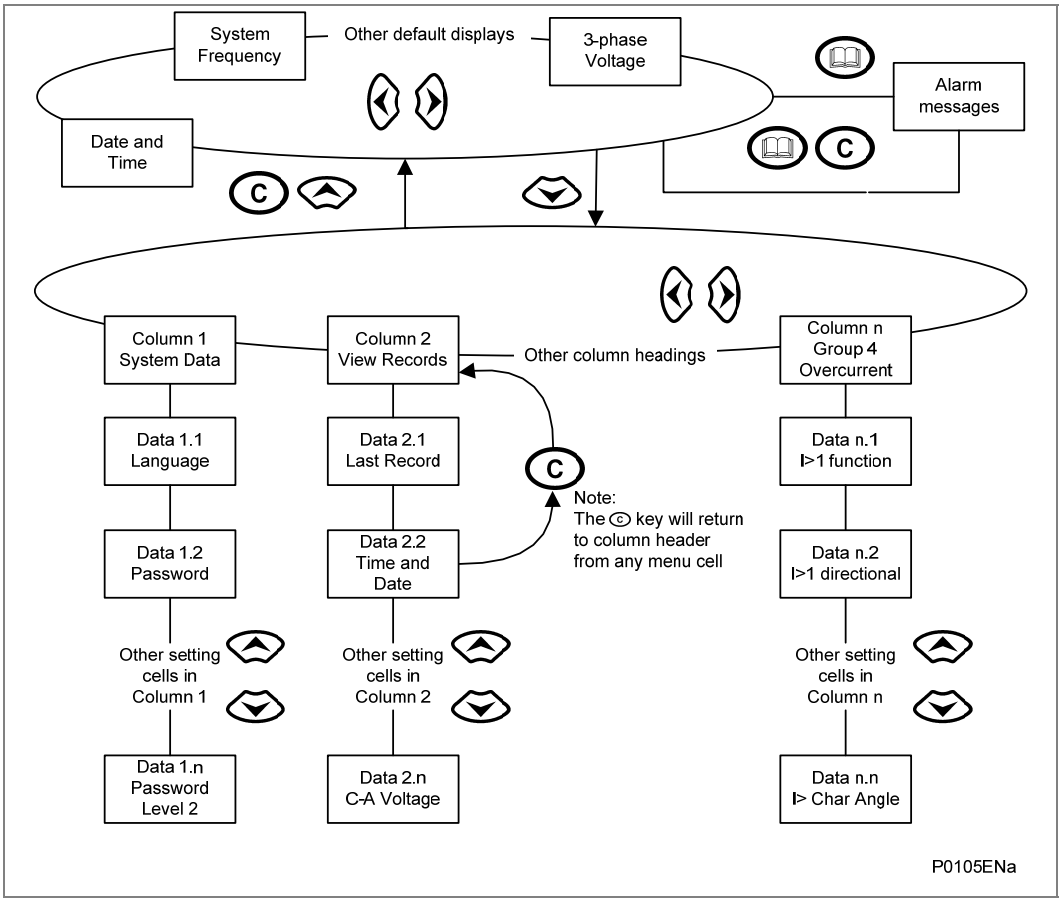

Figure 5 - Front panel user interface

7.1 Default Display and Menu Time-Out

The front panel menu has a default display. To change it, select **Measure't. setup > default display** and the following items can be selected:

- Date and time
- Relay description (user defined)
- Plant reference (user defined)
- System frequency
- 3-phase voltage
- 3-phase and neutral current
- Power
- Access level

From the default display you can view the other default display options using the ⟨ and ⟩ keys. If there is no keypad activity for 15 minutes, the default display reverts to the previous setting and the LCD backlight switches off. Any setting changes that have not been confirmed are lost and the original setting values are maintained.

Whenever there is an uncleared alarm present in the relay (e.g. fault record, protection alarm, control alarm etc.) the default display will be replaced by:

```
Alarms/Faults
Present
```

Enter the menu structure of the relay from the default display, even if the display shows the **Alarms/Faults** present message.

7.2 Navigating Menus and Browsing the Settings

Use the four arrow keys to browse the menu, following the structure shown in Figure 5.

1. Starting at the default display, press the ⌃ key to show the first column heading.
2. Use the ⟨ and ⟩ keys to select the required column heading.
3. Use the ⌄ and ⌃ keys to view the setting data in the column.
4. To return to the column header, either hold the ⌃ key down or press the clear key ⓒ once. It is only possible to move across columns at the column heading level.
5. To return to the default display, press the ⌃ key or the clear key ⓒ from any of the column headings. If you use the auto-repeat function of the ⌃ key, you cannot go straight to the default display from one of the column cells because the auto-repeat stops at the column heading.
6. Press the ⌃ key again to go to the default display.

7.3 Navigating the Hotkey Menu

1. To access the hotkey menu from the default display, press the key directly below the **HOTKEY** text on the LCD.
2. Once in the hotkey menu, use the ⟨ and ⟩ keys to scroll between the available options, then use the hotkeys to control the function currently displayed.

   If neither the ⟨ or ⟩ keys are pressed within 20 seconds of entering a hotkey sub-menu, the relay reverts to the default display.
3. Press the clear key ⓒ to return to the default menu from any page of the hotkey menu.

   The layout of a typical page of the hotkey menu is as follows:

   - The top line shows the contents of the previous and next cells for easy menu navigation
   - The center line shows the function
   - The bottom line shows the options assigned to the direct access keys

   The functions available in the hotkey menu are listed below:

7.3.1 Setting Group Selection

To select the setting group, scroll through the available setting groups using **NXT GRP**, or press **SELECT** to select the setting group that is currently displayed.

When you press **SELECT**, the current setting group appears for 2 seconds, then the **NXT GRP** or **SELECT** options appear again.

To exit the sub menu, use the left and right arrow keys. For more information see Changing setting groups in the *Operation* chapter.

7.3.2 Control Inputs - User Assignable Functions

The control inputs are user-assignable functions or **USR ASS**.

Use the **CTRL I/P CONFIG** column to configure the number of **USR ASS** shown in the hotkey menu. To **SET/RESET** the chosen inputs, use the **HOTKEY** menu.

For more information see the Control Inputs section in the *Operation* chapter.

7.3.3 CB Control

The CB control functionality varies from one relay to another (CB control is included in the P341/P342/P343/P344/P345/P346). For a detailed description of the CB control via the hotkey menu refer to the “Circuit breaker control” section of the *Operation* chapter.

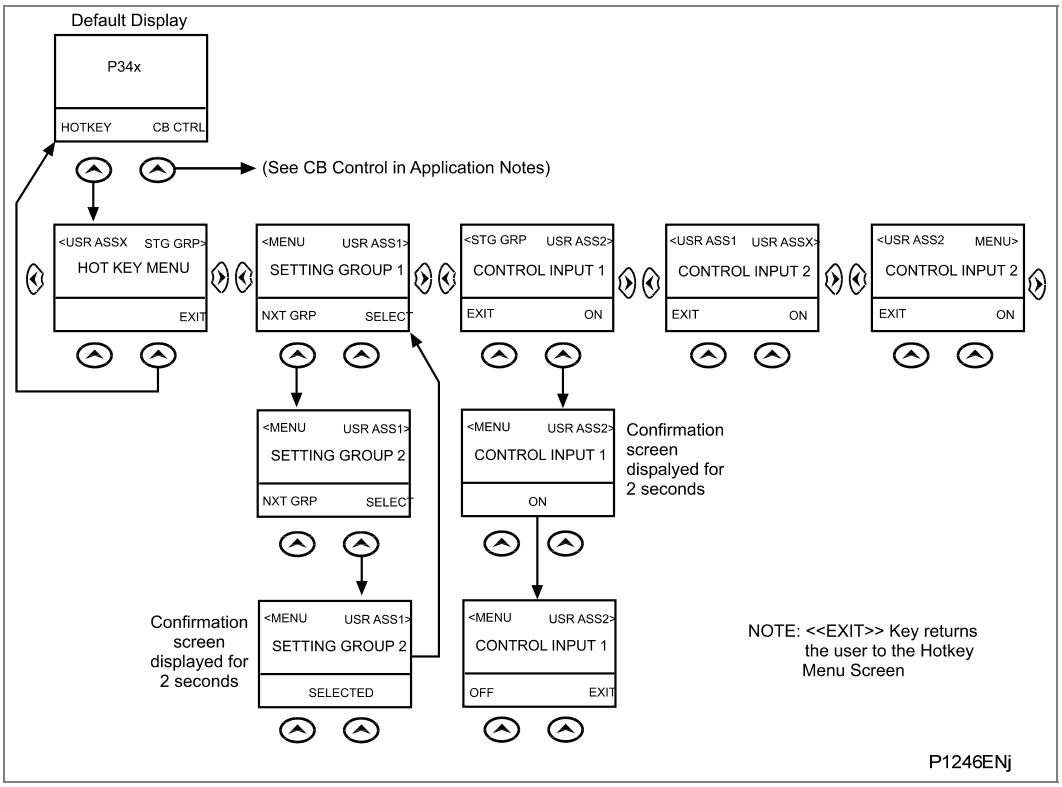

Figure 6 - Hotkey menu navigation

7.4 Password Entry

1. When a password is required to edit a setting, an **Enter password** prompt appears.

```
Enter password
**** Level 1
```

2. A flashing cursor shows which character field of the password can be changed. Press the ⊕ and ⊖ keys to change each character between A and Z.

3. Use the ⊲ and ⊳ keys to move between the character fields of the password. Press the enter key ↵ to confirm the password.

   If an incorrect password is entered, the display reverts to **Enter password**. A message then appears indicating that the password is correct and if so what level of access has been unlocked. If this level is sufficient to edit the selected setting, the display returns to the setting page to allow the edit to continue. If the correct level of password has not been entered, the password prompt page appears again.

4. To escape from this prompt press the clear key ⓒ. Alternatively, enter the password using **System data > Password**.

   If the keypad is inactive for 15 minutes, the password protection of the front panel user interface reverts to the default access level.

5. To manually reset the password protection to the default level, select **System data > Password**, then press the clear key ⓒ instead of entering a password.

7.5 Reading and Clearing of Alarm Messages and Fault Records

One or more alarm messages appear on the default display and the yellow alarm LED flashes. The alarm messages can either be self-resetting or latched, in which case they must be cleared manually.

1. To view the alarm messages, press the read key 📖. When all alarms have been viewed but not cleared, the alarm LED change from flashing to constantly ON and the latest fault record appears (if there is one).

2. Scroll through the pages of the latest fault record, using the 📖 key. When all pages of the fault record have been viewed, the following prompt appears.

```
Press clear to
reset alarms
```

3. To clear all alarm messages, press ⓒ. To return to the display showing alarms or faults present, and leave the alarms uncleared, press 📖.

4. Depending on the password configuration settings, you may need to enter a password before the alarm messages can be cleared. See section 5.

5. When all alarms are cleared, the yellow alarm LED switches OFF; also the red trip LED switches OFF if it was switched ON after a trip.

6. To speed up the procedure, enter the alarm viewer using the 📖 key, then press the ⓒ key. This goes straight to the fault record display. Press ⓒ again to move straight to the alarm reset prompt, then press ⓒ again to clear all alarms.

7.6 Setting Changes

1. To change the value of a setting, go to the relevant cell in the menu, then press the enter key ⏎ to change the cell value. A flashing cursor on the LCD shows the value can be changed. If a password is required to edit the cell value, a password prompt appears.
2. To change the setting value, press the ⌄ or ⌃ keys. If the setting to be changed is a binary value or a text string, select the required bit or character to be changed using the ‹ and › keys.
3. Press ⏎ to confirm the new setting value or the clear key ⓒ to discard it. The new setting is automatically discarded if it is not confirmed in 15 seconds.
4. For protection group settings and disturbance recorder settings, the changes must be confirmed before they are used by the relay.

   To do this, when all required changes have been entered, return to the column heading level and press the ⌄ key. Before returning to the default display, the following prompt appears.

   ```
   Update settings?
   Enter or clear
   ```

5. Press ⏎ to accept the new settings or press ⓒ to discard the new settings.

Note	*If the menu time-out occurs before the setting changes have been confirmed, the setting values are also discarded.*

Control and support settings are updated immediately after they are entered, without the **Update settings?** prompt.

8 FRONT COMMUNICATION PORT USER INTERFACE

The front communication port is a 9-pin female D-type connector under the bottom hinged cover. It provides EIA(RS)232 serial data communication up to 15 m with a PC, see Figure 7. This port supports the Courier communication protocol only. Courier is the communication language developed by Schneider Electric to allow communication with its range of protection relays. The front port is intended for use with the relay settings program S1 Studio which runs on Windows™ 2000 or XP.

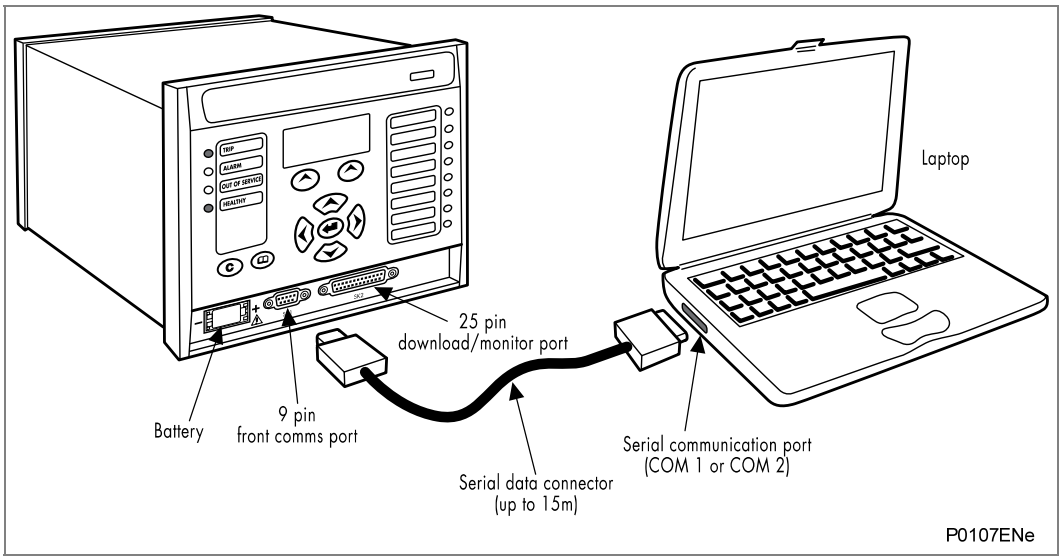

Figure 7 - Front port connection

The relay is a Data Communication Equipment (DCE) device with the following pin connections on the 9-pin front port.

Pin number	Description
2	Tx Transmit data
3	Rx Receive data
5	0 V Zero volts common

Table 5 - Front port DCE pin connections

None of the other pins are connected in the relay. The relay should be connected to the COM1 or COM2 serial port of a PC. PCs are normally Data Terminal Equipment (DTE) devices which have the following serial port pin connections (if in doubt check your PC manual):

Pin number	25-way	9-way	Description
2	3	2	x Receive data
3	2	3	Tx Transmit data
5	7	5	0 V Zero volts common

Table 6 - DTE devices serial port pin connections

For successful data communication, connect the Tx pin on the relay to the Rx pin on the PC, and the Rx pin on the relay to the Tx pin on the PC. Normally a straight-through serial cable is required, connecting pin 2 to pin 2, pin 3 to pin 3, and pin 5 to pin 5.

Note	*A common cause of difficulty with serial data communication is connecting Tx to Tx and Rx to Rx. This could happen if a cross-over serial cable is used, connecting pin 2 to pin 3, and pin 3 to pin 2, or if the PC has the same pin configuration as the relay.*

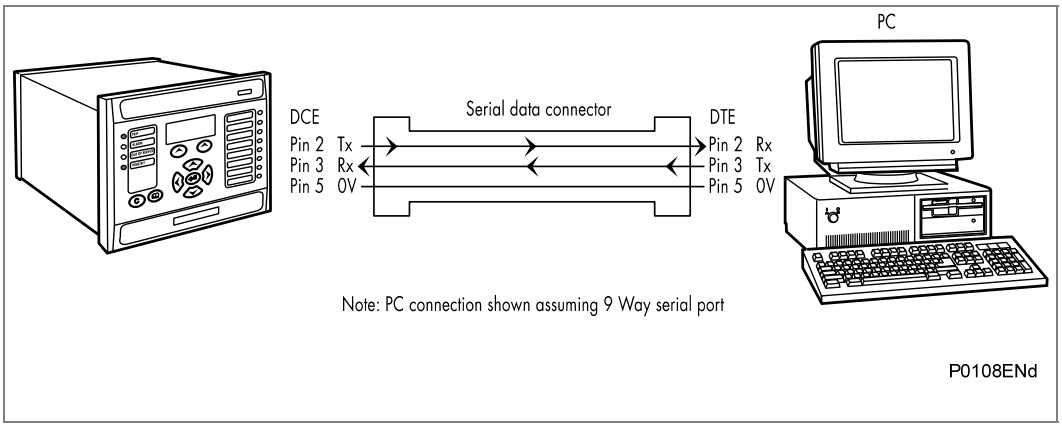

Figure 8 - PC relay signal connection

Once the physical connection from the relay to the PC is made, the PC's communication settings must be set to match those of the relay. The following table shows the relay's communication settings for the front port.

Protocol	Courier
Baud rate	19,200 bits/s
Courier address	1
Message format	11 bit - 1 start bit, 8 data bits, 1 parity bit (even parity), 1 stop bit

Table 7 - Relay front port settings

If there is no communication using the front port for 15 minutes, any password access level that has been enabled is cancelled.

8.1 Front Courier Port

The front EIA(RS)232 9-pin port supports the Courier protocol for one-to-one communication.

Note	*The front port is actually compliant to EIA(RS)574; the 9-pin version of EIA(RS)232, see www.tiaonline.org.*

The front port is designed for use during installation and commissioning or maintenance, and is not suitable for permanent connection. Since this interface is not used to link the relay to a substation communication system, the following features of Courier are not used.

- Automatic Extraction of Event Records:
  - Courier Status byte does not support the Event flag
  - Send Event or Accept Event commands are not implemented
- Automatic Extraction of Disturbance Records:
  - Courier Status byte does not support the Disturbance flag
- Busy Response Layer:
  - Courier Status byte does not support the Busy flag, the only response to a request will be the final data
- Fixed Address:
  - The address of the front courier port is always 1, the Change Device address command is not supported.
- Fixed Baud Rate:
  - 19200 bps

Note	*Although automatic extraction of event and disturbance records is not supported, this data can be manually accessed using the front port.*

9 MICOM S1 STUDIO RELAY COMMUNICATIONS BASICS

The EIA(RS)232 front communication port is intended for use with the relay settings program MiCOM S1 Studio. This program runs on Windows™ 2000, XP or Vista, and is the universal MiCOM IED Support Software used for direct access to all stored data in any MiCOM IED.

MiCOM S1 Studio provides full access to:

- MiCOM Px10, Px20, Px30, Px40, Modulex series, K series, L series relays
- MiCOM Mx20 measurements units

9.1 PC Requirements

To run MiCOM S1 Studio on a PC, the following requirements are advised:

- Minimum
  - 1 GHz processor
  - 256 MB RAM
  - Windows™ 2000
  - Resolution 800 x 600 x 256 colors
  - 1 GB free hard disk space
- Recommended
  - 2 GHz processor
  - 1 GB RAM
  - Windows™ XP
  - Resolution 1024 x 768
  - 5 GB free hard disk space
- Microsoft Windows™ Vista
  - 2 GHz processor
  - 1 GB RAM
  - 5 GB free hard disk space
- MiCOM S1 Studio must be started with Administrator rights

9.2 Connecting to the Relay using MiCOM S1 Studio

This section is intended as a quick start guide to using MiCOM S1 Studio and assumes you have a copy installed on your PC. See the MiCOM S1 Studio program online help for more detailed information.

1. Make sure the EIA(RS)232 serial cable is properly connected between the port on the front panel of the relay and the PC.
2. To start **MiCOM** S1 Studio, select **Programs** > **and navigate to** > **MiCOM S1 Studio** > **MiCOM S1 Studio**.
3. Click the **Quick Connect** tab and select **Create a New System**.
4. Check the **Path to System file** is correct, then enter the name of the system in the **Name** field. If you need to add a brief description of the system, use the **Comment** field.
5. Click **OK**.
6. Select the device type.
7. Select the communications port.
8. Once connected, select the language for the settings file, the device name, then click **Finish**. The configuration is updated.
9. In the **Studio Explorer** window, select **Device** > **Supervise Device**… to control the relay directly.

9.3 Off-Line Use of MiCOM S1 Studio

MiCOM S1 Studio can also be used as an off-line tool to prepare settings, without access to the relay.

1. If creating a new system, in the Studio Explorer, select **create new** system. Then right-click the new system and select **New substation**.
2. Right-click the new substation and select **New voltage level**.
3. Then right-click the new voltage level and select **New bay**.
4. Then right-click the new bay and select **New device**.

   You can add a device at any level, whether it is a system, substation, voltage or bay.
5. Select a device type from the list, then enter the relay type, such as P445. Click **Next**.
6. Enter the full model number and click **Next**.
7. Select the **Language** and **Model**, then click **Next**.
8. Enter a unique device name, then click **Finish**.
9. Right-click the **Settings** folder and select **New File**. A default file **000** is added.
10. Right-click file **000** and select click **Open**. You can then edit the settings. See the MiCOM S1 Studio program online help for more information.

Notes:

SETTINGS

CHAPTER 4

Date:	February 2012
Hardware Suffix:	J (P341)
Software Version:	36 and 71 (with DLR)
Connection Diagrams:	10P341xx (xx = 01 to 12)

CONTENTS

FIGURES

TABLES

Notes:

1 INTRODUCTION

The P341 must be configured to the system and application using appropriate settings. In this chapter settings are described in sequence: protection settings, control and configuration settings and the disturbance recorder settings. The relay is supplied with a factory-set configuration of default settings.

2 RELAY SETTINGS CONFIGURATION

The relay is a multi-function device that supports numerous different protection, control and communication features. To simplify the setting of the relay, there is a configuration settings column which can be used to enable or disable many of the functions of the relay. The settings associated with any function that is disabled are made invisible; i.e. they are not shown in the menu. To disable a function change the relevant cell in the *Configuration* column from *Enabled* to *Disabled*.

The configuration column controls which of the four protection settings groups is selected as active through the *Active settings* cell. A protection setting group can also be disabled in the configuration column, provided it is not the present active group. Similarly, a disabled setting group cannot be set as the active group.

The configuration column also allows all of the setting values in one group of protection settings to be copied to another group.

To do this first set the *Copy from* cell to the protection setting group to be copied, then set the *Copy to* cell to the protection group where the copy is to be placed. The copied settings are initially placed in a temporary scratchpad and will only be used by the relay following confirmation.

To restore the default values to the settings in any protection settings group, set the *Restore Defaults* cell to the relevant group number. Alternatively it is possible to set the *Restore Defaults* cell to *All Settings* to restore the default values to all of the relay's settings, not just the protection groups' settings. The default settings are initially placed in the scratchpad and are only used by the relay after they have been confirmed.

Note	*That restoring defaults to all settings includes the rear communication port settings may result in communication via the rear port being disrupted if the new (default) settings do not match those of the master station.*

Menu text	Default setting	Available settings
Restore Defaults	No Operation	No Operation All Settings Setting Group 1 Setting Group 2 Setting Group 3 Setting Group 4
Setting to restore a setting group to factory default settings.		
Setting Group	Select via Menu	Select via Menu Select via PSL
Allows setting group changes to be initiated via 2 DDB signals in the programmable scheme logic or via the Menu settings.		
Active Settings	Group 1	Group 1, Group 2, Group 3, Group 4
Selects the active setting group.		
Save Changes	No Operation	No Operation, Save, Abort
Saves all relay settings.		
Copy from	Group 1	Group 1, 2, 3, 4
Allows displayed settings to be copied from a selected setting group.		
Copy to	No Operation	No Operation Group 1, 2, 3, 4
Allows displayed settings to be copied to a selected setting group. (ready to paste).		
Setting Group 1	Enabled	Disabled, Enabled
To enable or disable Group 1 settings. If the setting group is disabled from the configuration, then all associated settings and signals are hidden, with the exception of this setting. (paste).		
Setting Group 2 (as above)	Disabled	Disabled, Enabled

Menu text	Default setting	Available settings
Setting Group 3 (as above)	Disabled	Disabled, Enabled
Setting Group 4 (as above)	Disabled	Disabled, Enabled
System Config	Visible	Invisible, Visible
Sets the System Config menu visible or invisible in the relay settings menu.		
Power	Enabled	Disabled, Enabled
Enables (activates) or disables (turns off) the 3 phase Power Protection function, reverse power / low forward power / over power. ANSI 32R/32LFP/32O.		
Overcurrent	Enabled	Disabled, Enabled
Enables (activates) or disables (turns off) the Phase Overcurrent and NPS Overcurrent Protection function. ANSI 50/51/67P, 46OC.		
Thermal Overload	Disabled	Disabled, Enabled
Enables (activates) or disables (turns off) the Thermal Overload Protection function. ANSI 49.		
Earth Fault	Enabled	Disabled, Enabled
Enables (activates) or disables (turns off) the Earth Fault Protection function. ANSI 50N/51N.		
SEF/REF/SPower	SEF/REF	Disabled, SEF/REF, Sensitive Power
Enables (activates) or disables (turns off) the Sensitive Earth Fault or Restricted Earth Fault or Sensitive Power (1 Phase) Protection (reverse power / low forward power / over power) function. ANSI 50/51/67N, 64, 32R/32LFP/32O.		
Residual O/V NVD	Enabled	Disabled, Enabled
Enables (activates) or disables (turns off) the Residual Overvoltage (Neutral Voltage Displacement) Protection function. ANSI 59N.		
df/dt	Enabled	Disabled, Enabled
Enables (activates) or disables (turns off) the rate of change of frequency df/dt) Protection function. ANSI 81R.		
V Vector Shift	Disabled	Disabled, Enabled
Enables (activates) or disables (turns off) the Voltage Vector Shift Protection function.		
Reconnect Delay	Disabled	Disabled, Enabled
Enables (activates) or disables (turns off) the Reconnect Delay Protection function.		
Volt Protection	Enabled	Disabled, Enabled
Enables (activates) or disables (turns off) the Voltage Protection (Under/Overvoltage and NPS Overvoltage) protection function. ANSI 27/59/47.		
Freq Protection	Enabled	Disabled, Enabled
Enables (activates) or disables (turns off) the Frequency Protection (Under/Overfrequency) protection function. ANSI 81O/U.		
CB Fail	Disabled	Disabled, Enabled
Enables (activates) or disables (turns off) the Circuit Breaker Fail Protection function. ANSI 50BF.		
Supervision	Disabled	Disabled, Enabled
Enables (activates) or disables (turns off) the Supervision (VTS&CTS) functions. ANSI VTS/CTS.		
Dynamic Rating	Enabled	Disabled, Enabled
Enables (activates) or disables (turns off) the Dynamic Rating protection function.		

Menu text	Default setting	Available settings
Input Labels	Visible	Invisible, Visible
Sets the Input Labels menu visible or invisible in the relay settings menu.		
Output Labels	Visible	Invisible, Visible
Sets the Output Labels menu visible or invisible in the relay settings menu.		
CT & VT Ratios	Visible	Invisible, Visible
Sets the Current & Voltage Transformer Ratios menu visible in the relay settings menu.		
Record Control	Visible	Invisible, Visible
Sets the Record Control menu visible or invisible in the relay settings menu		
Disturb Recorder	Visible	Invisible, Visible
Sets the Disturbance Recorder menu visible or invisible in the relay settings menu		
Measure't Setup	Visible	Invisible, Visible
Sets the Measurement Setup menu visible or invisible in the relay settings menu		
Comms Settings	Visible	Invisible, Visible
Sets the Communications Settings menu visible or invisible in the relay settings menu. These are the settings associated with the 1st and 2nd rear communications ports.		
Commission Tests	Visible	Invisible, Visible
Sets the Commissioning Tests menu visible or invisible in the relay settings menu		
Setting Values	Primary	Primary, Secondary
This affects all protection settings that are dependent upon CT and VT ratio's.		
Control Inputs	Visible	Invisible, Visible
Sets the Control Inputs menu visible or invisible in the relay settings menu		
CLIO Inputs	Enabled	Disabled, Enabled
Enables (activates) or disables (turns off) the CLIO (Current Loop Input Output) Inputs function.		
CLIO Outputs	Enabled	Disabled, Enabled
Enables (activates) or disables (turns off) the CLIO (Current Loop Input Output) Outputs function.		
System Checks	Disabled	Disabled, Enabled
To enable (activate) or disable (turn off) the System Checks (Check Sync and Voltage Monitor) function. ANSI 25.		
Ctrl I/P Config	Visible	Invisible, Visible
Sets the Control Input Configuration menu visible or invisible in the relay settings menu		
Ctrl I/P Labels	Visible	Invisible, Visible
Sets the Control Input Labels visible or invisible in the relay settings menu		
Direct Access	Enabled	Enabled/Disabled/Hotkey Only/CB Cntrl Only
Defines what controls are available via the direct access keys - Enabled (Hotkey and CB Control functions) / Hotkey Only (Control Inputs and Setting group selection) / CB Cntrl Only (CB open/close).		
IEC GOOSE	Visible	Invisible, Visible
Sets the IEC GOOSE menu visible or invisible in the relay settings menu		
RP1 Read Only	Disabled	Disabled, Enabled
Enables (activates) or disables (turns off) the rear communications port 1 (RP1) Read Only function.		
RP2 Read Only	Disabled	Disabled, Enabled
Enables (activates) or disables (turns off) the rear communications port 2(RP2) Read Only function.		
NIC Read Only	Disabled	Disabled, Enabled
Enables (activates) or disables (turns off) the rear Ethernet communications port (NIC) Read Only function.		
LCD Contrast	11	0-31

Menu text	Default setting	Available settings
Sets the LCD contrast. To confirm acceptance of the contrast setting the relay prompts the user to press the right and left arrow keys together instead of the enter key as an added precaution to someone accidentally selecting a contrast which leaves the display black or blank. *Note* *the LCD contrast can be set via the front port communications port with the S1 setting software if the contrast is set incorrectly such that the display is black or blank.*		

Table 1 - General configuration settings

3 PROTECTION SETTINGS

The protection settings include all the following items that become active once enabled in the configuration column of the relay menu database:

- Protection element settings.
- Scheme logic settings.

There are four groups of protection settings, with each group containing the same setting cells. One group of protection settings is selected as the active group, and is used by the protection elements. The settings for group 1 only are shown below. The settings are discussed in the same order in which they are displayed in the menu.

3.1 System Config

A facility is provided in the P341 to maintain correct operation of all the protection functions even when the generator is running in a reverse phase sequence. This is achieved through user configurable settings available for the four setting groups.

Menu text	Default setting	Setting range		Step size
		Min	Max	
GROUP 1: SYSTEM CONFIG				
Phase Sequence	Standard ABC	Standard ABC, Reverse ACB		N/A
The Phase Sequence setting applies to a power system that has a permanent phase sequence of either ABC or ACB. It is also applicable for temporary phase reversal which affects all the 3 phase VTs and CTs.				
VT Reversal	No Swap	No Swap, A-B Swapped, B-C Swapped, C-A Swapped		N/A
The VT Reversal and CT Reversal settings apply to applications where some or all of the 3 phase voltage or current inputs are temporarily reversed, as in pump storage applications. The settings affect the order of the analogue channels in the relay and are set to emulate the order of the channels on the power system.				
CT Reversal	No Swap	No Swap, A-B Swapped, B-C Swapped, C-A Swapped		N/A
As described above.				
C/S Input	A-N	A-N, B-N, C-N, A-B, B-C, C-A		
Selects the check synchronizing input voltage measurement.				
C/S V Ratio Corr	1	0.5	2	0.001
Check synchronizing voltage ratio correction. This is used by the System Check function to provide the magnitude correction for the difference between main VT and C/S VT.				
Main VT Vect Grp	0	0	11	1
This is used to provide vector correction for the phase shift between main VT and C/S VT.				
Main VT Location	Gen	Gen, Bus		
Selects the main voltage transformer location, Generator or Busbar.				

Table 2 - System configuration settings

3.2 Power Protection (32R/32)/32L)

The 3-phase power protection included in the P341 relay provides two stages of power protection. Each stage can be independently selected as either reverse power, over power, low forward power or disabled. The direction of operation of the power protection, forward or reverse, can also be defined with the operating mode setting.

Menu text	Default setting	Setting range		Step size
		Min	Max	
GROUP1: POWER				
Operating Mode	Generating	Generating, Motoring		
Operating mode of the power protection defining forward/reverse direction – Generating = forward power towards the busbar, Motoring = forward power towards the machine. Assumes CT connections as per standard connection diagrams.				
Power1 Function	Reverse	Disabled, Reverse, Low Forward, Over		
First stage power function operating mode.				
–P>1 Setting	20 In W (Vn=100/120 V) 80 In W (Vn=380/480 V)	4 In W (Vn=100/120 V) 16 In W (Vn=380/480 V)	300 In W (Vn=100/120 V)1200 In W (Vn=380/480 V)	1 In W (Vn=100/120 V) 4 In W (Vn=380/480 V)
Pick-up setting for the first stage reverse power protection element.				
P<1 Setting	20 In W (Vn=100/120V) 80 In W (Vn=380/480 V)	4 In W (Vn=100/120 V) 16 In W (Vn=380/480 V)	300 In W (Vn=100/120 V) 1200 In W (Vn=380/480 V)	1 In W (Vn=100/120 V) 4 In W (Vn=380/480 V)
Pick-up setting for the first stage low forward power protection element.				
P>1 Setting	120 In W (Vn=100/120 V) 480 In W (Vn=380/480 V)	4 In W (Vn=100/120 V) 16 In W (Vn=380/480 V)	300 In W (Vn=100/120 V) 1200 In W (Vn=380/480 V)	1 In W (Vn=100/120 V) 4 In W (Vn=380/480 V)
Pick-up setting for the first stage over power protection element.				
Power1 Time Delay	5 s	0 s	100 s	0 s
Operating time-delay setting of the first stage power protection.				
Power1 DO Timer	0 s	0 s	10 s	0.1 s
Drop-off time-delay setting of the first stage power protection.				
P1 Poledead Inh	Enabled	Disabled, Enabled		
If the setting is enabled, the relevant stage will become inhibited by the pole dead logic. This logic produces an output when it detects either an open circuit breaker via auxiliary contacts feeding the relay opto inputs or it detects a combination of both undercurrent and undervoltage on any one phase. It allows the power protection to reset when the circuit breaker opens to cater for line or bus side VT applications.				
Power2 Function	Low Forward	Disabled, Reverse, Low Forward, Over		
Second stage power function operating mode.				
–P>2 Setting	20 In W (Vn=100/120 V) 80 In W (Vn=380/480 V)	4 In W (Vn=100/120 V) 16 In W (Vn=380/480 V)	300 In W (Vn=100/120 V) 1200 In W (Vn=380/480 V)	1 In W (Vn=100/120 V) 4 In W (Vn=380/480 V)
Pick-up setting for the second stage reverse power protection element.				
P<2 Setting	20 In W (Vn=100/120 V) 80 In W (Vn=380/480 V)	4 In W (Vn=100/120 V) 16 In W (Vn=380/480 V)	300 In W (Vn=100/120 V) 1200 In W (Vn=380/480 V)	1 In W (Vn=100/120 V) 4 In W (Vn=380/480 V)
Pick-up setting for the second stage low forward power protection element.				

Menu text	Default setting	Setting range		Step size
		Min	Max	
P>2 Setting	120 In W (Vn=100/120 V) 480 In W (Vn=380/480 V)	4 In W (Vn=100/120 V) 16 In W (Vn=380/480 V)	300 In W (Vn=100/120 V) 1200 In W (Vn=380/480 V)	1 In W (Vn=100/120 V) 4 In W (Vn=380/480 V)
Pick-up setting for the second stage low forward power protection element.				
Power2 Time Delay	5 s	0 s	100 s	0.1 s
Operating time-delay setting of the second stage power protection.				
Power2 DO Timer	0 s	0 s	10 s	0.1 s
Drop-off time-delay setting of the second stage power protection.				
P2 Poledead Inh	Enabled	Disabled, Enabled		
If the setting is enabled, the relevant stage will become inhibited by the pole dead logic. This logic produces an output when it detects either an open circuit breaker via auxiliary contacts feeding the relay opto inputs or it detects a combination of both undercurrent and undervoltage on any one phase. It allows the power protection to reset when the circuit breaker opens to cater for line or bus side VT applications.				

Table 3 - Power protection settings

3.3 Phase Overcurrent Protection (50/51/46OC)

The overcurrent protection included in the P341 relay provides four stage non-directional / directional three-phase overcurrent protection with independent time delay characteristics. All overcurrent and directional settings apply to all three phases but are independent for each of the four stages.

The first two stages of overcurrent protection have time-delayed characteristics which are selectable between Inverse Definite Minimum Time (IDMT), or Definite Time (DT). The third and fourth stages have definite time characteristics only.

The overcurrent protection menu also includes settings for four stages of non-directional / directional Negative Phase Sequence (NPS) overcurrent protection with independent definite time delay characteristics.

Menu text	Default setting	Setting range		Step size
		Min.	Max.	
GROUP 1: OVERCURRENT				
PHASE O/C	Sub Heading			
I>1 Function	IEC S Inverse	Disabled, DT, IEC S Inverse, IEC V Inverse, IEC E Inverse, UK LT Inverse, UK Rectifier, RI, IEEE M Inverse, IEEE V Inverse, IEEE E Inverse, US Inverse, US ST Inverse		
Tripping characteristic for the first stage overcurrent protection.				
I>1 Direction	Non-directional	Non-directional Directional Fwd Directional Rev		
Direction of the first stage overcurrent protection.				
I>1 Current Set	1 In	0.08 In	4.0 In	0.01 In
Pick-up setting for first stage overcurrent protection.				
I>1 Time Delay	1	0	100	0.01
Operating time-delay setting for the definite time setting if selected for first stage element.				
I>1 TMS	1	0.025	1.2	0.025
Time multiplier setting to adjust the operating time of the IEC IDMT characteristic.				

Menu text	Default setting	Setting range		Step size
		Min.	Max.	
I>1 Time Dial	1	0.01	100	0.01
Time multiplier setting to adjust the operating time of the IEEE/US IDMT curves.				
I>1 K (RI)	1	0.1	10	0.05
Time multiplier setting to adjust the operating time for the RI curve.				
I>1 Reset Char	DT	DT, Inverse		N/A
Type of reset/release characteristic of the IEEE/US curves.				
I>1 tRESET	0 s	0 s	100 s	0.01 s
Reset/release time setting for definite time reset characteristic.				
I>2 Function	Disabled	Disabled, DT, IEC S Inverse, IEC V Inverse, IEC E Inverse, UK LT Inverse, UK Rectifier, RI, IEEE M Inverse, IEEE V Inverse, IEEE E Inverse, US Inverse, US ST Inverse		
Tripping characteristic for the second stage overcurrent protection.				
I>2 Cells as for I>1 above				
Setting the same as for the first stage overcurrent protection.				
I>3 Status	Disabled	Disabled, Enabled		N/A
Enable or disables the third stage overcurrent protection.				
I>3 Direction	Non-directional	Non-directional Directional Fwd Directional Rev		N/A
Direction of the third stage overcurrent protection.				
I>3 Current Set	20 In	0.08 In	32 In	0.01 In
Pick-up setting for third stage overcurrent protection.				
I>3 Time Delay	0 s	0 s	100 s	0.01 s
Operating time-delay setting for third stage overcurrent protection.				
I>4 Cells as for I>3 Above				
Settings the same as the third stage overcurrent protection.				
I> Char. Angle	45	–95°	+95°	1°
Relay characteristic angle setting used for the directional decision.				
I> Function Link	1111	Bit 0 = VTS Blocks I>1 Bit 1 = VTS Blocks I>2 Bit 2 = VTS Blocks I>3 Bit 3 = VTS Blocks I>4.		
Logic Settings that determine whether blocking signals from VT supervision affect certain overcurrent stages. VTS Block – only affects directional overcurrent protection. With the relevant bit set to 1, operation of the Voltage Transformer Supervision (VTS), will block the stage. When set to 0, the stage will revert to Non-directional upon operation of the VTS.				
NPS OVERCURRENT	Sub Heading			
I2>1 Status	Disabled	Disabled, Enabled		N/A
Enables or disables the first stage negative phase sequence overcurrent protection.				
I2>1Direction	Non-directional	Non-directional Directional Fwd Directional Rev		N/A
Direction of the negative phase sequence overcurrent element.				
I2>1 Current Set	0.2 In	0.08 In	4 In	0.01 In
Pick-up setting for the first stage negative phase sequence overcurrent protection.				
I2>1 Time Delay	10 s	0 s	100 s	0.01 s

Menu text	Default setting	Setting range		Step size
		Min.	Max.	
Operating time-delay setting for the first stage negative phase sequence overcurrent protection.				
I2>2 Cells as for I>3 Above				
I2>3 Cells as for I>3 Above				
I2>4 Cells as for I>3 Above				
I2> VTS Block	1111	Bit 0 = VTS blocks I2>1 Bit 1 = VTS blocks I2>2 Bit 2 = VTS blocks I2>3 Bit 3 = VTS blocks I2>4		
Logic settings that determine whether VT supervision blocks selected negative phase sequence overcurrent stages. With the relevant bit set to 1, operation of the Voltage Transformer Supervision (VTS), will block the stage. When set to 0, the stage will revert to Non-directional on operation of the VTS.				
I2> V2pol Set	5 V (Vn=100/120 V) 20 V (Vn=380/480 V)	0.5 V (Vn=100/120 V) 2 V (Vn=380/480 V)	25 V (Vn=100/120 V) 100 V (Vn=380/480 V)	0.5 V (Vn=100/120 V) 2 V (Vn=380/480 V)
Minimum negative phase sequence voltage polarizing quantity for directional decision.				
I2> Char Angle	–60°	–95°	+95°	1°
Relay characteristic angle setting used for the directional decision.				

Table 4 - Phase overcurrent protection settings

3.4 Thermal Overload (49)

The thermal overload function within the P341 relay is a single time constant thermal trip characteristic, dependent on the type of plant to be protected. It also includes a definite time alarm stage.

Menu text	Default setting	Setting range		Step size
		Min.	Max.	
GROUP 1: THERMAL OVERLOAD				
IThermal	Enabled	Disabled, Enabled		
Enables or disables the Thermal Overload trip function.				
Thermal I>	1.2 In	0.5 In	2.5 In	0.01 In
Pick-up setting for thermal overload trip.				
Thermal Alarm	90%	20%	100%	1%
Thermal state pick-up setting corresponding to a percentage of the trip threshold at which an alarm will be generated.				
T-heating	60 mins	1 min	200 mins	1 min
Heating thermal time constant setting for the thermal overload characteristic.				
T-cooling	60 mins	1 min	200 mins	1 min
Cooling thermal time constant setting for the thermal overload characteristic.				
M Factor	0	0	10	1
The M factor setting is a constant that relates negative phase sequence current heating to positive sequence current heating, I_{eq} = (I12 + M I22)0.5				

Table 5 - Thermal overload protection settings

3.5 Earth Fault (50N/51N)

The earth fault protection included in the P341 relay provides four stage of non-directional / directional earth fault protection. The first and second stages have selectable IDMT or DT characteristics, while the third and fourth stages are DT only. Each stage is selectable to be either non-directional, directional forward or directional reverse.

Menu text	Default setting	Setting range		Step size
		Min.	Max.	
GROUP 1: EARTH FAULT				
IN> Input	Derived			
IN>1 Function	IEC S Inverse	Disabled, DT, IEC S Inverse, IEC V Inverse, IEC E Inverse, UK LT Inverse, RI, IEEE M Inverse, IEEE V Inverse, IEEE E Inverse, US Inverse, US ST Inverse, IDG		
Tripping characteristic for the first stage earth fault protection.				
IN>1 Direction	Non-directional	Non-directional Directional Fwd Directional Rev		N/A
Direction of measurement for the first stage earth fault element.				
IN>1 Current	0.2 In	0.08 In	4.0 In	0.01 In
Pick-up setting for the first stage earth fault protection.				
IN>1 IDG Is	1.5	1	4	0.1
Multiple of “IN>” setting for the IDG curve (Scandinavian) and determines the actual relay current threshold at which the element starts.				
IN>1 Time Delay	1 s	0 s	200 s	0.01 s
Operating time-delay setting for the first stage definite time element.				
IN>1 TMS	1	0.025	1.2	0.025
Time multiplier setting to adjust the operating time of the IEC IDMT characteristic.				
IN>1 Time Dial	1	0.01	100	0.1
Time multiplier setting to adjust the operating time of the IEEE/US IDMT curves.				
IN>1 K (RI)	1	0.1	10	0.05
Time multiplier to adjust the operating time for the RI curve.				
IN>1 IDG Time	1.2	1	2	0.01
Minimum operating time at high levels of fault current for IDG curve.				
IN>1 Reset Char.	DT	DT, Inverse		N/A
Type of reset/release characteristic of the IEEE/US curves.				
IN>1 tRESET	0 s	0 s	100 s	0.01 s
Reset/release time for definite time reset characteristic.				
IN>2 Function	Disabled	Disabled, DT, IEC S Inverse, IEC V Inverse, IEC E Inverse, UK LT Inverse, RI, IEEE M Inverse, IEEE V Inverse, IEEE E Inverse, US Inverse, US ST Inverse, IDG		
Tripping characteristic for the second stage earth fault element.				
IN>2 Cells as for IN>1 Above				
IN>3 Status	Disabled	Disabled, Enabled		N/A
Enables or disables the third stage definite time element. If the function is disabled, then all associated settings with the exception of this setting, are hidden.				
IN>3 Direction	Non-directional	Non-directional Directional Fwd Directional Rev		N/A
Direction of measurement for the third stage earth fault element.				

Menu text	Default setting	Setting range		Step size
		Min.	Max.	
IN>3 Current	0. 5 In	0.08 In	32 In	0.01 In
Pick-up setting for third stage earth fault element.				
IN>3 Time Delay	0 s	0 s	200 s	0.01 s
Operating time delay setting for the third stage earth fault element.				
IN>4 Cells as for IN>3 Above				
IN> Func Link	1111	Bit 0 = IN>1 VTS Block Bit 1 = IN>2 VTS Block Bit 2 = IN>3 VTS Block Bit 3 = IN>4 VTS Block.		
Setting that determines whether VT supervision logic signals blocks the earth fault stage. With the relevant bit set to 1, operation of the Voltage Transformer Supervision (VTS), will block the stage. When set to 0, the stage will revert to Non-directional upon operation of the VTS.				
IN> DIRECTIONAL				
IN> Char. Angle	–60°	–95°	+95°	1°
Relay characteristic angle used for the directional decision.				
IN>Pol	Zero Sequence	Zero Sequence or Neg. Sequence		N/A
Selection of zero sequence or negative sequence voltage polarizing for directional earth fault protection.				
IN> VNpol Input	Measured	Measured, Derived		
Residual/neutral voltage (Zero sequence) polarization source.				
IN>VNpol Set	5 V (Vn=100/120 V) 20 V (Vn=380/480 V)	0.5 V (Vn=100/120 V) 2 V (Vn=380/480 V)	80 V (Vn=100/120 V) 320 V (Vn=380/480 V)	0.5 V (Vn=100/120 V) 2 V (Vn=380/480 V)
Minimum zero sequence voltage polarizing quantity for the directional decision				
IN>V2pol Set	0.5 V (Vn=100/120 V) 2 V (Vn=380/480 V)	0.5 V (Vn=100/120 V) 2 V (Vn=380/480 V)	25 V (Vn=100/120 V) 100 V (Vn=380/480 V)	0.5 V (Vn=100/120 V) 2 V (Vn=380/480 V)
Minimum negative sequence voltage polarizing quantity for the directional decision.				
IN>I2pol Set	0.08 In	0.08 In	1 In	0.01 In
Minimum negative sequence current polarizing quantity for the directional decision.				

Table 6 - Earth fault protection settings

3.6 Sensitive Earth Fault / Restricted Earth Fault (50N/51N/67N/67W/64)

If a system is earthed through a high impedance, or is subject to high ground fault resistance, the earth fault level will be severely limited. Consequently, the applied earth fault protection requires both an appropriate characteristic and a suitably sensitive setting range in order to be effective. A separate single stage sensitive earth fault element is provided within the P341 relay for this purpose, which has a dedicated input. This input may be configured to be used as a REF input. The REF protection in the relay may be configured to operate as either a high impedance or biased element.

Note	*The high impedance REF element of the relay shares the same sensitive current input as the SEF protection and sensitive power protection. Therefore only one of these elements may be selected. However, the low impedance REF element does not use the SEF input and so may be selected at the same time.*

Menu Text	Default setting	Setting range		Step size
		Min.	Max.	
GROUP 1: SEF/REF PROT'N				
SEF/REF Options	SEF	SEF, SEF cos (PHI), SEF sin (PHI), Wattmetric, Hi Z REF		
Setting to select the type of sensitive earth fault protection function and the type of high-impedance function to be used. If the function is not selected, then all associated settings and signals are hidden, with the exception of this setting.				
ISEF>1 Function	DT	Disabled, DT, IEC S Inverse, IEC V Inverse, IEC E inverse, UK LT Inverse IEEE M Inverse, IEEE V Inverse, IEEE E Inverse, US Inverse, US ST Inverse, IDG,		
Tripping characteristic for the first stage sensitive earth fault element.				
ISEF>1 Direction	Non-directional	Non-directional Direction Fwd Direction Rev		N/A
Direction of measurement for the first stage sensitive earth fault element.				
ISEF>1 Current	0.05 In	0.005 In	0.1 In	0.00025 In
Pick-up setting for the first stage sensitive earth fault element.				
ISEF>1 IDG Is	1.5	1	4	0.1
Multiple of “ISEF>” setting for the IDG curve (Scandinavian) and determines the actual relay current threshold at which the element starts.				
ISEF>1 Delay	1 s	0 s	200 s	0.01 s
Operating time delay setting for the first stage definite time element.				
ISEF>1 TMS	1	0.025	1.2	0.005
Time multiplier to adjust the operating time of the IEC IDMT characteristic.				
ISEF>1 Time Dial	1	0.1	100	0.1
Time multiplier to adjust the operating time of the IEEE/US IDMT curves.				
ISEF>1 IDG Time	1.2	1	2	0.01
Setting for the IDG curve used to set the minimum operating time at high levels of fault current.				
ISEF>1 Reset Char.	DT	DT, Inverse		N/A
Setting to determine the type of reset/release characteristic of the IEEE/US curves.				
ISEF>1 tRESET	0 s	0 s	100 s	0.01 s
Reset/release time for definite time reset characteristic.				
ISEF>2 Function	Disabled	Disabled, DT, IEC S Inverse, IEC V Inverse, IEC E inverse, UK LT Inverse IEEE M Inverse, IEEE V Inverse, IEEE E Inverse, US Inverse, US ST Inverse, IDG,		
Tripping characteristic for the first stage sensitive earth fault element.				

Menu Text	Default setting	Setting range		Step size
		Min.	Max.	
ISEF>2 Cells as for ISEF>1 Above				
ISEF>3 Status	Disabled	Disabled, Enabled		N/A
Enables or disables the third stage definite time sensitive earth fault element.				
ISEF>3 Direction	Non-directional	Non-directional Directional Fwd Directional Rev		N/A
Direction of measurement for the third stage element.				
ISEF>3 Current	0.4 In	0.005 In	0.8 In	0.001 In
Pick-up setting for the third stage sensitive earth fault element.				
ISEF>3 Time Delay	0.5 s	0 s	200 s	0.01 s
Operating time delay setting for third stage sensitive earth fault element.				
ISEF>4 Status	Disabled	Disabled, Enabled		N/A
Enables or disables the third stage definite time sensitive earth fault element.				
ISEF>4 Direction	Non-directional	Non-directional Directional Fwd Directional Rev		N/A
Direction of measurement for the third stage element.				
ISEF>4 Current	0.6 In	0.005 In	0.8 In	0.001 In
Pick-up setting for the third stage sensitive earth fault element.				
ISEF>3 Time Delay	0.25 s	0 s	200 s	0.01 s
Operating time delay for third stage sensitive earth fault element.				
ISEF> Func. Link	0001	Bit 0 = ISEF>1 VTS Block Bit 1 = ISEF>2 VTS Block Bit 2 = ISEF>3 VTS Block Bit 3 = ISEF>4 VTS Block.		
Setting that determines whether VT supervision logic signals blocks the sensitive earth fault stage. With the relevant bit set to 1, operation of the Voltage Transformer Supervision (VTS), will block the stage. When set to 0, the stage will revert to Non-directional upon operation of the VTS.				
ISEF DIRECTIONAL	Sub-heading in menu			
ISEF> Char. Angle	90°	–95°	+95°	1°
Relay characteristic angle used for the directional decision.				
ISEF>VNpol Input	Measured	Measured, Derived		
ISEF>VNpol Set	5 V (Vn=100/120 V) 20 V (Vn=380/480 V)	0.5 V (Vn=100/120 V) 2 V (Vn=380/480 V)	80 V (Vn=100/120 V) 320 V (Vn=380/480 V)	0.5 V (Vn=100/120 V) 2 V (Vn=380/480 V)
Minimum zero sequence voltage polarizing quantity required for the directional decision.				
WATTMETRIC SEF	Sub-heading in menu			
PN> Setting	9 In W (Vn=100/120 V) 36 In W (Vn=380/480 V)	0 W	20 In W (Vn=100/120 V) 80 In W (Vn=380/480 V)	0.05 In W (Vn=100/120 V) 0.2 In W (Vn=380/480 V)

Menu Text	Default setting	Setting range		Step size
		Min.	Max.	
Setting for the threshold for the wattmetric component of zero sequence power. The power calculation is as follows: The PN> setting corresponds to: Vres x Ires x Cos (ϕ - ϕc) = 9 x Vo x Io x Cos (ϕ - ϕc) Where: ϕ = Angle between the Polarizing Voltage (-Vres) and the Residual Current ϕc = Relay Characteristic Angle (RCA) Setting (ISEF> Char Angle) Vres = Residual Voltage Ires = Residual Current Vo = Zero Sequence Voltage Io = Zero Sequence Current				

Table 7 - Sensitive earth fault protection settings

For the Hi Z REF option, the following settings are available:

Menu text	Default setting	Setting range		Step size
		Min.	Max.	
RESTRICTED E/F	Sub-heading in menu			
IREF> Is	0.2 In	0.05 In	1.0 In	0.01 In
Pick-up setting for the high impedance REF protection.				

Table 8 - Restricted earth fault protection settings

3.7 Residual Overvoltage (Neutral Voltage Displacement) (59N)

The Neutral Voltage Displacement (NVD) element within the P341 relay is of two-stage design, each stage having separate voltage and time delay settings. Stage 1 may be set to operate on either an IDMT or DT characteristic, while stage 2 may be set to DT only.

Menu text	Default setting	Setting range		Step size
		Min.	Max.	
GROUP 1: RESIDUAL O/V NVD				
VN>1 Status	Enabled	Disabled, Enabled		
Enables or disables the VN>1 trip stage.				
VN>1 Input	Derived	N/A		N/A
VN>1 uses derived neutral voltage from the 3 phase voltage input (VN = VA+VB+VC).				
VN>1 Function	DT	Disabled, DT, IDMT		N/A
Tripping characteristic setting of the first stage residual overvoltage element.				
VN>1 Voltage Set	5 V (Vn=100/120 V) 20 V (Vn=380/480 V)	1 V (Vn=100/120 V) 4 V (Vn=380/480 V)	80 V (Vn=100/120 V) 320 V (Vn=380/480 V)	1 V (Vn=100/120 V) 4 V (Vn=380/480 V)
Pick-up setting for the first stage residual overvoltage characteristic.				
VN>1 Time Delay	5 s	0 s	100 s	0.01 s
Operating time delay setting for the first stage definite time residual overvoltage element.				
VN>1 TMS	1	0.5	100	0.5

Menu text	Default setting	Setting range		Step size
		Min.	Max.	
Setting for the time multiplier setting to adjust the operating time of the IDMT characteristic. The characteristic is defined as follows: t = K / (M – 1) where: K = Time multiplier setting t = Operating time in seconds M = Derived residual voltage/relay setting voltage (VN> Voltage Set)				
VN>1 tReset	0 s	0 s	100 s	0.01 s
Reset/release definite time setting for the first stage characteristic.				
VN>2 Status	Disabled	Disabled, Enabled		N/A
Enables or disables the second stage residual overvoltage element.				
VN>2 Input	Derived	N/A		N/A
VN>2 uses derived neutral voltage from the 3 phase voltage input (VN = VA+VB+VC).				
VN>2 Function	DT	Disabled, DT, IDMT		N/A
Tripping characteristic setting of the first stage residual overvoltage element.				
VN>2 Voltage Set	10 V (Vn=100/120 V) 40 V (Vn=380/480 V)	1 V (Vn=100/120 V) 4 V (Vn=380/480 V)	80 V (Vn=100/120 V) 320 V (Vn=380/480 V)	1 V (Vn=100/120 V) 4 V (Vn=380/480 V)
Pick-up setting for the first stage residual overvoltage characteristic.				
VN>2 Time Delay	10 s	0 s	100 s	0.01 s
Operating time delay setting for the first stage definite time residual overvoltage element.				
VN>2 TMS	1	0.5	100	0.5
Time multiplier setting to adjust the operating time of the IDMT characteristic. The characteristic is defined as above				
VN>2 tReset	0 s	0 s	100 s	0.01 s
Reset/release definite time setting for the first stage characteristic.				
VN>3 Status	Disabled	Disabled, Enabled		N/A
Enables or disables the third stage residual overvoltage element.				
VN>3 Input	VN1	N/A		N/A
VN>3 uses measured neutral voltage from the Vneutral/VN1 input.				
VN>3 cells as for VN>1 above				
VN>4 Status	Disabled	Disabled, Enabled		N/A
Enables or disables the fourth stage residual overvoltage element.				
VN>4 Input	VN1	N/A		N/A
VN>4 uses measured neutral voltage from the Vneutral/VN1 input.				
VN>4 cells as for VN>2 above				

Table 9 - Residual overvoltage protection settings

3.8 Rate of Change of Frequency Protection

Four stages of df/dt protection are included in P34x. The first stage, df/dt>1 is designed for loss of grid applications but it can also be used for load shedding. For the first stage only, the user can select a deadband around the nominal frequency, within which this element is blocked. The dead band is defined with high and low frequency settings *df/dt>1 f Low* and *df/dt> f High*. The deadband is eliminated if the high and low frequencies are set the same or the *df/dt> f L/H* setting is set to *Disabled*. The deadband provides additional stability for non loss of grid disturbances which do not affect the machine frequency significantly. Each stage has a direction setting *df/dt>n Dir'n – Negative, Positive, Both*. This setting determines whether the element will react to rising or falling frequency conditions respectively, with an incorrect setting being indicated if the threshold is set to zero. For loss of mains applications the *df/dt>1 Dir'n* should be set to *Both* to match the previous P341 algorithm.

Some global df/dt settings affect all protection stages. These can be used to smooth out the frequency measurements and provide stable operation of the protection, *df/dt avg cycles* and *df/dt iterations*. These settings enable the user to select the number of cycles the frequency is averaged over and the number of iterations of the averaged cycles before a start is given. Two *Operating Mode* settings are provided: *Fixed Window* and *Rolling Window*. The *Fixed Window* setting is provided for compatibility with the previous P341 df/dt function which used two consecutive calculations of a 3 cycle fixed window to initiate a start.

Menu text	Default setting	Setting range		Step size
		Min.	Max.	
GROUP 1 DF/DT				
Operating Mode	Fixed Window	Fixed Window, Rolling Window		
Selects the algorithm method, Fixed or Rolling Window, used for df/dt calculation.				
df/dt Avg. Cycles	3	2	12	1
Sets the number of power system cycles that are used to average the rate of change of frequency measurement.				
df/dt Iterations	2	1	4	1
Sets the number of iterations of the df/dt protection element to obtain a start signal. For example if *Operating Mode* is *Fixed Window* and *df/dt Avg Cycles* = 3 and *df/dt Iterations* = 2 then df/dt start will be after 2 consecutive 3 cycle windows above setting.				
df/dt>1 Status	Enabled	Disabled, Enabled		
Setting to enable or disable the first stage df/dt element.				
df/dt>1 Setting	0.2 Hz/s	100.0 mHz/s	10 Hz/s	10 mHz/s
Pick-up setting for the first stage df/dt element.				
df/dt>1 Dir'n.	Both	Negative, Positive, Both		N/A
This setting determines whether the element will react to rising or falling frequency conditions respectively, with an incorrect setting being indicated if the threshold is set to zero.				
df/dt>1 Time	500.0 ms	0	100	10 ms
Operating time-delay setting for the first stage df/dt element.				
df/dt>1 f L/H	Enabled	Disabled, Enabled		
Enables or disables the low and high frequency block function for the first stage of df/dt protection. The df/dt>1 stage is blocked if the frequency is in the deadband defined by the df/dt>1 F Low and df/dt>1 F High setting. This is typically required for loss of grid applications.				
df/dt>1 f Low	49.5 Hz	45 Hz	65 Hz	0.01 Hz
Setting for the df/dt>1 low frequency blocking.				
df/dt>1 f High	50.5 Hz	45 Hz	65 Hz	0.01 Hz
Setting for the df/dt>1 high frequency blocking.				

Menu text	Default setting	Setting range		Step size
		Min.	Max.	
df/dt>2 Status	Enabled	Disabled, Enabled		
Setting to enable or disable the first stage df/dt element.				
df/dt>2 Setting	2.000 Hz/s	100.0 mHz/s	10 Hz/s	10 mHz/s
Pick-up setting for the first stage df/dt element.				
df/dt>2 Dir'n.	Positive	Negative, Positive, Both		N/A
This setting determines whether the element will react to rising or falling frequency conditions respectively.				
df/dt>2 Time	500.0 ms	0	100	10 ms
Operating time-delay setting for the second stage df/dt element.				
df/dt>3 Status (same as stage2)	Enabled	Disabled, Enabled		N/A
df/dt>4 Status (same as stage2)	Enabled	Disabled, Enabled		N/A

Table 10 - df/dt Protection settings

3.9 Voltage Vector Shift Protection (ΔVθ)

The P341 provides one stage of voltage vector protection (df/dt+t). This element detects the fluctuation in voltage angle that will occur as the machine adjusts to the new load conditions following loss of the grid.

Menu Text	Default Setting	Setting Range		Step Size
		Min.	Max.	
GROUP 1: V VECTOR SHIFT				
V Shift Status	Enabled	Disabled, Enabled		N/A
Enables or disables the Voltage Vector Shift element.				
V Shift Angle	10º	2º	30º	1º
Pick-up angle setting for the Voltage Vector Shift element.				

Table 11 - Voltage vector shift protection settings

3.10 Reconnect Delay (79)

To minimize the disruption caused by a loss of mains trip, the P341 includes a reconnection timer. This timer is initiated following operation of any protection element that could operate due to a loss of mains event, i.e. df/dt, voltage vector shift, under/overfrequency, power and under/overvoltage. The timer is blocked should a short circuit fault protection element operate, i.e. residual overvoltage, overcurrent, and earth fault. Once the timer delay has expired the element provides a pulsed output signal. This signal can be used to initiate external synchronizing equipment that can re-synchronies the machine with the system and reclose the CB.

Menu Text	Default Setting	Setting Range		Step Size
		Min.	Max.	
GROUP 1: RECONNECT DELAY				
Reconnect Status	Enabled	Disabled, Enabled		N/A
Enables or disables the Reconnect Status element.				
Reconnect Delay	60 s	0 s	300 s	0.01 s
Operating time-delay setting for the Reconnect element.				
Reconnect tPULSE	1 s	0.01 s	30 s	0.01 s
Reconnect element output pulse duration.				

Table 12 - Reconnect delay settings

3.11 Voltage Protection (27/59/47)

The undervoltage and overvoltage protection included within the P341 relay consists of two independent stages. Two stages are included to provide both alarm and trip stages, where required. These are configurable as either phase to phase or phase to neutral measuring. The undervoltage stages may be optionally blocked by a pole dead (CB Open) condition.

The first stage of under/overvoltage protection has a time-delayed characteristics which is selectable between Inverse Definite Minimum Time (IDMT), or Definite Time (DT). The second stage is definite time only.

Negative phase sequence overvoltage protection is also included with a definite time delay.

Menu text	Default setting	Setting range		Step size
		Min.	Max.	
GROUP 1: VOLT PROTECTION				
UNDERVOLTAGE	Sub-heading			
V< Measur't. Mode	Phase-Neutral	Phase-Phase Phase-Neutral		N/A
Sets the measured input voltage, phase-phase or phase-neutral, that will be used for the undervoltage elements.				
V< Operate Mode	Any Phase	Any Phase Three Phase		N/A
Setting that determines whether any phase or all three phases has to satisfy the undervoltage criteria before a decision is made.				
V<1 Function	DT	Disabled, DT, IDMT		N/A
Tripping characteristic for the first stage undervoltage function. The IDMT characteristic available on the first stage is defined by the following formula: t = K / (1 - M) Where: K = Time multiplier setting t = Operating time in seconds M = Measured voltage/relay setting voltage (V< Voltage Set)				
V<1 Voltage Set	50 V (Vn=100/120 V) 200 V (Vn=380/480 V)	10 V (Vn=100/120 V) 40 V (Vn=380/480 V)	120 V (Vn=100/120 V) 480 V (Vn=380/480 V)	1 V (Vn=100/120 V) 4 V (Vn=380/480 V)
Pick-up setting for first stage undervoltage element.				
V<1 Time Delay	10 s	0 s	100 s	0.01 s
Operating time-delay setting for the first stage definite time undervoltage element.				
V<1 TMS	1	0.05	100	0.05
Time multiplier setting to adjust the operating time of the IDMT characteristic.				
V<1 Poledead Inh	Enabled	Disabled, Enabled		N/A
If the setting is enabled, the relevant stage will become inhibited by the pole dead logic. This logic produces an output when it detects either an open circuit breaker via auxiliary contacts feeding the relay opto inputs or it detects a combination of both undercurrent and undervoltage on any one phase. It allows the undervoltage protection to reset when the circuit breaker opens to cater for line or bus side VT applications				
V<2 Status	Disabled	Disabled, Enabled		N/A
Enables or disables the second stage undervoltage element.				

Menu text	Default setting	Setting range		Step size
		Min.	Max.	
V<2 Voltage Set	38 V (Vn=100/120 V) 152 V (Vn=380/480 V)	10 V (Vn=100/120 V) 40 V (Vn=380/480 V)	120 V (Vn=100/120 V) 480 V (Vn=380/480 V)	1 V (Vn=100/120 V) 4 V (Vn=380/480 V)
Pick-up setting for second stage undervoltage element.				
V<2 Time Delay	5 s	0 s	100 s	0.01 s
Operating time-delay setting for the second stage definite time undervoltage element.				
V<2 Poledead Inh	Enabled	Disabled, Enabled		N/A
If the setting is enabled, the relevant stage will become inhibited by the pole dead logic. This logic produces an output when it detects either an open circuit breaker via auxiliary contacts feeding the relay opto inputs or it detects a combination of both undercurrent and undervoltage on any one phase. It allows the undervoltage protection to reset when the circuit breaker opens to cater for line or bus side VT applications.				
OVERVOLTAGE	Sub-heading			
V> Measur't. Mode	Phase-Phase	Phase-Phase Phase-Neutral		N/A
Sets the measured input voltage, phase-phase or phase-neutral that will be used for the overvoltage elements.				
V> Operate Mode	Any Phase	Any Phase, Three Phase		N/A
Setting that determines whether any phase or all three phases has to satisfy the overvoltage criteria before a decision is made.				
V>1 Function	DT	Disabled, DT, IDMT		N/A
Tripping characteristic setting for the first stage overvoltage element. The IDMT characteristic available on the first stage is defined by the following formula: t = K / (M - 1) Where: K = Time multiplier setting t = Operating time in seconds M = Measured voltage/relay setting voltage (V<>Voltage Set)				
V>1 Voltage Set	130 V (Vn=100/120 V) 520 V (Vn=380/480 V)	60 V (Vn=100/120 V) 240 V (Vn=380/480 V)	185 V (Vn=100/120 V) 740 V (Vn=380/480 V)	1 V (Vn=100/120 V) 4 V (Vn=380/480 V)
Pick-up setting for first stage overvoltage element.				
V>1 Time Delay	10 s	0 s	100 s	0.01 s
Operating time-delay setting for the first stage definite time overvoltage element.				
V>1 TMS	1	0.05	100	0.05
Time multiplier setting to adjust the operating time of the IDMT characteristic.				
V>2 Status	Disabled	Disabled, Enabled		N/A
Enables or disables the second stage overvoltage element.				
V>2 Voltage Set	150 V (Vn=100/120 V) 600 V (Vn=380/480 V)	60 V (Vn=100/120 V) 240 V (Vn=380/480 V)	185 V (Vn=100/120 V) 740 V (Vn=380/480 V)	1 V (Vn=100/120 V) 4 V (Vn=380/480 V)
Pick-up setting for the second stage overvoltage element.				
V>2 Time Delay	0.5 s	0 s	100 s	0.01 s
Operating time-delay setting for the second stage definite time overvoltage element.				
NPS OVERVOLTAGE	Sub-heading			
V2> status	Enabled	Disabled, Enabled		N/A

Menu text	Default setting	Setting range		Step size
		Min.	Max.	
Enables or disables the definite time negative sequence overvoltage element.				
V2>1 Voltage Set	15 V (Vn=100/120 V) 60 V (Vn=380/480 V)	1 V (Vn=100/120 V) 4 V (Vn=380/480 V)	150 V (Vn=100/120 V) 600 V (Vn=380/480 V)	1 V (Vn=100/120 V) 4 V (Vn=380/480 V)
Pick-up setting for the negative sequence overvoltage element.				
V2> Time Delay	1 s	0 s	100 s	0.01 s
Operating time delay setting for the definite time negative sequence overvoltage element.				

Table 13 - Under/Overvoltage protection settings

3.12 Frequency Protection (81U/81O)

The P341 relay includes 4 stages of underfrequency and 2 stages of overfrequency protection to facilitate load shedding and subsequent restoration. The underfrequency stages may be optionally blocked by a pole dead (CB Open) condition.

Menu text	Default setting	Setting range		Step size
		Min.	Max.	
GROUP 1: FREQ. PROTECTION				
UNDERFREQUENCY				
F<1 Status	Enabled	Disabled, Enabled		N/A
Enables or disables the first stage underfrequency element.				
F<1 Setting	49.5 Hz	45 Hz	65 Hz	0.01 Hz
Pick-up setting for the first stage underfrequency element.				
F<1 Time Delay	4 s	0 s	100 s	0.01 s
Operating time-delay setting for the definite time first stage underfrequency element.				
F<2 Status	Disabled	Disabled, Enabled		N/A
Enables or disables the second stage underfrequency element.				
F<2 Setting	49 Hz	45 Hz	65 Hz	0.01 Hz
Pick-up setting for the second stage underfrequency element.				
F<2 Time Delay	3 s	0 s	100 s	0.01 s
Operating time-delay setting for the definite time second stage underfrequency element.				
F<3 Status	Disabled	Disabled, Enabled		N/A
Enables or disables the third stage underfrequency element.				
F<3 Setting	48.5 Hz	45 Hz	65 Hz	0.01 Hz
Pick-up setting for the third stage underfrequency element.				
F<3 Time Delay	2 s	0 s	100 s	0.01 s
Operating time-delay setting for the definite time third stage underfrequency element.				
F<4 Status	Disabled	Disabled, Enabled		N/A
Enables or disables the fourth stage underfrequency element.				
F<4 Setting	48 Hz	45 Hz	65 Hz	0.01 Hz
Pick-up setting for the fourth stage underfrequency element.				
F<4 Time Delay	1 s	0 s	100 s	0.01 s
Operating time-delay setting for the definite time fourth stage underfrequency element.				
F< Function Link	0000	Bit 0 = F<1 Poledead Blk Bit 1 = F<2 Poledead Blk Bit 2 = F<3 Poledead Blk Bit 3 = F<4 Poledead Blk		N/A
Settings that determines whether pole dead logic signals blocks the underfrequency elements. With the relevant bit set to 1, the relevant underfrequency stage will become inhibited by the pole dead logic. This logic produces an output when it detects either an open circuit breaker via auxiliary contacts feeding the relay opto inputs or it detects a combination of both undercurrent and undervoltage on any one phase. It allows the underfrequency protection to reset when the circuit breaker opens to cater for line or bus side VT applications.				
OVERFREQUENCY				
F>1 Status	Enabled	Disabled, Enabled		N/A
Enables or disables the first stage overfrequency element.				
F>1 Setting	50.5 Hz	45 Hz	68 Hz	0.01 Hz
Pick-up setting for the first stage overfrequency element.				

Menu text	Default setting	Setting range		Step size
		Min.	Max.	
F>1 Time Delay	2 s	0 s	100 s	0.01 s
Operating time-delay setting for the first stage overfrequency element.				
F>2 Status	Disabled	Disabled, Enabled		N/A
Enables or disables the second stage overfrequency element.				
F>2 Setting	51 Hz	45 Hz	68 Hz	0.01 Hz
Pick-up setting for the second stage overfrequency element.				
F>2 Time Delay	1 s	0 s	100 s	0.01 s
Operating time-delay setting for the second stage overfrequency element.				

Table 14 - Frequency protection settings

3.13 Circuit Breaker Fail and Undercurrent Function (50BF)

This function consists of a two-stage circuit breaker fail function that can be initiated by:

- Current based protection elements
- Non current based protection elements
- External protection elements

For current-based protection, the reset condition is based on undercurrent operation to determine that the CB has opened. For the non-current based protection, the reset criteria may be selected by means of a setting for determining a CB Failure condition.

It is common practice to use low set undercurrent elements in protection relays to indicate that circuit breaker poles have interrupted the fault or load current, as required.

Menu text	Default setting	Setting range		Step size
		Min.	Max.	
GROUP 1: CB FAIL & I<				
BREAKER FAIL	Sub-heading			
CB Fail 1 Status	Enabled	Disabled, Enabled		
Enables or disables the first stage of the circuit breaker function.				
CB Fail 1 Timer	0.2 s	0 s	10 s	0.01 s
Operating time-delay setting for the first stage circuit breaker fail element.				
CB Fail 2 Status	Disabled	Disabled, Enabled		
Enables or disables the second stage of the circuit breaker function.				
CB Fail 2 Timer	0.4 s	0 s	10 s	0.01 s
Operating time-delay setting for the first stage circuit breaker fail element.				
CBF Non I Reset	CB Open & I<	I< Only, CB Open & I<, Prot. Reset & I<		
Setting which determines the elements that will reset the circuit breaker fail time for non current based protection functions (e.g. voltage, frequency) initiating circuit breaker fail conditions.				
CBF Ext Reset	CB Open & I<	I< Only, CB Open & I<, Prot. Reset & I<		
Setting which determines the elements that will reset the circuit breaker fail time for external protection functions initiating circuit breaker fail conditions.				
UNDERCURRENT	Sub-heading			
I< Current Set	0.1 In	0.02 In	3.2 In	0.01 In
Circuit breaker fail phase fault undercurrent setting. This undercurrent element is used to reset the CB failure function initiated from the internal or external protection (Any Trip and Ext Trip 3Ph signals).				
ISEF< Current	0.02 In	0.001 In	0.8 In	0.0005 In
Circuit breaker fail sensitive earth fault undercurrent setting. This undercurrent element is used to reset the CB failure function initiated from the sensitive earth fault protection.				
BLOCKED O/C	Sub-heading			
Remove I> Start	Enabled	Disabled, Enabled		
The ‘Remove I> Start’ setting if enabled sets DDB ‘I> Block Start’ to OFF for a breaker fail condition. The ‘I> Block Start’ DDB is the start signal from all stages of I> protection and is used in blocking schemes. When the block DDB is removed upstream protection is allowed to trip to clear the CB Fail fault condition.				
Remove IN> Start	Enabled	Disabled, Enabled		
The ‘Remove IN> Start’ setting if enabled sets DDB ‘IN/ISEF> Bl Start’ to OFF for a breaker fail condition. The ‘IN/ISEF> Bl Start’ DDB is the start signal from all stages of IN> and ISEF> protection and is used in blocking schemes. When the block DDB is removed upstream protection is allowed to trip to clear the CB Fail fault condition.				

Table 15 - CBF protection settings

3.14 Supervision (VTS and CTS)

The VTS feature in the relay operates when it detects a Negative Phase Sequence (NPS) voltage when there is no negative phase sequence current. This gives operation, for the loss of one or two-phase voltages. Stability of the VTS function is assured during system fault conditions, by the presence of NPS current. The use of negative sequence quantities ensures correct operation even where three-limb or 'V' connected VTs are used.

If all three-phase voltages to the relay are lost, there are no negative phase sequence quantities to operate the VTS function, and the three-phase voltages collapse. If this is detected without a corresponding change in any of the phase current signals (which would be indicative of a fault), a VTS condition will be raised. In practice, the relay detects superimposed current signals, which are changes in the current applied to the relay.

If a VT is inadvertently left isolated before line energization, voltage dependent elements may operate incorrectly. The previous VTS element detected 3-phase VT failure due to the absence of all 3-phase voltages with no corresponding change in current. However, on line energization there is a change in current, for example, due to load or line charging current. An alternative method of detecting 3-phase VT failure is therefore required on line energization.

The absence of measured voltage on all three-phases on line energization can be as a result of two conditions. The first is a 3-phase VT failure and the second is a close up 3-phase fault. The first condition would require blocking of the voltage dependent function and the second would require tripping. To differentiate between these two conditions an overcurrent level detector (VTS I> Inhibit) is used to prevent a VTS block from being issued if it operates. This element should be set in excess of any non-fault based currents on line energization (load, line charging current, transformer inrush current if applicable) but below the level of current produced by a close up 3-phase fault. If the line is closed where a 3-phase VT failure is present the overcurrent detector will not operate and a VTS block will be applied. Closing onto a 3-phase fault will result in operation of the overcurrent detector and prevent a VTS block being applied.

This logic will only be enabled during a live line condition (as indicated by the relays pole dead logic) to prevent operation under dead system conditions i.e. where no voltage will be present and the VTS I> Inhibit overcurrent element will not be picked up.

The CT supervision feature operates on detection of derived zero sequence current, in the absence of corresponding derived zero sequence voltage that would normally accompany it.

The CT supervision can be set to operate from the residual voltage measured at the VNEUTRAL input or the residual voltage derived from the three phase-neutral voltage inputs as selected by the 'CTS Vn Input' setting.

There is one stage of CT supervision CTS. CTS supervises the CT inputs to IA, IB, IC which are used by all the power and overcurrent based protection functions.

Menu text	Default setting	Setting range		Step size
		Min.	Max.	
SUPERVISION: GROUP 1				
VT SUPERVISION	Sub-heading			
VTS Status	Blocking	Blocking, Indication		
This setting determines whether the following operations will occur upon detection of VTS. - VTS set to provide alarm indication only. - Optional blocking of voltage dependent protection elements. - Optional conversion of directional overcurrent elements to non-directional protection (available when set to blocking mode only). These settings are found in the function links cell of the relevant protection element columns in the menu.				

Menu text	Default setting	Setting range		Step size
		Min.	Max.	
VTS Reset Mode	Manual	Manual, Auto		
The VTS block will be latched after a user settable time delay 'VTS Time Delay'. Once the signal has latched then two methods of resetting are available. The first is manually via the front panel interface (or remote communications) and secondly, when in 'Auto' mode, provided the VTS condition has been removed and the 3 phase voltages have been restored above the phase level detector settings for more than 240 ms.				
VTS Time Delay	5 s	1 s	10 s	0.1 s
Operating time-delay setting of the VTS element upon detection of a voltage supervision condition.				
VTS I> Inhibit	10 In	0.08 In	32 In	0.01 In
This overcurrent setting is used to inhibit the voltage transformer supervision in the event of a loss of all 3 phase voltages caused by a close up 3 phase fault occurring on the system following closure of the CB to energize the line.				
VTS I2> Inhibit	0.05 In	0.05 In	0.5 In	0.01 In
This NPS overcurrent setting is used to inhibit the voltage transformer supervision in the event of a fault occurring on the system with negative sequence current above this setting.				
CT SUPERVISION	Sub-heading			
CTS Status	Disabled	Disabled, Enabled		N/A
Enables or disables the current transformer supervision 1 element.				
CTS VN Input	Derived	Derived, Measured		N/A
Residual/neutral voltage source for CTS.				
CTS VN< Inhibit	5 V (Vn=100/120 V) 20 V (Vn=380/480 V)	0.5 V (Vn=100/120 V) 2 V (Vn=380/480 V)	22 V (Vn=100/120 V) 88 V (Vn=380/480 V)	0.5 V (Vn=100/120 V) 2 V (Vn=380/480 V)
Residual/neutral voltage setting to inhibit the CTS1 element.				
CTS IN> Set	0.2 In	0.08 In	4 In	0.01 In
Residual/neutral current setting for a valid current transformer supervision condition for CTS.				
CTS Time Delay	5 s	0 s	10 s	1 s
Operating time-delay setting of CTS.				

Table 16 - VTS and CTS protection settings

3.15 Sensitive Power Protection (32R/32O/32L)

The single phase power protection included in the P341 relay provides two stages of power protection. Each stage can be independently selected as either reverse power, over power, low forward power or disabled. The direction of operation of the power protection, forward or reverse, can also be defined with the operating mode setting. Note that the high impedance REF element of the relay shares the same sensitive current input as the SEF protection and sensitive power protection. Therefore only one of these elements may be selected.

Menu text	Default setting	Setting range		Step size
		Min	Max	
GROUP1: SENSITIVE POWER				
Comp Angle	0	-5°	5°	0.1
Setting for the compensation angle.				
Operating Mode	Generating	Generating, Motoring		
Operating mode of the power protection defining forward/reverse direction – Generating = forward power towards the busbar, Motoring = forward power towards the machine. Assumes CT connections as per standard connection diagrams.				
Sen Power1 Func	Reverse	Disabled, Reverse, Low Forward, Over		
First stage power function operating mode.				
Sen –P>1 Setting	0.5 In W (Vn=100/120 V) 2 In W (Vn=380/480 V)	0.3 In W (Vn=100/120 V) 1.2 In W (Vn=380/480 V)	100 In W (Vn=100/120 V) 400 In W (Vn=380/480 V)	0.1 In W (Vn=100/120 V) 0.4 In W (Vn=380/480 V)
Pick-up setting for the first stage reverse power protection element.				
Sen P<1 Setting	0.5 In W (Vn=100/120 V) 2 In W (Vn=380/480 V)	0.3 In W (Vn=100/120 V) 1.2 In W (Vn=380/480 V)	100 In W (Vn=100/120 V) 400 In W (Vn=380/480 V)	0.1 In W (Vn=100/120 V) 0.4 In W (Vn=380/480 V)
Pick-up setting for the first stage low forward power protection element.				
Sen P>1 Setting	50 In W (Vn=100/120 V) 200 In W (Vn=380/480 V)	0.3 In W (Vn=100/120 V) 1.2 In W (Vn=380/480 V)	100 In W (Vn=100/120 V) 400 In W (Vn=380/480 V)	0.1 In W (Vn=100/120 V) 0.4 In W (Vn=380/480 V)
Pick-up setting for the first stage over power protection element.				
Sen Power1 Delay	5 s	0 s	100 s	0.01 s
Operating time-delay setting of the first stage power protection.				
Power1 DO Timer	0 s	0 s	100 s	0.01 s
Drop-off time-delay setting of the first stage power protection.				
P1 Poledead Inh	Enabled	Disabled, Enabled		
If the setting is enabled, the relevant stage will become inhibited by the pole dead logic. This logic produces an output when it detects either an open circuit breaker via auxiliary contacts feeding the relay opto inputs or it detects a combination of both undercurrent and undervoltage on any one phase. It allows the power protection to reset when the circuit breaker opens to cater for line or bus side VT applications.				
Sen Power2 Func	Low Forward	Disabled, Reverse, Low Forward, Over		
Second stage power function operating mode.				
Sen –P>2 Setting	0.5 In W (Vn=100/120 V) 2 In W (Vn=380/480 V)	0.3 In W (Vn=100/120 V) 1.2 In W (Vn=380/480 V)	100 In W (Vn=100/120 V) 400 In W (Vn=380/480 V)	0.1 In W (Vn=100/120 V) 0.4 In W (Vn=380/480 V)
Pick-up setting for the second stage reverse power protection element.				

Menu text	Default setting	Setting range		Step size
		Min	Max	
Sen P<2 Setting	0.5 In W (Vn=100/120 V) 2 In W (Vn=380/480 V)	0.3 In W (Vn=100/120 V) 1.2 In W (Vn=380/480 V)	100 In W (Vn=100/120 V) 400 In W (Vn=380/480 V)	0.1 In W (Vn=100/120 V) 0.4 In W (Vn=380/480 V)
Pick-up setting for the second stage low forward power protection element.				
Sen P>2 Setting	50 In W (Vn=100/120 V) 200 In W (Vn=380/480 V)	0.3 In W (Vn=100/120 V) 1.2 In W (Vn=380/480 V)	100 In W (Vn=100/120 V) 400 In W (Vn=380/480 V)	0.1 In W (Vn=100/120 V) 0.4 In W (Vn=380/480 V)
Pick-up setting for the second stage low forward power protection element.				
Sen Power2 Delay	5 s	0 s	100 s	0.01 s
Operating time-delay setting of the second stage power protection.				
Power2 DO Timer	0 s	0 s	100 s	0.01 s
Drop-off time-delay setting of the second stage power protection.				
P2 Poledead Inh	Enabled	Disabled, Enabled		
If the setting is enabled, the relevant stage will become inhibited by the pole dead logic. This logic produces an output when it detects either an open circuit breaker via auxiliary contacts feeding the relay opto inputs or it detects a combination of both undercurrent and undervoltage on any one phase. It allows the power protection to reset when the circuit breaker opens to cater for line or bus side VT applications.				

Table 17 - Sensitive power protection settings

3.16 DLR Protection (49DLR)

The P341 provides Dynamic Line Rating (DLR) protection which can be applied for load management and protection of overhead lines. DLR can enable more Distributed Generation (DG) such as windfarms to be connected to the grid by taking into account the cooling effect of the wind compared to using the fixed summer/winter line ratings. The CIGRE 207 or IEEE 738 standard can be selected for the DLR protection.

In configuring the relay it is necessary to enter a range of conductor data parameters, which are required for the heating and cooling calculations (PJ, PC, Pr and PS). To assist the user, the relay stores the relevant parameters of 36 types of British conductors which can be selected using the 'Conductor Type' setting. Other conductor types can be defined if 'Custom' is selected for the conductor type and additional settings become visible to define the conductor - 'NonFerrous Layer', 'DC Resist per km', 'Overall Diameter', 'Outer Layer Diam', 'TotalArea(mm sq)', and 'TempCoefR x0.001'.

Other conductor configuration settings are also required to define the conductor toplogy and characteristics – 'Solar Absorp', 'Line Emissivity', 'Line Elevation', 'Line Azimuth Min', 'Line Azimuth Max' and 'T Conductor Max'.

The 'Ampacity Min' and 'Ampacity Max' settings are used for the calculated ampacity. This setting is used to avoid over calculating of the line ampacity for the protection stages. In practice the rating of other components e.g. cables, joints and switchgear may limit the maximum ampacity. There is a drop-off ratio setting which should be set to prevent chattering of the outputs for a small variations of the ampacity around the setting.

If there are measurement sensors to measure the weather conditions - Ambient Temperature, Wind Velocity, Wind Direction or Solar Radiation then these can be assigned to one of the 4 the current loop (transducer) inputs in the Channel Settings or can be disabled. If no measurement device is available and the current loop inputs for the weather station inputs are disabled or if the current loop input fails then a default value can be set in the Channel Settings for the Ambient Temperature, Wind Velocity, Wind Direction and Solar Radiation. The Ambient Temperature, Wind Velocity, Wind Direction and Solar Radiation correction factor settings can be used to allow for shielding or shading affects. The Maximum and Minimum settings under the Channel Settings allows the user to set low and high cut-off limits for the weather measurements that will be used by the DLR algorithm. If no limits are required then these settings can be set the same as the Minimum and Maximum values for the current loop (transducer) inputs for the Ambient Temperature, Wind Velocity, Wind Direction and Solar Radiation.

If the Ambient Temperature, Wind Velocity, Wind Direction or Solar Radiation is changing quickly then the averaging time settings will help to smooth out the ampacity calculations. The averaging setting will impact the rate at which the ampacity is updated so this will affect the operating time of the protection. If very responsive protection is required then the averaging time should have a lower value.

For the Ambient Temperature, Wind Velocity, Wind Direction and Solar Radiation the transducer type can be selected from four types with ranges 0-1 mA, 0-10 mA, 0-20 mA or 4-20 mA. The Input Maximum and Minimum settings allow the user to enter the range of the physical quantity measured by the transducer. For the 4-20 mA inputs a current level below 4 mA indicates that there is a fault with the transducer or the wiring. An instantaneous under current alarm element is available with a setting range 0-4 mA.

There are a total of 6 alarm/trip elements which have a threshold level setting as a percentage of the line ampacity and definite time delay settings. The thresholds can be used to provide alarms and commands to the generation to HOLD or REDUCE or STOP at specific levels of ampacity below the trip level. If the ampacity reaches a critical level for example 100% then the line can be tripped. The time delay settings are used to avoid spurious tripping during transient network faults and allow discrimination with other protection functions and are also used to provide co-ordination with the load management system to allow time for the wind farm to take action before another DLR stage operates.

Menu Text	Default Setting	Setting Range		Step Size
		Min	Max	
GROUP1: DYNAMIC RATING				
Dyn Line Rating	CIGRE Std 207	Disabled/CIGRE Std 207/ IEEE Std 738		
Selection of the Dynamic Line Rating standard to be used.				
DLR LINE SETTING				
Conductor Type	Lynx	Gopher, Weasel, Ferret, Rabbit, Horse, Dog, Wolf, Dingo, Lynx, Caracal, Panther, Jaguar, Zebra, Fox, Mink, Skunk, Beaver, Raccoon, Otter, Cat, Hare, Hyena, Leopard, Tiger, Coyote, Lion, Bear, Batang, Goat, Antelope, Sheep, Bison, Deer, Camel, Elk, Moose, Custom		
Conductor Type. 36 British conductor types are listed. Other conductor types can be defined in Custom is selected with the settings - 'NonFerrous Layer', 'DC Resist per km', 'Overall Diameter', 'Outer Layer Diam', 'TotalArea(mm sq)', 'TempCoefR x0.001', and 'mc'.				
NonFerrous Layer	2	1	3	1
Number of layers of non ferrous (e.g. aluminum) wires. See figure 1 for ACSR (Aluminum Conductor Steel Reinforced) conductor layers.				
DC Resist per km	1 Ω	0.001 Ω	2 Ω	0.0001 Ω
Conductor DC resistance at 20oC per kilometer.				
Overall Diameter	0.005 m	0.001 m	0.1 m	0.00001 m
Conductor overall diameter.				
Outer Layer Diam	0.002 m	0.001 m	0.01 m	0.00001 m
The diameter of a single wire in one of the outer layers. For example the diameter of one of the 30 aluminium wires for 30Al/7St conductor shown in Figure 1.				
TotalArea(mm sq)	100 mm2	10 mm2	1000 mm2	0.01 mm2
Conductor total cross section area.				
TempCoefR x0.001	4 K	1 K	10 K	0.01 K
Conductor temperature coefficient of resistance x 10-3				
mc	500 J/(m·K)	1 J/(m·K)	5000 J/(m·K)	0.1 J/(m·K)
Total conductor heat capacity, is defined as the product of specific heat and mass per unit length. If the conductor consists of more than one material (e.g., ACSR), then the heat capacities of the core and the outer strands need to be summated, mc = maca + mscs, where 'a' and 's' refer to the non-ferrous and ferrous sections. 'm' is the mass per unit length in kg/m, and 'c' is the specific heat capacity in J/(kg·K). 'mc' is used for calculating the dynamic and steady state conductor temperatures – 'Dyn Conduct Temp' and 'Steady Conduct T' in the Measurements 4 menu.				
Solar Absorpt	0.5	0.23	0.95	0.01
Conductor solar absorptivity, used to calculate PS.				
Line Emissivity	0.5	0.23	0.95	0.01
Conductor emissivity, used to calculate PR.				
Line Elevation	0 m	-1000 m	6000 m	1 m
Conductor elevation, used to calculate PS and PC.				
Line Azimuth Min	0°	0°	360°	0.1°

Menu Text	Default Setting	Setting Range		Step Size
		Min	Max	
The Line Azimuth Min and Max settings indicates the direction of the line and is used to calculate PS and PC. If the line is in one direction then the Line Azimuth Min and Max settings are the same angle. If for example the mounting direction of the anemometer 0, 360° = North and if the Line Azimuth Min and Max settings are set identical to 0 or 180° or 360° for example this indicates a line running in the same direction in the North-South direction. With a multi-direction span of a transmission line, it may be unnecessary to specify the line's azimuth because all possible angles could be evaluated for the entire line. In this situation, the 'Line Azimuth Min' should be set to 0 and 'Line Azimuth Max' should be set to 180° to indicate all ranges of the effective angles between the wind direction and the conductor. In this case the effective wind angle to the line is taken as the worst case = 0°. The line azimuth significantly influences the effective angle between the wind and conductor line, which is an important variable to calculate convective cooling PC.				
Line Azimuth Max	180°	0°	360°	0.1°
Line Azimuth maximum setting. See above.				
T Conductor Max	50°C	0°C	300°C	0.1°C
Maximum allowable conductor temperature, used for calculating the line ampacity. This is based on the maximum conductor sag and annealing onset limits of the conductor.				
Ampacity Min	0.2 In	0.1 In	4 In	0.001 In
Minimum setting for the calculated ampacity. This setting is used to avoid over calculating of the line ampacity for the protection stages.				
Ampacity Max	2 In	0.1 In	4 In	0.001 In
Maximum setting for the calculated ampacity. This setting is used to avoid over calculating of the line ampacity for the protection stages. The rating of other components e.g. cables, joints and switchgear may limit the maximum ampacity.				
Drop-off Ratio	98%	70%	99%	0.1%
Reset ratio of the DLR protection settings.				
Line Direction	0°	0°	360°	0.1°
The Line Direction is used for calculating the dynamic and steady state conductor temperatures – 'Dyn Conduct Temp' and 'Steady Conduct T' in the Measurements 4 menu. 0, 360° = North. If the line direction is not constant then an average value could be used or the line angle of the most critical span could be used.				
DLR CHANNEL SET				
Ambient Temp	CLI1	Disabled, CLI1, CLI2, CLI3, CLI4		
Selection of current loop (transducer) input 1 or 2 or 3 or 4 for the ambient temperature measurement.				
Default Ambient T	20°C	-100°C	100°C	0.1°C
Default ambient temperature setting. This is used if the current loop input is disabled or faulty.				
Ambient T Corr	0°C	-50°C	50°C	0.1°C
The ambient temperature correction factor adds a temperature (+/-) to the measured temperature, ambient temperature = measured ambient temperature + Amb T Corr. This setting can be used to allow for shielding or altitude affects where the ambient temperature could be higher/lower at particular point on the line compared to where the ambient temperature sensor is positioned.				
Ambient T Min	-40°C	-100°C	100°C	0.1°C
Minimum ambient temperature value that will be used by the DLR algorithm.				
Ambient T Max	50°C	-100°C	100°C	0.1°C
Maximum ambient temperature value that will be used by the DLR algorithm.				
Ambient T AvgSet	Enabled	Disabled, Enabled		
Enables or disables the averaging function for the ambient temperature input only. The averaging function is used to average the ambient temperature input over the averaging time delay.				
Ambient T AvgDly	100 s	60 s	3600 s	10 s
Averaging time delay setting for the ambient temperature input.				
Amb T Input Type	4-20 mA	0-1 mA, 0-10 mA, 0-20 mA, 4-20 mA		

Menu Text	Default Setting	Setting Range		Step Size
		Min	Max	
Current loop (transducer) input type for the ambient temperature measurement.				
Amb T I/P Min	-40°C	-100°C	100°C	0.1°C
Ambient temperature current loop input minimum setting. Defines the lower range of the physical quantity measured by the transducer.				
Amb T I/P Max	50°C	-100°C	100°C	0.1°C
Ambient temperature current loop input maximum setting. Defines the upper range of the physical quantity measured by the transducer.				
Amb T I< Alarm	Disabled	Disabled, Enabled		
Enables or disables the ambient temperature current loop input alarm element.				
Amb T I< Alm Set	0.0035 A	0 A	0.004 A	0.0001 A
Pick-up setting for the ambient temperature current loop input undercurrent element used to supervise the 4-20mA input only.				
Wind Velocity	CLI2	Disabled, CLI1, CLI2, CLI3, CLI4		
Selection of current loop (transducer) input 1 or 2 or 3 or 4 for the wind velocity measurement.				
Default Wind Vel	0.5 m/s	0 m/s	60 m/s	0.01 m/s
Default wind velocity setting. This is used if the current loop input is disabled or faulty.				
Wind Vel Corr	100%	0%	150%	0.1%
The wind velocity correction factor is a multiplier for the wind velocity, wind velocity = measured wind velocity x (Wind Vel Corr/100). This setting can be used to allow for shielding or altitude affects where the wind velocity could be higher/lower at particular point on the line compared to where the wind velocity sensor is positioned.				
Wind Vel Min	0 m/s	0 m/s	60 m/s	0.01 m/s
Minimum wind velocity value that will be used by the DLR algorithm.				
Wind Vel Max	60 m/s	0 m/s	60 m/s	0.01 m/s
Maximum wind velocity value that will be used by the DLR algorithm.				
Wind Vel AvgSet	Enabled	Disabled, Enabled		
Enables or disables the averaging function for the wind velocity input only. The averaging function is used to average the wind velocity input over the averaging time delay.				
Wind Vel AvgDly	100 s	60 s	3600 s	10 s
Averaging time delay setting for the wind velocity input.				
WV Input Type	4-20 mA	0-1 mA, 0-10 mA, 0-20 mA, 4-20 mA		
Current loop (transducer) input type for the wind velocity measurement.				
WV I/P Minimum	0 m/s	0 m/s	60 m/s	0.01 m/s
Wind velocity current loop input minimum setting. Defines the lower range of the physical quantity measured by the transducer.				
WV I/P Maximum	60 m/s	0 m/s	60 m/s	0.01 m.s
Wind velocity current loop input maximum setting. Defines the upper range of the physical quantity measured by the transducer.				
WV I< Alarm	Disabled	Disabled, Enabled		
Enables or disables the wind velocity current loop input alarm element.				
WV I< Alarm Set	0.0035 A	0 A	0.004 A	0.0001 A
Pick-up setting for the wind velocity current loop input undercurrent element used to supervise the 4-20mA input only.				
Wind Direction	CLI3	Disabled, CLI1, CLI2, CLI3, CLI4		
Selection of current loop (transducer) input 1 or 2 or 3 or 4 for the wind direction measurement.				
Default Wind Dir	0°	0°	360°	0.1°
Default wind direction setting. This is used if the current loop input is disabled or faulty.				
Wind Dir Corr	0°	-180°	180°	0.1°

Menu Text	Default Setting	Setting Range		Step Size
		Min	Max	
The wind direction correction factor adds an angle (+/-) to the measured wind direction, wind direction = measured wind direction + Wind Dir Corr. The wind direction correction factor setting could be used to correct for errors in the measurement sensor. Typically, this setting is set to the default value of 0°.				
Wind Dir Min	0°	0°	360°	0.1°
Minimum wind direction value that will be used by the DLR algorithm.				
Wind Dir Max	0°	360°	360°	0.1°
Maximum wind direction value that will be used by the DLR algorithm.				
Wind Dir AvgSet	Enabled	Disabled, Enabled		
Enables or disables the averaging function for the wind direction input only. The averaging function is used to average the wind direction input over the averaging time delay.				
Wind Dir AvgDly	100 s	60 s	3600 s	10 s
Averaging time delay setting for the wind direction input.				
WD Input Type	4-20 mA	0-1 mA, 0-10 mA, 0-20 mA, 4-20 mA		
Current loop (transducer) input type for the wind direction measurement.				
WD I/P Minimum	0°	0°	360°	0.1°
Wind direction current loop input minimum setting. Defines the lower range of the physical quantity measured by the transducer.				
WD I/P Maximum	360°	0°	360°	0.1°
Wind direction current loop input maximum setting. Defines the upper range of the physical quantity measured by the transducer.				
WD I< Alarm	Disabled	Disabled, Enabled		
Enables or disables the wind direction current loop input alarm element.				
WD I< Alarm Set	0.0035 A	0 A	0.004 A	0.0001 A
Pick-up setting for the wind direction current loop input undercurrent element used to supervise the 4-20mA input only.				
Solar Radiation	CLI4	Disabled, CLI1, CLI2, CLI3, CLI4		
Selection of current loop (transducer) input 1 or 2 or 3 or 4 for the solar radiation measurement.				
Default Solar R	0 W	0 W	3000 W	1 W
Default solar radiation setting. This is used if the current loop input is disabled or faulty.				
Solar Rad Corr	0 W	-1000 W	1000 W	1 W
The solar radiation correction factor adds a solar radiation value (+/-) to the measured solar radiation, solar radiation = measured solar radiation + Solar Rad Corr. This setting can be used to allow for shielding or altitude affects where the solar radiation could be higher/lower at particular point on the line compared to where the solar radiation sensor is positioned.				
Solar Rad Min	1000 W	0 W	3000 W	1 W
Minimum solar radiation value that will be used by the DLR algorithm.				
Solar Rad Max	1000 W	0 W	3000 W	1 W
Maximum solar radiation value that will be used by the DLR algorithm.				
Solar Rad AvgSet	Enabled	Disabled, Enabled		
Enables or disables the averaging function for the wind direction input only. The averaging function is used to average the wind direction input over the averaging time delay.				
Solar Rad AvgDly	100 s	60 s	3600 s	10 s
Averaging time delay setting for the wind direction input.				
SR Input Type	4-20 mA	0-1 mA, 0-10 mA, 0-20 mA, 4-20 mA		
Current loop (transducer) input type for the solar radiation measurement.				
SR I/P Minimum	0 W	0 W	3000 W	1 W

Menu Text	Default Setting	Setting Range		Step Size
		Min	Max	
Solar radiation current loop input minimum setting. Defines the lower range of the physical quantity measured by the transducer.				
SR I/P Maximum	1000 W	0 W	3000 W	1 W
Solar radiation current loop input maximum setting. Defines the upper range of the physical quantity measured by the transducer.				
SR I< Alarm	Disabled	Disabled, Enabled		
Enables or disables the solar radiation current loop input alarm element.				
SR I< Alarm Set	0.0035 A	0 A	0.004 A	0.0001 A
Pick-up setting for the solar radiation current loop input undercurrent element used to supervise the 4-20 mA input only.				
DLR PROT SETTING				
DLR I>1 Trip	Enabled	Disabled, Enabled		
Enables or disables the DLR 1st stage element				
DLR I>1 Set	80%	20%	200%	0.1%
Pick-up setting for DLR 1st stage element as a percentage of the line ampacity.				
DLR I>1 Delay	100 s	0 s	30000 s	1 s
Operating time delay of the DLR 1st stage element.				
DLR I>2 Trip	Enabled	Disabled, Enabled		
Enables or disables the DLR 2nd stage element				
DLR I>2 Set	90%	20%	200%	0.1%
Pick-up setting for DLR 2nd stage element as a percentage of the line ampacity.				
DLR I>2 Delay	100 s	0 s	30000 s	1s
Operating time delay of the DLR 2nd stage element.				
DLR I>3 Trip	Enabled	Disabled, Enabled		
Enables or disables the DLR 3rd stage element				
DLR I>3 Set	95%	20%	200%	0.1%
Pick-up setting for DLR 3rd stage element as a percentage of the line ampacity.				
DLR I>3 Delay	100 s	0 s	30000 s	1s
Operating time delay of the DLR 3rd stage element.				
DLR I>4 Trip	Enabled	Disabled, Enabled		
Enables or disables the DLR 4th stage element				
DLR I>4 Set	97%	20%	200%	0.1%
Pick-up setting for DLR 4th stage element as a percentage of the line ampacity.				
DLR I>4 Delay	100 s	0 s	30000 s	1s
Operating time delay of the DLR 4th stage element.				
DLR I>5 Trip	Enabled	Disabled, Enabled		
Enables or disables the DLR 5th stage element				
DLR I>5 Set	99%	20%	200%	0.1%
Pick-up setting for DLR 5th stage element as a percentage of the line ampacity.				
DLR I>5 Delay	100 s	0 s	30000 s	1s
Operating time delay of the DLR 5th stage element.				
DLR I>6 Trip	Enabled	Disabled, Enabled		
Enables or disables the DLR 6th stage element				
DLR I>6 Set	100%	20%	200%	0.1%

Menu Text	Default Setting	Setting Range		Step Size
		Min	Max	
Pick-up setting for DLR 6th stage element as a percentage of the line ampacity.				
DLR I>6 Delay	100 s	0 s	30000 s	1 s
Operating time delay of the DLR 6th stage element.				

Table 18 - Dynamic rating protection settings

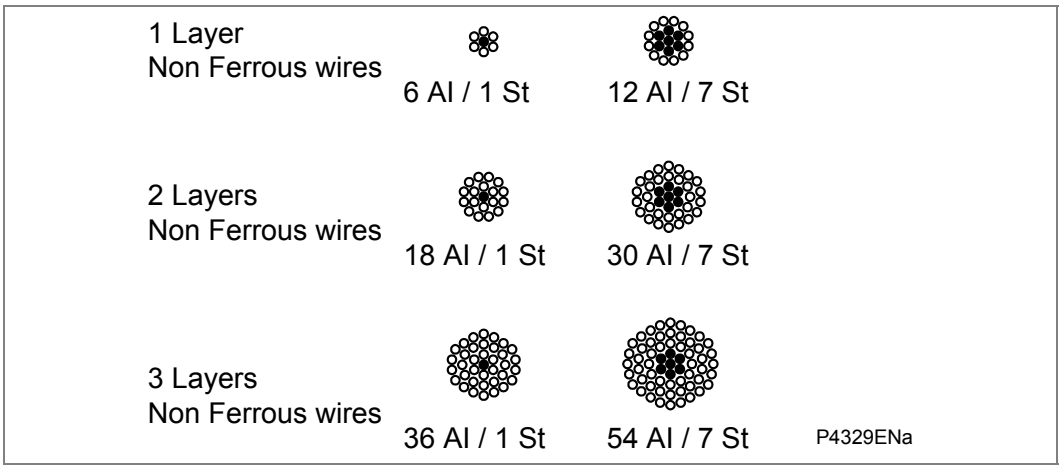

Figure 1 - Illustration of Non Ferrous Layers for ACSR

3.17 Input Labels

Menu text	Default setting	Setting range	Step size
GROUP 1: INPUT LABELS			
Opto Input 1	Input L1	16 Character Text	
Text label to describe each individual opto input. This text will be displayed in the programmable scheme logic and event record description of the opto input.			
Opto Input 2 to 24	Input L2 to L24	16 Character Text	
Text label to describe each individual opto input. This text will be displayed in the programmable scheme logic and event record description of the opto input.			

Table 19 - Input labels settings

3.18 Output labels

Menu text	Default setting	Setting range	Step size
GROUP 1: OUTPUT LABELS			
Relay 1	Output R1	16 Character Text	
Text label to describe each individual relay output contact. This text will be displayed in the programmable scheme logic and event record description of the relay output contact.			
Relay 2 to 24	Output R2 to R24	16 Character Text	
Text label to describe each individual relay output contact. This text will be displayed in the programmable scheme logic and event record description of the relay output contact.			

Table 20 - Output labels settings

3.19 Current Loop Inputs and Outputs (CLIO)

Four analog or current loop inputs are provided for transducers with ranges of 0 - 1 mA, 0 - 10, 0 - 20 mA or 4 - 20 mA. The analog inputs can be used for various transducers such as vibration monitors, tachometers and pressure transducers. Associated with each input there are two protection stages, one for alarm and one for trip. Each stage can be individually enabled or disabled and each stage has a definite time delay setting. The Alarm and Trip stages can be set for operation when the input value falls below the Alarm/Trip threshold 'Under' or when the input current is above the input value 'Over'. The 4-20 mA input has an undercurrent alarm element which can be used to indicate a fault with the transducer or wiring.

There are four analog current outputs with ranges of 0 - 1 mA, 0 - 10 mA, 0 - 20 mA or 4 - 20 mA which can reduce the need for separate transducers. These outputs can be fed to standard moving coil ammeters for analog measurements or to a SCADA system using an existing analog RTU.

Menu text	Default setting	Setting range		Step size
		Min.	Max.	
GROUP 1: CLIO Protection				
CLIO Input 1	Disabled	Disabled, Enabled		N/A
Enables or disables the current loop (transducer) input 1 element.				
CLI1 Input Type	4 - 20 mA	0 - 1 mA, 0 - 10 mA, 0 - 20 mA, 4 - 20 mA		N/A
Current loop 1 input type.				
CLI1 Input Label	CLIO Input 1	16 characters		
Current loop 1 input description. The minimum and maximum settings define the range but they have no units. The user can use the label to enter the transducer function and unit of measurement, e.g. Power MW, which is used in the Measurements 3 menu to describe the CLI1 measurement.				
CLI1 Minimum	0	-9999	9999	0.1
Current loop input 1 minimum setting. Defines the lower range of the physical or electrical quantity measured by the transducer.				
CLI1 Maximum	100	-9999	9999	0.1
Current loop input 1 maximum setting. Defines the upper range of the physical or electrical quantity measured by the transducer.				
CLI1 Alarm	Disabled	Disabled, Enabled		N/A
Enables or disables the current loop input 1 alarm element.				
CLI1 Alarm Fn	Over	Over, Under		N/A
Operating mode of the current loop input 1 alarm element.				
CLI1 Alarm Set	50	Min. (CLI1 Min., Max.)	Max. (CLI1 Min., Max.)	0.1
Pick-up setting for the current loop input 1 alarm element.				
CLI1 Alarm Delay	1 s	0 s	100 s	0.1s
Operating time-delay setting of current loop input 1 alarm element.				
CLI1 Trip	Disabled	Disabled, Enabled		N/A
Pick-up setting for the current loop input 1 trip element.				
CLI1 Trip Fn	Over	Over, Under		N/A
Operating mode of the current loop input 1 alarm element.				
CLI1 Trip Set	50	Min. (CLI1 Min., Max.)	Max. (CLI1 Min., Max.)	0.1
Pick-up setting for the current loop input 1 trip element.				
CLI1 Trip Delay	1 s	0 s	100 s	0.1 s

Menu text	Default setting	Setting range		Step size
		Min.	Max.	
GROUP 1: CLIO Protection				
Operating mode of the current loop input 1 trip element.				
CLI1 I< Alarm	Disabled	Disabled, Enabled		N/A
Enables or disables the current loop input 1 undercurrent element used to supervise the 4-20 mA input only.				
CLI1 I< Alm Set	3.5	0	4 mA	0.1 mA
Pick-up setting for the current loop input 1 undercurrent element. (4 - 20 mA input only).				
CLI2/3/4 settings are the same as CLI1				
CLIO Output 1	Disabled	Disabled, Enabled		N/A
Enable or disables the current loop (transducer) output 1 element.				
CLO1 Output Type	4 - 20 mA	0 - 1 mA, 0 - 10 mA, 0 - 20 mA, 4- 20 mA		
Current loop 1 output type				
CLO1 Set Values	Primary	Primary, Secondary		N/A
This setting controls if the measured values via current loop output 1 are Primary or Secondary values.				
CLO1 Parameter	IA Magnitude	A list of parameters are shown in the table below		N/A
This setting defines the measured quantity assigned to current loop output 1.				
CLO1 Minimum	0	Range, step size and unit corresponds to the selected parameter in the table below		N/A
Current loop output 1 minimum setting. Defines the lower range of the measurement.				
CLO1 Maximum	1.2 In	Range, step size and unit corresponds to the selected parameter in the table below		N/A
Current loop output 1 maximum setting. Defines the upper range of the measurement.				
CLO2/3/4 settings are the same as CLO1				

Table 21 - Current loop inputs and outputs settings

The CLIO output conversion task runs every 50 ms and the refresh interval for the output measurements is nominally 50 ms. The exceptions are marked with an asterisk in the table of current loop output parameters below. Those exceptional measurements are updated once every second.

Current loop output parameters are shown in the following table:

Current loop output parameter	Abbreviation	Units	Range	Step	Default min.	Default max.
Current Magnitude	IA Magnitude IB Magnitude IC Magnitude IN Derived Mag	A	0 to 16 A	0.01 A	0 A	1.2 A
Sensitive Current Input Magnitude	I Sen Magnitude	A	0 to 2 A	0.01 A	0 A	1.2 A
Phase Sequence Current Components	I1 Magnitude I2 Magnitude I0 Magnitude	A	0 to 16 A	0.01 A	0 A	1.2 A
RMS Phase Currents	IA RMS* IB RMS* IC RMS*	A	0 to 16 A	0.01 A	0 A	1.2 A

Current loop output parameter	Abbreviation	Units	Range	Step	Default min.	Default max.
P-P Voltage Magnitude	VAB Magnitude VBC Magnitude VCA Magnitude	V	0 to 200 V	0.1 V	0 V	140 V
P-N voltage Magnitude	VAN Magnitude VBN Magnitude VCN Magnitude	V	0 to 200 V	0.1 V	0 V	80 V
Neutral Voltage Magnitude	VN Measured Mag. VN Derived Mag.	V	0 to 200 V	0.1V	0V	80 V
Phase Sequence Voltage Components	V1 Magnitude* V2 Magnitude V0 Magnitude	V	0 to 200 V	0.1 V	0 V	80 V
RMS Phase Voltages	VAN RMS* VBN RMS* VCN RMS*	V	0 to 200 V	0.1 V	0 V	80 V
Frequency	Frequency	Hz	0 to 70 Hz	0.01 Hz	45 Hz	65 Hz
3 Ph Active Power	Three-Phase Watts*	W	-6000 W to 6000 W	1 W	0 W	300 W
3 Ph Reactive Power	Three-Phase Vars*	Var	-6000 Var to 6000 Var	1 Var	0 Var	300 Var
3 Ph Apparent Power	Three-Phase VA*	VA	0 to 6000 VA	1 VA	0 VA	300 VA
3 Ph Power Factor	3Ph Power Factor*	-	-1 to 1	0.01	0	1
Single-Phase Active Power	A Phase Watts* B Phase Watts* C Phase Watts*	W	-2000 W to 2000 W	1 W	0 W	100 W
Single-Phase Reactive Power	A Phase Vars* B Phase Vars* C Phase Vars*	Var	-2000 Var to 2000 Var	1 Var	0 Var	100 Var
Single-Phase Apparent Power	A Phase VA* B Phase VA* C Phase VA*	VA	0 to 2000 VA	1 VA	0 VA	100 VA
Single-Phase Power Factor	APh Power Factor* BPh Power Factor* CPh Power Factor*		-1 to 1	0.01	0	1
Three-Phase Current Demands	IA Fixed Demand* IB Fixed Demand* IC Fixed Demand* IA Roll Demand* IB Roll Demand* IC Roll Demand* IA Peak Demand* IB Peak Demand* IC Peak Demand*	A	0 to 16 A	0.01 A	0 A	1.2 A
3Ph Active Power Demands	3Ph W Fix Demand* 3Ph W Roll Dem* 3Ph W Peak Dem*	W	-6000 W to 6000 W	1 W	0 W	300 W
3Ph Reactive Power Demands	3Ph Vars Fix Dem* 3Ph Var Roll Dem* 3Ph Var Peak Dem*	Var	-6000 Var to 6000 Var	1 Var	0 Var	300 Var

Current loop output parameter	Abbreviation	Units	Range	Step	Default min.	Default max.
Current Loop Inputs	CL Input 1 CL Input 2 CL Input 3 CL input 4	-	-9999 to 9999	0.1	0	9999
DLR Ampacity	DLR Ampacity	A	0 to 4 In	0.001 In	0	4 In
Maximum ac current	Max Iac	A	0 to 16 In	0.01 In	0	1.2 In
df/dt	df/dt	Hz/s	-10 to 10 Hz/s	0.01 Hz/s	-1 Hz/s	1 Hz/s
Check Synch Voltages	C/S Voltage Mag C/S Bus Gen-Mag	V	0 to 200 V	0.1 V	0 V	80 V
Slip Frequency	Slip frequency	Hz	0 to 70 Hz	0.01 Hz	-0.5 Hz	0.5 Hz

Table 22 - Current loop outputs units and setting range

Note 1: *For measurements marked with an asterisk, the internal refresh rate is nominally 1 s, others are 0.5 power system cycle or less.*

Note 2: *The polarity of Watts, Vars and power factor is affected by the Measurements Mode setting.*

Note 3: *These settings are for nominal 1A and 100/120 V versions only. For other nominal versions they need to be multiplied accordingly.*

3.20 System Checks (Check Sync. Function)

The P34x has a two stage Check Synchronization function that can be set independently.

Menu text	Default setting	Setting range		Step size
		Min.	Max.	
SYSTEM CHECKS GROUP 1				
VOLTAGE MONITORS	Sub-heading			
Live Voltage	32 V	1 V (Vn=100/120 V) 4 V (Vn=380/480 V)	132 V (Vn=100/120 V) 528V (Vn=380/480 V)	0.5 V (Vn=100/120 V) 2 V (Vn=380/480 V)
Minimum voltage setting above which a generator or busbar is recognized as being 'Live'.				
Dead Voltage	13 V	1 V (Vn=100/120 V) 4 V (Vn=380/480 V)	132 V (Vn=100/120 V) 528 V (Vn=380/480 V)	0.5 V (Vn=100/120 V) 2 V (Vn=380/480 V)
Overvoltage setting below which the generator voltage must be satisfied for the Check Sync. condition if V> is selected in the CS Voltage Block cell.				
Gen Undervoltage	54 V	1 V (Vn=100/120 V) 22 V (Vn=380/480 V)	132 V (Vn=100/120 V) 528 V (Vn=380/480 V)	0.5 V (Vn=100/120 V) 2 V (Vn=380/480 V)
Undervoltage setting above which the generator voltage must be satisfied for the Check Sync. condition if V< is selected in the CS Voltage Block cell.				
Gen Overvoltage	130	1 V (Vn=100/120 V) 22 V (Vn=380/480 V)	182 V (Vn=100/120 V) 740 V (Vn=380/480 V)	0.5 V (Vn=100/120 V) 2 V (Vn=380/480 V)
Overvoltage setting which the generator voltage must be satisfied for the Check Sync. condition if **V>** is selected in the **CS Voltage Block** cell.				
Bus Undervoltage	54 V (Vn=100/120 V) 216 V (Vn=380/480 V)	10 V (Vn=100/120 V) 40 V (Vn=380/480 V)	132 V (Vn=100/120 V) 528 V (Vn=380/480 V)	0.5 V (Vn=100/120 V) 2 V (Vn=380/480 V)
Undervoltage setting above which the busbar voltage must be satisfied for the Check Sync. condition if V< is selected in the CS Voltage Block cell..				
Bus Overvoltage	130 V (Vn=100/120 V) 520 V (Vn=380/480 V)	60 V (Vn=100/120 V) 240 V (Vn=380/480 V)	185 V (Vn=100/120 V) 740 V (Vn=380/480 V)	0.5 V (Vn=100/120 V) 2 V (Vn=380/480 V)
Overvoltage setting below which the busbar voltage must be satisfied for the Check Sync. condition if V> is selected in the CS Voltage Block cell.				
CS Diff Voltage	6.5 V (Vn=100/120 V) 26 V (Vn=380/480 V)	1 V (Vn=100/120 V) 4 V (Vn=380/480 V)	132 V (Vn=100/120 V) 528 V (Vn=380/480 V)	0.5 V (Vn=100/120 V) 2 V (Vn=380/480 V)
Voltage magnitude difference setting between the generator and busbar volts below which the generator and bus voltage difference must be satisfied for the Check Sync. condition if selected in the CS Voltage Block cell.				
CS Voltage Block	V<	None, V<, V>, Vdiff>, V< and V>, V< and Vdiff>, V> and Vdiff>, V< V> Vdiff>		
Selects the undervoltage(V<), overvoltage (V>) and voltage difference (Vdiff>) voltage blocking options for the generator and bus voltages that must be satisfied in order for the Check Sync. conditions to be satisfied.				

Menu text	Default setting	Setting range		Step size
		Min.	Max.	
SYSTEM CHECKS GROUP 1				
Gen Under Freq	49.5 Hz	45 Hz	65 Hz	0.01 Hz
Underfrequency setting for the generator. This setting only affects DDB 1347 Freq Low which indicates the generator frequency is less than the Gen Under Freq setting.				
Gen Over Freq	50.5 Hz	45 Hz	65 Hz	0.01 Hz
Overfrequency setting for the generator. This setting only affects DDB 1348 Freq High which indicates the generator frequency is less than the Gen Under Freq setting				
CHECK SYNC.	Sub-heading			
CS1 Status	Enabled	Disabled, Enabled		
Enables or disables the first stage check sync. element.				
CS1 Phase Angle	20.00°	5°	90°	1°
Maximum phase angle difference setting between the line and bus voltage for the first stage check sync. element phase angle criteria to be satisfied.				
CS1 Slip Control	Frequency	None, Timer Only, Frequency Only, Frequency + Timer		
Slip control method - slip frequency only, frequency + timer or timer only criteria to satisfy the first stage check sync. conditions. If slip control by timer or frequency + timer is selected, the combination of phase angle and timer settings determines an effective maximum slip frequency, calculated as: $\frac{2 \times A}{T \times 360}$ Hz. for Check Sync. 1, or where A = Phase angle setting (°) T = Slip timer setting (seconds) For example, with Check Sync. 1 Phase Angle setting 30° and Timer setting 3.3 sec, the “slipping” vector has to remain within ±30° of the reference vector for at least 3.3 seconds. Therefore a synch check output will not be given if the slip is greater than 2 x 30° in 3.3 seconds. Using the formula: 2 x 30 ÷ (3.3 x 360) = 0.0505 Hz (50.5 mHz). If Slip Control by Frequency + Timer is selected, for an output to be given, the slip frequency must be less than BOTH the set Slip Freq. value and the value determined by the Phase Angle and Timer settings. If Slip Control by Frequency, for an output to be given, the slip frequency must be less than the set Slip Freq. value setting only.				
CS1 Slip Freq.	50 mHz	10 mHz	1 Hz	10 mHz
Maximum frequency difference setting between the generator and bus voltage for the first stage check sync. element slip frequency to be satisfied.				
CS1 Slip Timer	1 s	0 s	99 s	0.01 s
Minimum operating time-delay setting for the first stage check sync. element.				
CS2 Status	Enabled	Disabled, Enabled		
Enable or disables the second stage check sync. element.				
CS2 Phase Angle	20.00°	5°	90°	1°
Maximum phase angle difference setting between the line and bus voltage for the second stage check sync. element phase angle criteria to be satisfied.				
CS2 Slip Control	Frequency	None, Timer Only, Frequency Only, Frequency + Timer, Frequency + CB		

Menu text	Default setting	Setting range		Step size
		Min.	Max.	
SYSTEM CHECKS GROUP 1				
Slip control method - slip frequency only, frequency + timer or timer only criteria to satisfy the CS1 conditions. If Slip Control by Timer or Frequency + Timer is selected, the combination of Phase Angle and Timer settings determines an effective maximum slip frequency, calculated as: $\frac{A}{T \times 360}$ Hz. for Check Sync. 2, or where A = Phase angle setting (°) T = Slip timer setting (seconds) For Check Sync. 2, with Phase Angle setting 10° and Timer setting 0.1 sec, the slipping vector has to remain within 10° of the reference vector, with the angle decreasing, for 0.1 sec. When the angle passes through zero and starts to increase, the synch check output is blocked. Therefore an output will not be given if slip is greater than 10° in 0.1 second. Using the formula: 10 ÷ (0.1 x 360) = 0.278 Hz (278 mHz). If Slip Control by Frequency + Timer is selected, for an output to be given, the slip frequency must be less than BOTH the set Slip Freq. value and the value determined by the Phase Angle and Timer settings. If Slip Control by Frequency, for an output to be given, the slip frequency must be less than the set Slip Freq. value setting only. The Freq. + Comp. (Frequency + CB Time Compensation) setting modifies the Check Sync. 2 function to take account of the circuit breaker closing time. By measuring the slip frequency, and using the CB Close Time setting as a reference, the relay will issue the close command so that the circuit breaker closes at the instant the slip angle is equal to the CS2 phase angle setting. Unlike Check Sync. 1, Check Sync. 2 only permits closure for decreasing angles of slip, therefore the circuit breaker should always close within the limits defined by Check Sync. 2.				
CS2 Slip Freq.	50 mHz	10 mHz	1 Hz	10 mHz
Slip frequency setting for the second stage check sync. element.				
CS2 Slip Timer	1 s	0 s	99 s	0.01 s
Second stage Check Sync. slip timer setting.				
SYSTEM SPLIT	Sub-heading			
SS Status	Enabled	Disabled, Enabled		
Enables or disables the system split function.				
SS Phase Angle	120°	90°	175°	1°
Maximum phase angle difference setting between the generator and bus voltage, which must be exceeded, for the System Split condition to be satisfied.				
SS Under V Block	Enabled	Disabled, Enabled		
Activates the system split undervoltage block criteria				
SS Undervoltage	54 V (Vn=100/120 V) 216 V (Vn=380/480 V)	10 V (Vn=100/120 V) 40 V (Vn=380/480 V)	132 V (Vn=100/120 V) 528 V (Vn=380/480 V)	0.5 V (Vn=100/120 V) 2 V (Vn=380/480 V)
Undervoltage setting above which the generator and bus voltage must be satisfied for the System Split condition.				
SS Timer	1 s	0 s	99 s	0.01 s
The System Split output remains set for as long as the System Split criteria are true, or for a minimum period equal to the System Split Timer setting, whichever is longer.				
CB Close Time	50 ms	0 s	0.5 s	1 ms
Circuit breaker closing time setting used in the second stage Check Sync. criteria to compensate for the breaker closing time if selected.				

Table 23 - System checks settings

4 CONTROL AND SUPPORT SETTINGS

The control and support settings are part of the main menu and are used to configure the relays global configuration. It includes the following submenu settings.

- Relay function configuration settings
- Open/close circuit breaker
- CT & VT ratio settings
- Reset LEDs
- Active protection setting group
- Password & language settings
- Circuit breaker control & monitoring settings
- Communications settings
- Measurement settings
- Event & fault record settings
- User interface settings
- Commissioning settings

4.1 System Data

This menu provides information for the device and general status of the relay.

Menu text	Default setting	Setting range		Step size
		Min.	Max.	
SYSTEM DATA				
Language	English	English, Francais, Deutsch, Espanol or English, Francais, Deutsch, Русский or English, Francais, 中文(Chinese)		N/A
The default language used by the device. Selectable as: English, French, German, Spanish (language order option 0) or English, French, German, Russian (Русский) (language order option 5) or English, French, Chinese (中文) (language order option C)				
Password	****			
Device password for level 1 or 2. If password level 1 is input then the access level is set as 1 and if password level 2 is input then the access level is set as 2.				
Sys. Fn. Links	0			1
Setting to allow the fixed function trip LED to be self resetting, 1= self reset, 0 = latched.				
Description	P341			
16 character relay description. Can be edited.				
Plant Reference	Schneider Electric			
Plant description. Can be edited.				
Model Number	P341?11???0360J			
Relay model number.				

Menu text	Default setting	Setting range		Step size
		Min.	Max.	
SYSTEM DATA				
Serial Number	149188B			
Relay serial number.				
Frequency	50 Hz	50 Hz	60 Hz	10 Hz
Relay set frequency. Settable as 50 or 60 Hz.				
Comms. Level				
Displays the conformance of the relay to the Courier Level 2 comms.				
Relay Address				
Sets the first rear port relay address.				
Plant Status	0000000000000000			
Displays the circuit breaker plant status for up to 8 circuit breakers. The P341 relay supports only a single circuit breaker configuration.				
Control Status	0000000000000000			
Not used.				
Active Group	1			
Displays the active settings group.				
CB Trip/Close	No Operation, Trip, Close			
Used to control trip or control close a CB.				
Software Ref. 1	P341____1__360_A			
Software Ref. 2				
Displays the relay software version including protocol and relay model. Software Ref. 2 is displayed for relays with IEC 61850 protocol only and this will display the software version of the Ethernet card.				
Opto I/P Status	0000000000000000			
This menu cell displays the status of the relay's opto-isolated inputs as a binary string, a '1' indicating an energized opto-isolated input and a '0' a de-energized one.				
Relay O/P Status	0000001000000000			
This menu cell displays the status of the relay's output contacts as a binary string, a '1' indicating an operated state and '0' a non-operated state.				
Alarm Status 1	00000000000000000000000000000000			
This menu cell displays the status of the first 32 alarms as a binary string, a '1' indicating an ON state and '0' an OFF state. Includes fixed and user settable alarms. See Data Type G96 in the Menu Database document, *P341/EN/MD* for details.				
Opto I/P Status	0000000000000000			
Duplicate. Displays the status of opto inputs.				
Relay O/P Status	0000001000000000			
Duplicate. Displays the status of output contacts.				
Alarm Status 1	00000000000000000000000000000000			
Duplicate of Alarm Status 1 above.				
Alarm Status 2	00000000000000000000000000000000			
This menu cell displays the status of the second 32 alarms as a binary string, a '1' indicating an ON state and '0' an OFF state. See Data Type G128 in the Menu Database document, *P341/EN/MD* for details.				
Alarm Status 3	00000000000000000000000000000000			
This menu cell displays the status of the third 32 alarms as a binary string, a '1' indicating an ON state and '0' an OFF state. Assigned specifically for platform alarms. See Data Type G228 in the Menu Database document, *P341/EN/MD* for details.				
Access Level	2			

Menu text	Default setting	Setting range		Step size
		Min.	Max.	
SYSTEM DATA				
Access Level. Read only. The table below describes the password control.				
Set the "Password Control" cell to	The "Access Level" cell displays	Operations		Type of Password required
0	0	**Read** access to all settings, alarms, event records and fault records		None
0	0	**Execute** Control Commands, e.g. circuit breaker open/close. Reset of fault and alarm conditions. Reset LEDs. Clearing of event and fault records.		Level 1 Password
0	0	**Edit** all other settings		Level 2 Password
1	1	**Read** access to all settings, alarms, event records and fault records		None
1	1	**Execute** Control Commands, e.g. circuit breaker open/close. Reset of fault and alarm conditions. Reset LEDs. Clearing of event and fault records.		None
1	1	**Edit** all other settings		Level 2 Password
2 (Default)	2(Default)	**Read** access to all settings, alarms, event records and fault records		None
2 (Default)	2(Default)	**Execute** Control Commands, e.g. circuit breaker open/close. Reset of fault and alarm conditions. Reset LEDs. Clearing of event and fault records.		None
2 (Default)	2(Default)	**Edit** all other settings		None
Password Control	2	0	2	1
Sets the menu access level for the relay. This setting can only be changed when level 2 access is enabled.				
Password Level 1	****			
Password level 1 setting (4 characters).				
Password Level 2	****			
Password level 2 setting (4 characters).				

Table 24 - System data

4.2 View records

This menu provides information on fault and maintenance records. The relay will record the last 5 fault records and the last 10 maintenance records.

Menu text	Default setting	Setting range		Step size
		Min.	Max.	
VIEW RECORDS				
Select Event	0	0	512	
Setting range from 0 to 249. This selects the required event record from the possible 250 that may be stored. A value of 0 corresponds to the latest event and so on.				
Menu Cell Ref	(From record)	Latched alarm active, Latched alarm inactive, Self reset alarm active, Self reset alarm inactive, Relay contact event, Opto-isolated input event, Protection event, General event, Fault record event, Maintenance record event		
Indicates the type of event.				
Time and Date	Data			
Time & Date Stamp for the event given by the internal Real Time Clock.				
Event text	Data.			
Up to 32 Character description of the Event. See event sheet in the Relay Menu Database document, *P341/EN/MD* or Measurements and Recording chapter, *P341/EN MR* for details.				
Event Value	Data.			
32 bit binary string indicating ON or OFF (1 or 0) status of relay contact or opto input or alarm or protection event depending on event type. Unsigned integer is used for maintenance records. See event sheet in the Relay Menu Database document, *P341/EN/MD* or the Measurements and Recording chapter, *P341/EN MR* for details.				
Select Fault	0	0	4	1
Setting range from 0 to 4. This selects the required fault record from the possible 5 that may be stored. A value of 0 corresponds to the latest fault and so on.				
Faulted Phase	00000000			
Displays the faulted phase as a binary string, bits 0 – 8 = Start A/B/C/N Trip A/B/C/N.				
Start elements 1	00000000000000000000000000000000			
32 bit binary string gives status of first 32 start signals. See Data Type G84 in the Relay Menu Database document, *P341/EN/MD* for details.				
Start elements 2	00000000000000000000000000000000			
32 bit binary string gives status of second 32 start signals. See Data Type G107 in the Relay Menu Database document, *P341/EN/MD* for details.				
Start elements 3	00000000000000000000000000000000			
32 bit binary string gives status of third 32 start signals. See Data Type G129 in the Relay Menu Database document, *P341/EN/MD* for details.				
Trip elements 1	00000000000000000000000000000000			
32 bit binary string gives status of first 32 trip signals. See Data Type G85 in the Relay Menu Database document, *P34x/EN/MD* for details.				
Trip elements 2	00000000000000000000000000000000			
32 bit binary string gives status of second 32 trip signals. See Data Type G86 in the Relay Menu Database document, *P341/EN/MD* for details.				
Trip elements 3	00000000000000000000000000000000			
32 bit binary string gives status of third 32 trip signals. See Data Type G130 in the Relay Menu Database document, *P341/EN/MD* for details.				
Trip elements 4	00000000000000000000000000000000			
32 bit binary string gives status of third 32 trip signals. See Data Type G132 in the Relay Menu Database document, *P341/EN/MD* for details.				

Menu text	Default setting	Setting range		Step size
		Min.	Max.	
VIEW RECORDS				
Fault Alarms	0000001000000000			
32 bit binary string gives status of fault alarm signals. See Data Type G87 in the Relay Menu Database document, *P341/EN/MD* for details.				
Fault Alarms2	0000001000000000			
32 bit binary string gives status of fault alarm signals. See Data Type G89 in the Relay Menu Database document, *P341EN/MD* for details.				
Fault Time	Data.			
Fault time and date.				
Active Group	Data.			
Active setting group 1-4.				
System Frequency	Data			
System frequency.				
Fault Duration				
Fault duration. Time from the start or trip until the undercurrent elements indicate the CB is open.				
CB Operate Time	Data.			
CB operating time. Time from protection trip to undercurrent elements indicating the CB is open.				
Relay Trip Time	Data.			
Relay trip time. Time from protection start to protection trip.				
The following cells provide measurement information of the fault : IA, IB, IC, VAB, VBC, VCA, VAN, VBN, VCN,VN Measured, VN Derived, I Sensitive, I2, V2, 3 Phase Watts, 3 Phase VARs, 3Ph Power Factor, df/dt, V Vector Shift, CLIO Input 1-4, df/dt, DLR Ambient Temp, Wind Velocity, Wind Direction, Solar Radiation, DLR Ampacity, DLR CurrentRatio				
Select Maint	0	0	4	1
Setting range from 0 to 4. This selects the required maintenance report from the possible 10 that may be stored. A value of 0 corresponds to the latest report and so on.				
Maint Text	Data.			
Up to 32 Character description of the occurrence. See the Measurements and Recording chapter, *P34x/EN MR* for details.				
Maint Type	Data.			
Maintenance record fault type. This will be a number defining the fault type.				
Maint Data	0	0	4	1
Error code associated with the failure found by the self monitoring. The Maint Type and Data cells are numbers representative of the occurrence. They form a specific error code which should be quoted in any related correspondence to Report Data.				
Reset Indication	No	No, Yes		N/A
Resets latched LEDs and latched relay contacts provided the relevant protection element has reset.				

Table 25 - View records settings

4.3 Measurements 1

This menu provides measurement information.

Menu text	Default setting	Setting range		Step size
		Min.	Max.	
MEASUREMENTS 1				
IA Magnitude	Data.			
IA Phase Angle	Data.			
IB Magnitude	Data.			
IB Phase Angle	Data.			
IC Magnitude	Data.			
IC Phase Angle	Data.			
IN Derived Mag	Data. IN = IA+IB+IC, P341			
IN Derived Angle	Data.			
I Sen Magnitude	Data.			
I Sen Angle	Data.			
I1 Magnitude	Data. Positive sequence current.			
I2 magnitude	Data. Negative sequence current.			
I0 Magnitude	Data. Zero sequence current.			
IA RMS	Data.			
IB RMS	Data.			
IC RMS	Data.			
VAB Magnitude	Data.			
VAB Phase Angle	Data.			
VBC Magnitude	Data.			
VBC Phase Angle	Data.			
VCA Magnitude	Data.			
VCA Phase Angle	Data.			
VAN Magnitude	Data.			
VAN Phase Angle	Data.			
VBN Magnitude	Data.			
VBN Phase Angle	Data.			
VCN Magnitude	Data.			
VCN Phase Angle	Data.			
VN Measured Mag	Data.			
VN Measured Ang	Data.			
VN Derived Mag	Data. VN = VA+VB+VC.			
VN Derived Ang	Data.			
V1 Magnitude	Data. Positive sequence voltage.			
V2 Magnitude	Data. Negative sequence voltage.			
V0 Magnitude	Data. Zero sequence voltage.			
VAN RMS	Data.			
VBN RMS	Data.			
VCN RMS	Data.			
Frequency	Data.			

Menu text	Default setting	Setting range		Step size
		Min.	Max.	
MEASUREMENTS 1				
I1 Magnitude	Data. Positive sequence current.			
I1 Phase Angle				
I2 Magnitude	Data. Negative sequence current			
I2 Phase Angle	Data.			
I0 Magnitude	Data. Zero sequence current.			
I0 Phase Angle	Data.			
V1 Magnitude	Data. Positive sequence voltage.			
V1 Phase Angle				
V2 Magnitude	Data. Negative sequence voltage.			
V2 Phase Angle				
V0 Magnitude	Data. Zero sequence voltage.			
V0 Phase Angle				
C/S Voltage Mag	Data. Check synchronization voltage.			
C/S Voltage Ang	Data. Check synchronization voltage.			
CS Gen-Bus Volt	Data. The difference voltage magnitude between generator and busbar.			
CS Gen-Bus Angle	Data. The difference voltage angle between generator and busbar.			
Slip Frequency	Data. The difference frequency between generator and busbar.			
CS Frequency	Data. The frequency from the check synch voltage input.			

Table 26 - Measurement 1 menu

4.4 Measurements 2

This menu provides measurement information.

Menu text	Default setting	Setting range		Step size
		Min.	Max.	
MEASUREMENTS 2				
A Phase Watts	Data.			
B Phase Watts	Data.			
C Phase Watts	Data.			
A Phase VARs	Data.			
B Phase VARs	Data.			
C Phase VARs	Data.			
A Phase VA	Data.			
B Phase VA	Data.			
C Phase VA	Data.			
3 Phase Watts	Data.			
3 Phase VARs	Data.			
3 Phase VA	Data.			
3Ph Power Factor	Data.			
APh Power Factor	Data.			
BPh Power Factor	Data.			

Menu text	Default setting	Setting range		Step size
		Min.	Max.	
MEASUREMENTS 2				
CPh Power Factor	Data.			
3Ph WHours Fwd	Data.			
3Ph WHours Rev	Data.			
3Ph VArHours Fwd	Data.			
3Ph VArHours Rev	Data.			
3Ph W Fix Demand	Data.			
3Ph VAr Fix Demand	Data.			
IA Fixed Demand	Data.			
IB Fixed Demand	Data.			
IC Fixed Demand	Data.			
3Ph W Roll Demand	Data.			
3Ph VAr Roll Demand	Data.			
IA Roll Demand	Data.			
IB Roll Demand	Data.			
IC Roll Demand	Data.			
3Ph W Peak Demand	Data.			
3Ph VAr Peak Demand	Data.			
IA Peak Demand	Data.			
IB Peak Demand	Data.			
IC Peak Demand	Data.			
Reset Demand	No	No, Yes		N/A
Reset demand measurements command. Can be used to reset the fixed, rolling and peak demand value measurements to 0.				

Table 27 - Measurement 2 menu

4.5 Measurements 3

This menu provides measurement information.

Menu text	Default setting	Setting range		Step size
		Min.	Max.	
MEASUREMENTS 3				
APh Sen Watts	Data.			
APh Sen VArs	Data.			
APh Power Angle	Data.			
Thermal Overload	Data. Thermal state.			
Reset Thermal O/L	No	No, Yes		N/A
Reset thermal overload command. Resets thermal state to 0.				
CLIO Input 1	Data. Current loop (transducer) input 1.			
CLIO Input 2	Data. Current loop (transducer) input 2.			
CLIO Input 3	Data. Current loop (transducer) input 3.			
CLIO Input 4	Data. Current loop (transducer) input 4.			

Menu text	Default setting	Setting range		Step size
		Min.	Max.	
MEASUREMENTS 3				
df/dt	Data. Rate of change of frequency			

Table 28 - Measurement 3 menu

4.6 Measurements 4

This menu provides measurement information for the dynamic line rating protection used in the P341 version 7x software.

Menu text	Default setting	Setting range		Step size
		Min.	Max.	
MEASUREMENTS 4				
Max Iac	Data. Maximum phase current. (P341 7x)			
DLR Ambient Temp	Data. Ambient Temperature from current loop input. (P341 7x)			
Wind Velocity	Data. Wind Velocity from current loop input. (P341 7x)			
Wind Direction	Data. Wind Direction from current loop input. (P341 7x)			
Solar Radiation	Data. Solar Radiation from current loop input. (P341 7x)			
Effct wind angle	Data. Effective Wind Angle. Intermediate parameter calculated when calculating the convective cooling Pc. (P341 7x)			
Pc	Data..Convective cooling, takes the maximum value of ‘Pc, natural’, ‘Pc1, forced’, and ‘Pc2, forced’. (P341 7x)			
Pc, natural	Data..Natural convective cooling, an intermediate value changed according to the selected standard (CIGRE or IEEE). (P341 7x)			
Pc1, forced	Data. Forced convective cooling at low wind speed, an intermediate value changed according to the selected standard (CIGRE or IEEE). (P341 7x)			
Pc2, forced	Data. Forced convective cooling at high wind speed, an intermediate value changed according to the selected standard (CIGRE or IEEE). (P341 7x)			
DLR Ampacity	Data. Calculated Ampacity (Amps). (P341 7x)			
DLR CurrentRatio	Data. Ratio of the maximum phase current and the calculated ampacity as a percentage. (P341 7x)			
Dyn Conduct Temp	Data. Real Time/Dynamic conductor temperature. (P341 7x)			
Steady Conduct T	Data. Steady State conductor temperature. (P341 7x)			
Time Constant	Data. Conductor thermal time constant. (P341 7x)			

Table 29 - Measurement 4 menu

4.7 Circuit Breaker Condition

The P341 relays include measurements to monitor the CB condition.

Menu text	Default setting	Setting range		Step size
		Min.	Max.	
CB CONDITION				
CB Operations	Data. Number of CB trip operations.			
Total IA Broken	Data. Accumulated broken current for A phase protection trip.			
Total IB Broken	Data. Accumulated broken current for B phase protection trip.			
Total IC Broken	Data. Accumulated broken current for C phase protection trip.			
CB Operate Time	Data. CB operating time = time from protection trip to undercurrent elements indicating the CB is open.			
CB Close Time	Data. Circuit breaker close time = time from protection close to undercurrent elements indicating the CB is closed.			
Reset CB Data	No	No, Yes		N/A
Reset CB Data command. Resets CB Operations and Total IA/IB/IC broken current counters to 0.				

Table 30 - Circuit breaker condition menu

4.8 Circuit Breaker Control

The P341 relays include settings to reset CB condition monitoring lockout alarms and set the type of CB auxiliary contacts that will be used to indicate the CB position.

Menu text	Default setting	Setting range		Step size
		Min.	Max.	
CB CONTROL				
CB Control by	Disabled	Disabled, Local, Remote, Local+Remote, Opto, Opto+local, Opto+Remote, Opto+Rem+Local		
CB control mode setting.				
Close Pulse Time	0.5 s	0.1 s	10.00 s	0.01 s
Duration of the CB close pulse.				
Trip Pulse Time	0.5 s	0.1 s	5.00 s	0.01 s
Duration of CB trip pulse.				
Man Close Delay	10 s	0.01 s	600 s	0.01 s
Time delay setting before the close pulse is executed.				
CB Healthy Time	5 s	0.01 s	9999 s	0.01 s
CB Healthy time delay check for manual CB closing. If the circuit breaker does not indicate a healthy condition in this time period following a close command then the relay will lockout and alarm.				
Lockout Reset	No	No, Yes		N/A
Reset Lockout command. Can be used to reset the CB condition monitoring lockout alarms.				
Reset Lockout By	CB Close	User Interface, CB Close		N/A
Setting to determines if a lockout condition will be reset by a manual circuit breaker close command or via the user interface.				
Man Close RstDly	5 s	0.01 s	600 s	0.01 s
The manual close reset time. A lockout is automatically reset following a manual close after this time delay.				
CB Status Input	None	None, 52A, 52B, Both 52A and 52B		N/A

Menu text	Default setting	Setting range		Step size
		Min.	Max.	
CB CONTROL				
Setting to define the type of circuit breaker contacts that will be used for the circuit breaker control logic.				

Table 31 - Circuit breaker control settings

4.9 Date and Time

The date, time and battery condition are displayed.

Menu text	Default setting	Setting range		Step size
		Min.	Max.	
DATE AND TIME				
Date/Time	Data			
Displays the relay's current date and time.				
IRIG-B Sync.	Disabled	Disabled or Enabled		N/A
Enables or disables the IRIG-B time synchronization.				
IRIG-B Status	Data	Card not fitted, Card failed, Signal healthy, No signal		N/A
Displays the status of IRIG-B.				
Battery Status	Dead, Healthy			
Displays whether the battery is healthy or not.				
Battery Alarm	Enabled	Disabled, Enabled		N/A
Enables or disables battery alarm. The battery alarm needs to be disabled when a battery is removed or not used.				
SNTP Status	Data	Disabled, Trying Server1, Trying Server 2, Server 1 OK, Server 2 OK, No response, No Valid Clock		N/A
Displays information about the SNTP time synchronization status				
LocalTime Enable	Fixed	Disabled, Fixed, Flexible		N/A
Setting to turn on/off local time adjustments. Disabled - No local time zone will be maintained. Time synchronization from any interface will be used to directly set the master clock and all displayed (or read) times on all interfaces will be based on the master clock with no adjustment. Fixed - A local time zone adjustment can be defined using the LocalTime offset setting and all interfaces will use local time except SNTP time synchronization and IEC61850 timestamps. Flexible - A local time zone adjustment can be defined using the LocalTime offset setting and each interface can be assigned to the UTC zone or local time zone with the exception of the local interfaces which will always be in the local time zone and IEC61850/SNTP which will always be in the UTC zone.				
LocalTime Offset	0 min	-720 min	720 min	1 min
Setting to specify an offset of -12 to +12 hrs in 15 minute intervals for local time zone. This adjustment is applied to the time based on the master clock which is UTC/GMT				
DST Enable	Enabled	Disabled or Enabled		N/A
Setting to turn on/off daylight saving time adjustment to local time.				
DST Offset	60 min	30 min	60 min	30 min
Setting to specify daylight saving offset which will be used for the time adjustment to local time.				
DST Start	Last	First, Second, Third, Fourth, Last		N/A
Setting to specify the week of the month in which daylight saving time adjustment starts				
DST Start Day	Sunday	Sunday, Monday, Tuesday, Wednesday, Thursday, Friday, Saturday		N/A

Menu text	Default setting	Setting range		Step size
		Min.	Max.	
DATE AND TIME				
Setting to specify the day of the week in which daylight saving time adjustment starts				
DST Start Month	March	January, February, March, April, May, June, July, August, September, November, December		N/A
Setting to specify the month in which daylight saving time adjustment starts				
DST Start Mins	60 min	0 min	1425 min	15 min
Setting to specify the time of day in which daylight saving time adjustment starts. This is set relative to 00:00 hrs on the selected day when time adjustment is to start.				
DST End	Last	First, Second, Third, Fourth, Last		N/A
Setting to specify the week of the month in which daylight saving time adjustment ends.				
DST End Day	Sunday	Sunday, Monday, Tuesday, Wednesday, Thursday, Friday, Saturday		N/A
Setting to specify the day of the week in which daylight saving time adjustment ends				
DST End Month	October	January, February, March, April, May, June, July, August, September, November, December		N/A
Setting to specify the month in which daylight saving time adjustment ends				
DST End Mins	60 min	0 min	1425 min	15 min
Setting to specify the time of day in which daylight saving time adjustment ends. This is set relative to 00:00 hrs on the selected day when time adjustment is to end.				
RP1 Time Zone	Local	UTC, Local		N/A
Setting for the rear port 1 interface to specify if time synchronization received will be local or universal time co-ordinated				
RP2 Time Zone	Local	UTC, Local		N/A
Setting for the rear port 2 interface to specify if time synchronization received will be local or universal time co-ordinated				
Tunnel Time Zone	Local	UTC, Local		N/A
Setting to specify if time synchronization received will be local or universal time co-ordinate when ‘tunneling’ courier protocol over Ethernet.				

Table 32 - Date and time menu

4.10 CT and VT Ratios

Menu text	Default setting	Setting range		Step size
		Min.	Max.	
CT AND VT RATIOS				
Main VT Primary	110.0 V	100	1000 kV	1
Main voltage transformer input, primary voltage setting.				
Main VT Sec'y	110.0 V	80	140	1
Main transformer input, secondary voltage setting.				
C/S VT Primary	110.0 V	100	1000 kV	1
Sets the check sync. voltage transformer input primary voltage (P341 60TE case version only).				
C/S VT Secondary	110.0 V	80	140	1
Sets the check sync. voltage transformer input secondary voltage (P341 60TE case version only).				
VN Primary	110.0 V	100	1000 kV	1
VN input, primary voltage setting. VN1 is the neutral voltage input.				
VN Secondary	110.0 V	80	140	1
VN input, secondary voltage setting.				
Ph CT Polarity	Standard	Standard, Inverted		
Phase CT polarity selection. This setting can be used to easily reverse the CT polarity for wiring errors.				
Phase CT Primary	1.000 A	1	60 k	1
Phase current transformer input, primary current rating setting.				
Phase CT Sec'y	1.000 A	1	5	4
Phase current transformer input, secondary current rating setting.				
Isen CT Polarity	Standard	Standard, Inverted		
Sensitive Current transformer polarity selection. This setting can be used to easily reverse the CT polarity for wiring errors.				
Isen CT Primary	1.000 A	1	60 k	1
Sensitive current transformer input, primary current rating setting.				
Isen CT Secondary	1.000 A	1	5	4
Sensitive current transformer input, secondary current rating setting.				

Table 33 - CT and VT ratio settings

4.11 Record Control

It is possible to disable the reporting of events from all interfaces that support setting changes. The settings that control the reporting of various types of events are in the Record Control column. The effect of setting each to disabled is as follows:

Menu text	Default setting	Available settings
RECORD CONTROL		
Clear Events	No	No, Yes
Selecting “Yes” will cause the existing event log to be cleared and an event will be generated indicating that the events have been erased.		
Clear Faults	No	No, Yes
Selecting “Yes” will cause the existing fault records to be erased from the relay.		
Clear Maint.	No	No, Yes
Selecting “Yes” will cause the existing maintenance records to be erased from the relay.		
Alarm Event	Enabled	Disabled, Enabled
Disabling this setting means that no event will be generated for all alarms.		
Relay O/P Event	Enabled	Disabled, Enabled
Disabling this setting means that no event will be generated for any change in relay output contact state.		
Opto Input Event	Enabled	Disabled, Enabled
Disabling this setting means that no event will be generated for any change in logic input state.		
General Event	Enabled	Disabled, Enabled
Disabling this setting means that no General Events will be generated. See the event record sheet in the Relay Menu Database document, *P34x/EN MD* for the list of general events.		
Fault Rec Event	Enabled	Disabled, Enabled
Disabling this setting means that no event will be generated for any fault that produces a fault record.		
Maint. Rec Event	Enabled	Disabled, Enabled
Disabling this setting means that no event will be generated for any maintenance records.		
Protection Event	Enabled	Disabled, Enabled
Disabling this setting means that no event will be generated for any operation of the protection elements.		
Clear Dist Recs	No	No, Yes
Selecting “Yes” will cause the existing disturbance records to be erased from the relay.		
DDB 31 - 0	11111111111111111111111111111111	
32 bit setting to enable or disable the event recording for DDBs 0-31. For each bit 1 = event recording Enabled, 0 = event recording Disabled.		
DDB 2047 - 2016	11111111111111111111111111111111	
32 bit setting to enable or disable the event recording for DDBs 2047 - 2016. For each bit 1 = event recording Enabled, 0 = event recording Disabled. There are similar cells showing 32 bit binary strings for all DDBs from 0 – 2047. The first and last 32 bit binary strings only are shown here.		

Table 34 - Record control menu

4.12 Disturbance Recorder Settings

The disturbance recorder settings include the record duration and trigger position, selection of analog and digital signals to record, and the signal sources that trigger the recording.

Menu text	Default setting	Setting range		Step size
		Min.	Max.	
DISTURB RECORDER				
Duration	1.5 s	0.1 s	10.5 s	0.01 s
Overall recording time setting.				
Trigger Position	33.3%	0	100%	0.1%
Trigger point setting as a percentage of the duration. For example, the default settings show that the overall recording time is set to 1.5 s with the trigger point being at 33.3% of this, giving 0.5 s pre-fault and 1 s post fault recording times.				
Trigger Mode	Single	Single, Extended		
If set to single mode and a further trigger occurs while a recording is taking place, the recorder will ignore the trigger. However, if this has been set to "Extended", the post trigger timer will be reset to zero, thereby extending the recording time.				
Analog. Channel 1	VA	Unused, VA, VB, VC, VN, IA, IB, IC, ISensitive, Frequency, C/S Voltage.		
Selects any available analog input to be assigned to this channel.				
Analog. Channel 2	VB	As above		
Analog. Channel 3	VC	As above		
Analog. Channel 4	VN	As above		
Analog. Channel 5	IA	As above		
Analog. Channel 6	IB	As above		
Analog. Channel 7	IC	As above		
Analog. Channel 8	I Sensitive	As above		
Digital Inputs 1 to 32	Relays 1 to 7 and Opto's 1 to 8	Any of 7 O/P Contacts or Any of 8 Opto Inputs or Internal Digital Signals		
The digital channels may be mapped to any of the opto isolated inputs or output contacts, in addition to a number of internal relay digital signals, such as protection starts, LEDs etc.				
Inputs 1 to 32 Trigger	No Trigger except Dedicated Trip Relay O/P's which are set to Trigger L/H	No Trigger, Trigger L/H, Trigger H/L		
Any of the digital channels may be selected to trigger the disturbance recorder on either a low to high (L/H) or a high to low (H/L) transition.				

Table 35 - Disturbance record settings

4.13 Measurement Setup

Menu text	Default settings	Available settings
MEASURE'T SETUP		
Default Display	Description	Description, Plant Reference, Frequency, Access Level, 3Ph + N Current, 3Ph Voltage, Power, Date and Time
This setting can be used to select the default display from a range of options, note that it is also possible to view the other default displays whilst at the default level using the and keys. However once the 15 minute timeout elapses the default display will revert to that selected by this setting.		
Local Values	Primary	Primary, Secondary
This setting controls whether measured values via the front panel user interface and the front courier port are displayed as primary or secondary quantities.		
Remote Values	Primary	Primary, Secondary
This setting controls whether measured values via the rear communication port are displayed as primary or secondary quantities.		
Measurement Ref.	VA	VA, VB, VC, IA, IB, IC
Using this setting the phase reference for all angular measurements by the relay can be selected.		
Measurement Mode	0	0 to 3 step 1
This setting is used to control the signing of the real and reactive power quantities; the signing convention used is defined in the Measurements and Recording chapter.		
Fix Dem Period	30 minutes	1 to 99 minutes step 1 minute
This setting defines the length of the fixed demand window.		
Roll Sub Period	30 minutes	1 to 99 minutes step 1 minute
The rolling demand uses a sliding/rolling window. The rolling demand window consists of a number of smaller sub periods (Num Sub Periods). The resolution of the rolling window is the sub period length (Roll Sub Period) with the displayed values being updated at the end of each sub period.		
Num Sub Periods	1	1 to 15 step 1
This setting is used to set the number of rolling demand sub periods.		
Remote 2 Values	Primary	Primary, Secondary
This setting controls whether measured values via the 2nd rear communication port are displayed as primary or secondary quantities.		

Table 36 - Measurement setup settings

4.14 Communications

The communications settings apply to the rear communications ports only and will depend upon the particular protocol being used. For further details see the SCADA Communications chapter.

4.14.1 Communication Settings for Courier Protocol

Menu text	Default setting	Setting range		Step size
		Min.	Max.	
COMMUNICATIONS				
RP1 Protocol	Courier			
Indicates the communications protocol that will be used on the rear communications port.				
RP1 Address	255	0	255	1
This cell sets the unique address for the relay such that only one relay is accessed by master station software.				
RP1 Inactiv Timer	15 mins.	1 mins.	30 mins.	1 min.
This cell controls how long the relay will wait without receiving any messages on the rear port before it reverts to its default state, including resetting any password access that was enabled.				
RP1 Physical Link	Copper	Copper, Fiber Optic, KBus		
This cell defines whether an electrical EIA(RS)485, fiber optic or KBus connection is being used for communication between the master station and relay. If 'Fiber Optic' is selected, the optional fiber optic communications board will be required.				
RP1 Card Status	RP1 Card Status			
Rear Port 1 Courier Protocol Status.				
RP1 Port Config.	KBus	KBus, EIA(RS)485		
This cell defines whether an electrical KBus or EIA(RS)485 is being used for communication between the master station and relay.				
RP1 Comms Mode	IEC 60870 FT1.2 Frame	IEC 60870 FT1.2 Frame, 10-Bit No Parity		
The choice is either IEC 60870 FT1.2 for normal operation with 11-bit modems, or 10-bit no parity.				
RP1 Baud Rate	19200 bits/s	9600 bits/s, 19200 bits/s, 38400 bits/s		
This cell controls the communication speed between relay and master station. It is important that both relay and master station are set at the same speed setting.				

Table 37 - Communication settings for courier protocol

4.14.2 Communication Settings for MODBUS Protocol

Menu text	Default setting	Setting range		Step size
		Min.	Max.	
COMMUNICATIONS				
RP1 Protocol	MODBUS			
Indicates the communications protocol that will be used on the rear communications port.				
RP1 Address	1	1	247	1
This cell sets the unique address for the relay such that only one relay is accessed by master station software.				
RP1 Inactiv Timer	15 mins.	1 mins.	30 mins.	1 min.
This cell controls how long the relay will wait without receiving any messages on the rear port before it reverts to its default state, including resetting any password access that was enabled.				
RP1 Baud Rate	19200 bits/s	9600 bits/s, 19200 bits/s, 38400 bits/s		
This cell controls the communication speed between relay and master station. It is important that both relay and master station are set at the same speed setting.				
RP1 Parity	None	Odd, Even, None		
This cell controls the parity format used in the data frames. It is important that both relay and master station are set with the same parity setting.				
RP1 Physical Link	Copper	Copper, Fiber Optic		
This cell defines whether an electrical EIA(RS) 485 or fiber optic connection is being used for communication between the master station and relay. If 'Fiber Optic' is selected, the optional fiber optic communications board will be required.				
MODBUS IEC Time	Standard IEC	Standard IEC, Reverse		
When 'Standard IEC' is selected the time format complies with IEC 60870-5-4 requirements such that byte 1 of the information is transmitted first, followed by bytes 2 through to 7. If 'Reverse' is selected the transmission of information is reversed.				

Table 38 - Communication settings for MODBUS protocol

4.14.3 Communication Settings for IEC 60870-5-103 Protocol

Menu text	Default setting	Setting range		Step size
		Min.	Max.	
COMMUNICATIONS				
RP1 Protocol	IEC60870-5-103			
Indicates the communications protocol that will be used on the rear communications port.				
RP1 Address	1	0	247	1
This cell sets the unique address for the relay such that only one relay is accessed by master station software.				
RP1 Inactiv Timer	15 mins.	1 mins.	30 mins.	1 min.
This cell controls how long the relay will wait without receiving any messages on the rear port before it reverts to its default state, including resetting any password access that was enabled.				
RP1 Baud Rate	19200 bits/s	9600 bits/s, 19200 bits/s		
This cell controls the communication speed between relay and master station. It is important that both relay and master station are set at the same speed setting.				
RP1 Measure't Period	15 s	1 s	60 s	1 s
This cell controls the time interval that the relay will use between sending measurement data to the master station.				
RP1 Physical Link	Copper	Copper, Fiber Optic		
This cell defines whether an electrical EIA(RS) 485 or fiber optic connection is being used for communication between the master station and relay. If 'Fiber Optic' is selected, the optional fiber optic communications board will be required.				
RP1 CS103 Blocking	Disabled	Disabled, Monitor Blocking, Command Blocking		

Menu text	Default setting	Setting range		Step size
		Min.	Max.	
COMMUNICATIONS				
There are three settings associated with this cell:				
Disabled	No blocking selected			
Monitor Blocking	When the monitor blocking DDB Signal is active high, either by energizing an opto input or control input, reading of the status information and disturbance records is not permitted. When in this mode the relay returns a “termination of general interrogation” message to the master station.			
Command Blocking	When the command blocking DDB signal is active high, either by energizing an opto input or control input, all remote commands will be ignored (i.e. CB Trip/Close, change setting group etc.). When in this mode the relay returns a “negative acknowledgement of command” message to the master station.			

Table 39 - Communication settings for IEC-103 protocol

4.14.4 Communication Settings for DNP3.0 Protocol

Menu text	Default setting	Setting range		Step size
		Min.	Max.	
COMMUNICATIONS				
RP1 Protocol	DNP 3.0			
Indicates the communications protocol that will be used on the rear communications port.				
RP1 Address	3	0	65519	1
This cell sets the unique address for the relay such that only one relay is accessed by master station software.				
RP1 Baud Rate	19200 bits/s	1200 bits/s, 2400 bits/s, 4800 bits/s, 9600 bits/s, 19200 bits/s or 38400 bits/s		
This cell controls the communication speed between relay and master station. It is important that both relay and master station are set at the same speed setting.				
RP1 Parity	None	Odd, Even, None		
This cell controls the parity format used in the data frames. It is important that both relay and master station are set with the same parity setting.				
RP1 Physical Link	Copper	Copper, Fiber Optic		
This cell defines whether an electrical EIA(RS) 485 or fiber optic connection is being used for communication between the master station and relay. If ‘Fiber Optic’ is selected, the optional fiber optic communications board will be required.				
RP1 Time Sync.	Disabled	Disabled, Enabled		
If set to ‘Enabled’ the DNP3.0 master station can be used to synchronize the time on the relay. If set to ‘Disabled’ either the internal free running clock, or IRIG-B input are used.				
DNP Need Time	10 mins.	1 mins.	30 mins	1 mins
The duration of time waited, before requesting another time sync from the master.				
DNP App Fragment	2048 bytes	100 bytes	2048 bytes	1 byte
The maximum message length (application fragment size) transmitted by the relay.				
DNP App Timeout	2 s	1 s	120 s	1 s
Duration of time waited, after sending a message fragment and awaiting a confirmation from the master.				
DNP SBO Timeout	10 s	1 s	10 s	1 s
Duration of time waited, after receiving a select command and awaiting an operate confirmation from the master.				
DNP Link Timeout	0 s	0 s	120 s	1 s
Duration of time that the relay will wait for a Data Link Confirm from the master. A value of 0 means data link support disabled and 1 to 120 seconds is the timeout setting.				

Table 40 - Communication settings for DNP3.0 protocol

4.14.5 Communication Settings for Ethernet Port

Menu text	Default setting	Setting range		Step size
		Min.	Max.	
NIC Protocol	IEC 61850			
Indicates that IEC 61850 will be used on the rear Ethernet port.				
NIC MAC Address	Ethernet MAC Address			
Indicates the MAC address of the rear Ethernet port.				
NIC Tunl Timeout	5 mins	1 min	30 mins	1 min
Duration of time waited before an inactive tunnel to S1 Studio is reset.				
NIC Link Report	Alarm	Alarm, Event, None		
Configures how a failed/unfitted network link (copper or fiber) is reported: Alarm - an alarm is raised for a failed link Event - an event is logged for a failed link None - nothing reported for a failed link				
NIC Link Timeout	60 s	0.1 s	60 s	0.1 s
Duration of time waited, after failed network link is detected, before communication by the alternative communications interface (fiber optic/copper interface) is attempted. See also the IED CONFIGURATOR column for IEC 61850 data.				

Table 41 - Ethernet port communication settings

4.14.6 Rear Port 2 Connection Settings

The settings shown are those configurable for the second rear port which is only available with the courier protocol.

Menu text	Default setting	Setting range		Step size
		Min.	Max.	
COMMUNICATIONS				
RP2 Protocol	Courier			
Indicates the communications protocol that will be used on the 2nd rear communications port.				
RP2 Card Status	K-Bus OK, RS485 OK, Fiber Optic OK			
Rear Port 2 Courier Protocol Status.				
RP2 Port Config.	RS232	EIA(RS)232, EIA(RS)485, KBus		
This cell defines whether an electrical EIA(RS)232, EIA(RS)485 or KBus is being used for communication.				
RP2 Comms. Mode	IEC 60870 FT1.2 Frame	IEC60870 FT1.2 Frame, 10-Bit No Parity		
The choice is either IEC60870 FT1.2 for normal operation with 11-bit modems, or 10-bit no parity.				
RP2 Address	255	0	255	1
This cell sets the unique address for the relay such that only one relay is accessed by master station software.				
RP2 Inactiv Timer	15 mins.	1 mins.	30 mins.	1 min.
This cell controls how long the relay will wait without receiving any messages on the rear port before it reverts to its default state, including resetting any password access that was enabled.				
RP2 Baud Rate	19200 bits/s	9600 bits/s, 19200 bits/s, 38400 bits/s		

Menu text	Default setting	Setting range		Step size
		Min.	Max.	
COMMUNICATIONS				
This cell controls the communication speed between relay and master station. It is important that both relay and master station are set at the same speed setting.				

Table 42 - Rear port connection settings

4.15 Commissioning Tests

There are menu cells which allow the status of the opto-isolated inputs, output relay contacts, internal digital data bus (DDB) signals and user-programmable LEDs to be monitored. Also, there are cells to test the operation of the output contacts and user-programmable LEDs.

Menu text	Default setting	Available settings
COMMISSION TESTS		
Opto I/P Status	0000000000000000	
This menu cell displays the status of the relay's opto-isolated inputs as a binary string, a '1' indicating an energized opto-isolated input and a '0' a de-energized one.		
Relay O/P Status	0000000000000000	
This menu cell displays the status of the relay's output contacts as a binary string, a '1' indicating an operated state and '0' a non-operated state. When the 'Test Mode' cell is set to 'Enabled' the 'Relay O/P Status' cell does not show the current status of the output relays and hence can not be used to confirm operation of the output relays. Therefore it will be necessary to monitor the state of each contact in turn.		
Test Port Status	00000000	
This menu cell displays the status of the eight digital data bus (DDB) signals that have been allocated in the 'Monitor Bit' cells.		
Monitor Bit 1	64 (LED 1)	0 to 2047 See PSL chapter for details of digital data bus signals
The eight 'Monitor Bit' cells allow the user to select the status of which digital data bus signals can be observed in the 'Test Port Status' cell or via the monitor/download port.		
Monitor Bit 8	71 (LED 8)	0 to 2047
The eight 'Monitor Bit' cells allow the user to select the status of which digital data bus signals can be observed in the 'Test Port Status' cell or via the monitor/download port.		
Test Mode	Disabled	Disabled, Test Mode, Contacts Blocked
The Test Mode menu cell is used to allow secondary injection testing to be performed on the relay without operation of the trip contacts. It also enables a facility to directly test the output contacts by applying menu controlled test signals. To select test mode the Test Mode menu cell should be set to 'Test Mode', which takes the relay out of service and blocks the maintenance, counters. It also causes an alarm condition to be recorded and the yellow 'Out of Service' LED to illuminate and an alarm message 'Prot'n. Disabled' is given. This also freezes any information stored in the CB Condition column and in IEC60870-5-103 builds changes the Cause of Transmission, COT, to Test Mode. To enable testing of output contacts the Test Mode cell should be set to Contacts Blocked. This blocks the protection from operating the contacts and enables the test pattern and contact test functions which can be used to manually operate the output contacts. Once testing is complete the cell must be set back to 'Disabled' to restore the relay back to service.		
Test Pattern	00000000000000000000000000000000	0 = Not Operated 1 = Operated
This cell is used to select the output relay contacts that will be tested when the 'Contact Test' cell is set to 'Apply Test'.		
Contact Test	No Operation	No Operation, Apply Test, Remove Test
When the 'Apply Test' command in this cell is issued the contacts set for operation (set to '1') in the 'Test Pattern' cell change state. After the test has been applied the command text on the LCD will change to 'No Operation' and the contacts will remain in the Test State until reset issuing the 'Remove Test' command. The command text on the LCD will again revert to 'No Operation' after the 'Remove Test' command has been issued. *Note: When the 'Test Mode' cell is set to 'Enabled' the 'Relay O/P Status' cell does not show the current status of the output relays and hence can not be used to confirm operation of the output relays. Therefore it will be necessary to monitor the state of each contact in turn.*		
Test LEDs	No Operation	No Operation Apply Test
When the 'Apply Test' command in this cell is issued the 8 user-programmable LEDs will illuminate for approximately 2 seconds before they extinguish and the command text on the LCD reverts to 'No Operation'.		

Menu text	Default setting	Available settings
COMMISSION TESTS		
DDB 31 - 0	00000000000000000000001000000000	
Displays the status of DDB signals 0-31.		
DDB 2047 - 2016	00000000000000000000000000000000	
Displays the status of DDB signals 2047 – 2016. There are similar cells showing 32 bit binary strings for all DDBs from 0 – 2047. The first and last 32 bit words only are shown here.		

Table 43 - Commissioning tests menu cells

4.16 Circuit Breaker Condition Monitor Setup

The Circuit Breaker condition monitoring includes features to monitor the CB condition such as the current broken, number of CB operations, number of CB operations in a set time and CB operating time. Alarms or a circuit breaker lockout can be raised for different threshold values.

Menu text	Default setting	Setting range		Step size
		Min.	Max.	
CB MONITOR SETUP				
Broken I^	2	1	2	0.1
This sets the factor to be used for the cumulative I^ counter calculation that monitors the cumulative severity of the duty placed on the interrupter. This factor is set according to the type of Circuit Breaker used.				
I^ Maintenance	Alarm Disabled	Alarm Disabled, Alarm Enabled		
Enables or disables the cumulative I^ maintenance alarm element.				
I^ Maintenance	1000 In^	1 In^	25000 In^	1 In^
Threshold setting for the cumulative I^ maintenance counter. This alarm indicates when preventative maintenance is due.				
I^ Lockout	Alarm Disabled	Alarm Disabled, Alarm Enabled		
Enables or disables the cumulative I^lockout element.				
I^ Lockout	2000 In^	1 In^	25000 In^	1 In^
Threshold setting for the cumulative I^ lockout counter. The relay can be used to lockout the CB reclosing if maintenance is not carried out on reaching this lockout threshold.				
No CB Ops Maint.	Alarm Disabled	Alarm Disabled, Alarm Enabled		
Number of circuit breaker operations setting for the maintenance alarm.				
No CB Ops Maint.	10	1	10000	1
Threshold setting for number of circuit breaker operations for the maintenance alarm. This alarm indicates when preventative maintenance is due.				
No CB Ops Lock	Alarm Disabled	Alarm Disabled, Alarm Enabled		
Enables or disables the number of circuit breaker operations lockout alarm.				
No CB Ops Lock	20	1	10000	1
Threshold setting for number of circuit breaker operations for maintenance lockout. This lockout alarm can be used to block or lockout the CB reclosing if maintenance is not carried out on reaching this lockout threshold.				
CB Time Maint	Alarm Disabled	Alarm Disabled, Alarm Enabled		
Enables or disables the circuit breaker operating time maintenance alarm.				
CB Time Maint	0.1 s	0.005 s	0.5 s	0.001 s
Circuit breaker operating time threshold setting. This alarm is set in relation to the specified interrupting time of the circuit breaker.				
CB Time Lockout	Alarm Disabled	Alarm Disabled, Alarm Enabled		
Enables or disables the circuit breaker operating time lockout alarm.				
CB Time Lockout	0.2 s	0.005 s	0.5 s	0.001 s
Circuit breaker operating time threshold setting. This lockout alarm is set in relation to the specified interrupting time of the circuit breaker.				
Fault Freq Lock	Alarm Disabled	Alarm Disabled, Alarm Enabled		
Enables or disables the fault frequency counter alarm.				
Fault Freq Count	10	1	9999	1
Circuit breaker frequent operations counter setting. This element monitors the number of operations over a set time period.				
Fault Freq. Time	3600 s	0	9999 s	1 s

Menu text	Default setting	Setting range		Step size
		Min.	Max.	
CB MONITOR SETUP				
Time period setting over which the circuit breaker frequent operations are to be monitored.				

Table 44 - Circuit breaker condition monitoring menu

4.17 Opto Configuration

Menu text	Default setting	Setting range		Step size
		Min.	Max.	
OPTO CONFIG.				
Global Nominal V	24 - 27	24 - 27, 30 - 34, 48 - 54, 110 - 125, 220 - 250, Custom		
Sets the nominal battery voltage for all opto inputs by selecting one of the five standard ratings in the Global Nominal V settings. If Custom is selected then each opto input can individually be set to a nominal voltage value.				
Opto Input 1	24 - 27	24 - 27, 30 - 34, 48 - 54, 110 - 125, 220 - 250		
Each opto input can individually be set to a nominal voltage value if custom is selected for the global setting.				
Opto Input 2 - 24	24 - 27	24 - 27, 30 - 34, 48 - 54, 110 - 125, 220 - 250		
Each opto input can individually be set to a nominal voltage value if custom is selected for the global setting.				
Opto Filter Cntl.	1111111111111111	0 = Disable Filtering 1 = Enable filtering		
A binary string is used to represent the opto inputs available. A ‘1’ or ‘0’ is used to enable or disable for each input a pre-set filter of ½ cycle that renders the input immune to induced ac noise on the wiring.				
Characteristics	Standard 60% - 80%	Standard 60% - 80%, 50% - 70%		
Selects the pick-up and drop-off characteristics of the optos. Selecting the standard setting means they nominally provide a Logic 1 or On value for Voltages ≥80% of the set lower nominal voltage and a Logic 0 or Off value for the voltages ≤60% of the set higher nominal voltage.				

Table 45 - Opto inputs configuration settings

4.18 Control Inputs

The control inputs function as software switches that can be set or reset either locally or remotely. These inputs can be used to trigger any function that they are connected to as part of the PSL.

Menu text	Default setting	Setting range	Step size
CONTROL INPUTS			
Ctrl I/P Status	00000000000000000000000000000000	0 = Reset (Not Operated/OFF) 1 = Set (Operated/ON)	
This menu cell displays the status of the relay’s control inputs as a binary string, a ‘1’ indicating an Set control input and a ‘0’ a Reset one.			
Control Input 1 to 32	No Operation	No Operation, Set, Reset	
When the ‘Set’ command in this cell is issued the Control Input 1 is set ON and when the ‘Reset’ command in this cell is issued the Control Input 1 is set OFF.			

Table 46 - Control inputs settings

4.19 Control Input Configuration

The control inputs function as software switches that can be set or reset either locally or remotely. These inputs can be used to trigger any function that they are connected to as part of the PSL.

Menu text	Default setting	Setting range	Step size
CTRL I/P CONFIG.			
Hotkey Enabled	11111111111111111111111111111111		
Setting to allow the control inputs to be individually assigned to the “Hotkey” menu by setting ‘1’ in the appropriate bit in the “Hotkey Enabled” cell. The hotkey menu allows the control inputs to be set, reset or pulsed without the need to enter the “CONTROL INPUTS” column.			
Control Input 1	Latched	Latched, Pulsed	
Configures the control inputs as either ‘latched’ or ‘pulsed’. A latched control input will remain in the set state until a reset command is given, either by the menu or the serial communications. A pulsed control input, however, will remain energized for 10 ms after the set command is given and will then reset automatically (i.e. no reset command required).			
Ctrl Command 1	Set/Reset	Set/Reset, In/Out, Enabled/Disabled, On/Off	
Allows the SET / RESET text, displayed in the hotkey menu, to be changed to something more suitable for the application of an individual control input, such as “ON / OFF”, “IN / OUT”, “ENABLED / DISABLED”.			
Control Input 2 to 32	Latched	Latched, Pulsed	
Configures the control inputs as either ‘latched’ or ‘pulsed’.			
Ctrl Command 2 to 32	Set/Reset	Set/Reset, In/Out, Enabled/Disabled, On/Off	
Allows the SET / RESET text, displayed in the hotkey menu, to be changed to something more suitable for the application of an individual control input, such as “ON / OFF”, “IN / OUT”, “ENABLED / DISABLED”.			

Table 47 - Control inputs configuration settings

4.20 Control Input Labels

Menu text	Default setting	Setting range	Step size
CTRL I/P LABELS			
Control Input 1	Control Input 1	16 Character Text	
Text label to describe each individual control input. This text will be displayed when a control input is accessed by the hotkey menu and it is displayed in the programmable scheme logic description of the control input.			
Control Input 2 to 32	Control Input 2 to 32	16 Character Text	
Text label to describe each individual control input. This text will be displayed when a control input is accessed by the hotkey menu and it is displayed in the programmable scheme logic description of the control input.			

Table 48 - Control input label settings

4.21 IED Configurator (for IEC 61850 Configuration)

The contents of the IED CONFIGURATOR column are mostly data cells, displayed for information but not editable. In order to edit the configuration, it is necessary to use the IED Configurator tool within S1 Studio.

Menu text	Default setting	Setting range		Step size
		Min.	Max.	
IED CONFIGURATOR				
Switch Conf.Bank	No Action	No Action, Switch Banks		
Setting which allows the user to switch between the current configuration, held in the Active Memory Bank (and partly displayed below), to the configuration sent to and held in the Inactive Memory Bank.				
Restore MCL	No Action	No Action, Restore MCL		
Setting which allows the user to reset any changes and restores the MCL stored in the relay.				
Active Conf.Name	Data			
The name of the configuration in the Active Memory Bank, usually taken from the SCL file.				
Active Conf.Rev	Data			
Configuration Revision number of the configuration in the Active Memory Bank, usually taken from the SCL file.				
Inact.Conf.Name	Data			
The name of the configuration in the Inactive Memory Bank, usually taken from the SCL file.				
Inact.Conf.Rev	Data			
Configuration Revision number of the configuration in the Inactive Memory Bank, usually taken from the SCL file.				
IP PARAMETERS				
IP Address	Data			
Displays the unique network IP address that identifies the relay.				
Subnet Mask	Data			
Displays the sub-network that the relay is connected to.				
Gateway	Data			
Displays the IP address of the gateway (proxy) that the relay is connected to, if any.				
SNTP PARAMETERS				
SNTP Server 1	Data			
Displays the IP address of the primary SNTP server.				
SNTP Server 2	Data			
Displays the IP address of the secondary SNTP server.				
IEC 61850 SCL				
IED Name	Data			
8 character IED name, which is the unique name on the IEC 61850 network for the IED, usually taken from the SCL file.				
IEC 61850 GOOSE				
GoEna	00000000	0 = Disabled, 1 = Enabled		
Setting to enable GOOSE settings, GOOSE configuration blocks (GCB) 1 to 8.				
Test Mode	00000000			
The Test Mode bit sets the test flag in the outgoing (published) Goose message. Each bit corresponds to one of the eight GOCBs in the same way that the GOEna bits enable or disable the corresponding Goose message. Clearing the test mode bit clears the test flag of the published Goose message. The data in the Goose message is unaffected.				
VOP Test Pattern	0x00000000	0x00000000	0xFFFFFFFF	1
The 32-bit test pattern applied in 'Forced' test mode.				
Ignore Test Flag	No	No, Yes		

Menu text	Default setting	Setting range		Step size
		Min.	Max.	
IED CONFIGURATOR				
When set to 'Yes', the test flag in the subscribed GOOSE message is ignored, and the data treated as normal.				

Table 49 - IEC-61850 IED configurator

OPERATION

CHAPTER 5

Date:	February 2012
Hardware Suffix:	J (P341)
Software Version:	36 and 71 (with DLR)
Connection Diagrams:	10P341xx (xx = 01 to 12)

CONTENTS

Page (OP) 5-

FIGURES

TABLES

1 OPERATION OF INDIVIDUAL PROTECTION FUNCTIONS

These sections detail the individual protection functions.

1.1 Phase Rotation

A facility is provided in the P341 to maintain correct operation of all the protection functions even when the generator is running in a reverse phase sequence. This is achieved through user configurable settings available for the four setting groups.

The **Phase Sequence** – **Standard ABC/Reverse ACB** setting applies to a power system that has a permanent phase sequence of either ABC or ACB. It is also applicable for temporary phase reversal which affects all the VTs and CTs. As distinct from the other phase reversal settings, this setting does not perform any internal phase swapping of the analogue channels.

The Phase Sequence setting affects the sequence component calculations as follows:

Standard ABC

The calculations of positive (I1, V1) and negative (I2, V2) phase sequence voltage and current remain unchanged as follows :

$$\overline{X_1} = \frac{1}{3}\left(\overline{X_a} + \alpha\overline{X_b} + \alpha^2\overline{X_c}\right)$$

$$\overline{X_2} = \frac{1}{3}\left(\overline{X_a} + \alpha^2\overline{X_b} + \alpha\overline{X_c}\right)$$

Reverse ACB

The calculations of positive (I1, V1) and negative (I2, V2) phase sequence voltage and current are given by the equations :

$$\overline{X_1} = \frac{1}{3}\left(\overline{X_a} + \alpha^2\overline{X_b} + \alpha\overline{X_c}\right)$$

$$\overline{X_2} = \frac{1}{3}\left(\overline{X_a} + \alpha\overline{X_b} + \alpha^2\overline{X_c}\right)$$

Where

$$\alpha = 1\angle 120^\circ$$

The Phase Sequence setting also affects the directional overcurrent protection as per Table 1:

Phase rotation	67 (Directional overcurrent)
Standard ABC	Phase A use Ia, Vbc Phase B use Ib, Vca Phase C use Ic, Vab
Reverse ACB	Phase A use Ia, -Vbc Phase B use Ib, -Vca Phase C use Ic, -Vab

Table 1 - Functional overview

The **VT Reversal**, **CT1 Reversal** and **CT2 Reversal** – **No Swap/ A-B Swapped/ B-C Swapped/ C-A Swapped** settings apply to applications where some or all of the voltage or current inputs are temporarily reversed, as in pump storage applications. The settings affect the order of the analogue channels in the relay and are set to emulate the order of the channels on the power system. So, assuming the settings emulate the change in phase configuration on the power system all the protection functions will naturally operate as per a standard phase rotation system. The phase sequence calculations and the protection functions all remain unchanged.

1.2 Rate of Change of Frequency Protection (81R)

The df/dt function can be used to isolate an embedded generator connected to the utility's supply system under 'loss of mains' condition or for load shedding applications. An increase or decrease of the system frequency (df/ft) will be directly related to a sudden change of load on the generator. 4 stages of df/dt protection are included in P34x. The first stage, df/dt>1 is designed for loss of grid applications but can also be used for load shedding. For the first stage only, the user can select a deadband around the nominal frequency, within which this element is blocked. The dead band is defined with high and low frequency settings **df/dt>1 f Low** and **df/dt> f High**. The deadband is eliminated if the high and low frequencies are set the same or the **df/dt> f L/H** setting is set to **Disabled**. The deadband provides additional stability for non loss of grid disturbances which do not affect the machine frequency significantly. Each stage has a direction setting **df/dt>n Dir'n – Negative**, **Positive**, **Both**. This setting determines whether the element will react to rising or falling frequency conditions respectively, with an incorrect setting being indicated if the threshold is set to zero. For loss of mains applications the **df/dt>1 Dir'n** should be set to **Both** to match the previous P341 algorithm.

There are some global df/dt settings that affect all protection stages that can be used to smooth out the frequency measurements and provide stable operation of the protection, **df/dt avg cycles** and **df/dt iterations**. These settings enable the user to select the number of cycles the frequency is averaged over and the number of iterations of the averaged cycles before a start is given. Two **Operating Mode** settings are provided: **Fixed Window** and **Rolling Window** which are described below in detail. The **Fixed Window** setting is provided for compatibility with the previous P341 df/dt function which used two consecutive calculations of a 3 cycle fixed window to initiate a start.

The previous software version P341 df/dt element calculated the rate of change of frequency every 3 cycles by calculating the frequency difference over the 3-cycle period as shown below.

$$df/dt = \frac{f_n - f_{n-3cycle}}{3cycle}$$

Two consecutive calculations must give a result above the setting threshold before a trip decision can be initiated.

The df/dt feature is available only when the **df/dt** option is enabled in the **CONFIGURATION** menu. All the stages may be enabled/disabled by the **df/dt>n Status** cell depending on which element is selected.

1.2.1 Fixed Window

The df/dt calculation is based upon a user definable fixed window, 2 to 12 cycles. A new value of df/dt is (re)calculated every window. Increasing the window size improves measurement accuracy but has the disadvantage of increasing the measurement calculation time.

The elapsed time between start and end frequency measurements is calculated by summing up all sample interval times (NSamp) within the df/dt window (2 to 12 cycles).

Fault detection delay time (cycles) = df/dt Iterations x df/dt Avg Cycles.

1.2.2 Rolling Window

The df/dt calculation is based upon a user definable rolling window, 2 to 12 cycles. The window is a rolling buffer, so a new value of df/dt is (re)calculated every protection cycle execution. Increasing the window size improves measurement accuracy but has the disadvantage of increasing the measurement calculation time.

To help improve the accuracy of the df/dt measurement, the value of df/dt calculated is averaged; the length of the averaging buffer is the window size.

The elapsed time between start and end frequency measurements is calculated by summing up all sample interval times (NSamp) within the df/dt window (2 to 12 cycles).

P341 fault detection delay time (cycles) = df/dt Avg Cycles + (df/dt Iterations-1) x 1/4). Protection scheduler runs every 1/2 cycle.

1.2.3 Logic Diagram

DDB signals are available to indicate starting and tripping of the df/dt element (Start: DDB 1184 -1187 Trip: DDB 928 - 931). The state of the DDB signals can be programmed to be viewed in the **Monitor Bit x** cells of the **COMMISSION TESTS** column in the relay.

The df/dt start is mapped internally to the ANY START DDB signal – DDB 992.

The logic diagrams for the df/dt logic are as shown in Figure 1 and Figure 2.

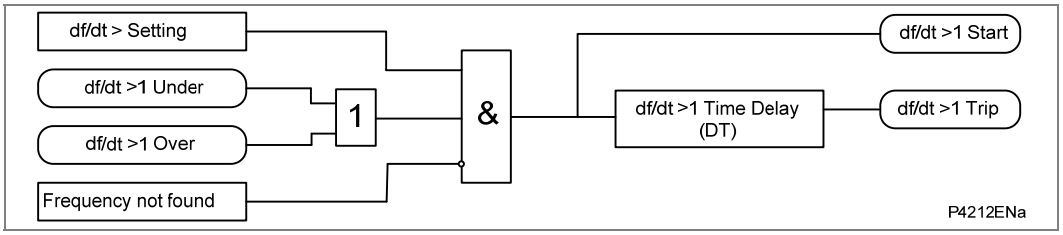

Figure 1 - Rate of change of frequency logic diagram for df/dt>1

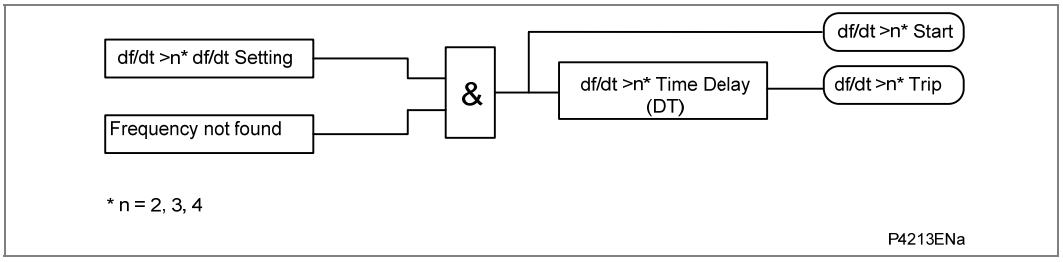

Figure 2 - Rate of change of frequency logic diagram for df/dt>2, 3, 4

1.3 Voltage Vector Shift Protection (ΔVθ)

The P341 has a single stage Voltage Vector Shift protection element. This element measures the change in voltage angle over successive power system half-cycles. The element operates by measuring the time between zero crossings on the voltage waveforms. A measurement is taken every half cycle for each phase voltage. Over a power system cycle this produces 6 results, a trip is issued if 5 of the 6 calculations for the last power system cycle are above the set threshold. Checking all three phases makes the element less susceptible to incorrect operation due to harmonic distortion or interference in the measured voltage waveform.

A DDB (Digital Data Bus) signal is available to indicate that the element has operated (DDB 933 V Shift Trip). The state of the DDB signal can also be programmed to be viewed in the **Monitor Bit x** cells of the **COMMISSION TESTS** column in the relay.

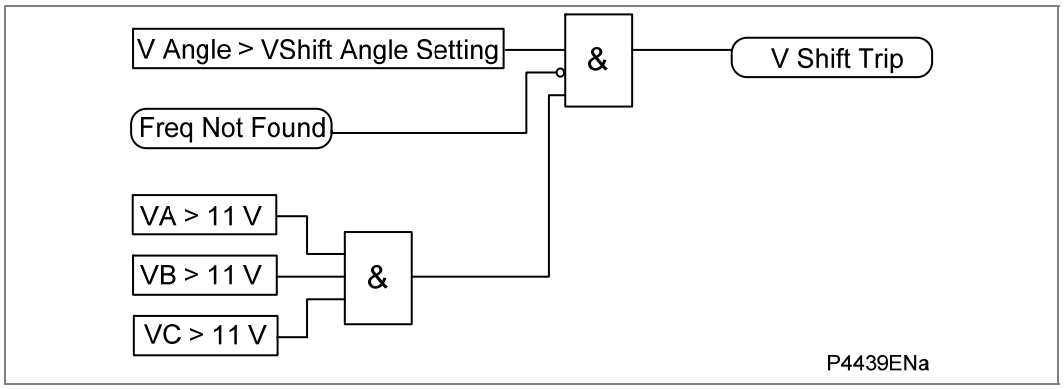

Figure 3 - Voltage vector shift logic diagram

1.4 Reconnection Timer (79)

Disconnection of an embedded generator could lead to a simple loss of revenue. Or in cases where the licensing arrangement demands export of power at times of peak load may lead to penalty charges being imposed. To minimize the disruption caused, the P341 includes a reconnection timer. This timer is initiated following operation of any protection element that could operate due to a loss of mains event, i.e. df/dt, voltage vector shift, under/over frequency, power and under/over voltage. The timer is blocked should a short circuit fault protection element operate, i.e. residual overvoltage, overcurrent, and earth fault. Once the timer delay has expired the element will provide a pulsed output signal. This signal can be used to initiate external synchronizing equipment that can re-synchronies the machine with the system and reclose the CB.

A DDB (Digital Data Bus) signal is available to indicate that the element has operated (DDB 1299 Reconnection). The state of the DDB signal can also be programmed to be viewed in the **Monitor Bit x** cells of the **COMMISSION TESTS** column in the relay.

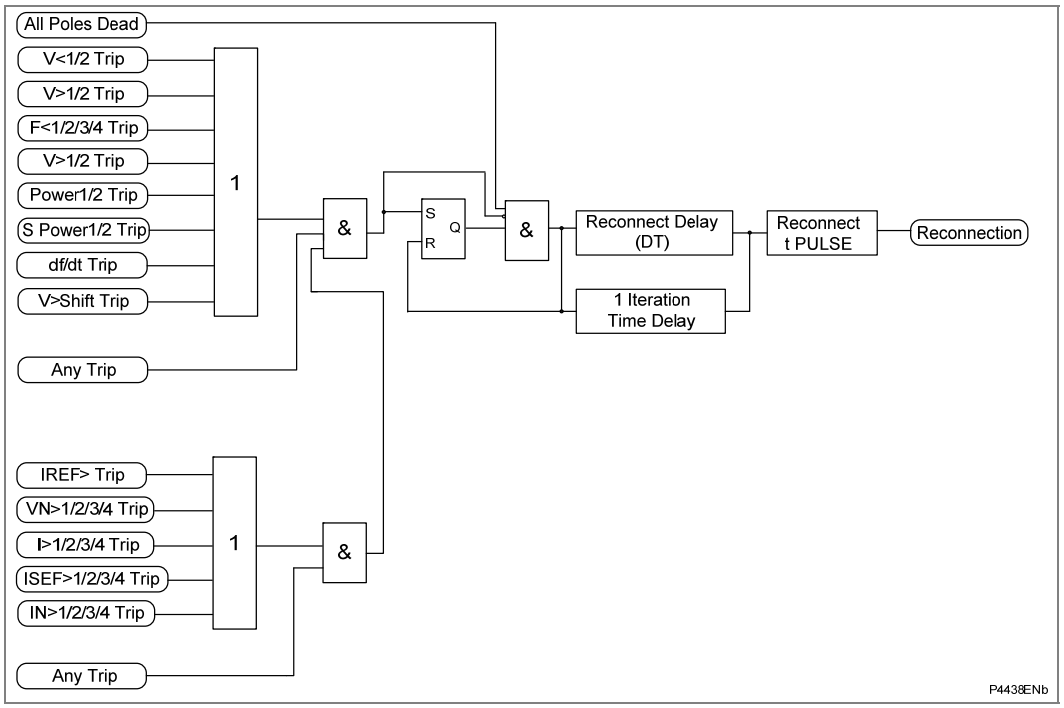

Figure 4 - Reconnect delay logic diagram

1.5 Reverse Power/Over Power/Low Forward Power (32R/32O/32L)

The standard power protection elements of the P34x relay calculate the three-phase active power based on the following formula, using the current measured at the Ia, Ib, Ic inputs on the relay.

$$P = Vala \cos\phi a + Vblb \cos\phi b + Vclc \cos\phi c$$

Two stages of power protection are provided, these can be independently selected as either reverse power, over power, low forward power or disabled, and operation in each mode is described in the following sections. The power elements may be selectively disabled, via fixed logic, so that they can be inhibited when the protected machines CB is open, this will prevent mal-operation and nuisance flagging of any stage selected to operate as low forward power.

The P341 relay is connected with the convention that the forward current is the current flowing from the generator to the busbar. This corresponds to positive values of the active power flowing in the forward direction. When a generator is operating in the motoring mode, the machine is consuming active power from the power system.

The motoring active power therefore flows in the reverse direction. The **Operating Mode** setting for the power protection allows the user to set the operating mode to either **Generating** or **Motoring**. If the mode is set to **Motoring**, the polarity of the calculated active power is inverted. The operating mode setting can be useful in applications involving pumped storage generators.

The two stages of power protection in the P34x relay are provided with a timer hold (drop off timer) facility, which may either be set to zero or to a definite time value. Setting of the timer to zero means that the power timer for that stage will reset instantaneously once the current falls below 95% of the power setting. Setting of the hold timer to a value other than zero, delays the resetting of the protection element timers for this period. For an intermittent fault when the reset time (drop-off time) of the power protection is instantaneous, the relay will be repeatedly reset and not be able to trip until the fault becomes permanent. By using the Timer Hold facility the relay will integrate the fault power pulses, thereby reducing fault clearance times. The timer hold (drop off timer) facility can be found for the two power stages as settings **Power 1 DO Timer** and **Power 2 DO Timer** respectively

DDB signals are available to indicate starting and tripping of each stage (Starts: DDB 1140, DDB 1141, Trips: DDB 882, 883). The state of the DDB signals can be programmed to be viewed in the **Monitor Bit x** cells of the **COMMISSION TESTS** column in the relay.

The power starts are mapped internally to the ANY START DDB signal – DDB 992.

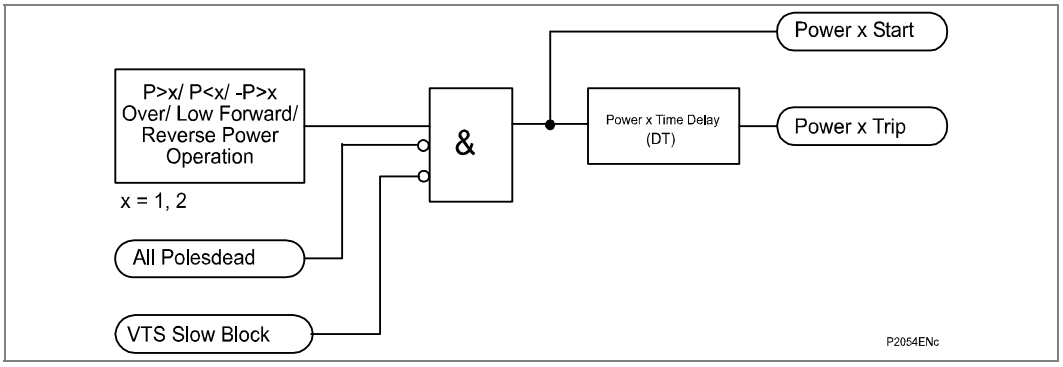

Figure 5 - Power logic diagram

1.5.1 Sensitive Power Protection Function

For steam turbine generators and some hydro generators a reverse power setting as low as 0.5%Pn is required. A sensitive setting for low forward power protection may also be required, especially for steam turbine generators that which have relatively low over speed design limits.

To improve the power protection accuracy, a dedicated CT input can be used connected to a metering class CT. The CT input is the same as that of the sensitive earth fault and restricted earth fault protection elements, so the user can only select either sensitive power or SEF/REF in the **Configuration** menu, but not both.

The sensitive power protection measures only A-phase active power, as the abnormal power condition is a three-phase phenomenon. Having a separate CT input also means that a correctly loaded metering class CT can be used which can provide the required angular accuracy for the sensitive power protection function. A compensation angle setting θC is also be provided to compensate for the angle error introduced by the system CT and VT.

The A-phase power is calculated based on the following formula:

$$PA = IA\ VA \cos(\phi - \theta C)$$

Where ϕ is the angle of IA with respect to VA and θC is the compensation angle setting.

Therefore, rated single-phase power, Pn, for a 1 A rated CT and 110 V rated VT is

$$Pn = In \times Vn = 1 \times 110/\sqrt{3} = 63.5\ W$$

The minimum setting is 0.3 W = 0.47% Pn

Two stages of sensitive power protection are provided, these can be independently selected as either reverse power, over power, low forward power or disabled, and operation in each mode is described in the following sections.

The power elements may be selectively disabled, via fixed logic, so that they can be inhibited when the protected machine's CB is open, this will prevent mal-operation and nuisance flagging of any stage selected to operate as low forward power.

The P34x relay is connected with the convention that the forward current is the current flowing from the generator to the busbar. This corresponds to positive values of the active power flowing in the forward direction. When a generator is operating in the motoring mode, the machine is consuming active power from the power system. The motoring active power therefore flows in the reverse direction. The **Operating Mode** setting for the sensitive power protection allows the user to set the operating mode to either **Generating** or **Motoring**. If the mode is set to **Motoring**, the polarity of the calculated active power is inverted. The operating mode setting can be useful in applications involving pumped storage generators.

The two stages of sensitive power protection in the P34x relay are provided with a timer hold (drop off timer) facility, which may either be set to zero or to a definite time value. Setting of the timer to zero means that the power timer for that stage will reset instantaneously once the current falls below 90% of the power setting. Setting of the hold timer to a value other than zero, delays the resetting of the protection element timers for this period. For an intermittent fault when the reset time (drop-off time) of the sensitive power protection is instantaneous, the relay will be repeatedly reset and not be able to trip until the fault becomes permanent. By using the Timer Hold facility the relay will integrate the fault power pulses, thereby reducing fault clearance times.

The timer hold (drop off timer) facility can be found for the two sensitive power stages as settings Power 1 DO Timer and Power 2 DO Timer respectively.

Measurement displays of A Phase sensitive active power, reactive power and power factor angle **APh Sen Watts**, **Aph Sen Vars** and **APh Power Angle** are provided in the **MEASUREMENTS 3** menu to aid testing and commissioning.

DDB signals are available to indicate starting and tripping of each stage (Starts: DDB **1142**, DDB 1143, Trips: DDB 884, 885). The state of the DDB signals can be programmed to be viewed in the **Monitor Bit x** cells of the **COMMISSION TESTS** column in the relay.

The sensitive power starts are mapped internally to the ANY START DDB signal – DDB **992**.

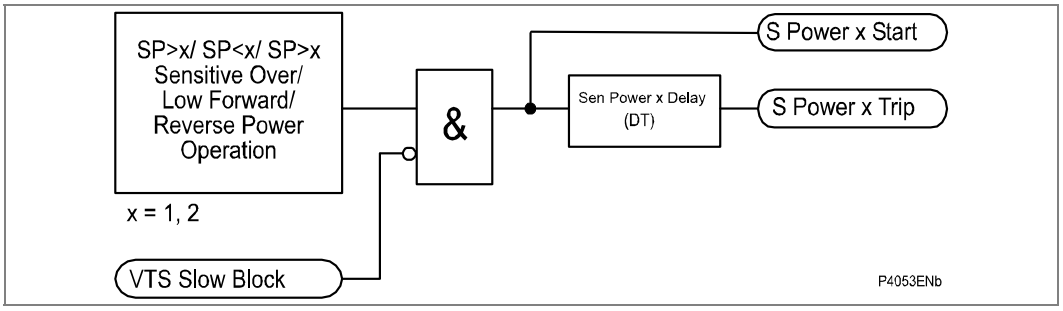

Figure 6 - Sensitive power logic diagram

1.6 Overcurrent Protection (50/51)

The overcurrent protection included in the P341 relays provides four-stage non-directional/ directional three-phase overcurrent protection with independent time delay characteristics. All overcurrent and directional settings apply to all three phases but are independent for each of the four stages.

The first two stages of overcurrent protection have time-delayed characteristics which are selectable between Inverse Definite Minimum Time (IDMT), or Definite Time (DT). The third and fourth stages have definite time characteristics only.

Various methods are available to achieve correct relay co-ordination on a system; by means of time alone, current alone or a combination of both time and current. Grading by means of current is only possible where there is an appreciable difference in fault level between the two relay locations. Grading by time is used by some utilities but can often lead to excessive fault clearance times at or near source substations where the fault level is highest. For these reasons the most commonly applied characteristic in coordinating overcurrent relays is the IDMT type.

The inverse time delayed characteristics indicated above, comply with the following formula:

IEC curves

$$t = T \times \left(\frac{\beta}{(M^{\alpha} - 1)} + L \right)$$

or

IEEE curves

$$t = TD \times \left(\frac{\beta}{(M^{\alpha} - 1)} + L \right)$$

where:

t	=	Operation time
β	=	Constant
M	=	I/Is
K	=	Constant
I	=	Measured current
Is	=	Current threshold setting
α	=	Constant
L	=	ANSI/IEEE constant (zero for IEC curves)
T	=	Time multiplier setting for IEC curves
TD	=	Time dial setting for IEEE curves

Curve description	Standard	β constant	α constant	L constant
Standard Inverse	IEC	0.14	0.02	0
Very Inverse	IEC	13.5	1	0
Extremely Inverse	IEC	80	2	0
Long Time Inverse	UK	120	1	0
Rectifier	UK	45900	5.6	0
Moderately Inverse	IEEE	0.0515	0.02	0.114
Very Inverse	IEEE	19.61	2	0.491
Extremely Inverse	IEEE	28.2	2	0.1217
Inverse	US	5.95	2	0.18
Short Time Inverse	US	0.16758	0.02	0.11858

Table 2 - Inverse time curves

The IEEE and US curves are set differently to the IEC/UK curves, with regard to the time setting. A time multiplier setting (TMS) is used to adjust the operating time of the IEC curves, whereas a time dial setting is employed for the IEEE/US curves. The menu is arranged such that if an IEC/UK curve is selected, the **I> Time Dial** cell is not visible and vice versa for the TMS setting.

The IEC/UK inverse characteristics can be used with a definite time reset characteristic, however, the IEEE/US curves may have an inverse or definite time reset characteristic. The following equation can used to calculate the inverse reset time for IEEE/US curves:

$$tRESET = \frac{TD \times S}{(1 - M^2)} \text{ in seconds}$$

where:
TD = Time dial setting for IEEE curves
S = Constant
M = I/Is

Curve description	Standard	S constant
Moderately Inverse	IEEE	4.85
Very Inverse	IEEE	21.6
Extremely Inverse	IEEE	29.1
Inverse	US	5.95
Short Time Inverse	US	2.261

Table 3 - Reset curves

1.6.1 RI Curve

The RI curve (electromechanical) has been included in the first and second stage characteristic setting options for phase overcurrent and both earth fault 1 and earth fault 2 protections. The curve is represented by the following equation.

$$t = K \times \left(\frac{1}{0.339 - \left({}^{0.236}/_{M} \right)} \right) \text{ in seconds}$$

With K adjustable from 0.1 to 10 in steps of 0.05

1.6.2 Timer Hold Facility

The first two stages of overcurrent protection in the P34x relays are provided with a timer hold facility, which may either be set to zero or to a definite time value. Setting of the timer to zero means that the overcurrent timer for that stage will reset instantaneously once the current falls below 95% of the current setting. Setting of the hold timer to a value other than zero, delays the resetting of the protection element timers for this period. When the reset time of the overcurrent relay is instantaneous, the relay will be repeatedly reset and not be able to trip until the fault becomes permanent. By using the Timer Hold facility the relay will integrate the fault current pulses, thereby reducing fault clearance time.

The timer hold facility can be found for the first and second overcurrent stages as settings **I>1 tRESET** and **I>2 tRESET**, respectively. If an IEC inverse or DT operating characteristic is chosen, this time delay is set via the **I>1/2 tRESET** setting. If an IEEE/US operate curve is selected, the reset characteristic may be set to either definite time or inverse time as selected in cell **I>1/2 Reset Char**. If definite time (**DT**) is selected the **I>1/2 tRESET** cell may be used to set the time delay. If inverse time reset (**Inverse**) is selected the reset time will follow the inverse time operating characteristic, modified by the time dial setting, selected for **I>1/2 Function**.

The functional logic diagram for non-directional overcurrent is shown below.

A timer block input is available for each stage which will reset the overcurrent timers of all three phases if energized, taking account of the reset time delay if selected for the **I>1** and **I>2** stages (DDB 576-579). DDB signals are also available to indicate the start and trip of each phase of each stage of protection, (Starts: DDB 1040-1055, Trips: DDB 800-815). The state of the DDB signals can be programmed to be viewed in the **Monitor Bit x** cells of the **COMMISSION TESTS** column in the relay.

Overcurrent protection starts 1/2/3/4 are mapped internally to the ANY START DDB signal – DDB 992.

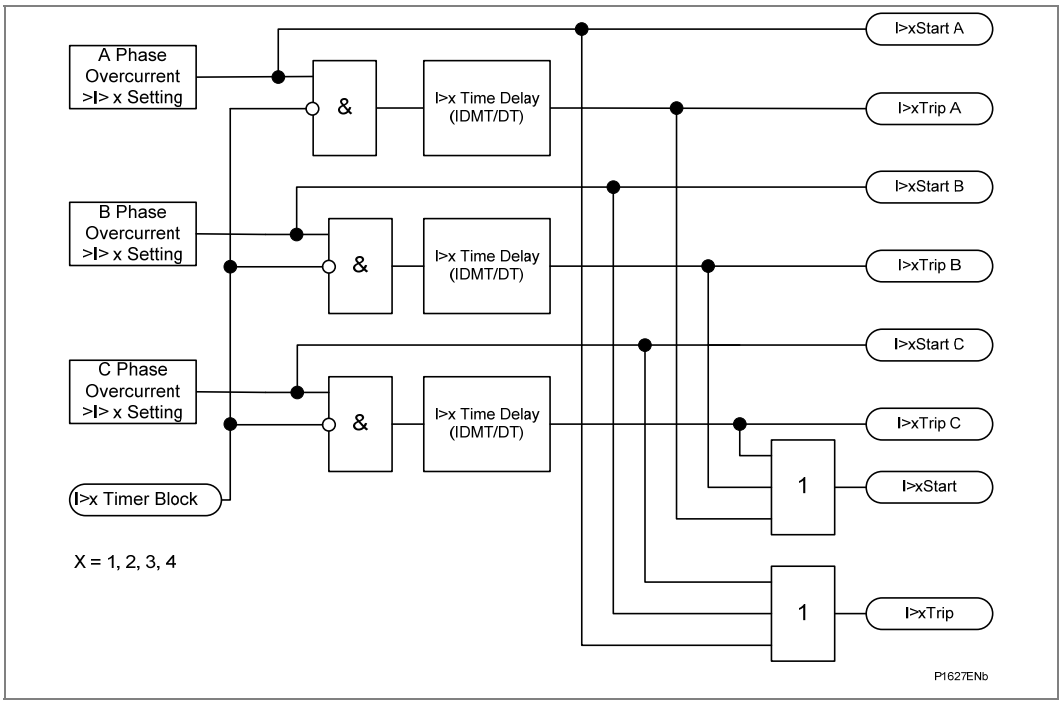

Figure 7 - Non-directional overcurrent logic diagram

1.7 Directional Overcurrent Protection (67)

The phase fault elements of the P34x relays are internally polarized by the quadrature phase-phase voltages, as shown in the table below:

Phase of protection	Operate current	Polarizing voltage
A Phase	IA	VBC
B Phase	IB	VCA
C Phase	IC	VAB

Table 4 - Directional overcurrent, operate and polarizing signals

Under system fault conditions, the fault current vector will lag its nominal phase voltage by an angle dependent upon the system X/R ratio. It is therefore a requirement that the relay operates with maximum sensitivity for currents lying in this region. This is achieved by means of the relay characteristic angle (RCA) setting; this defines the angle by which the current applied to the relay must be displaced from the voltage applied to the relay to obtain maximum relay sensitivity. This is set in cell **I>Char Angle** in the overcurrent menu. On the P34x relays, it is possible to set characteristic angles anywhere in the range –95° to +95°.

The functional logic block diagram for directional overcurrent is shown below.

The overcurrent level detector detects that the current magnitude is above the threshold and together with the respective polarizing voltage, a directional check is performed based on the following criteria:

Directional forward

-90° < (angle(I) - angle(V) - RCA) < 90°

Directional reverse

-90° > (angle(I) - angle(V) - RCA) > 90°

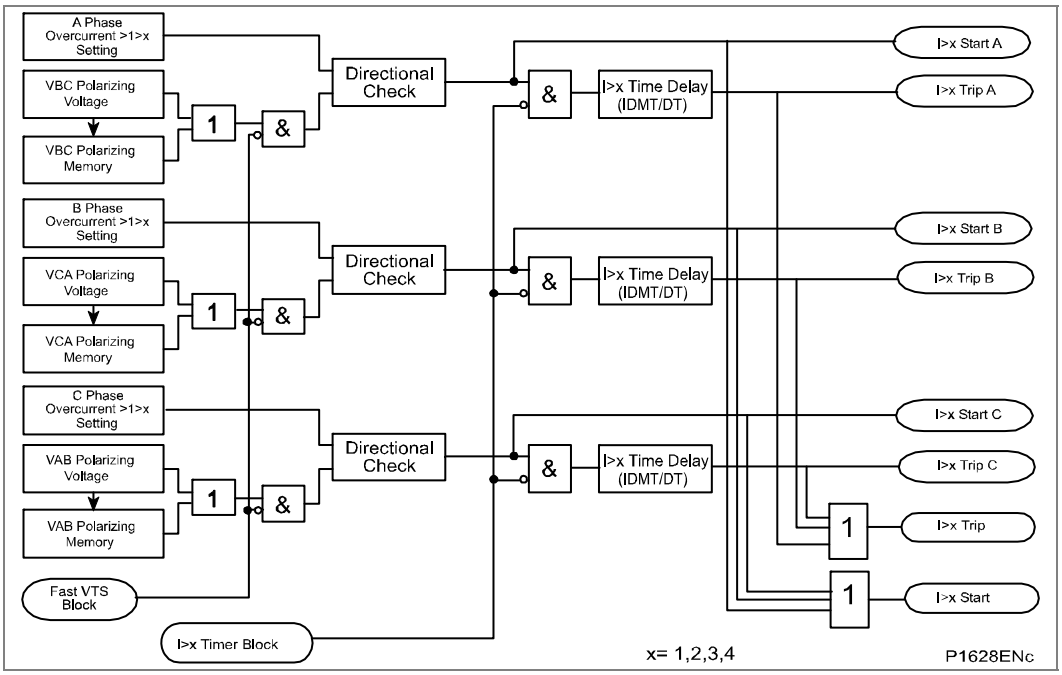

Figure 8 - Directional overcurrent logic

Any of the four overcurrent stages may be configured to be directional noting that IDMT characteristics are only selectable on the first two stages. When the element is selected as directional, a VTS Block option is available. When the relevant bit is set to 1,

operation of the Voltage Transformer Supervision (VTS), will block the stage if directionalized. When set to 0, the stage will revert to non-directional upon operation of the VTS.

1.7.1 Synchronous Polarization

For a close up three-phase fault, all three voltages will collapse to zero and no healthy phase voltages will be present. For this reason, the P341 relays include a synchronous polarization feature that stores the pre-fault voltage information and continues to apply it to the directional overcurrent elements for a time period of 3.2 seconds. This ensures that either instantaneous or time delayed directional overcurrent elements will be allowed to operate, even with a three-phase voltage collapse.

1.8 Negative Phase Sequence (NPS) Overcurrent Protection (46)

The P341 relays provide four independent stages of negative phase sequence overcurrent protection. Each stage has a current pick up setting **I2>n Current Set**, and is time delayed in operation by the adjustable timer **I2>n Time Delay**. The user may choose to directionalize operation of the elements, for either forward or reverse fault protection for which a suitable relay characteristic angle may be set. Alternatively, the elements may be set as non-directional. For the negative phase sequence directional elements to operate, the relay must detect a polarizing voltage above a minimum threshold, **I2> V2pol Set**.

When the element is selected as directional, a VTS Block option is available. When the relevant bit set to 1, operation of the Voltage Transformer Supervision (VTS), will block the stage if directionalized. When set to 0, the stage will revert to non-directional upon operation of the VTS.

The negative phase sequence overcurrent element has a current pick up setting **I2>x Current Set**, and is time delayed in operation by an adjustable timer **I2>x Time Delay**. The user may choose to directionalize operation of the element, for either forward or reverse fault protection for which a suitable relay characteristic angle may be set. Alternatively, the element may be set as non-directional.

A timer block input is available for each stage which will reset the NPS overcurrent timers of the relevant stage if energized, (DDB 583-586). All 4 stages can be blocked by energizing the inhibit DDB signal via the PSL (I2> Inhibit: DDB 582). DDB signals are also available to indicate the start and trip of each stage of protection, (Starts: DDB 1064-1067, Trips: DDB 824-827). The state of the DDB signals can be programmed to be viewed in the **Monitor Bit x** cells of the **COMMISSION TESTS** column in the relay.

Negative sequence overcurrent protection starts 1/2/3/4 are mapped internally to the ANY START DDB signal – DDB 992.

The non-directional and directional operation is shown in the following diagrams:

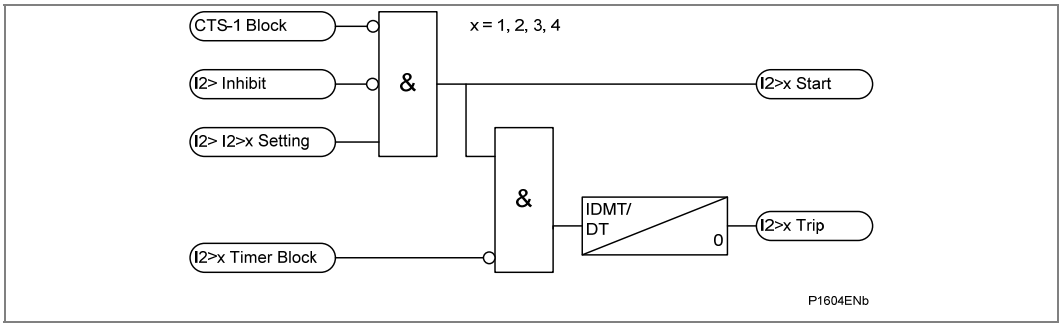

Figure 9 - Negative sequence overcurrent non-directional operation

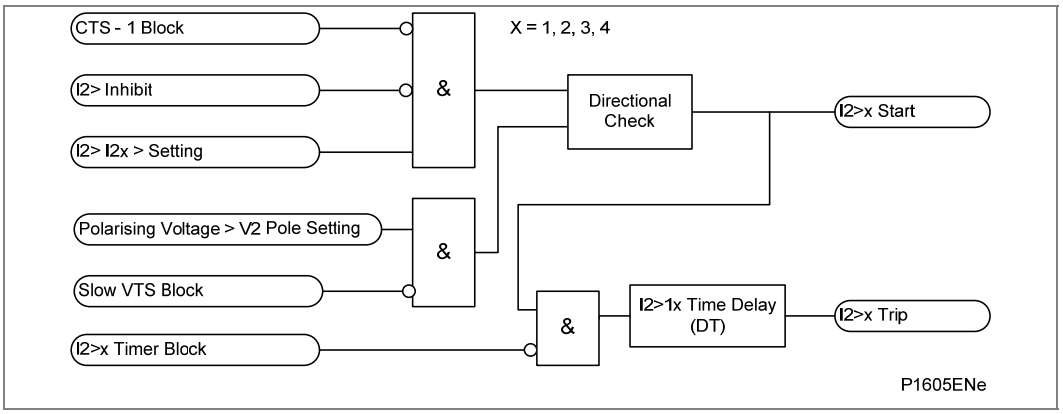

Figure 10 - Directionalizing the negative phase sequence overcurrent element

Directionality is achieved by comparison of the angle between the negative phase sequence voltage and the negative phase sequence current and the element may be selected to operate in either the forward or reverse direction. A suitable relay characteristic angle setting (I2> Char Angle) is chosen to provide optimum performance.

This setting should be set equal to the phase angle of the negative sequence current with respect to the inverted negative sequence voltage (–V2), in order to be at the center of the directional characteristic.

For the negative phase sequence directional elements to operate, the relay must detect a polarizing voltage above a minimum threshold, **I2> V2pol Set**. This must be set in excess of any steady state negative phase sequence voltage. This may be determined during the commissioning stage by viewing the negative phase sequence measurements in the relay.

1.9 Earth Fault Protection (50N/51N)

The P341 relay has a total of four input current transformers; one for each of the phase current inputs and one for supplying the sensitive earth fault protection element. Residual, or earth fault, current can be derived from the sum of the phase current inputs. With this flexible input arrangement, various combinations of standard, Sensitive Earth Fault (SEF) and Restricted Earth Fault (REF) protection may be configured within the relay.

To achieve the sensitive setting range that is available in the P341 relay for SEF protection, the input CT is designed specifically to operate at low current magnitudes. This common input is used to drive either the SEF or REF protection which are enabled / disabled accordingly within the relay menu.

1.9.1 Standard Earth Fault Protection Element

The four stage Standard Earth Fault protection operates from earth fault current which is derived internally from the summation of the three phase currents.

The first and second stages have selectable IDMT or DT characteristics, whilst the third and fourth stages are DT only. Each stage is selectable to be either non-directional, directional forward or directional reverse. The Timer Hold facility, previously described for the overcurrent elements, is available on each of the first two stages.

The logic diagram for non-directional earth fault overcurrent is shown in Figure 11.

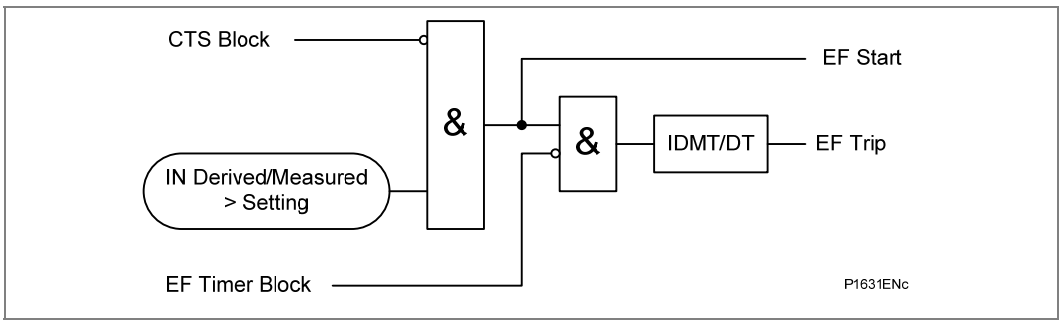

Figure 11 - Non-directional EF logic (single stage)

Each stage can be blocked by energizing the relevant DDB signal via the PSL (DDB 544, DDB 545, DDB 546, DDB 547). This allows the earth fault protection to be integrated into busbar protection schemes, see the Application Notes chapter, or can be used to improve grading with downstream devices. DDB signals are also available to indicate the start and trip of each phase of each stage of protection, (Starts: DDB 1008-1011, Trips: DDB 768-771). The state of the DDB signals can be programmed to be viewed in the **Monitor Bit x** cells of the **COMMISSION TESTS** column in the relay.

1.9.2 IDG Curve

The IDG curve is commonly used for time delayed earth fault protection in the Swedish market. This curve is available in stages 1 and 2 of Earth Fault protection.

The IDG curve is represented by the following equation:

$$t = 5.8 - 1.35 \log_e \left(\frac{I}{IN > Setting} \right) \text{ in seconds}$$

Where

I = Measured current

IN>Setting = An adjustable setting which defines the start point of the characteristic

Although the start point of the characteristic is defined by the **IN>** setting, the actual relay current threshold is a different setting called **IDG Is**. The **IDG Is** setting is set as a multiple of **IN>.**

An additional setting **IDG Time** is also used to set the minimum operating time at high levels of fault current.

Figure 12 shows how the IDG characteristic is implemented.

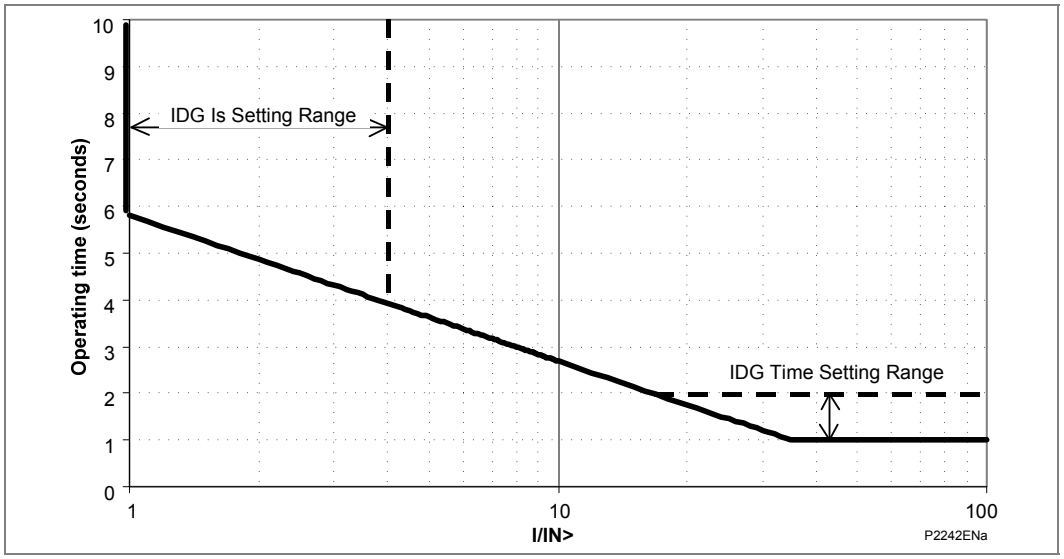

Figure 12 - IDG characteristic

1.9.3 Sensitive Earth Fault (SEF) Protection Element

If a system is earthed through high impedance, or is subject to high ground fault resistance, the earth fault level will be severely limited. Consequently, the applied earth fault protection requires both an appropriate characteristic and a sensitive setting range in order to be effective. A separate 4 stage Sensitive Earth Fault element is provided within the P341 relay for this purpose, this has a dedicated CT input.

Each stage can be blocked by energizing the relevant DDB signal via the PSL (DDB 548, DDB 549, DDB 550, DDB 551). This allows the earth fault protection to be integrated into busbar protection schemes, as shown in section 0, or can be used to improve grading with downstream devices. DDB signals are also available to indicate the start and trip of each phase of each stage of protection, (Starts: DDB 1012-1015, Trips: DDB 773-776). The state of the DDB signals can be programmed to be viewed in the **Monitor Bit x** cells of the **COMMISSION TESTS** column in the relay.

1.10 Directional Earth Fault (DEF) Protection (67N)

Each of the four stages of standard earth fault protection and SEF protection may be set to be directional if required. Consequently, as with the application of directional overcurrent protection, a voltage supply is required by the relay to provide the necessary polarization.

With the standard earth fault protection element in the P341 relay, two options are available for polarization; Residual Voltage or Negative Sequence.

1.10.1 Residual Voltage Polarization

With earth fault protection, the polarizing signal requires to be representative of the earth fault condition. As residual voltage is generated during earth fault conditions, this quantity is commonly used to polarize DEF elements. The P341 relay can internally derive this voltage from the 3 phase voltage input, or can measure the voltage via the neutral displacement or residual overvoltage input. The method of measuring the polarizing signal is set in the **IN> Vnpol Input** cell. Where the residual voltage is derived from the 3 phase voltages a 5-limb or three single phase VT's must be used. These types of VT design allow the passage of residual flux and consequently permit the relay to derive the required residual voltage. In addition, the primary star point of the VT must be earthed. A three limb VT has no path for residual flux and is therefore unsuitable to supply the relay.

It is possible that small levels of residual voltage will be present under normal system conditions due to system imbalances, VT inaccuracies, relay tolerances etc. Hence, the P341 relay includes a user settable threshold, **IN>VNpol Set**, which must be exceeded in order for the DEF function to be operational. The residual voltage measurement provided in the **MEASUREMENTS 1** column of the menu may assist in determining the required threshold setting during the commissioning stage, as this will indicate the level of standing residual voltage present.

Note:	*Residual voltage is nominally 180º out of phase with residual current. Consequently, the DEF relays are polarized from the '–Vres' quantity. This 180º phase shift is automatically introduced within the P341 relay.*

The logic diagram for directional earth fault overcurrent with neutral voltage polarization is shown below.

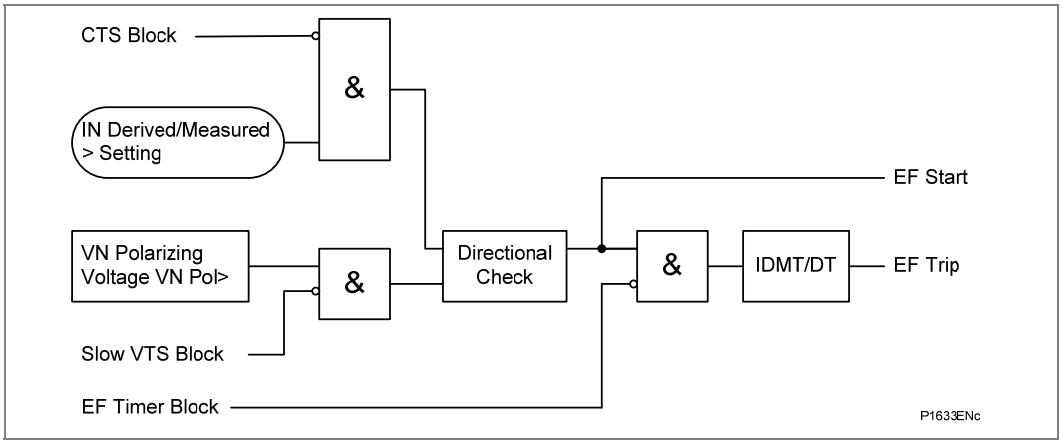

Figure 13 - Directional EF with neutral voltage polarization (single state)

VT Supervision (VTS) selectively blocks the directional protection or causes it to revert to non-directional operation. When selected to block the directional protection, VTS blocking is applied to the directional checking which effectively blocks the start outputs as well.

1.10.2 Negative Sequence Polarization

In certain applications, the use of residual voltage polarization of DEF may either be not possible to achieve, or problematic. An example of the former case would be where a suitable type of VT was unavailable, for example if only a three limb VT was fitted. An example of the latter case would be an HV/EHV parallel line application where problems with zero sequence mutual coupling may exist.

In either of these situations, the problem may be solved by the use of Negative Phase Sequence (NPS) quantities for polarization. This method determines the fault direction by comparison of NPS voltage with NPS current. The operate quantity, however, is still residual current. This is available for selection on the derived earth fault element but not on the SEF protection. It requires a voltage and current threshold to be set in cells **IN> V2pol Set** & **IN> I2pol Set**, respectively.

Negative sequence polarizing is not recommended for impedance earthed systems regardless of the type of VT feeding the relay. This is due to the reduced earth fault current limiting the voltage drop across the negative phase sequence source impedance (V2pol) to negligible levels. If this voltage is less than 0.5 volts the relay will cease to provide DEF protection.

The logic diagram for directional earth fault overcurrent with negative sequence polarization is shown below.

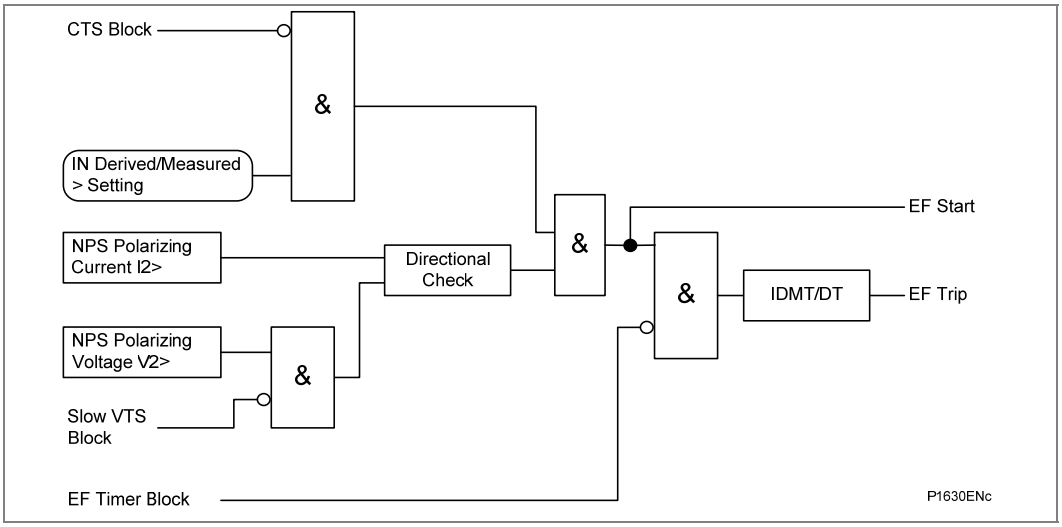

Figure 14 - Directional EF with negative sequence polarization (single stage)

The directional criteria with negative sequence polarization is given below:

Directional forward

-90° < (angle (I2) - angle(V2 + 180°) - RCA) < 90°

Directional reverse

-90° > (angle (I2) - angle(V2 + 180°) - RCA) > 90°

1.10.3 Operation of Sensitive Earth Fault Element (67N/67W)

The SEF element is designed to be applied to resistively earthed, insulated and compensated networks and have distinct functions to cater for these different requirements. The logic diagram for sensitive directional earth fault overcurrent with neutral voltage polarization is shown in Figure 15.

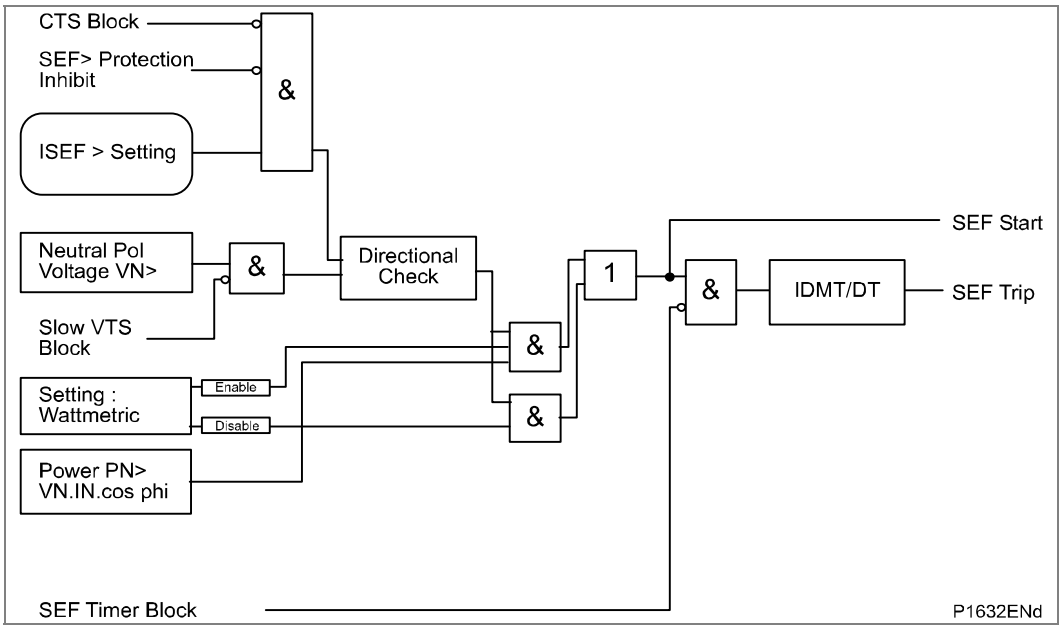

Figure 15 - Directional SEF with VN polarization (single stage)

The sensitive earth fault protection can be set IN/OUT of service using the appropriate DDB block signal that can be operated from an opto input or control command. VT Supervision (VTS) selectively blocks the directional protection or causes it to revert to non-directional operation. When selected to block the directional protection, VTS blocking is applied to the directional checking which effectively blocks the start outputs as well.

The directional check criteria are given below for the standard directional sensitive earth fault element:

Directional forward

-90° < (angle(IN) - angle(VN + 180°) - RCA) < 90°

Directional reverse

-90° > (angle(IN) - angle(VN + 180°) - RCA) > 90°

Three possibilities exist for the type of protection element that may be applied for earth fault detection:

1. A suitably sensitive directional earth fault relay having a relay characteristic angle setting (RCA) of zero degrees, with the possibility of fine adjustment about this threshold.
2. A sensitive directional zero sequence wattmetric relay having similar requirements to 1. above with respect to the required RCA settings.
3. A sensitive directional earth fault relay having Icosφ and Isinφ characteristics.

All stages of the sensitive earth fault element of the P341 relay are settable down to 0.5% of rated current and would therefore fulfill the requirements of the first method listed above and could therefore be applied successfully. However, many utilities (particularly in central Europe) have standardized on the wattmetric method of earth fault detection, which is described in the following section.

Zero sequence power measurement, as a derivative of Vo and Io, offers improved relay security against false operation with any spurious core balance CT output for non earth fault conditions. This is also the case for a sensitive directional earth fault relay having an adjustable Vo polarizing threshold.

Some utilities in Scandinavia prefer to use Icosϕ/Isinϕ for non compensated Peterson Coil or insulated networks.

1.10.4 Wattmetric Characteristic

The previous analysis has shown that a small angular difference exists between the spill current on the healthy and faulted feeders. It can be seen that this angular difference gives rise to active components of current which are in antiphase to one another. This is shown in Figure 16 below.

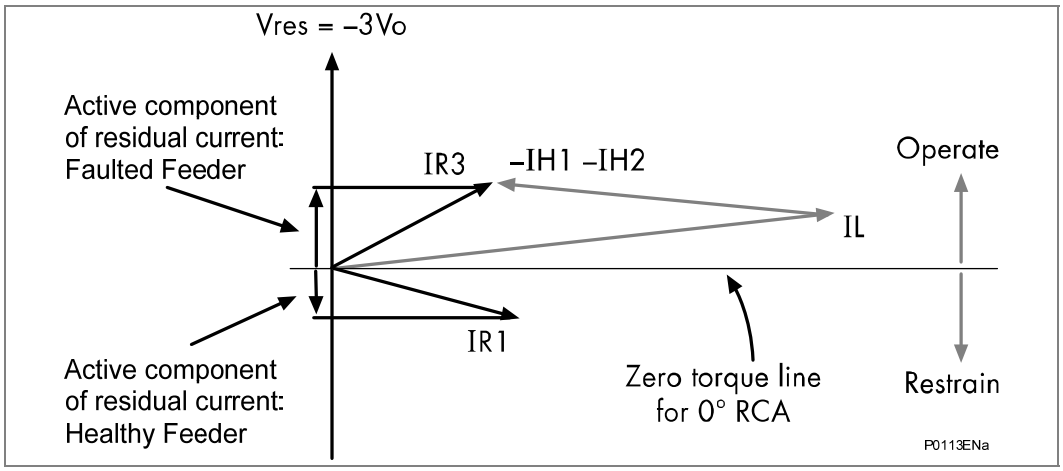

Figure 16 - Resistive components of spill current

Consequently, the active components of zero sequence power will also lie in similar planes and so a relay capable of detecting active power would be able to make a discriminatory decision. i.e. if the wattmetric component of zero sequence power was detected in the forward direction, then this would be indicative of a fault on that feeder; if power was detected in the reverse direction, then the fault must be present on an adjacent feeder or at the source.

For operation of the directional earth fault element within the P341 relay, all three of the settable thresholds on the relay must be exceeded; namely the current **ISEF>**, the voltage **ISEF>VNpol Set** and the power **PN> Setting**.

As can be seen from the following formula, the power setting within the relay menu is called PN> and is therefore calculated using residual rather than zero sequence quantities. Residual quantities are three times their respective zero sequence values and so the complete formula for operation is as shown below:

$$Vres \times Ires \times \cos(\phi - \phi c) = 9 \times Vo \times Io \times \cos(\phi - \phi c)$$

Where:

ϕ	=	Angle between the Polarizing Voltage (-Vres) and the Residual Current
ϕc	=	Relay Characteristic Angle (RCA) Setting (ISEF> Char Angle)
Vres	=	Residual Voltage
Ires	=	Residual Current
Vo	=	Zero Sequence Voltage
Io	=	Zero Sequence Current

The action of setting the PN> threshold to zero would effectively disable the wattmetric function and the relay would operate as a basic, sensitive directional earth fault element. However, if this is required, then the **SEF** option can be selected from the **Sens E/F Options** cell in the menu.

A further point to note is that when a power threshold other than zero is selected, a slight alteration is made to the angular boundaries of the directional characteristic. Rather than being ±90° from the RCA, they are made slightly narrower at ±85°.

The directional check criteria is as follows:

Directional forward

-85° < (angle(IN) - angle(VN + 180°) - RCA) < 85°

Directional reverse

-85° > (angle(IN) - angle(VN + 180°) - RCA) > 85°

1.10.5 Icosϕ /Isinϕ Characteristic

In some applications, the residual current on the healthy feeder can lie just inside the operating boundary following a fault condition. The residual current for the faulted feeder lies close to the operating boundary.

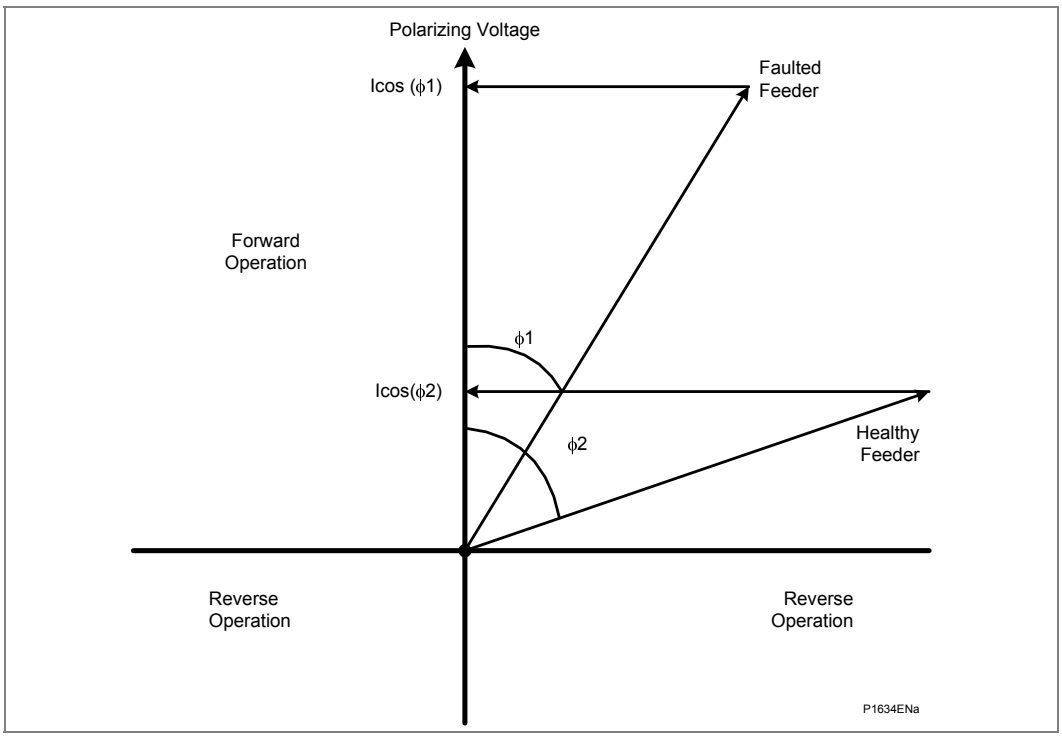

Figure 17 - Operating characteristic for Icosϕ

The diagram illustrates the method of discrimination when the real (cosφ) component is considered, since faults close to the polarizing voltage will have a higher magnitude than those close to the operating boundary. In the diagram, it is assumed that the actual magnitude of current is I in both the faulted and non-faulted feeders.

Active component Icosφ

The criterion for operation is: I (cosφ) > Isef

Reactive component Isinφ

The criterion for operation is: I (sinφ) > Isef

Where Isef is the relay stage sensitive earth fault current setting.

If any stage is set non-directional, the element reverts back to normal operation based on current magnitude I with no directional decision. In this case, correct discrimination is achieved by means of an Icosφ characteristic as the faulted feeder will have a large active component of residual current, whilst the healthy feeder will have a small value. For insulated earth applications, it is common to use the Isinφ characteristic.

1.10.6 Restricted Earth Fault (REF) Protection (64)

The REF protection in the P341 relays may be configured to operate as a high impedance differential. The following sections describe the application of the relay.

Note	*The high impedance REF element of the relay shares the same CT input as the SEF protection. Hence, only one of these elements may be selected.*

A DDB signal is available to indicate the tripping of the REF protection, (DDB 772). The state of the DDB signals can be programmed to be viewed in the **Monitor Bit x** cells of the **COMMISSION TESTS** column in the relay.

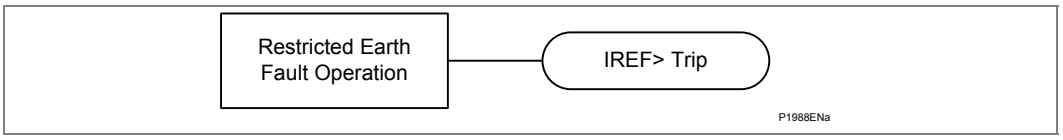

Figure 18 - Restricted earth fault logic diagram

1.10.7 High Impedance Restricted Earth Fault Protection

The high impedance principle is best explained by considering a differential scheme where one CT is saturated for an external fault, as shown in Figure 19.

If the relay circuit is considered to be a very high impedance, the secondary current produced by the healthy CT will flow through the saturated CT. If CT magnetizing impedance of the saturated CT is considered to be negligible, the maximum voltage across the relay circuit will be equal to the secondary fault current multiplied by the connected impedance, (R_{L3} + R_{L4} + R_{CT2}).

The relay can be made stable for this maximum applied voltage by increasing the overall impedance of the relay circuit, such that the resulting current through the relay is less than its current setting. As the impedance of the relay input alone is relatively low, a series connected external resistor is required. The value of this resistor, RST, is calculated by the formula shown in Figure 19.

An additional non-linear resistor, Metrosil, may be required to limit the peak secondary circuit voltage during internal fault conditions.

To ensure that the protection will operate quickly during an internal fault the CT's used to operate the protection must have a kneepoint voltage of at least 4 Vs.

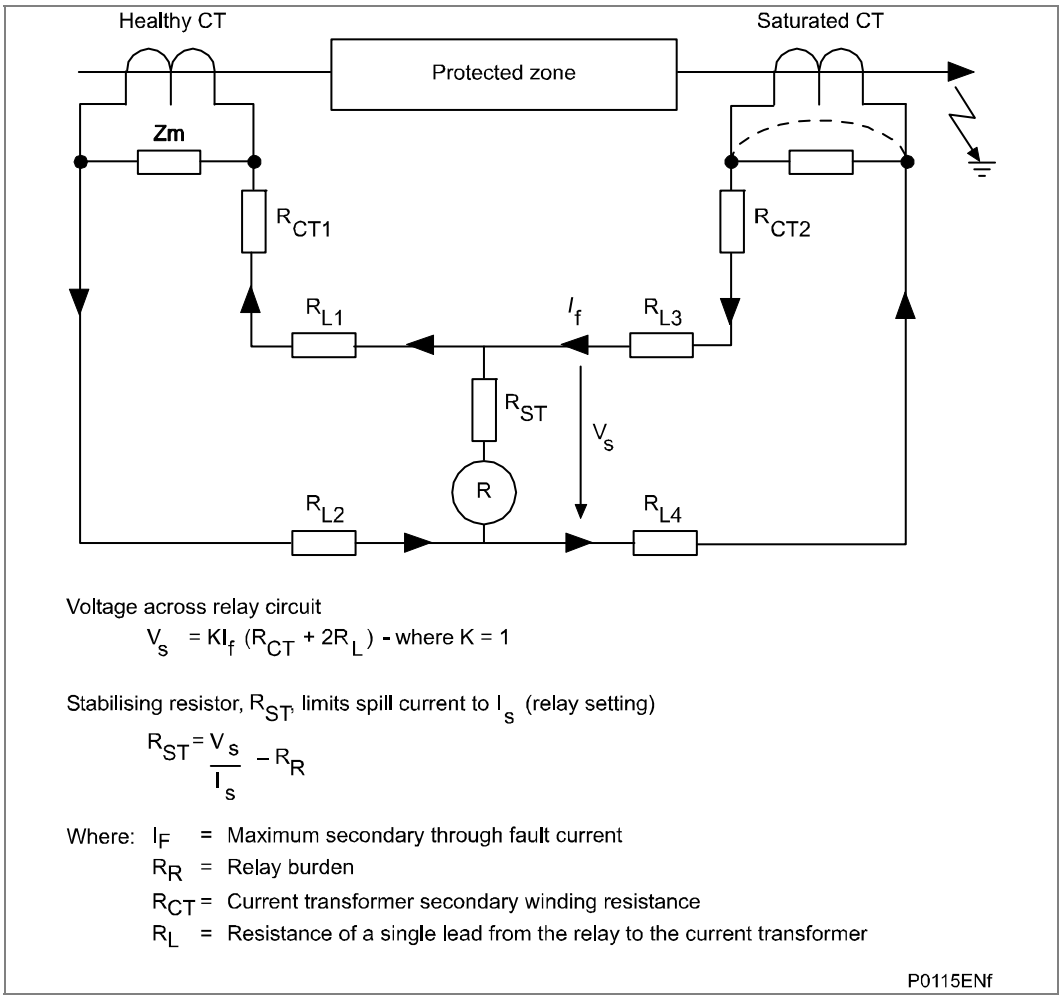

Figure 19 - Principle of high impedance differential protection

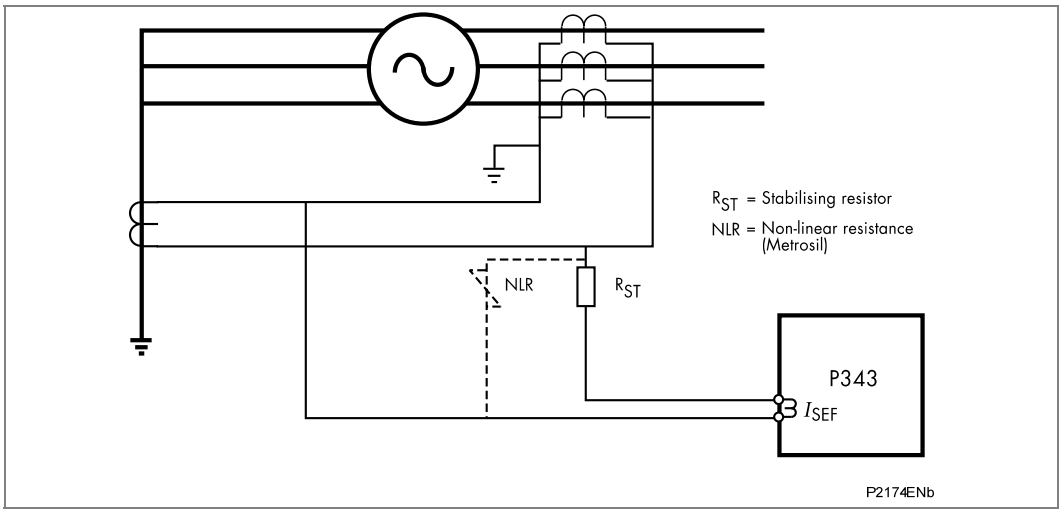

Figure 20 - Relay connections for high impedance REF protection

The necessary relay connections for high impedance REF are shown in Figure 20.

Figure 20 shows the high impedance protection uses an external differential connection between the line CTs and neutral CT. The SEF input is then connected to the differential circuit with a stabilizing resistor in series.

1.11 Residual Overvoltage/Neutral Voltage Displacement Protection (59N)

The neutral voltage displacement protection function of the P341 relay includes two stages of derived (VN>1, VN>2) and two stages of measured (VN>3, VN>4) neutral overvoltage protection with adjustable time delays.

The relay derives the neutral/residual voltage operating quantity from this equation:

Vneutral = Va + Vb + Vc

A dedicated voltage input (VN input) is available in the P341 for this protection function which may be used to measure the residual voltage supplied from either an open delta connected VT or the voltage measured on the secondary side of a distribution transformer earth connection, as shown in Figure 21. Alternatively, the residual voltage may be derived internally from the three-phase to neutral voltage measurements. Where derived measurement is used the three-phase to neutral voltage must be supplied from either a 5-limb or three single-phase VTs. These types of VT design allow the passage of residual flux and consequently permit the relay to derive the required residual voltage. In addition, the primary star point of the VT must be earthed. A three limb VT has no path for residual flux and is therefore unsuitable to supply the relay when residual voltage is required to be derived from the phase to neutral voltage measurement.

The residual voltage signal can be used to provide interturn protection for machine windings as well as earth fault protection. The residual voltage signal also provides a polarizing voltage signal for the directional and sensitive directional earth fault protection functions.

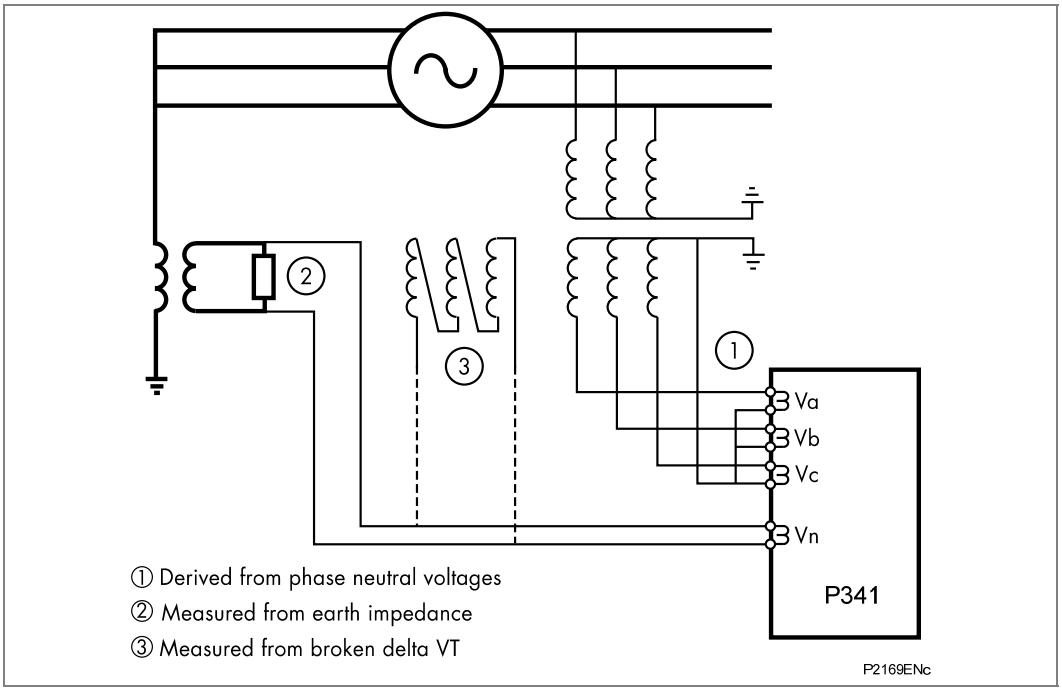

Figure 21 - Alternative relay connections for residual overvoltage/NVD protection

The functional block diagram of the first stage residual overvoltage is shown below:

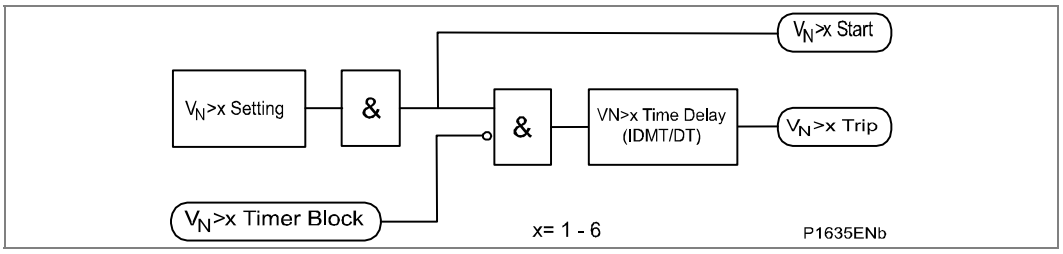

Figure 22 - Residual overvoltage logic (single stage)

VTS blocking when asserted, effectively blocks the start outputs. Only the derived neutral voltage protection stages (VN>1, VN>2) are blocked by the VT Supervision.

A timer block input is available for each stage which will reset the residual overvoltage timers of the relevant stage if energized, (DDB 592-595). DDB signals are also available to indicate the start and trip of each stage of protection, (Starts: DDB 1088-1099 Trips: 832-835). The state of the DDB signals can be programmed to be viewed in the **Monitor Bit x** cells of the **COMMISSION TESTS** column in the relay.

The residual overvoltage fault protection starts are mapped internally to the ANY START DDB signal – DDB 992.

The IDMT characteristic available on the first stage is defined by the formula:

$$t = K / (M - 1)$$

Where:
K = Time Multiplier Setting (**VN>1 TMS**)
t = Operating Time in Seconds
M = Measured Residual Voltage/Relay Setting Voltage (**VN>1 Voltage Set**)

1.12 Undervoltage Protection (27)

Both the under and overvoltage protection functions can be found in the relay menu **Volt Protection**. The undervoltage protection included within the P341 relays consists of two independent stages. These are configurable as either phase to phase or phase to neutral measuring within the **V<Measur't mode** cell.

Note	*If the undervoltage protection is set for phase-phase operation then the DDB signals V<1/2 Start/Trip A/AB, V<1/2 Start/Trip B/BC, V<1/2 Start/ Trip C/CA refer to V<1/2 Start/Trip AB and V<1/2 Start/Trip BC and V<1/2 Start/Trip CA. If set for phase-neutral then the DDB signals V<1/2 Start/Trip A/AB, V<1/2 Start/Trip B/BC, V<1/2 Start/Trip C/CA refer to V<1/2 Start/Trip A and V<1/2 Start/Trip B and V<1/2 Start/Trip C.*

Stage 1 may be selected as **IDMT**, **DT** or **Disabled**, within the **V<1 Function** cell. Stage 2 is DT only and is enabled/disabled in the **V<2 status** cell.

The IDMT characteristic available on the first stage is defined by the formula:

$$t = K / (M - 1)$$

Where:
K = Time multiplier setting
t = Operating time in seconds
M = Measured voltage/relay setting voltage (V< Voltage Set)

Two stages are included to provide both alarm and trip stages, where required. Alternatively, different time settings may be required depending upon the severity of the voltage dip, i.e. motor loads will be able to withstand a small voltage depression for a longer time than if a major voltage excursion were to occur.

Outputs are available for single or three-phase conditions via the **V<Operate Mode** cell.

A timer block input is available for each stage which will reset the undervoltage timers of the relevant stage if energized, (DDB 601, DDB 602). DDB signals are also available to indicate a three-phase and per phase start and trip, (Starts: DDB 1103-1110, Trips: DDB 847-854). The state of the DDB signals can be programmed to be viewed in the **Monitor Bit x** cells of the **COMMISSION TESTS** column in the relay.

Undervoltage protection starts are mapped internally to the ANY START DDB signal – DDB 992.

The logic diagram of the undervoltage function is shown in Figure 23.

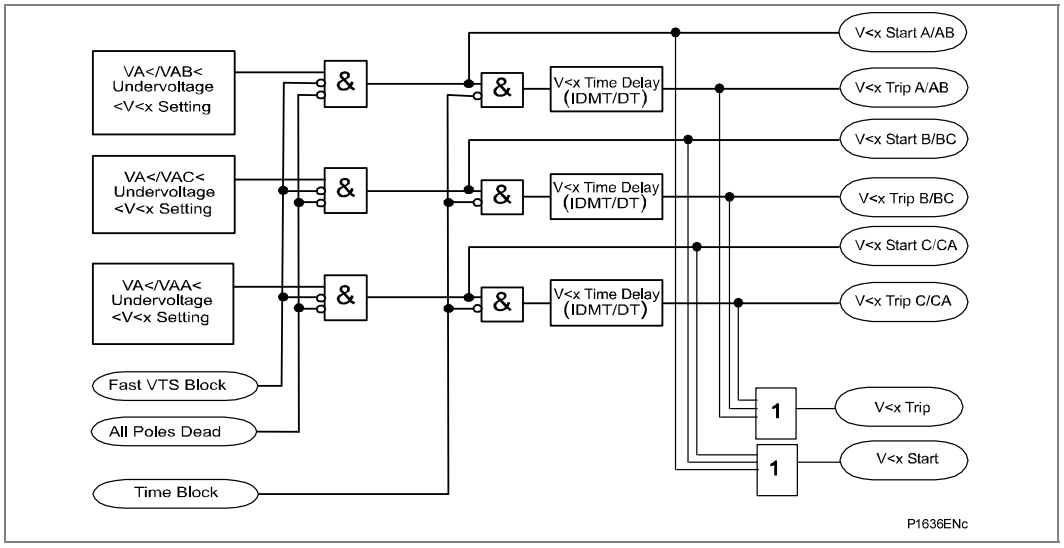

Figure 23 - Undervoltage - single and three phase tripping mode (single stage)

When the protected feeder is de-energized, or the circuit breaker is opened, an undervoltage condition would be detected. Therefore, the **V<Poledead Inh** cell is included for each of the two stages to block the undervoltage protection from operating for this condition. If the cell is enabled, the relevant stage will become inhibited by the in-built pole dead logic within the relay. This logic produces an output when it detects either an open circuit breaker via auxiliary contacts feeding the relay opto inputs or it detects a combination of both undercurrent and undervoltage on any one phase.

1.13 Overvoltage Protection (59)

Both the under and overvoltage protection functions can be found in the relay menu **Volt Protection**. The overvoltage protection included within the P341 relays consists of two independent stages. These are configurable as either phase to phase or phase to neutral measuring within the **V>Measur't mode** cell.

Note	*If the overvoltage protection is set for phase-phase operation then the DDB signals V>1/2 Start/Trip A/AB, V>1/2 Start/Trip B/BC, V>1/2 Start/Trip C/CA refer to V>1/2 Start/Trip AB and V>1/2 Start/Trip BC and V>1/2 Start/Trip CA. If set for phase-neutral then the DDB signals V>1/2 Start/Trip A/AB, V>1/2 Start/Trip B/BC, V>1/2 Start/Trip C/CA refer to V>1/2 Start/Trip A and V>1/2 Start/Trip B and V>1/2 Start/Trip C.*

Stage 1 may be selected as **IDMT**, **DT** or **Disabled**, within the **V>1 Function** cell. Stage 2 is DT only and is enabled/disabled in the **V>2 status** cell.

The IDMT characteristic available on the first stage is defined by the formula:

$$t = K / (M - 1)$$

Where:
K = Time multiplier setting
t = Operating time in seconds
M = Measured voltage / relay setting voltage (V> Voltage Set)

A timer block input is available for each stage which will reset the undervoltage timers of the relevant stage if energized, (DDB 598, DDB 599). DDB signals are also available to indicate a three-phase and per phase start and trip, (Starts: DDB 1094-1101, Trips: DDB 838-875). The state of the DDB signals can be programmed to be viewed in the **Monitor Bit x** cells of the **COMMISSION TESTS** column in the relay.

Overvoltage protection starts are mapped internally to the ANY START DDB signal – DDB 992.

The logic diagram of the overvoltage function is shown in Figure 24.

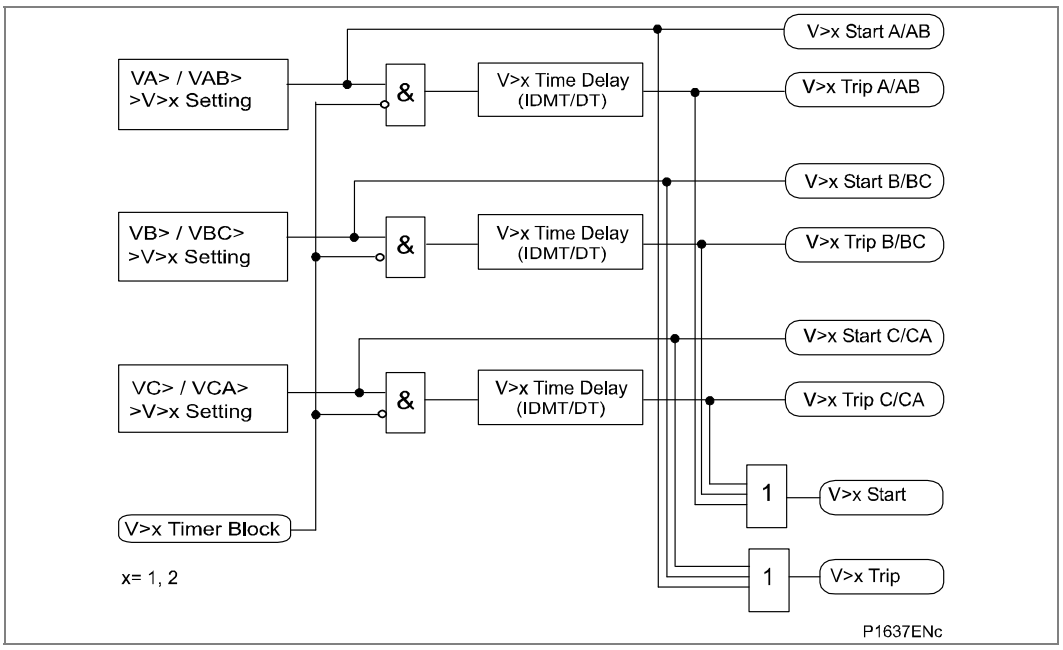

Figure 24 - Overvoltage - single and three phase tripping mode (single stage)

1.14 Negative Sequence Overvoltage Protection (47)

The P341 relay includes a negative phase sequence overvoltage element. This element monitors the input voltage rotation and magnitude (normally from a bus connected voltage transformer) and may be interlocked with the machine circuit breaker to prevent the machine from being energized whilst incorrect phase rotation exists.

This single stage is selectable as definite time only and is enabled within the **V2>status** cell.

The logic diagram for the negative sequence overvoltage protection is shown below:

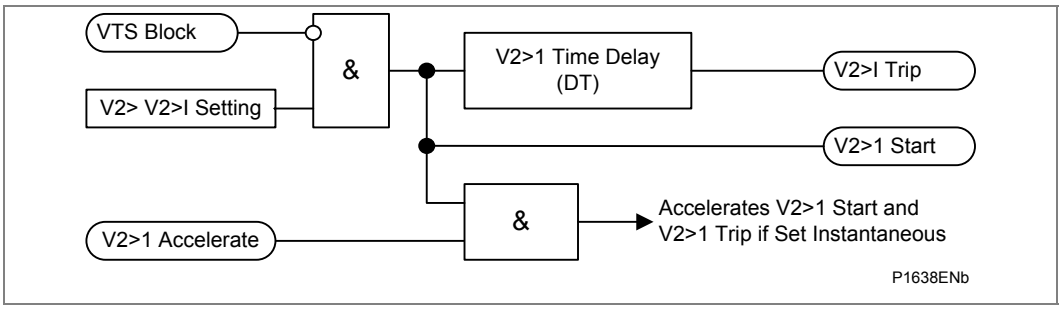

Figure 25 - Negative sequence overvoltage element logic

DDB signals are available to indicate a start and a trip, (Start: DDB 1102, Trip: DDB 846). There is also a signal to accelerate the NPS overvoltage protection start (V2>1 Accelerate: DDB 600) which accelerates the operating time of the function from typically 80 ms to 40 ms when set to instantaneous.

The state of the DDB signals can be programmed to be viewed in the **Monitor Bit x** cells of the **COMMISSION TESTS** column in the relay.

The NPS overvoltage protection start is mapped internally to the ANY START DDB signal – DDB 992.

1.15 Frequency Protection (81U/81O)

The P341 relay includes four stages of underfrequency and two stages of overfrequency protection to facilitate load shedding and subsequent restoration. The underfrequency stages may be optionally blocked by a pole dead (CB Open) condition. All the stages may be enabled/disabled in the **F<n Status** or **F>n Status** cell depending on which element is selected.

The logic diagram for the underfrequency logic is as shown in Figure 26. Only a single stage is shown. The other three stages are identical in functionality.

If the frequency is below the setting and not blocked the DT timer is started. Blocking may come from the All_Poledead signal (selectively enabled for each stage) or the underfrequency timer block.

If the frequency cannot be determined (Frequency Not Found, DDB 1295), the function is also blocked.

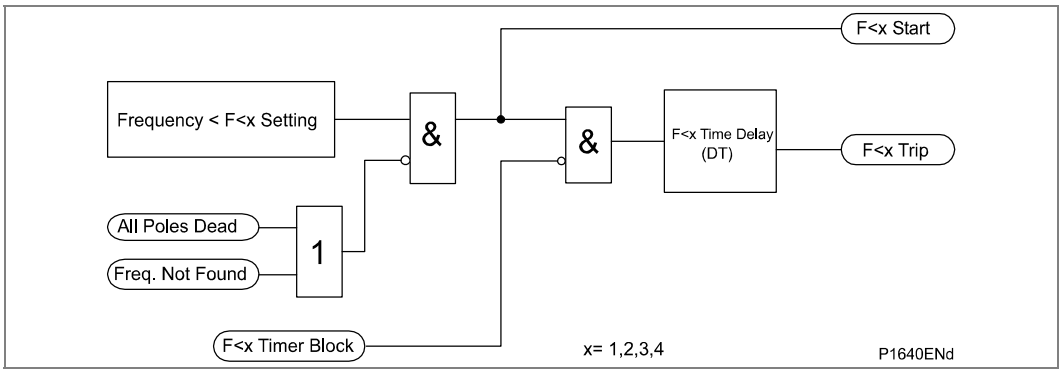

Figure 26 - Underfrequency logic (single stage)

The functional logic diagram for the overfrequency function is as shown in Figure 27. Only a single stage is shown as the other stages are identical in functionality. If the frequency is above the setting and not blocked the DT timer is started and after this has timed out the trip is produced. Blocking may come from the All_Poledead signal (selectively enabled for each stage) or the overfrequency timer block.

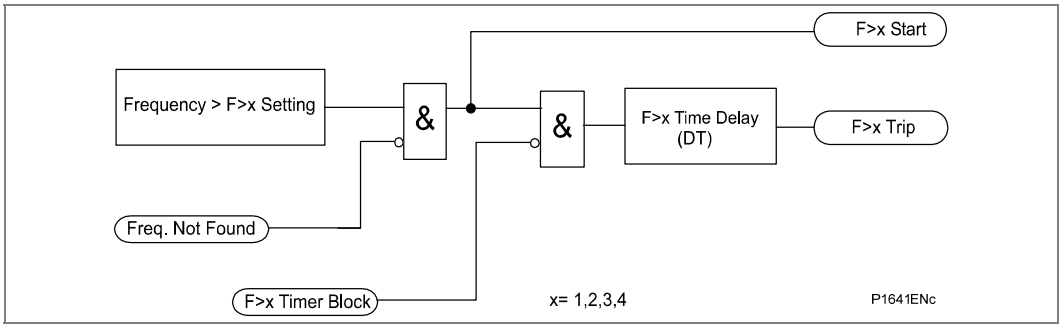

Figure 27 - Overfrequency logic (single stage)

A timer block input is available for each stage which will reset the under and overfrequency timers of the relevant stage if energized, (DDB 626-629, DDB 630-631). DDB signals are also available to indicate start and trip of each stage, (Starts: DDB 916-919, DDB 920-921, Trips: DDB 916-919, DDB 920-921).

The state of the DDB signals can be programmed to be viewed in the **Monitor Bit x** cells of the **COMMISSION TESTS** column in the relay.

The under and overfrequency protection starts are mapped internally to the ANY START DDB signal – DDB 992.

1.16 Thermal Overload Protection (49)

1.16.1 Introduction

The physical and electrical complexity of a generator or motor construction results in a complex thermal relationship. It is not therefore possible to create an accurate mathematical model of the true thermal characteristics of the machine.

However, if a generator/motor is considered to be a homogeneous body, developing heat internally at a constant rate and dissipating heat at a rate directly proportional to its temperature rise, it can be shown that the temperature at any instant is given by:

$$T = T_{max} (1-e^{-t/\tau})$$

Where:

T_{max} = final steady state temperature

τ = heating time constant

This assumes a thermal equilibrium in the form:

Heat developed = Heat stored + Heat dissipated

Temperature rise is proportional to the current squared:

$$T = K I_R^2 (1-e^{-t/\tau})$$

$$T = T_{max} = K I_R^2 \text{ if } t = \infty$$

Where:

I_R = the continuous current level which would produce a temperature T_{max} in the generator

For an overload current of 'I' the temperature is given by:

$$T = KI^2 (1-e^{-t/\tau})$$

For a machine not to exceed Tmax, the rated temperature, then the time 't' for which the machine can withstand the current 'I' can be shown to be given by:

$$T_{max} = KI_R2 = KI^2 (1-e^{-t/\tau})$$

$$t = \tau . \text{Loge} (1/(1-(I_R/I)^2))$$

An overload protection element should therefore satisfy the above relationship. The value of IR may be the full load current or a percentage of it depending on the design.

As previously stated it is an oversimplification to regard a generator/motor as an homogeneous body. The temperature rise of different parts or even of various points in the same part may be very uneven. However, it is reasonable to consider that the current-time relationship follows an inverse characteristic.

1.16.2 Thermal Replica

The P341 relay models the time-current thermal characteristic of a generator/motor by internally generating a thermal replica of the machine. The thermal overload protection can be selectively enabled or disabled. The positive and negative sequence components of the generator/motor current are measured independently and are combined together to form an equivalent current, I_{eq}, which is supplied to the replica circuit. The heating effect in the thermal replica is produced by I_{eq2} and therefore takes into account the heating effect due to both positive and negative sequence components of current.

Unbalanced phase currents will cause additional rotor heating that may not be accounted for by some thermal protection relays based on the measured current only. Unbalanced loading results in the flow of positive and negative sequence current components. Load

unbalance can arise as a result of single-phase loading, non-linear loads (involving power electronics or arc furnaces, etc.), uncleared or repetitive asymmetric faults, fuse operation, single-pole tripping and reclosing on transmission systems, broken overhead line conductors and asymmetric failures of switching devices. Any negative phase sequence component of stator current will set up a reverse-rotating component of stator flux that passes the rotor at twice synchronous speed. Such a flux component will induce double frequency eddy currents in the rotor, which can cause overheating of the rotor body, main rotor windings, damper windings etc. This extra heating is not accounted for in the thermal limit curves supplied by the generator manufacturer as these curves assume positive sequence currents only that come from a perfectly balanced supply and generator/motor design. The P341 thermal model may be biased to reflect the additional heating that is caused by negative sequence current when the machine is running. This biasing is done by creating an equivalent heating current rather than simply using the phase current. The M factor is a constant that relates negative sequence rotor resistance to positive sequence rotor resistance. If an M factor of 0 is used the unbalance biasing is disabled and the overload curve will time out against the measured generator/motor positive sequence current.

The equivalent current for operation of the overload protection is in accordance with the expression:

$I_{eq} = \sqrt{(I_1^2 + MI_2^2)}$

Where:
I1 = Positive sequence current
I2 = Negative sequence current
M = A user settable constant proportional to the thermal capacity of the machine

As previously described, the temperature of a generator/motor will rise exponentially with increasing current. Similarly, when the current decreases, the temperature also decreases in a similar manner. Therefore to achieve close sustained overload protection, the P341 relay incorporates a wide range of thermal time constants for heating and cooling.

Furthermore, the thermal withstand capability of the generator/motor is affected by heating in the winding prior to the overload. The thermal replica is designed to take account the extremes of zero pre-fault current, known as the ‘cold’ condition and the full rated pre-fault current, known as the ‘hot’ condition. With no pre-fault current the relay will be operating on the ‘cold curve’. When a generator/motor is or has been running at full load prior to an overload the ‘hot curve’ is applicable. Therefore during normal operation the relay will be operating between these two limits.

The following equation is used to calculate the trip time for a given current. Note that the relay will trip at a value corresponding to 100% of its thermal state.

The thermal time characteristic is given by:

$t = \tau \log_e (I_{eq}^2 - I_P^2)/(I_{eq}^2 - (\text{Thermal I>})^2$

Where:

t = Time to trip, following application of the overload current, I
τ = Heating time constant of the protected plant
I_{eq} = Equivalent current
Thermal I> = Relay setting current
I_P = Steady state pre-load current before application of the overload

The time to trip varies depending on the load current carried before application of the overload, i.e. whether the overload was applied from 'hot” or “cold”.

The thermal time constant characteristic may be rewritten as:

$\exp(-t/\tau) = (\theta - 1)/(\theta - \theta_p)$

$t = \tau \log_e (\theta - \theta_p) / (\theta - 1)$

Where:

θ = $I_{eq}^2/(\text{Thermal I>})^2$

and

θp = $I_p^2/(\text{Thermal I>})^2$

Where θ is the thermal state and is θ_p the pre-fault thermal state.

Note:	*The thermal model does not compensate for the effects of ambient temperature change.*

$t = \tau . \text{Loge} ((K^2-A^2)/(K^2-1))$

$t_{alarm} = \tau . \text{Loge} ((K^2-A^2)/(K^2-(\text{Thermal Alarm}/100))$

Where:

K = I_{eq}/Thermal I> (K2 = Thermal state, θ)

A = I_P/Thermal I> (A = Pre-fault thermal state, θ_p)

Thermal Alarm = Thermal alarm setting, 20-80%

The Thermal state of the machine can be viewed in the **Thermal Overload** cell in the **MEASUREMENTS 3** column. The thermal state can be reset by selecting **Yes** in the **Reset ThermalO/L** cell in **Measurements 3**. Alternatively the thermal state can be reset by energizing DDB 641 **Reset Gen Thermal** via the relay PSL.

A DDB signal **Gen Thermal Trip** is also available to indicate tripping of the element (DDB 945). A further DDB signal **Gen Thermal Alm** is generated from the thermal alarm stage (DDB 371). The state of the DDB signal can be programmed to be viewed in the **Monitor Bit x** cells of the **COMMISSION TESTS** column in the relay.

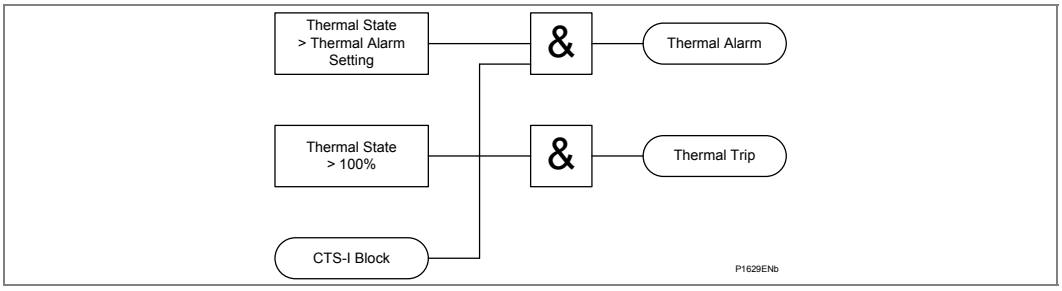

Figure 28 - Thermal overload protection logic diagram

The functional block diagram for the thermal overload protection is shown in Figure 28.

1.17 Circuit Breaker Fail Protection (50BF)

The circuit breaker failure protection incorporates two timers, **CB Fail 1 Timer** and **CB Fail 2 Timer**, allowing configuration for the following scenarios:

- Simple CBF, where only **CB Fail 1 Timer** is enabled. For any protection trip, the **CB Fail 1 Timer** is started, and normally reset when the circuit breaker opens to isolate the fault. If breaker opening is not detected, **CB Fail 1 Timer** times out and closes an output contact assigned to breaker fail (using the programmable scheme logic). This contact is used to backtrip upstream switchgear, generally tripping all infeeds connected to the same busbar section.
- A re-tripping scheme, plus delayed backtripping. Here, **CB Fail 1 Timer** is used to route a trip to a second trip circuit of the same circuit breaker. This requires duplicated circuit breaker trip coils, and is known as re-tripping. Should re-tripping fail to open the circuit breaker, a backtrip may be issued following an additional time delay. The backtrip uses **CB Fail 2 Timer**, which is also started at the instant of the initial protection element trip.
- CBF elements **CB Fail 1 Timer** and **CB Fail 2 Timer** can be configured to operate for trips triggered by protection elements within the relay or via an external protection trip. The latter is achieved by allocating one of the relay opto-isolated inputs **to External Trip** using the programmable scheme logic.
- Resetting of the CBF is possible from a breaker open indication (from the relay's pole dead logic) or from a protection reset. In these cases resetting is only allowed provided the undercurrent elements have also reset. The resetting options are summarized in Table 5:

Initiation (menu selectable)	CB fail timer reset mechanism
Current based protection (e.g. 50/51/46/21/87..)	The resetting mechanism is fixed. [IA< operates] & [IB< operates] & [IC< operates] & [IN< operates]
Sensitive earth fault element	The resetting mechanism is fixed. [ISEF< operates]
Non-current based protection (e.g. 27/59/81/32L..)	Three options are available. The user can select from the following options. [All I< and IN< elements operate] [Protection element reset] AND [All I< and IN< elements operate] CB open (all 3 poles) AND [All I< and IN< elements operate]
External protection	Three options are available. The user can select any or all of the options. [All I< and IN< elements operate] [External trip reset] AND [All I< and IN< elements operate] CB open (all 3 poles) AND [All I< and IN< elements operate]

Table 5 - CB fail timer reset mechanisms

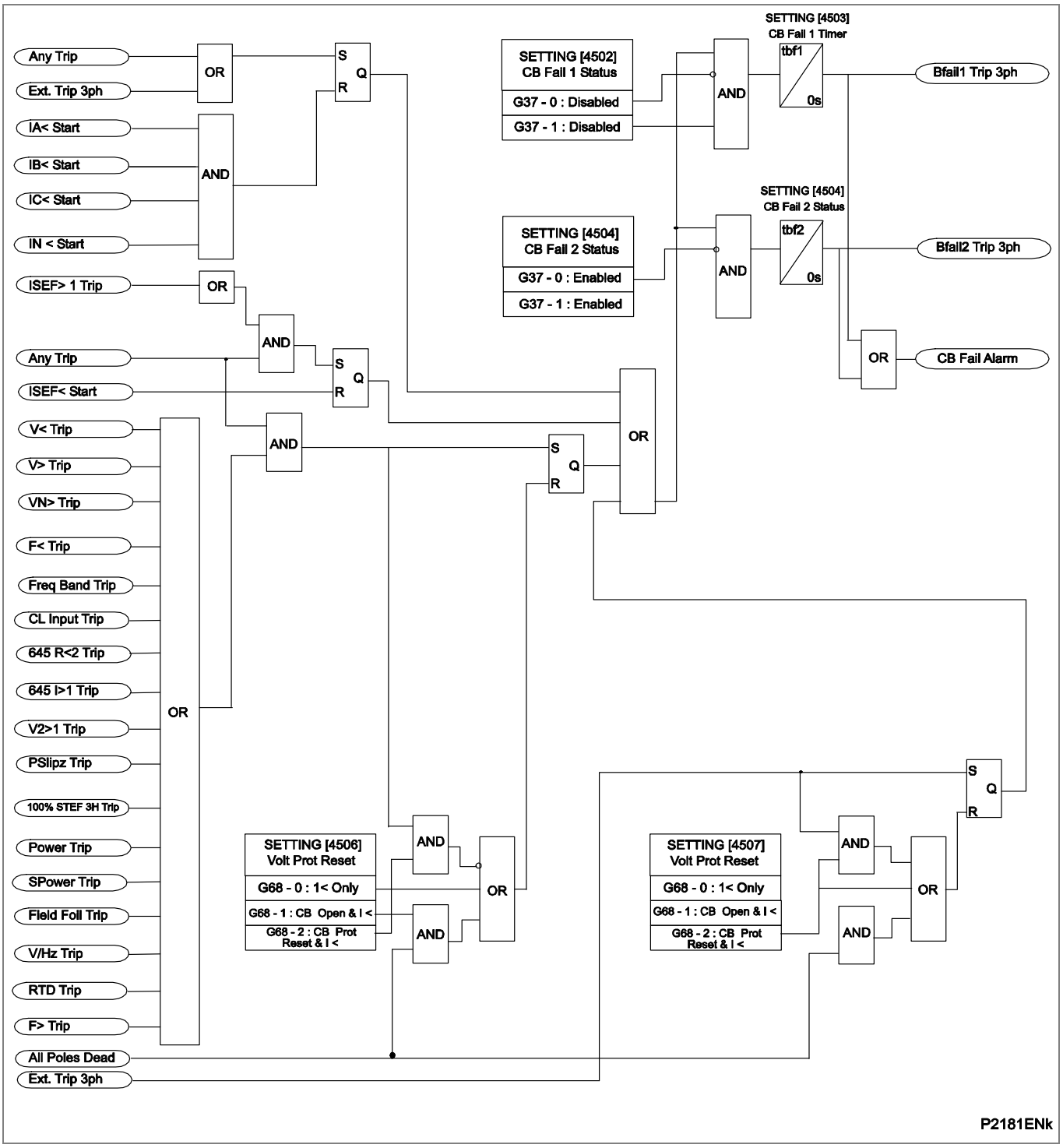

Figure 29 - CB fail logic

1.18 Current Loop Inputs and Outputs

1.18.1 Current Loop Inputs

Four analog (or current loop) inputs are provided for transducers with ranges of 0 - 1 mA, 0 - 10 mA, 0 - 20 mA or 4 - 20 mA. The analog inputs can be used for various transducers such as vibration monitors, tachometers and pressure transducers. Associated with each input there are two protection stages, one for alarm and one for trip. Each stage can be individually enabled or disabled and each stage has a definite time delay setting.

The Alarm and Trip stages can be set for operation when the input value falls below the Alarm/Trip threshold **Under** or when the input current is above the input value **Over**. The sample interval is nominally 50 ms per input.

The relationship between the transducer measuring range and the current input range is linear. The maximum and minimum settings correspond to the limits of the current input range. This relationship is shown in Figure 30.

Figure 30 also shows the relationship between the measured current and the analog to digital conversion (ADC) count. The hardware design allows for over-ranging, with the maximum ADC count (4095 for a 12-bit ADC) corresponding to 1.0836 mA for the 0 - 1 mA range, and 22.7556 mA for the 0 - 10 mA, 0 - 20 mA and 4 - 20 mA ranges. The relay will therefore continue to measure and display values beyond the Maximum setting, within its numbering capability (-9999 to 9999).

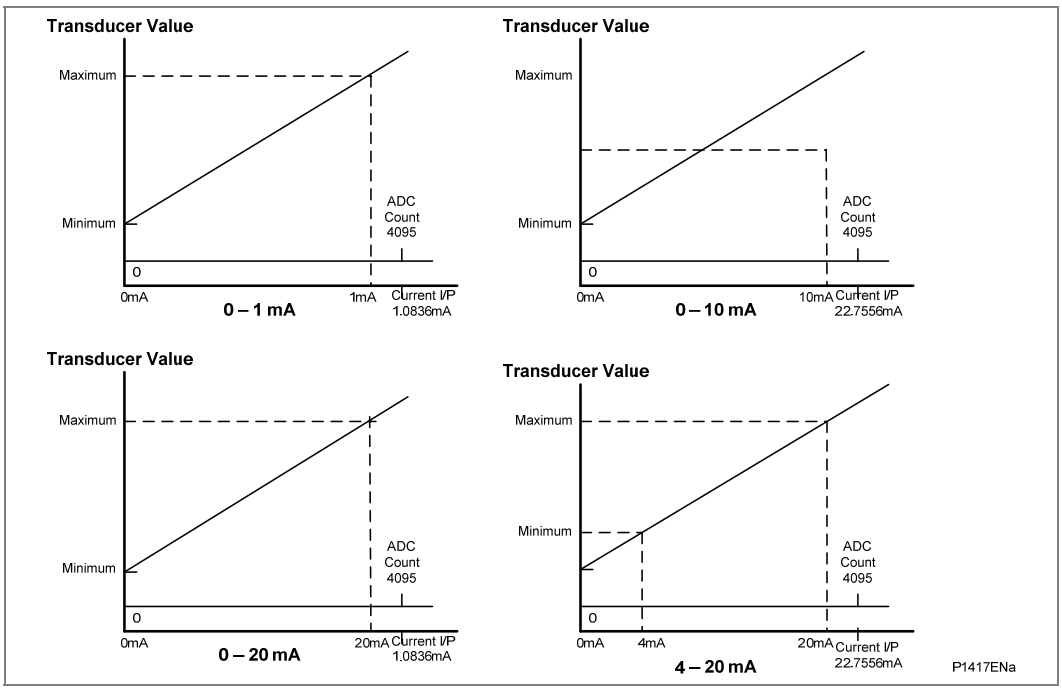

Figure 30 - Relationship between the transducer measuring quantity and the current input range

Note	*If the Maximum is set less than the Minimum, the slopes of the graphs will be negative. This is because the mathematical relationship remains the same irrespective of how Maximum and Minimum are set, e.g., for 0 - 1 mA range, Maximum always corresponds to 1 mA and Minimum corresponds to 0 mA.*

Power-on diagnostics and continuous self-checking are provided for the hardware associated with the current loop inputs. When a failure is detected, the protection associated with all the current loop inputs is disabled and a single alarm signal (CL Card I/P Fail, DDB 384) is set and an alarm (CL Card I/P Fail) is raised. A maintenance record with an error code is also recorded with additional details about the type of failure.

For the 4 - 20 mA input range, a current level below 4 mA indicates that there is a fault with the transducer or the wiring. An instantaneous under current alarm element is available, with a setting range from 0 to 4 mA. This element controls alarm output signals (CLI1/2/3/4 I< Fail Alm., DDB 390-393).

Hysteresis is implemented for each protection element. For **Over** protection, the drop-off/pick-up ratio is 95%, for **Under** protection, the ratio is 105%.

A timer block input is available for each current loop input stage which will reset the CLI timers of the relevant stage if energized, (DDB 656-659). If a current loop input is blocked the protection and alarm timer stages and the 4 - 20 mA undercurrent alarm associated with that input are blocked. The blocking signals may be useful for blocking the current loop inputs when the CB is open for example.

DDB signals are available to indicate starting an operation of the alarm and trip stages of the each current loop inputs, (CLI1/2/3/4 Alarm Start: DDB 1232-1235, CLI1/2/3/4 Trip Start: DDB 1236-1239, CL Input 1/2/3/4 Alarm: DDB 386-389, CLI Input1/2/3/4 Trip: DDB 987-990). The state of the DDB signals can be programmed to be viewed in the **Monitor Bit x** cells of the **COMMISSION TESTS** column in the relay.

The current loop input starts are mapped internally to the ANY START DDB signal – DDB 992.

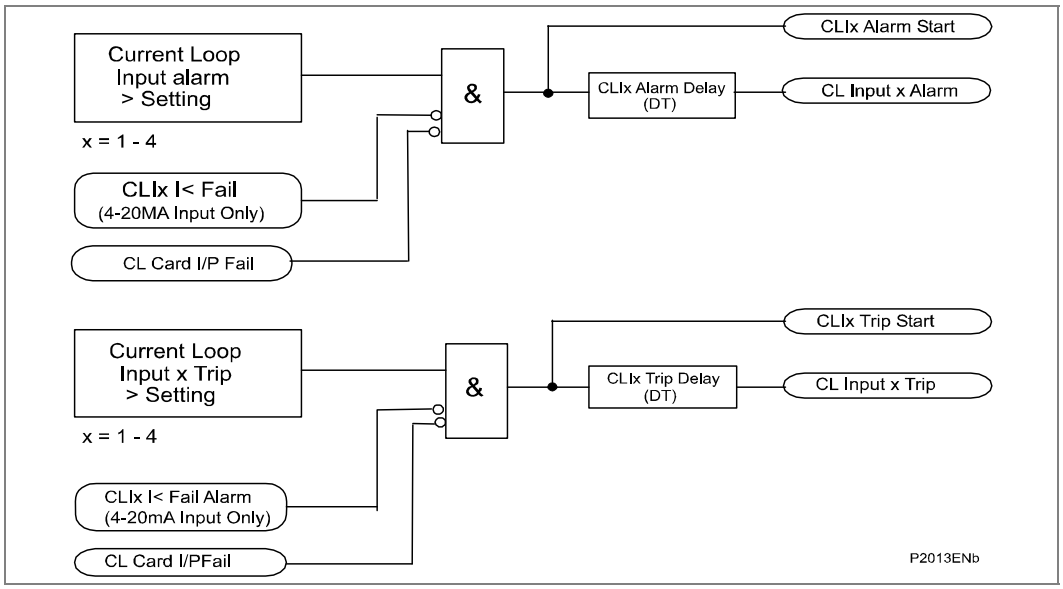

Figure 31 - Current loop input logic diagram

1.18.2 Current Loop Output

Four analog current outputs are provided with ranges of 0 - 1 mA, 0 - 10 mA, 0 - 20 mA or 4 - 20 mA which can alleviate the need for separate transducers. These may be used to feed standard moving coil ammeters for analog indication of certain measured quantities or into a SCADA using an existing analog RTU.

The CLIO output conversion task runs every 50 ms and the refresh interval for the output measurements is nominally 50 ms. The exceptions are marked with an asterisk in the table of current loop output parameters below. Those exceptional measurements are updated once every second.

The user can set the measuring range for each analog output. The range limits are defined by the Maximum and Minimum settings.

This allows the user to “zoom in” and monitor a restricted range of the measurements with the desired resolution. For voltage, current and power quantities, these settings can be set in either primary or secondary quantities, depending on the **CLO1/2/3/4 Set Values** - **Primary/Secondary** setting associated with each current loop output.

The output current of each analog output is linearly scaled to its range limits, as defined by the Maximum and Minimum settings. The relationship is shown in Figure 32.

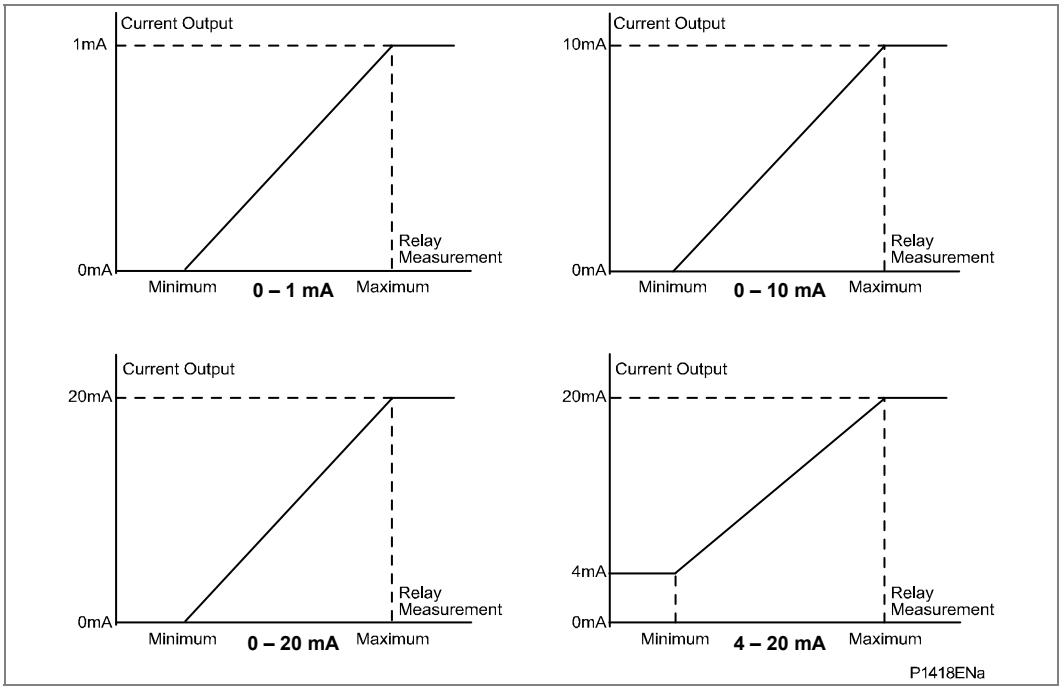

Figure 32 - Relationship between the current output and the relay measurement

Note	*If the Maximum is set less than the Minimum, the slopes of the graphs will be negative. This is because the mathematical relationship remains the same irrespective of how Maximum and Minimum are set, e.g., for 0 - 1 mA range, Maximum always corresponds to 1 mA and Minimum corresponds to 0 mA.*

The P341 transducers are of the current output type. This means that the correct value of output will be maintained over the load range specified. The range of load resistance varies a great deal, depending on the design and the value of output current. Transducers with a full scale output of 10 mA will normally feed any load up to a value of 1000 Ω (compliance voltage of 10 V). This equates to a cable length of 15 km (approximately) for lightweight cable (1/0.6 mm cable). A screened cable earthed at one end only is recommended to reduce interference on the output current signal. The table below gives typical cable impedances/km for common cables. The compliance voltage dictates the maximum load that can be fed by a transducer output. Therefore the 20 mA output will be restricted to a maximum load of 500 Ω approximately.

Cable	1/0.6 mm	1/0.85 mm	1/1.38 mm
CSA (mm^2)	0.28	0.57	1.50
R (Ω/km)	65.52	32.65	12.38

Table 6 - Cable resistances

The receiving equipment, whether it be a simple moving-coil (DC milli-ammeter) instrument or a remote terminal unit forming part of a SCADA system, can be connected

at any point in the output loop and additional equipment can be installed at a later date (provided the compliance voltage is not exceeded) without any need for adjustment of the transducer output.

Where the output current range is used for control purposes, it is sometimes worthwhile to fit appropriately rated diodes, or Zener diodes, across the terminals of each of the units in the series loop to guard against the possibility of their internal circuitry becoming open circuit. In this way, a faulty unit in the loop does not cause all the indications to disappear because the constant current nature of the transducer output simply raises the voltage and continues to force the correct output signal round the loop.

Power-on diagnostics and continuous self-checking are provided for the hardware associated with the current loop outputs. When failure is detected, all the current loop output functions are disabled and a single alarm signal (CL Card O/P Fail, DDB 385) is set and an alarm (CL Card O/P Fail) is raised. A maintenance record with an error code is also recorded with additional details about the type of failure.

Current loop output parameters are shown in this table:

Current loop output parameter	Abbreviation	Units	Range	Step	Default min.	Default max.
Current Magnitude	IA Magnitude IB Magnitude IC Magnitude IN Derived Mag.	A	0 to 16 A	0.01 A	0 A	1.2 A
Sensitive Current Input Magnitude	I Sen Magnitude	A	0 to 2 A	0.01 A	0 A	1.2 A
Phase Sequence Current Components	I1 Magnitude I2 Magnitude I0 Magnitude	A	0 to 16 A	0.01 A	0 A	1.2 A
RMS Phase Currents	IA RMS* IB RMS* IC RMS*	A	0 to 16 A	0.01 A	0 A	1.2 A
P-P Voltage Magnitude	VAB Magnitude VBC Magnitude VCA Magnitude	V	0 to 200 V	0.1 V	0 V	140 V
P-N voltage Magnitude	VAN Magnitude VBN Magnitude VCN Magnitude	V	0 to 200 V	0.1 V	0 V	80 V
Neutral Voltage Magnitude	VN1 Measured Mag. VN Derived Mag.	V	0 to 200 V	0.1 V	0 V	80 V
Phase Sequence Voltage Components	V1 Magnitude* V2 Magnitude V0 Magnitude	V	0 to 200 V	0.1 V	0 V	80 V
RMS Phase Voltages	VAN RMS* VBN RMS* VCN RMS*	V	0 to 200 V	0.1 V	0 V	80 V
Frequency	Frequency	Hz	0 to 70 Hz	0.01 Hz	45 Hz	65 Hz
3 Ph Active Power	Three-Phase Watts*	W	-6000 W to 6000 W	1 W	0 W	300 W
3 Ph Reactive Power	Three-Phase Vars*	Var	-6000 Var to 6000 Var	1 Var	0 Var	300 Var
3 Ph Apparent Power	Three-Phase VA*	VA	0 to 6000VA	1 VA	0 VA	300 VA
3 Ph Power Factor	3Ph Power Factor*	-	-1 to 1	0.01	0	1

Current loop output parameter	Abbreviation	Units	Range	Step	Default min.	Default max.
Single-Phase Active Power	A Phase Watts* B Phase Watts* C Phase Watts*	W	-2000 W to 2000 W	1 W	0 W	100 W
Single-Phase Reactive Power	A Phase Vars* B Phase Vars* C Phase Vars*	Var	-2000 Var to 2000 Var	1 Var	0 Var	100 Var
Single-Phase Apparent Power	A Phase VA* B Phase VA* C Phase VA*	VA	0 to 2000 VA	1 VA	0 VA	100 VA
Single-Phase Power Factor	APh Power Factor* BPh Power Factor* CPh Power Factor*		-1 to 1	0.01	0	1
Three-Phase Current Demands	IA Fixed Demand* IB Fixed Demand* IC Fixed Demand* IA Roll Demand* IB Roll Demand* IC Roll Demand* IA Peak Demand* IB Peak Demand* IC Peak Demand*	A	0 to 16 A	0.01 A	0 A	1.2 A
3Ph Active Power Demands	3Ph W Fix Demand* 3Ph W Roll Dem* 3Ph W Peak Dem*	W	-6000 W to 6000 W	1 W	0 W	300 W
3Ph Reactive Power Demands	3Ph Vars Fix Dem* 3Ph Var Roll Dem* 3Ph Var Peak Dem*	Var	-6000 Var to 6000 Var	1 Var	0 Var	300 Var
Stator Thermal State	Thermal Overload	%	0 to 200	0.01	0	120
Current Loop Inputs	CL Input 1 CL Input 2 CL Input 3 CL input 4	-	-9999 to 9999	0.1	0	9999
DLR	DLR Amapacity Max Iac	A	0 to 16 A	0.01 A	0 A	1.2 A
df/dt	df/dt	Hz/s	-10 to 10 Hz/s	0.01 Hz/s	-1 Hz/s	1 Hz/s
Check Synch Voltages	C/S Voltage Mag C/S Bus Gen-Mag	V	0 to 200 V	0.1 V	0 V	80 V
Slip Frequency	Slip frequency	Hz	0 to 70 Hz	0.01 Hz	-0.5 Hz	0.5 Hz

Table 7 - Current loop output parameters

Note 1	*For measurements marked with an asterisk, the internal refresh rate is nominally 1 s, others are 0.5 power system cycle or less.*
Note 2	*The polarity of Watts, Vars and power factor is affected by the Measurements Mode setting.*
Note 3	*These settings are for nominal 1 A and 100/120 V versions only. For other nominal versions they need to be multiplied accordingly.*

1.19 Dynamic Line Rating (DLR) Protection (49DLR)

The thermal rating, also referred to as ampacity, of an overhead line is the maximum current that a circuit can carry without exceeding its sag temperature or the annealing onset temperature of the conductor, whichever is lower. The sag temperature is that temperature at which the legislated height of the phase conductor above ground is met. The present practice in many utilities is to monitor the power flow in overhead lines without knowledge of the actual conductor temperature or the height of the conductor above ground. There are many variables affecting the conductor temperature, such as wind speed and direction, ambient temperature and solar radiation. As these are difficult to predict, conservative assumptions have been made so far in order to always ensure public safety. The main purpose of real time line monitoring is to achieve a better utilization of the load current capacity of overhead lines whilst ensuring that the regulatory clearances above ground are always met. Different real time line monitoring methods have been applied and evaluated as described in various publications. There are fundamentally two different ways to derive ampacity dynamically. One is by direct measurement using sensors to determine the tension, conductor temperature, or sag. Alternatively, an indirect method can be used, by measuring ambient weather conditions, from which the ampacity can be calculated by solving standard equations in real time which is implemented in the P341.

In the P341 DLR weather stations are employed to derive ampacity for use in the load management and back-up protection systems. Various computational methods have been developed in the past to calculate the heat transfer and ampacities of the conductors. Engineering Recommendation P27 which is based on Price's experimental work and statistical method has been applied commonly in the UK to calculate fixed line ratings for winter or summer. The ER P27 current ratings are based on the following weather conditions: wind speed 0.5 m/s, ambient temperature winter 2°C, ambient temperature summer 20°C and solar radiation 0 W. The two most commonly used international standards are the CIGRE 207 standard and the IEEE 738 standard for the current-temperature relationship of the line. Both the CIGRE 207 standard and the IEEE 738 algorithms are implemented in the P341 Dynamic Line Rating protection to derive the ampacity from the weather measurements.

In the DLR protection in the P341 relay the ampacity is calculated in real time using the CIGRE 207 or IEEE 738 equations. When the measured line current reaches a certain percentage of dynamically calculated ampacity one of the 6 protection stages can be operated after a time delay. These stages can be used to provide control commands to the distributed generators to hold or reduce their power output. If the control actions are not successful at reducing the ampacity, possibly due to a communications failure, as a back-up the protection relay can use one of protection stages to trip out the distributed generation after a time delay.

1.19.1 CIGRE/IEEE Heat Balance Equation

The current-temperature relationship of the bare overhead conductors is described below.

The conductor surface temperature is a function of:

4. Conductor material properties
5. Weather conditions
6. Conductor geographical position
7. Conductor electrical current

Based on the above parameters, the temperature of the line conductor can be dynamically calculated using the differential heat-balance equation which is used by CIGRE 207 and IEEE 738 standards:

Equation 1
$$m \cdot c \cdot {dT_c}/{dt} = P_J + P_M + P_i + P_S - P_C - P_R - P_w$$

Where:
m = Conductor mass density per unit length (kg/m)
c = Conductor specific heat capacity (J/kg·K)
T_c = Conductor temperature (oC)
P_J = Joule Heating per unit length (W/m)
P_M = Magnetic heating per unit length (W/m)
P_S = Solar Heating per unit length (W/m)
P_i = Corona heating per unit length (W/m)
P_C = Convective cooling per unit length (W/m)
P_R = Radiative cooling per unit length (W/m)
P_w = evaporative cooling per unit length (W/m)

P_i and P_w are commonly neglected and for the Lynx conductor for example PM can be neglected because the two layers of Aluminum strand spiral in opposite directions around the steel core, and the magnetic fields largely cancel out. Pi, Pw and PM are not considered in the P341 DLR calculations.

Equation 1 is related to the electrical current and the conductor temperature and it is used to calculate the conductor's temperature when the conductor's electrical current is known and to calculate the current that yields a given maximum allowable conductor temperature, the ampacity.

While calculating the line ampacity, the conductor temperature Tc can be considered as the maximum allowable temperature under steady state conditions, so dTc/dt = 0 as shown in Equation 2. The line's rating Iac can then be calculated by re-arranging Equation 1 to form the heat balance equation and substituting for PJ from Equation 10 for CIGRE and Equation 18 for IEEE. The IEEE standard uses ac current to calculate Joule heating, however the CIGRE standard uses dc current which has to be converted to an ac current as shown in Equation 11.

Equation 2
$$\begin{cases} {dT_c}/{dt} = 0 \\ T_c = T_{c\_\max} \end{cases}$$

Equation 3
$$\begin{cases} P_J = P_C + P_R - P_S \\ P_J = I_{dc}^2 \cdot R_{dc} \cdot \left[1 + \alpha \cdot (T_c - 20)\right] \text{CIGRE} \\ P_J = I_{ac}^2 \cdot R(T_c) \ IEEE \end{cases}$$

The steady state heat balance equation (heat gain = heat loss) is given in Equation 4:

Equation 4 PJ + PM +PS +Pi = PC +Pr +Pw

1.19.2 CIGRE 207 Equations

1.19.2.1 Convective Cooling – P_C

CIGRE considers the convective cooling by natural convective and corrected convection for low wind-speed scenarios and forced convective for high wind-speed scenarios as shown below:

1. Natural convective cooling (Wind-speed < 0.5 m/s)

Equation 5

$$P_{C\_natr} = \pi \cdot \lambda \cdot (T_c - T_a) \times A_2 \cdot [D^3 \cdot (T_c - T_a) \cdot g / (T_f + 273) / \upsilon^2 \times c \cdot \mu / \lambda)]^{m_2}$$

2. Forced convective cooling (All Wind speeds)

Equation 6

$$P_{C\_\delta} = \pi \cdot \lambda \cdot (T_c - T_a) \times B_1 \cdot (\rho_r \cdot V \cdot D / \upsilon)^n \cdot [A_1 + B_2 \cdot (\sin \delta)^{m_1}]$$

3. Corrected convective cooling (Wind-speed < 0.5 m/s)

Equation 7 $$P_{C\_cor} = \pi \cdot \lambda \cdot (T_c - T_a) \times 0.55 \cdot B_1 \cdot (\rho_r \cdot V \cdot D / \upsilon)^n$$

Where:

T_a = Ambient temperature (°C)

T_f = Film temperature at surface of conductor = 0.5(T_a + T_c) (°C)

λ = Thermal conductivity of air (W/m·K)

λ =2.42.10-2+7.2.10-5.Tf

g = Gravitational acceleration, constant 9.807 m/s^2

Pr = Prandtl number (unitless)

Pr = 0.715-2.5.10-^{4}.Tf

ρr = Relative air density (unitless)

ρr = exp(-1.16.10-^{4}y), y is the height above the sea level.

V = Wind velocity (m/s)

υ = Kinematic viscosity (m^2/s)

υ =1.32.10-^{5}+9.5.10-^{8}.Tf

δ = Effective angle between wind and conductor line (°)

δ = (wind direction-line direction)

D = Overall conductor diameter (m)

A_1, A_2, B_1, B_2, m_1, m_2 are the values determined by the intermediate calculated parameters.

The maximum value of the calculated convective cooling is used in the relay.

A_1, A_2, B_1, B_2, m_1, m_2 are the values determined by the intermediate calculated parameters.

A_1=0.42, B_2=0.68 and m_1=1.08 for 0º<δ<24º

A_1=0.42, B_2=0.58 and m_1=0.90 for 24º<δ<90º

A_2=0.850, m_2=0.188 for $[D^3 \cdot (T_c - T_a) \cdot g / (T_f + 273) / \upsilon^2 \times \mathrm{Pr})]^{m_2} < 10^4$

A_2=0.480, m_2=0.250 for $[D^3 \cdot (T_c - T_a) \cdot g / (T_f + 273) / \upsilon^2 \times \mathrm{Pr})]^{m_2} < 10^4$

B_1=0.641, n=0.471 for $\rho_r \cdot V \cdot D / \upsilon \leq 2.65 \cdot 10^3$

B_1=0.178, n=0.633 for $\rho_r \cdot V \cdot D / \upsilon > 2.65 \cdot 10^3 \;\; AND \;\; R_f \leq 0.05$

B1=0.048, n=0.800 for $\rho_r \cdot V \cdot D / \upsilon > 2.65 \cdot 10^3 \;\; AND \;\; R_f > 0.05$

R_f = Roughness of conductor surface (unitless)

$R_f = d / [2 \cdot (D - d)]$, and

d = Outer layer (non-ferrous material for steel reinforced conductors) wire diameter (m)

P_C = MAX (P_{C_natr}, P_{C_δ}, P_{C_cor})

The convective cooling mainly depends on V (wind velocity) and δ (effective wind angle).

1.19.2.2 Radiative Cooling – P_R

CIGRE calculates the radiative cooling as below:

Equation 8 $$P_R = \pi \cdot D \cdot \varepsilon \cdot \sigma_B \cdot \left[(T_c + 273)^4 - (T_a + 273)^4 \right]$$

Where:

ε = Emissivity (unitless)

σ_B = Stefan-Boltzmann constant = $5.670400 \cdot 10^{-8}$ $W/m^2 \cdot K^4$

D = Overall conductor diameter (m)

The radiative cooling mainly depends on the difference between the T_c^4 (conductor temperature) and T_a^4 (ambient temperature).

1.19.2.3 Basic Solar Heating – P_S

The solar heating calculation is simplified and calculated by considering the Global Solar Radiation as a constant for a long period of time.

Equation 9 $$P_S = \alpha_s \cdot S \cdot D$$

Where:

α_s = Solar absorptivity (unitless)

S = Global solar radiation (W/m^2)

D = Overall conductor diameter (m)

The solar heating mainly depends on S (solar radiation) and D (conductor diameter).

1.19.2.4 Joule Heating – P_J

CIGRE includes the magnetic heating into the Joule heating by considering a coefficient factor for the skin effect.

Equation 10 $$P_J = I_{dc}^{\;2} \cdot R_{dc} \cdot [1 + \alpha \cdot (T_c - 20)]$$

Where:

I_{dc} = DC current of conductor line (A)

I_{dc} is calculated based on the Equation 12, for an example of Lynx conductor.

R_{dc} = DC conductor resistance at 20°C per unit length (Ω/m)

T_c = Conductor temperature (°C)

= Temperature coefficient of resistance per degree Kelvin (1/K)

$$\alpha = \frac{\alpha_a \alpha_s \left(\frac{\rho_a}{A_s} + \frac{\rho_s}{A_a} \right) + \alpha_a \left(\frac{\rho_s}{A_s} \right) + \alpha_s \left(\frac{\rho_a}{A_a} \right)}{\frac{\rho_a}{A_a} + \frac{\rho_s}{A_s} + \alpha_a \left(\frac{\rho_a}{A_a} \right) + \alpha_s \left(\frac{\rho_s}{A_s} \right)}$$

α_a = Temperature coefficient of resistance of non-ferrous material for steel reinforced conductors (1/K)
α_s = Temperature coefficient of resistance of steel for steel reinforced conductors (1/K)
ρ_a = Resistivity of non-ferrous material for steel reinforced conductors (Ω/m)
ρ_s = Resistivity of steel for steel reinforced conductors (Ω/m)
A_a = Area of non-ferrous material for steel reinforced conductors (m^2)
A_s = Area of steel for steel reinforced conductors (m^2)
The joule heating mainly depends on I_{dc} (DC current) and T_c (conductor temperature).

1.19.2.5 CIGRE Ampacity Calculation

This section briefly describes the algorithm for calculating the line ampacity.

From Equation 3 and Equation 10, the line's rating I_{dc} can be calculated as shown in Equation 11.

Equation 11
$$Idc = \left(\frac{P_C + P_R - P_S}{R_{dc} \cdot [1 + \alpha \cdot (T_c - 20)]} \right)^{1/2}$$

CIGRE converts the DC current to an AC current based on an empirical formula which takes into account the skin effect and the construction of the conductor. The ampacity I_{ac} for Lynx conductor for example is shown below. Other empirical formulae for other conductor types are stored in the relay.

Equation 12
$$I_{ac} = I_{dc} / \sqrt{1.0045 + 0.09 \cdot 10^{-6} I_{dc}}$$

1.19.3 IEEE 738 Equations

The IEEE equations for dynamic line rating protection are described below.

1.19.3.1 Convective Cooling – P_C

IEEE considers the convective cooling by natural convection for low wind-speed scenarios and high wind-speed scenarios.

Natural convective cooling (Wind-speed < 0.5 m/s)

Equation 13
$$P_{C\_natr} = 3.6461 \cdot \rho_f^{0.5} \cdot D^{0.75} \cdot (T_c - T_a)^{1.25}$$

Low wind-speed cooling (All Wind speed)

Equation 14
$$P_{C\_low} = \left[1.01 + 1.3507 \cdot \left(\frac{D \cdot \rho_f \cdot V}{\mu_f} \right)^{0.52} \right] \cdot \kappa_f \cdot (T_c - T_a)$$

High wind-speed cooling (Wind-speed < 0.5 m/s)

$$P_{C\_high} = \left[0.7528 \cdot \left(\frac{D \cdot \rho_f \cdot V}{\mu_f} \right)^{0.6} \right] \cdot \kappa_f \cdot (T_c - T_a)$$

Equation 15

Where:

ρf = Air density (kg/ m3)
μf = Absolute viscosity of air (kg/m·hr)
κf = Thermal conductivity of air (W/m·K)
D = Overall conductor diameter (m)

Temperature T_{film}	Dynamic discosity μ_f	Air density $\rho_{f\ (kg/m^3)}$				Thermal conductivity of air k_f
ºC	(Pa.s)	0 m	1000 m	2000 m	4000 m	W/(m ºC)
0	0.0000172	1.293	1.147	1.014	0.785	0.0242
5	0.0000174	1.270	1.126	0.995	0.771	0.0246
10	0.0000176	1.247	1.106	0.978	0.757	0.0250
15	0.0000179	1.226	1.087	0.961	0.744	0.0254
20	0.0000181	1.205	1.068	0.944	0.731	0.0257
25	0.0000184	1.184	1.051	0.928	0.719	0.0261
30	0.0000186	1.165	1.033	0.913	0.707	0.0265
35	0.0000188	1.146	1.016	0.898	0.696	0.0269
40	0.0000191	1.127	1.000	0.884	0.685	0.0272
45	0.0000193	1.110	0.984	0.870	0.674	0.0276
50	0.0000195	1.093	0.969	0.856	0.663	0.0280
55	0.0000198	1.076	0.954	0.843	0.653	0.0283
60	0.0000200	1.060	0.940	0.831	0.643	0.0287
65	0.0000202	1.044	0.926	0.818	0.634	0.0291
70	0.0000204	1.029	0.912	0.806	0.625	0.0295
75	0.0000207	1.014	0.899	0.795	0.616	0.0298
80	0.0000209	1.000	0.887	0.783	0.607	0.0302
85	0.0000211	0.986	0.874	0.773	0.598	0.0306
90	0.0000213	0.972	0.862	0.762	0.590	0.0309
95	0.0000215	0.959	0.850	0.752	0.582	0.0313
100	0.0000217	0.946	0.839	0.741	0.574	0.0317

Table 8 - Viscosity, density, and thermal conductivity of air

The maximum value of the calculated convective cooling is used in the relay algorithm.

P_C = MAX (P_{C_natr}, P_{C_low}, P_{C_high})·k_{angle}

1.19.3.2 Radiative Cooling – P_R

IEEEE calculates the radiative cooling as shown below:

$$P_R = 17.8248 \cdot D \cdot \varepsilon \cdot \left[\left(\frac{T_c + 273}{100} \right)^4 - \left(\frac{T_a + 273}{100} \right)^4 \right]$$

Equation 16

Where:

ε = Emissivity (unitless)
D = Overall conductor diameter (m)

1.19.3.3 Solar Heating – P_S

IEEE considers the atmospheric conditions that instantly influence the direct solar radiation. IEEE calculates the solar heating as below:

Equation 17 $$P_S = \alpha_s \cdot \Phi_s \cdot \sin(\theta) \cdot A$$

Where:

αs = Solar absorptivity (unitless)
Φs = Total solar and sky radiated heat flux (W/m^2)
θ = Effective angle of incidence of the sun's rays (°)
A = Projected area of the conductor (m^2 per lineal meter)
D = Overall conductor diameter (m)

The real-time solar calculation, Φs. Sin (θ), depends on the date and time of the year and also the line conductor latitude and longitude and thus is currently not implemented in the P341.

In the P341 solar heating is implemented in a similar way to the CIGRE standard as shown below:

$$P_S = \alpha_s \cdot S \cdot A$$

S = Global solar radiation (W/m2)

1.19.3.4 Joule Heating – P_J

IEEE uses AC current to calculate the Joule heating and calculates the resistance of the line conductor by interpolation.

Equation 18 $$P_J = I_{ac}{}^2 \cdot R(T_c)$$

Where:

I_{ac} = Conductor AC current (A)
T_c = Conductor temperature (°C)
$R(T_c)$ = AC resistance at T_c per unit length (Ω/m)

1.19.3.5 IEEE Ampacity Calculation

This section briefly describes the algorithm for calculating the line ampacity.

From Equation 3 and Equation 18, the line's rating, Iac, can be calculated as shown in Equation 19.

Equation 19 $$Iac = \left(\frac{P_C + P_R - P_S}{R \cdot (T_c)} \right)^{1/2}$$

1.19.4 Conductor Temperature

Conductor temperature, including steady state conductor temperature and dynamic conductor temperature, can be calculated by resolving Equation 1 as shown below in Equation 20. This is applicable for IEEE and CIGRE standards where the different values of PJ, PS, PC and PR from the 2 standards are substituted into Equation 20.

Equation 20

$$T_c(t + \Delta t) = T_c(t) + \frac{1}{mc} \cdot (P_J + P_S - P_C - P_R) \cdot \Delta t$$

Where:

Tc(t)	=	Conductor temperature at the specific time t (°C)
Tc(t+Δt)	=	Conductor temperature after a short time Δt from t (°C)

The steady state conductor temperature can be considered as the final state conductor temperature, which can be calculated by assuming all of the conditions, e.g. the environmental parameters and current flow, remain stable (considering the heat is balanced as $P_J+P_S-P_C-P_R = 0$).

The dynamic conductor temperature is the real-time conductor temperature, which can be calculated by assuming that the calculation time interval (Δt) is relatively short, say, less than one twentieth of the thermal time constant.

Although the calculation methods are different for calculating steady state and dynamic conductor temperature, a simple concept can be used to distinguish them using Δt. Δt is infinite time for calculating the steady state conductor temperature, but is a relatively small value for calculating dynamic conductor temperature.

1.19.5 Protection Relay Operation

The dynamic line rating protection is included as an additional function to the existing protection functions of the P341 in version 7x software.

The current loop interface (0-1 mA, 0 -10 mA, 0-20 mA or 4-20 mA) is an analogue electrical transmission standard for instruments and transducers, therefore, it is the most suitable form of communications between the weather station sensors and the relay. Thus, the relay does not need to implement specific communication protocols for different weather stations. The relay allows the user to select the type and the current loop input channels to be used for the ambient temperature, wind velocity, wind direction and the solar radiation sensor inputs, see Figure 34. The user can also define the range of the physical quantities measured by the sensors, so that the current loop measurements can be interpreted correctly by the relay. An averaging function can optionally be applied to each of the meteorological measurements - wind speed, wind angle, ambient temperature and solar radiation which can vary over a period of time. The results are fed into the algorithm which implements the dynamic line rating calculations. Three phase currents are also measured and the maximum phase current magnitude is selected for the alarm and tripping criteria. User-defined hysteresis (pick-up / drop-off ratio) is available to ensure correct operation even in the presence of fluctuating currents. The current magnitudes, together with the sensor measurements are available from the relay as measuring quantities in the **MEASUREMENTS 4** menu. They can be accessed either locally through the front panel, or remotely using one of the relay's remote communication ports. Other derived values, in particular, the calculated line ampacity and stead state and dynamic conductor temperatures are also available to be accessed in the **MEASUREMENTS 4** menu.

There are a total of 6 DLR protection stages, all of which have their own setting level as a percentage of the line ampacity and time delay settings. These 6 stages can be used to provide alarms, controls or tripping signals. DDB Signals are available to indicate the start and trip of each stage (DLR I>1/2/3/4/5/6 Start: DDB 1206-1211, DLR I>1/2/3/4/5/6 Trip: DDB 952-957). There is also an inhibit input for each protection element and for all elements, which can be used to inhibit the DLR operation (DLR I>1/2/3/4/5/6 Inhibit, DLR Scheme Inh: DDB 642-648). For the 4-20 mA inputs a current level below 4 mA indicates that there is a fault with the transducer or the wiring. An instantaneous under current alarm element is available with a setting range 0-4 mA which controls a number of alarm signals (Amb T Fail Alm, Wind V Fail Alm, Wind D Fail Alm, Solar R Fail Alm, DDB 396-399).

The state of the DDB signals can be programmed to be viewed in the **Monitor Bit x** cells of the **COMMISSION TESTS** column in the relay. The protection starts for each element are mapped internally to the ANY START DDB signal – DDB992.

In configuring the relay, apart from setting the trip thresholds and time delays, it is also necessary to enter a range of conductor data parameters, which are required for the heating and cooling calculations (PJ, PC, Pr and PS). To assist the user, the relay stores the relevant parameters of 36 types of British conductors and a custom conductor type can also be defined.

There are six protection stages with pre-indicating start signals for DLR protection. The operation of each stage can be explained as follows,

$I_{operate}$ = max (Ia, Ib, Ic)
Pickup criteria: $I_{operate} / I_{ac} \geq$ threshold (%)
Drop-off criteria: $I_{operate} / I_{ac} <$ threshold (%) * Drop-off Ratio
Where,

$I_{operate}$ is the operating quantity for the protection
I_{ac} is the calculated dynamic line rating

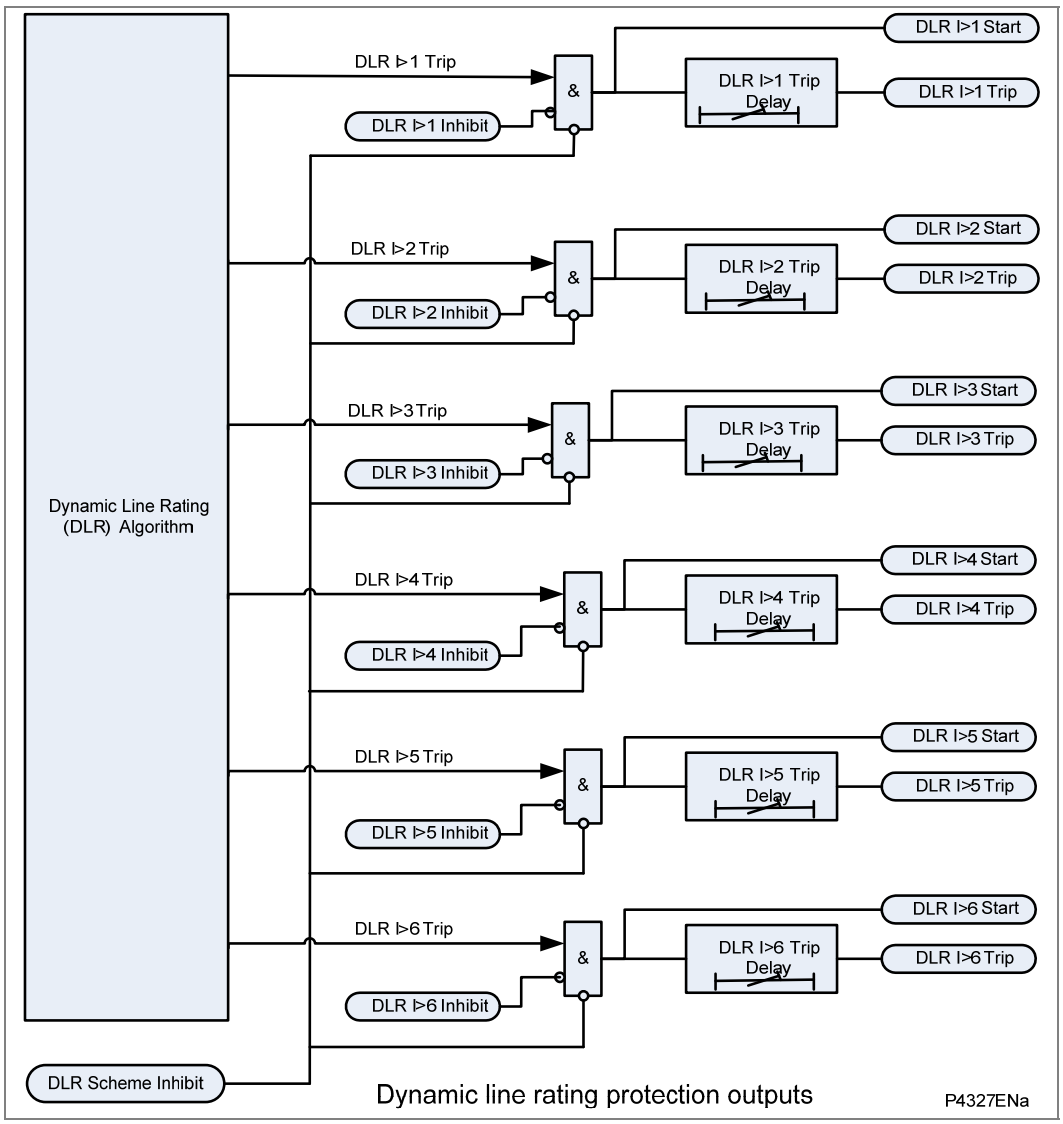

Figure 33 - Dynamic line rating protection outputs for 6 stages

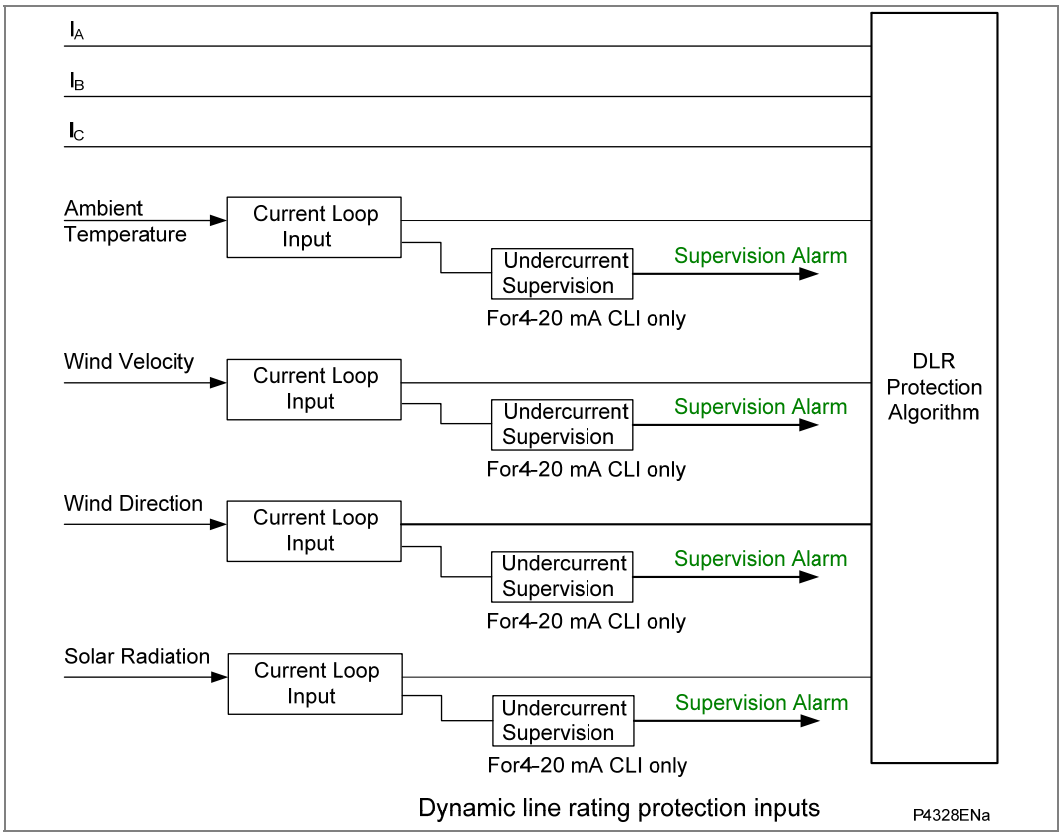

Figure 34 - Dynamic line rating protection inputs

2 OPERATION OF NON-PROTECTION FUNCTIONS

2.1 Check Synchronism (25)

2.1.1 Overview

In most situations it is possible for both the **Generator** and **Bus** sides of a circuit breaker to be live when the circuit breaker is open, for example where the Bus has a power source. Therefore when closing the circuit breaker, it is normally necessary to check that the network conditions on both sides are suitable, before giving a CB Close command. This applies to manual circuit breaker closing of any CB and auto-reclosure applications specific to feeder CBs. If a circuit breaker is closed when the generator and bus voltages are both live, with a large phase angle, frequency or magnitude difference between them, the system could be subjected to an unacceptable shock, resulting in loss of stability, and possible damage to connected machines.

System checks involve monitoring the voltages on both sides of a circuit breaker, and, if both sides are live, performing a synchronism check to determine whether the phase angle, frequency and voltage magnitude differences between the voltage vectors, are within permitted limits.

The pre-closing system conditions for a given circuit breaker depend on the system configuration and, for auto-reclosing, on the selected auto-reclose program. For example, on a feeder with delayed auto-reclosing, the circuit breakers at the two line ends are normally arranged to close at different times. The first line end to close usually has a live bus and a dead line immediately before reclosing, and charges the line (dead line charge) when the circuit breaker closes. The second line end circuit breaker sees live bus and live line after the first circuit breaker has re-closed. If there is a parallel connection between the ends of the tripped feeder, they are unlikely to go out of synchronism, i.e. the frequencies will be the same, but the increased impedance could cause the phase angle between the two voltages to increase. Therefore the second circuit breaker to close might need a synchronism check, to ensure that the phase angle has not increased to a level that would cause an unacceptable shock to the system when the circuit breaker closes.

If there are no parallel interconnections between the ends of the tripped feeder, the two systems could lose synchronism, and the frequency at one end could slip relative to the other end. In this situation, the second line end would require a synchronism check comprising both phase angle and slip frequency checks.

If the second line end busbar has no power source other than the feeder that has tripped; the circuit breaker will see a live line and dead bus assuming the first circuit breaker has re-closed. When the second line end circuit breaker closes the bus will charge from the live line (dead bus charge).

For generator applications before closing the CB the frequency and voltage from the machine is varied automatically or manually until the generator voltage is in synchronism with the power system voltage. A check synchronizing relay is used to check the generator voltage is in synchronism with the system voltage in terms of voltage magnitude, voltage difference, phase angle and slip frequency before the generator CB is allowed to close.

2.1.2 VT Selection

The P34x has a three-phase **Main VT** input and a single-phase **Check Sync VT** input. Depending on the primary system arrangement, the main three-phase VT for the relay may be located on either the busbar side or the generator side of the circuit breaker, with the check sync. VT being located on the other side. Hence, the relay has to be programmed with the location of the main VT. This is done via the **Main VT Location - Gen/Bus** setting in the **SYSTEM CONFIG** menu. This is required for the voltage monitors to correctly define the Live Gen/Dead Gen and Live Bus/Dead Bus DDBs.

The Check Sync. VT may be connected to either a phase to phase or phase to neutral voltage, and for correct synchronism check operation, the relay has to be programmed with the required connection. The **C/S Input** setting in the **CT & VT RATIOS** menu should be set to **A-N**, **B-N**, **C-N**, **A-B**, **B-C** or **C-A** as appropriate.

The P341 (40TE case) uses the neutral voltage input, VNeutral, for the Check Synch VT and so the user can not use check synch and measured neutral voltage (59N) protection (VN>3, VN>4) at the same time. The derived neutral voltage protection (VN>1, VN>2) from the 3 phase voltage input can still be used with the check synchronizing function.

The P341 (60TE case) uses a dedicated V Check Sync voltage input for the Check Synch VT and so there are no restrictions in using the check synchronizing function and other protection functions in the relay.

2.1.3 Basic Functionality

System check logic is collectively enabled or disabled as required, by setting **System Checks** in the **CONFIGURATION** menu. The associated settings are available in **SYSTEM CHECKS**, sub-menus **VOLTAGE MONITORS**, **CHECK SYNC** and **SYSTEM SPLIT**. If **System Checks** is selected to **Disabled**, the associated **SYSTEM CHECKS** menu becomes invisible, and a **Sys checks inactive** DDB signal is set.

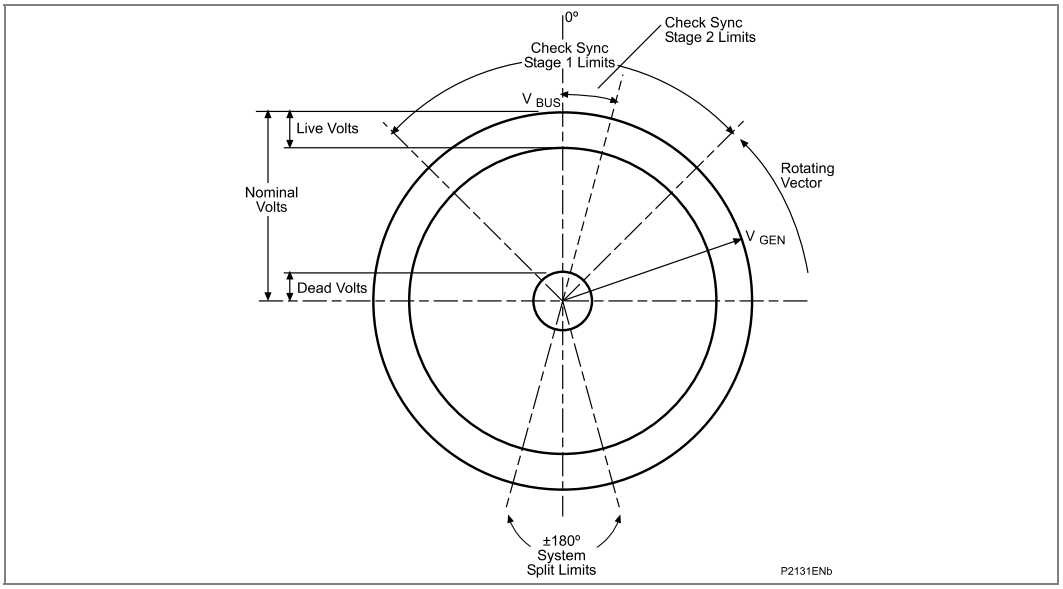

Figure 35 - Synchro check and synchro split functionality

The overall **Check Sync** and **System Split** functionality is shown in Figure 35.

In most situations where synchronism check is required, the Check Sync 1 function alone will provide the necessary functionality, and the Check Sync 2 and System Split signals can be ignored.

2.1.3.1 Voltage Monitors

The P34x System Checks function includes voltage monitors to indicate if the generator and system busbar voltages are Live or Dead.

The voltage monitor DDBs, if required, are combined in the PSL to provide the manual CB close check synchronizing logic, e.g. Dead Line/Live Gen. The DDBs are connected to the Man Check Synch DDB (1362) which provides an input to the CB control logic to indicate a manual check synchronizing condition is satisfied.

- When Vgen magnitude is > Live Voltage, the generator is taken as Live (DDB 1328, Live Gen)
- When Vgen magnitude is < Dead Voltage, the generator is taken as Dead (DDB 1329, Dead Gen)
- When Vbus magnitude is > Live Voltage, the busbar is taken as Live (DDB 1330, Live Bus)
- When Vbus magnitude is < Dead Voltage, the busbar is taken as Dead (DDB 1331, Dead Bus)

2.1.3.2 Synchronism Check

The P34x System Checks function includes 2 check synchronization elements, Check Sync 1 and Check Sync 2. The check synch 1 OK (1332) and Check Synch 2 OK (1333) DDBs, if required, are used in the PSL to provide the manual CB close check synchronizing logic. The DDBs are connected to the Man Check Synch DDB (1362) which provides an input to the CB control logic to indicate a manual check synchronizing condition is satisfied.

Each check synch element checks that the generator frequency, voltage magnitude, and phase angle match the system frequency, voltage magnitude, and phase angle before allowing the generator breaker to be closed. Each element includes settings for the phase angle difference and slip frequency between the generator and system busbar voltages.

The P34x also includes independent under/over voltage monitors for the generator and system side of the CB as well as a differential voltage monitor applicable to both the Check Sync 1 and 2 elements. The user can select a number of under/over/differential voltage check synchronizing blocking options using the setting **CS Voltage Block – None**, **V<**, **V>**, **Vdiff>**, **V< and V>**, **V< and Vdiff>**, **V> and Vdiff>**, **V< V> Vdiff>**.

The slip frequency used by Check Synch 1/2 can be calculated from the **CS1/2 Phase Angle** and **CS1/2 Slip Timer** settings as described below or can be measured directly from the frequency measurements, slip frequency = |Fgen-Fbus|. The user can select a number of slip frequency options using the settings **CS1 Slip Control – None**, **Timer Only**, **Frequency Only**, **Frequency + Timer, Frequency + CB** and **CS2 Slip Control – None**, **Timer**, **Frequency**.

If Slip Control by **Timer** or **Frequency + Timer/Both** is selected, the combination of CS **Phase Angle** and **CS Slip Timer** settings determines an effective maximum slip frequency, calculated as:

$$\frac{2 \times A}{T \times 360}$$ Hz. for Check Sync. 1, or

$$\frac{A}{T \times 360}$$ Hz. for Check Sync. 2

A = Phase Angle setting (°)
T = Slip Timer setting (seconds)

The **Frequency + CB** (Frequency + CB Time Compensation) setting modifies the Check Sync 2 function to take account of the circuit breaker closing time. When set to provide

CB Close Time compensation, a predictive approach is used to close the circuit breaker ensuring that closing occurs at close to 0º therefore minimizing the impact to the power system. The actual closing angle is subject to the constraints of the existing product architecture, i.e. the protection task runs four times per power system cycle, based on frequency tracking over the frequency range of 40 Hz to 70 Hz.

Check Sync 1 and Check Sync 2 are two synchronism check logic modules with similar functionality, but independent settings (see Figure 35).

For either module to function:

the **System Checks** setting must be **Enabled**

AND

the individual **CS1/2 Status** setting must be **Enabled**

AND

the module must be individually enabled, by activation of DDB signal **CS1/2 Enabled**, mapped in PSL.

When enabled, each logic module sets its output signal when:

Gen volts and bus volts are both live (Gen Live and Bus Live signals both set)

AND

measured phase angle is < **CS1/2 Phase Angle** setting

AND

(for Check Sync 2 only), the phase angle magnitude is decreasing (Check Sync 1 can operate with increasing or decreasing phase angle provided other conditions are satisfied)

AND

if **CS1/2 Slip Control** is set to **Frequency Only** or **Frequency** or **Frequency + Timer** the measured slip frequency is **< CS1/2 Slip Freq Setting**

AND

if **CS Voltage Block** is set to **V>** or **V< and V>** or **V> and VDiff>** or **V< V> Vdiff>**, both generator voltage and busbar voltage magnitudes are < **Gen Over Voltage** and **CS Over Voltage** setting respectively

AND

if **CS Voltage Block** is set to **V<**, or **V<** and **V>** or **V<** and **Vdiff>** or **V< V> Vdiff>,** generator voltage and busbar voltage magnitudes are **> Gen Under Voltage** and **CS Under Voltage** setting respectively

AND

if **CS Voltage Block** is set to **Vdiff>** or **V< and Vdiff** or **V> and VDiff>** or **V< V> Vdiff>**, the voltage magnitude difference between generator voltage and busbar voltage is < **CS Diff Voltage** setting

AND

if **CS 1/2 Slip Control** is set to **Timer** or **Frequency + Timer** (CS1) / **Freq + Timer** (CS2), the above conditions have been true for a time > or = **CS 1/2 Slip Timer** setting

2.1.3.3 System Split

For the System Split module to function (see Figure 35):

The **System Checks** setting must be **Enabled**

AND

the **SS Status** setting must be **Enabled**

AND

the module must be individually enabled, by activation of DDB signal **Sys Split Enabled**, mapped in PSL.

When enabled, the System Split module sets its output signal when:

Gen volts and bus volts are both live (Line Gen and Bus Live signals both set)

AND

measured phase angle is > **SS Phase Angle** setting

AND

if **SS Volt Blocking** is set to **Enabled**, both gen volts and bus volts magnitudes are > **SS Undervoltage** setting

The System Split output remains set for as long as the above conditions are true, or for a minimum period equal to the **SS Timer** setting, whichever is longer.

The overall system checks functionality and default PSL for the function is shown in Figure 36 respectively.

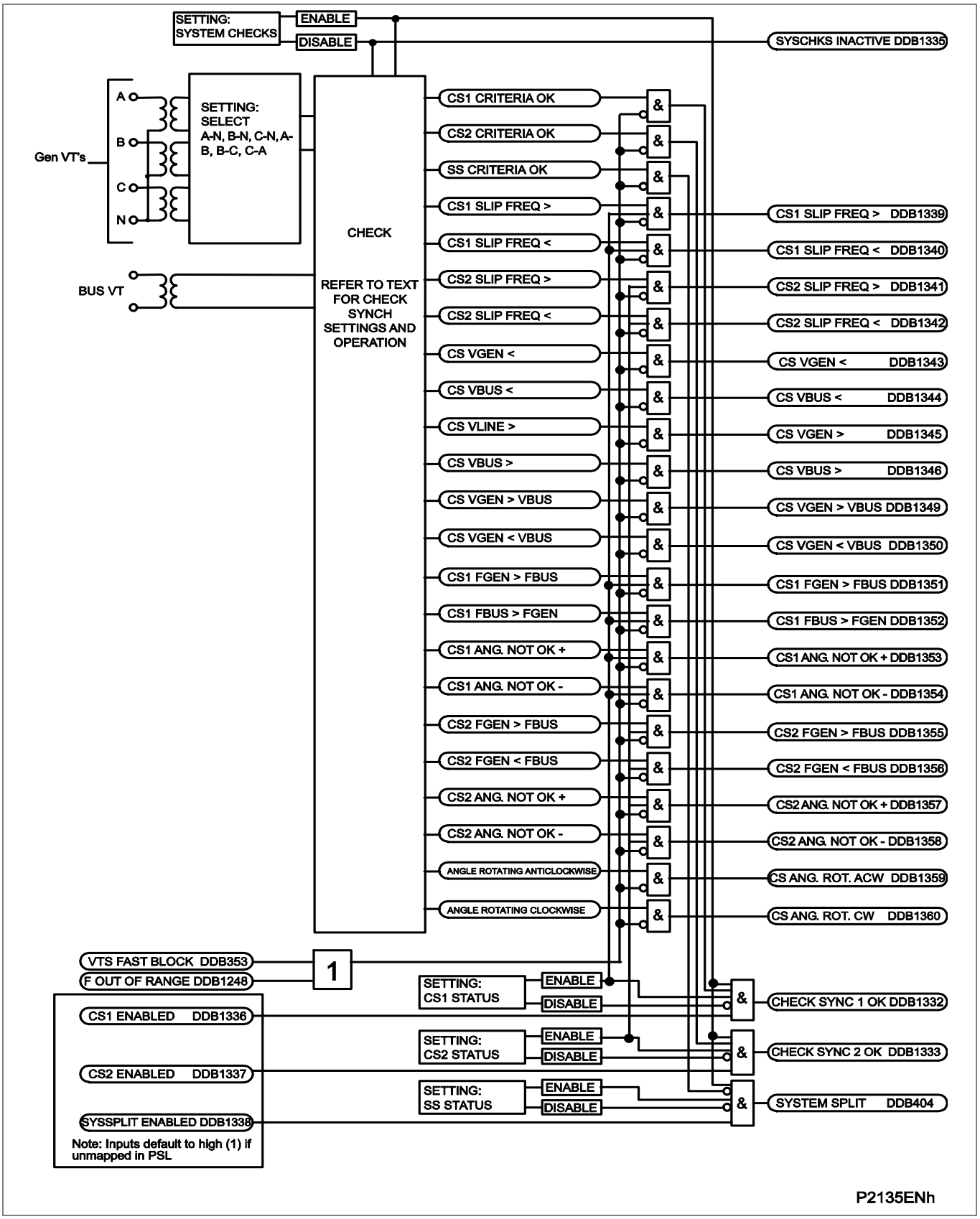

Figure 36 - System checks functional logic diagram

2.1.3.4 Voltage and Phase Angle Correction

This **C/S V Ratio Corr** setting in the **SYSTEM CONFIG** menu is used by the **System Check** function to provide magnitude correction to the check synch VT to correct for small differences between the main VT and check synch VT. Magnitude differences may be introduced by unmatched or slightly erroneous voltage transformer ratios, normally the setting is close to 1.0.

The **Main VT Vect Grp** setting in the **SYSTEM CONFIG** menu is used by the **System Check** function to provide vector correction between the main VT and check synch VT caused by the vector group phase shift (e.g. 30 degree phase shift for a Dy11 or Dy1 transformer vector group) across the generator-transformer.

There are some applications where the main VT is on the generator side of a transformer and the check sync VT is in the transformer LV side or vice-versa where vector group correction may be required.

2.2 VT Supervision

The Voltage Transformer Supervision (VTS) feature is used to detect failure of the ac voltage inputs to the relay. This may be caused by internal voltage transformer faults, overloading, or faults on the interconnecting wiring to relays. This usually results in one or more VT fuses blowing. Following a failure of the ac voltage input there would be a misrepresentation of the phase voltages on the power system, as measured by the relay, which may result in mal-operation.

The VTS logic in the relay is designed to detect the voltage failure, and automatically adjust the configuration of protection elements whose stability would otherwise be compromised. A time-delayed alarm output is also available.

There are three main aspects to consider regarding the failure of the VT supply. These are defined below:

1. Loss of one or two-phase voltages
2. Loss of all three-phase voltages under load conditions
3. Absence of three-phase voltages upon line energization

The VTS feature within the relay operates on detection of negative phase sequence (NPS) voltage without the presence of negative phase sequence current. This gives operation for the loss of one or two-phase voltages. Stability of the VTS function is assured during system fault conditions, by the presence of NPS current. The use of negative sequence quantities ensures correct operation even where three-limb or ‘V’ connected VT’s are used.

Negative sequence VTS element:

The negative sequence thresholds used by the element are V2 = 10 V (Vn = 100/120 V) or 40 V (Vn = 380/480 V), and I2 = 0.05 to 0.5 In settable (defaulted to 0.05 In).

2.2.1 Loss of All Three-Phase Voltages Under Load Conditions

Under the loss of all three-phase voltages to the relay, there will be no negative phase sequence quantities present to operate the VTS function. However, under such circumstances, a collapse of the three-phase voltages will occur. If this is detected without a corresponding change in any of the phase current signals (which would be indicative of a fault), then a VTS condition will be raised. In practice, the relay detects the presence of superimposed current signals, which are changes in the current applied to the relay. These signals are generated by comparison of the present value of the current with that exactly one cycle previously. Under normal load conditions, the value of superimposed current should therefore be zero. Under a fault condition a superimposed current signal will be generated which will prevent operation of the VTS.

The phase voltage level detectors are fixed and will drop off at 10 V (Vn = 100/120 V), 40 V (Vn = 380/480 V) and pick-up at 30 V (Vn = 100/120 V), 120 V (Vn = 380/480 V).

The sensitivity of the superimposed current elements is fixed at 0.1 In.

2.2.2 Absence of Three-Phase Voltages Upon Line Energization

If a VT were inadvertently left isolated prior to line energization, incorrect operation of voltage dependent elements could result. The previous VTS element detected three-phase VT failure by absence of all three-phase voltages with no corresponding change in current. On line energization there will, however, be a change in current (as a result of load or line charging current for example). An alternative method of detecting three-phase VT failure is therefore required on line energization.

The absence of measured voltage on all three-phases on line energization can be as a result of 2 conditions. The first is a three-phase VT failure and the second is a close up three-phase fault. The first condition would require blocking of the voltage dependent function and the second would require tripping. To differentiate between these 2 conditions an overcurrent level detector (VTS I> Inhibit) is used which will prevent a VTS block from being issued if it operates. This element should be set in excess of any non-fault based currents on line energization (load, line charging current, transformer inrush current if applicable) but below the level of current produced by a close up three-phase fault. If the line is now closed where a three-phase VT failure is present the overcurrent detector will not operate and a VTS block will be applied. Closing onto a three-phase fault will result in operation of the overcurrent detector and prevent a VTS block being applied.

This logic will only be enabled during a live line condition (as indicated by the relays pole dead logic) to prevent operation under dead system conditions i.e. where no voltage will be present and the VTS I> Inhibit overcurrent element will not be picked up.

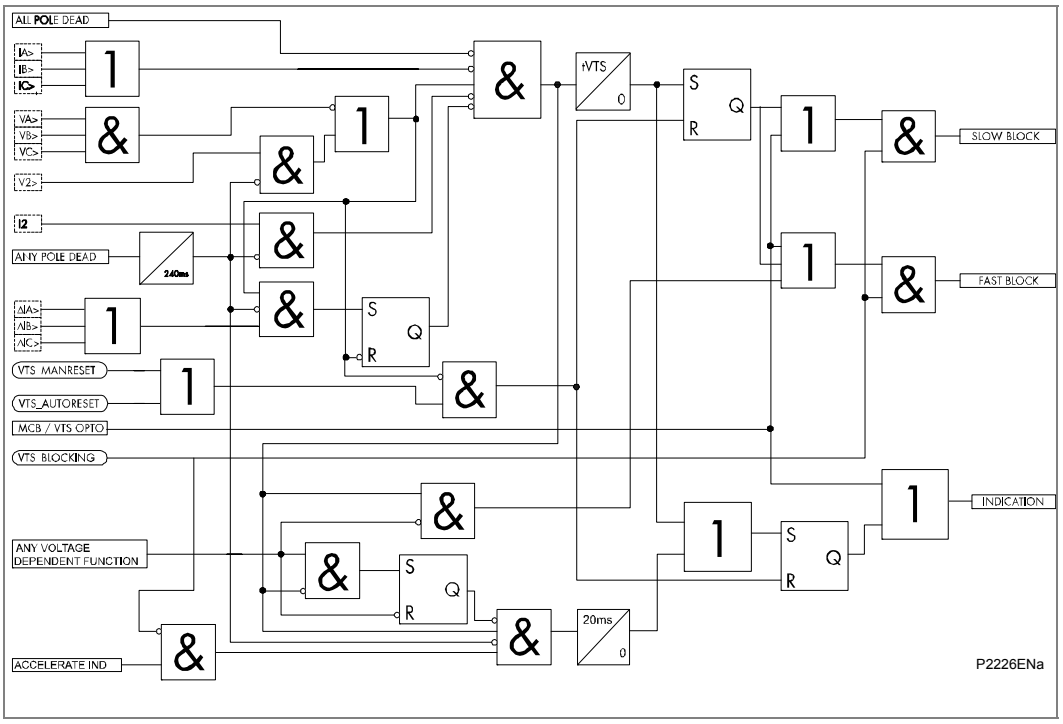

Figure 37 - VTS logic

Required to drive the VTS logic are a number of dedicated level detectors as follows:

- IA>, IB>, IC>, these level detectors operate in less than 20 ms and their settings should be greater than load current. This setting is specified as the VTS current threshold. These level detectors pick-up at 100% of setting and drop-off at 95% of setting.
- I2>, this level detector operates on negative sequence current and has a user setting. This level detector picks-up at 100% of setting and drops-off at 95% of setting.
- ΔIIA>, ΔIB>, ΔIC>, these level detectors operate on superimposed phase currents and have a fixed setting of 10% of nominal. These level detectors are subject to a count strategy such that 0.5 cycle of operate decisions must have occurred before operation.
- VA>, VB>, VC>, these level detectors operate on phase voltages and have a fixed setting, Pick-up level = 30 V (Vn = 100/120 V), 120 V (Vn = 380/480 V), Drop Off level = 10 V (Vn = 100/120 V), 40 V (Vn = 380/480 V).
- V2>, this level detector operates on negative sequence voltage, it has a fixed setting of 10 V/40 V depending on VT rating (100/120 or 380/480) with pick-up at 100% of setting and drop-off at 95% of setting.

2.2.2.1 Inputs

Signal name	Description
IA>, IB>, IC>	Phase current levels (Fourier magnitudes)
I2>	I2 level (Fourier magnitude).
ΔIA, ΔIB, ΔIC	Phase current samples (current and one cycle previous)
VA>, VB>, VC>	Phase voltage signals (Fourier magnitudes)
V2>	Negative sequence voltage (Fourier magnitude)
ALL POLE DEAD	Breaker is open for all phases (driven from auxiliary contact or pole dead logic).
VTS_MANRESET	A VTS reset performed via front panel or remotely.
VTS_AUTORESET	A setting to allow the VTS to automatically reset after this delay.
MCB/VTS OPTO	To remotely initiate the VTS blocking via an opto
Any Voltage Dependent Function	Outputs from any function that utilizes the system voltage, if any of these elements operate before a VTS is detected the VTS is blocked from operation. The outputs include starts and trips.
Accelerate Ind	Signal from a fast tripping voltage dependent function used to accelerate indications when the indicate only option is selected
Any Pole Dead	Breaker is open on one or more than one phases (driven from auxiliary contact or pole dead logic)
tVTS	The VTS timer setting for latched operation

Table 9 - VTS inputs

2.2.2.2 Outputs

Signal name	Description
VTS Fast Block	Used to block voltage dependent functions
VTS Slow Block	Used to block the Any Pole dead signal
VTS Indication	Signal used to indicate a VTS operation

Table 10 - VTS outputs

2.2.3 Operation

The relay may respond as follows to an operation of any VTS element:

- VTS set to provide alarm indication only (DDB 356 VT Fail Alarm);
- Optional blocking of voltage dependent protection elements (DDB 1248 VTS Fast Block, DDB 1249 VTS Slow Block);
- Optional conversion of directional SEF, directional overcurrent and directional NPS overcurrent elements to non-directional protection (available when set to blocking mode only). These settings are found in the function links cell of the relevant protection element columns in the menu.

Time delayed protection elements (Directional NPS Overcurrent, Directional SEF, Power, Sensitive Power, Field Failure) are blocked after the VTS Time Delay on operation of the VTS Slow Block. Fast operating protection elements (Directional overcurrent, Neutral Voltage Displacement, System Backup, Undervoltage, Dead Machine, Pole Slipping, NPS Overpower) are blocked on operation of the VTS Fast Block.

Note	*The directional SEF and neutral voltage displacement protection are only blocked by VTS if the neutral voltage input is set to Derived and not Measured.*

Other protections can be selectively blocked by customizing the PSL, integrating DDB 1248 VTS Fast Block and DDB 1249 VTS Slow Block with the protection function logic.

The VTS I> Inhibit or VTS I2> Inhibit elements are used to override a VTS block in event of a fault occurring on the system which could trigger the VTS logic. Once the VTS block has been established, however, then it would be undesirable for subsequent system faults to override the block. The VTS block will therefore be latched after a user settable time delay **VTS Time Delay**. Once the signal has latched then two methods of resetting are available. The first is manually via the front panel interface (or remote communications) provided the VTS condition has been removed and secondly, when in **Auto** mode, by the restoration of the three-phase voltages above the phase level detector settings mentioned previously.

A VTS indication will be given after the VTS Time Delay has expired. In the case where the VTS is set to indicate only the relay may potentially mal-operate, depending on which protection elements are enabled. In this case the VTS indication will be given prior to the VTS time delay expiring if a trip signal is given.

Where a Miniature Circuit Breaker (MCB) is used to protect the voltage transformer ac output circuits, it is common to use MCB auxiliary contacts to indicate a three-phase output disconnection. As previously described, it is possible for the VTS logic to operate correctly without this input. However, this facility has been provided for compatibility with various utilities current practices. Energizing an opto-isolated input assigned to “MCB Open” on the relay will therefore provide the necessary block.

Where directional overcurrent elements are converted to non-directional protection on VTS operation, it must be ensured that the current pick-up setting of these elements is higher than full load current.

The blocking of the VTS logic for a number of different fault conditions is considered below, assuming Vn = 100/120 V.

1. Phase-earth fault

   The I2> element should detect phase-earth faults and block the VTS logic when the CB is closed for solidly earthed generators.

   For a high impedance earthed system the level of Io, I2 and V2 will be very small <5% for an earth fault. For a generator connected to load if there is a close-up earth fault where the voltage on 1 phase < 10 V and the delta change in current on the faulted phase is >10%In the VTS logic is blocked.

   For example if load current is 0.5 In and there is an A-N fault then the current in the faulted phase will drop to say 1%In during an earth fault and so delta I A = 0.49 In which is > 0.1 In delta threshold. So, Delta I = ON, Any Pole Dead = OFF, VA> = OFF (<10 V) for a close up fault and so the VTS is blocked.

   During starting of the machine if the CB auxiliary contacts are indicating the CB is open the VTS logic is blocked. However, if a contact is used to indicate the CB is closed during the start up of the machine then the VTS logic will be active.

   If there is an A-N fault during the start-up of the machine and the CB is closed and the voltage was >30 V (VA>/VB>/VC>) if the VA> element drops off (<10 V) due to the fault and the delta change in current is <10% In (delta IA>) there could be a potential incorrect operation of the VTS logic.

   So, if the load current during the start up period is < 0.1 In then there could be a false VTS operation if the relay thinks the CB is closed.

Note:	*The VTS operates will block the derived neutral voltage protection but the measured neutral voltage protection is not blocked and will trip correctly during an earth fault.*

2. Phase-phase fault

The I2> element should detect phase-phase faults and block the VTS logic when the CB is closed.

3. Three-phase faults

The delta current level detectors should detect the change in current for a close up 3 phase fault when the CB is closed and block the VTS.
The IA>/IB>/IC> level detectors should detect a 3 phase fault when closing the CB onto a fault and block the VTS logic.

2.3 CT Supervision

The CT supervision feature operates on detection of derived residual current, in the absence of corresponding derived or measured residual voltage that would normally accompany it.

The CT supervision can be set to operate from the residual voltage measured at the VNEUTRAL input (VN input) or the residual voltage derived from the three-phase-neutral voltage inputs as selected by the **CTS Vn Input** setting.

The voltage transformer connection used must be able to refer residual voltages from the primary to the secondary side. Thus, this element should only be enabled where the three-phase VT is of five limb construction, or comprises three single-phase units, and has the primary star point earthed. A derived residual voltage or a measured residual voltage is available.

There is one stage of CT supervision CTS-1. The derived neutral current is calculated vectorially from IA, IB, IC for CTS-1. The neutral voltage is either measured or derived, settable by the user.

CTS-1 supervises the CT inputs to IA, IB, IC which are used by the all the power and overcurrent based protection functions.

Operation of the element will produce a time-delayed alarm visible on the LCD and event record (plus DDB 357: CT-1 Fail Alarm), with an instantaneous block (DDB 1263: CTS-1 Block) for inhibition of protection elements. Protection elements operating from derived quantities, (Negative Phase Sequence (NPS) Overcurrent and Thermal Overload protection) are always blocked on operation of the CTS-1 supervision element; other protections can be selectively blocked by customizing the PSL, integrating DDB 1263: CTS-1 Block with the protection function logic.

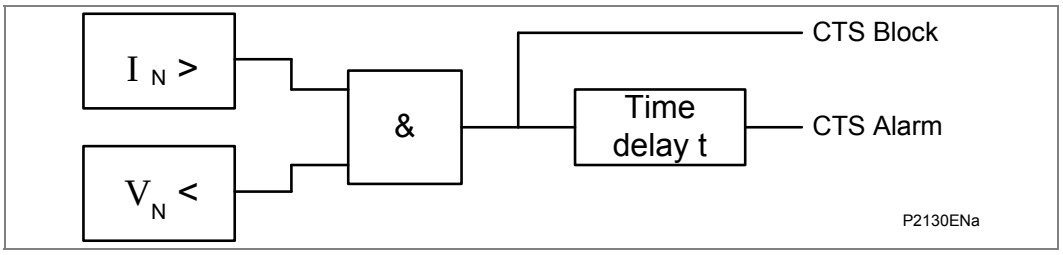

Figure 38 - CT supervision diagram

2.4 Circuit Breaker State Monitoring

An operator at a remote location requires a reliable indication of the state of the switchgear. Without an indication that each circuit breaker is either open or closed, the operator has insufficient information to decide on switching operations. The relay incorporates circuit breaker state monitoring, giving an indication of the position of the circuit breaker, or, if the state is unknown, an alarm is raised.

2.4.1 Circuit Breaker State Monitoring Features

Schneider Electric relays can be set to monitor normally open (52a) and normally closed (52b) auxiliary contacts of the circuit breaker. Under healthy conditions, these contacts will be in opposite states. Should both sets of contacts be open, this would indicate one of these conditions:

- Auxiliary contacts/wiring defective
- Circuit Breaker (CB) is defective
- CB is in isolated position

Should both sets of contacts be closed, only one of these two conditions would apply:

- Auxiliary contacts/wiring defective
- Circuit Breaker (CB) is defective

If any of the above conditions exist, an alarm will be issued after a 5 s time delay. A normally open/normally closed output contact can be assigned to this function via the Programmable Scheme Logic (PSL). The time delay is set to avoid unwanted operation during normal switching duties.

In the **CB CONTROL** column of the relay menu there is a setting called **CB Status Input**. This cell can be set at one of these four options:

- None
- 52A
- 52B
- Both 52A and 52B

Where **None** is selected no CB status will be available. This will directly affect any function within the relay that requires this signal, for example CB control, auto-reclose, etc. Where only 52A is used on its own then the relay will assume a 52B signal from the absence of the 52A signal. Circuit breaker status information will be available in this case but no discrepancy alarm will be available. The above is also true where only a 52B is used. If both 52A and 52B are used then status information will be available and in addition a discrepancy alarm will be possible, according to Table 11. 52A and 52B inputs are assigned to relay opto-isolated inputs via the PSL. The CB State Monitoring logic is shown in Figure 39.

Auxiliary contact position		CB state detected	Action
52A	52B		
Open	Closed	Breaker Open	Circuit breaker healthy
Closed	Open	Breaker Closed	Circuit breaker healthy
Closed	Closed	CB Failure	Alarm raised if the condition persists for greater than 5 s
Open	Open	State Unknown	Alarm raised if the condition persists for greater than 5 s

Table 11 - CB state logic

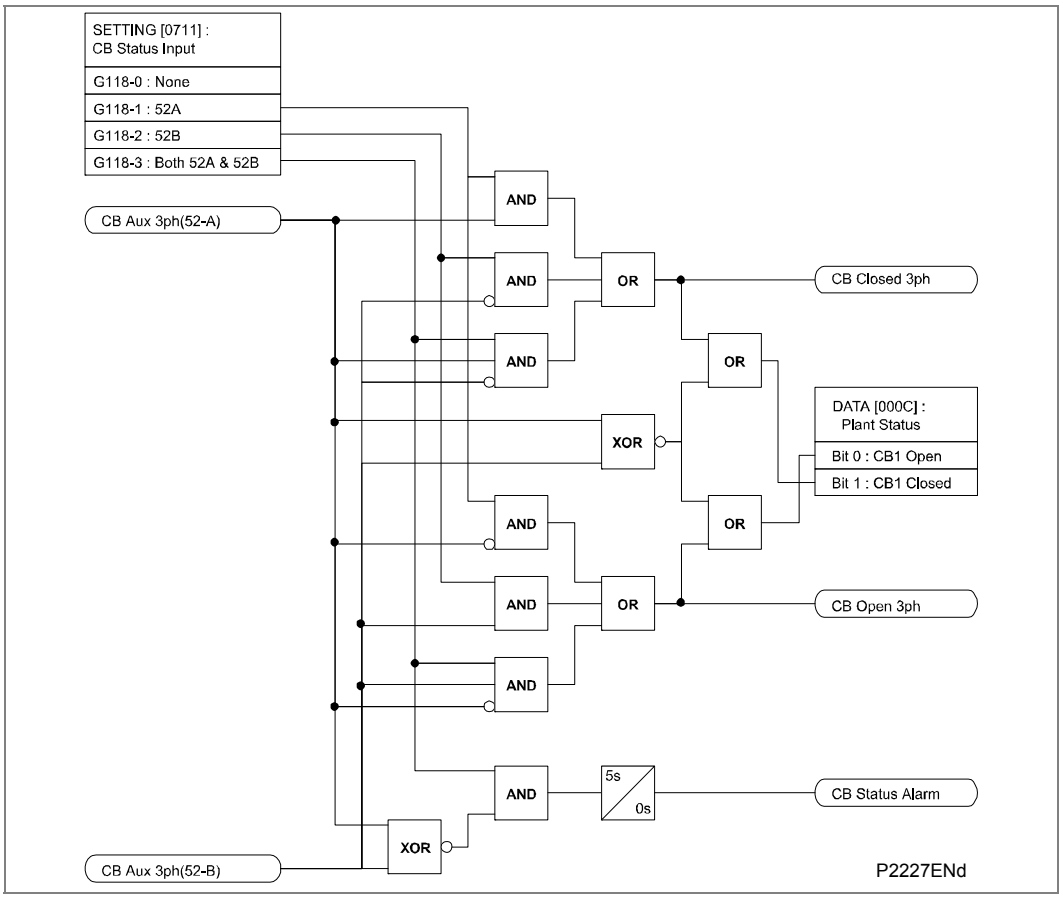

Figure 39 - CB state monitoring

2.5 Pole Dead Logic

The Pole Dead Logic can indicate if one or more phases of the line are dead. It can also be used to selectively block operation of the underfrequency, under voltage and power elements. The under voltage protection will be blocked by a pole dead condition provided the **Pole Dead Inhibit** setting is enabled. Any of the four underfrequency elements can be blocked by setting the relevant **F< function links**. The Power and Sensitive Power protection will be blocked by a pole dead condition provided the **Pole Dead Inhibit** setting is enabled.

A pole dead condition can be determined by either monitoring the status of the CB auxiliary contacts or by measuring the line currents and voltages. The status of the CB is provided by the **CB State Monitoring** logic. If a **CB Open** signal (DDB 1282) is given the relay will automatically initiate a pole dead condition regardless of the current and voltage measurement. Similarly if both the line current and voltage fall below a pre-set threshold the relay will also initiate a pole dead condition. This is needed so a pole dead indication is given even when an upstream breaker is opened. The undervoltage (V<) and undercurrent (I<) thresholds have these fixed, pickup and drop-off levels:

Settings	Range	Step size
V< Pick-up and drop off	10 V and 30 V (100/120 V) 40 V and 120 V (380/480 V)	Fixed
I< Pick-up and drop off	0.05 In and 0.055 In	Fixed

Table 12 - Pole dead settings

If one or more poles are dead, the relay will show which phase is dead and will also assert the ANY POLE DEAD DDB signal (DDB 1285). If all phases were dead the ANY POLE DEAD signal would be accompanied by the ALL POLE DEAD DDB signal (DDB 1284).

If the VT fails, a signal is taken from the VTS logic (DDB 1249 – VTS Slow Block) to block the pole dead indications that would be generated by the under voltage and undercurrent thresholds. However, the VTS logic will not block the pole dead indications if they are initiated by a **CB Open** signal (DDB 1282). Figure 40 shows the pole dead logic diagram:

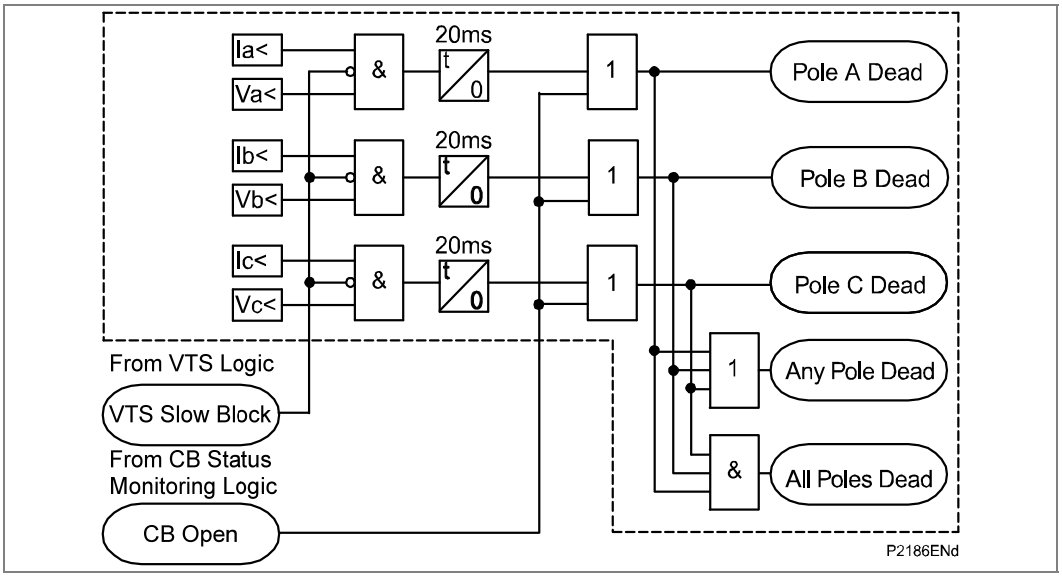

Figure 40 - Pole dead logic

2.6 Circuit Breaker (CB) Condition Monitoring

The P34x relays record various statistics related to each Circuit Breaker (CB) trip operation, allowing a more accurate assessment of the CB condition to be determined. These monitoring features are discussed in the following section.

2.6.1 Circuit Breaker (CB) Condition Monitoring Features

For each Circuit Breaker (CB) trip operation the relay records statistics as shown in Table 13 taken from the relay menu. The menu cells shown are counter values only. The Min./Max. values in this case show the range of the counter values. These cells can not be set:

Menu text	Default setting	Setting range		Step size
		Min.	Max.	
CB Operations {3 pole tripping}	0	0	10000	1
Displays the total number of 3 pole trips issued by the relay.				
Total IA Broken	0	0	25000 In^	1
Displays the total accumulated fault current interrupted by the relay for the A phase.				
Total IB Broken	0	0	25000 In^	1
Displays the total accumulated fault current interrupted by the relay for the A phase.				
Total IC Broken	0	0	25000 In^	1 In^
Displays the total accumulated fault current interrupted by the relay for the A phase.				
CB Operate Time	0	0	0.5 s	0.001
Displays the calculated CB operating time. CB operating time = time from protection trip to undercurrent elements indicating the CB is open.				
Reset CB Data	No		Yes, No	
Reset CB Data command. Resets CB Operations and Total IA/IB/IC broken current counters to 0.				

Table 13 - CB condition monitoring settings

The above counters may be reset to zero, for example, following a maintenance inspection and overhaul.

The CB condition monitoring counters will be updated every time the relay issues a trip command. In cases where the CB is tripped by an external protection device it is also possible to update the CB condition monitoring. This is achieved by allocating one of the relays opto-isolated inputs (via the programmable scheme logic) to accept a trigger from an external device. The signal that is mapped to the opto is called **Ext. Trip 3Ph**, DDB 680.

Note	*When in Commissioning test mode the CB condition monitoring counters will not be updated.*

2.7 Circuit Breaker (CB) Control

The relay includes these options for control of a single Circuit Breaker (CB):

- Local tripping and closing, via the relay menu.
- Local tripping and closing, via relay opto-isolated inputs.
- Remote tripping and closing, using the relay communications.

It is recommended that separate relay output contacts are allocated for remote CB control and protection tripping. This enables the control outputs to be selected via a local/remote selector switch as shown in Figure 41. Where this feature is not required the same output contact(s) can be used for both protection and remote tripping.

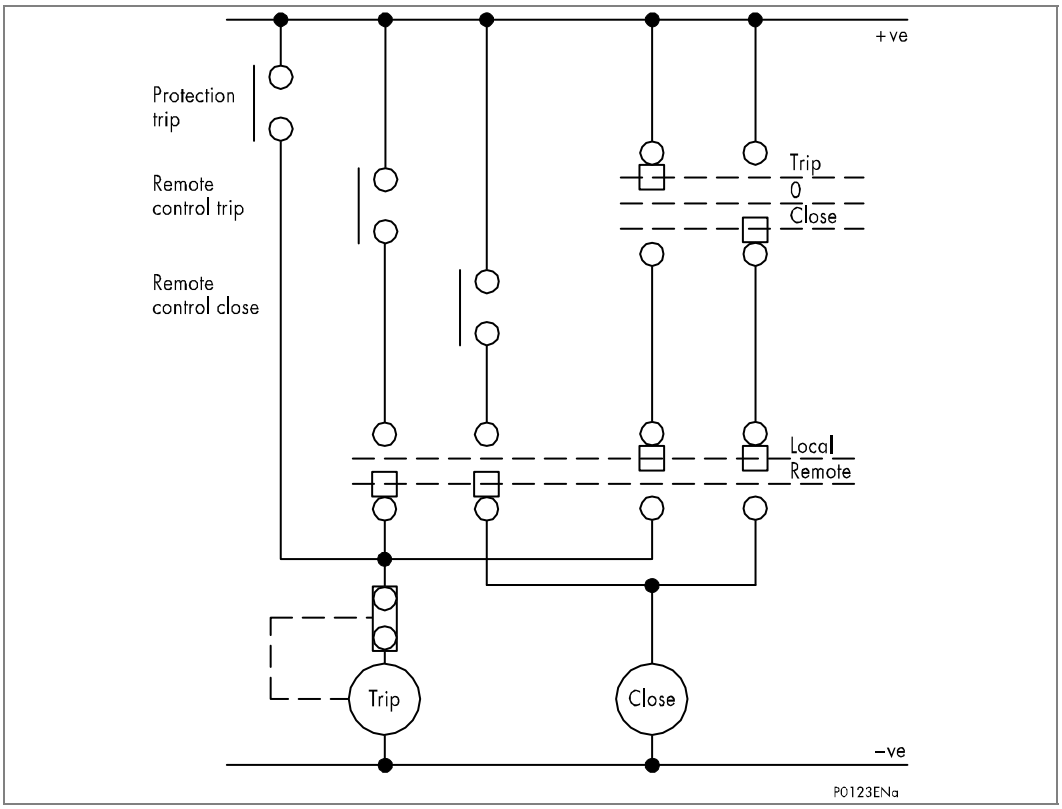

Figure 41 - Remote control of circuit breaker

Table 14 is taken from the relay menu and shows the available settings and commands associated with circuit breaker control. Depending on the relay model some of the cells may not be visible:

Menu text	Default setting	Setting range		Step size
		Min.	Max.	
CB control				
CB control by	Disabled	Disabled, Local, Remote, Local+Remote, Opto, Opto+Local, Opto+Remote, Opto+Rem+Local		
Close Pulse Time	0.5 s	0.01 s	10 s	0.01 s
Trip Pulse Time	0.5 s	0.01 s	5 s	0.01 s
Man Close Delay	10 s	0.01 s	600 s	0.01 s
CB Healthy Time	5 s	0.01 s	9999 s	0.01 s
Lockout Reset	No	No, Yes		

Menu text	Default setting	Setting range		Step size
		Min.	Max.	
CB control				
Reset Lockout By	CB Close	User Interface, CB Close		
Man Close RstDly	5 s	0.01 s	600 s	0.01 s
CB Status Input	None	None, 52A, 52B, Both 52A and 52B		

Table 14 - CB control settings

A manual trip will be permitted provided that the circuit breaker is initially closed. Likewise, a close command can only be issued if the CB is initially open. To confirm these states it will be necessary to use the breaker 52A and/or 52B contacts (the different selection options are given from the **CB Status Input** cell above). If no CB auxiliary contacts are available then this cell should be set to None. Under these circumstances no CB control (manual or auto) will be possible.

Once a CB Close command is initiated the output contact can be set to operate following a user-defined time delay (**Man Close Delay**). This would give personnel time to move away from the circuit breaker following the close command. This time delay will apply to all manual CB Close commands.

The length of the trip or close control pulse can be set via the **Trip Pulse Time** and **Close Pulse Time** settings respectively. These should be set long enough to ensure the breaker has completed its open or close cycle before the pulse has elapsed.

Note	*The manual close commands are found in the SYSTEM DATA column and the hotkey menu.*

If an attempt to close the breaker is being made, and a protection trip signal is generated, the protection trip command overrides the close command.

There is also a CB Healthy check if required. This facility accepts an input to one of the relays opto-isolators to indicate that the breaker is capable of closing (circuit breaker energy for example). A user settable time delay is included **CB Healthy Time** for manual closure with this check. If the CB does not indicate a healthy condition in this time period following a close command then the relay will lockout and alarm.

If the CB fails to respond to the control command (indicated by no change in the state of CB Status inputs) a **CB Failed to Trip** or **CB Failed to Close** alarm will be generated after the relevant trip or close pulses have expired. These alarms can be viewed on the relay LCD display, remotely via the relay communications, or can be assigned to operate output contacts for annunciation using the relays programmable scheme logic (PSL).

The **Lockout Reset** and **Reset Lockout by** setting cells in the menu are applicable to CB Lockouts associated with manual circuit breaker closure, CB Condition monitoring (Number of circuit breaker operations, for example).

The lockout alarms can be reset using the **Lockout Reset** command or the by pressing the Clear key after reading the alarm or by closing the CB if the **Reset Lockout By** setting is set to **CB Close** or via an opto input using DDB 690, Reset Lockout. If lockout is reset by closing the CB then there is a time delay after closing the CB to resetting of lockout, the **Man Close RstDly**.

2.7.1 CB Control using “Hotkeys”

The hotkeys allow direct access to the manual trip and close commands without the need to enter the **SYSTEM DATA** column. The CB trip and close functionality via the hotkey menu is identical to that of the **SYSTEM DATA** menu.

IF <<TRIP>> or <<CLOSE>> is selected the user is prompted to confirm the execution of the relevant command. If a trip is executed a screen with the CB status will be displayed

once the command has been completed. If a close is executed a screen with a timing bar will appear while the command is being executed. This screen has the option to cancel or restart the close procedure. The timer used is taken from the manual close delay timer setting in the CB Control menu. When the command has been executed, a screen confirming the present status of the circuit breaker is displayed. The user is then prompted to select the next appropriate command or exit – this will return to the default relay screen.

If no keys are pressed for a period of 25 seconds while waiting for the command confirmation, the relay will revert to showing the CB Status. If no key presses are made for a period of 25 seconds while displaying the CB status screen, the relay will revert to the default relay screen. Figure 42 shows the hotkey menu associated with CB control functionality.

To avoid accidental operation of the trip and close functionality, the hotkey CB control commands will be disabled for 10 seconds after exiting the hotkey menu.

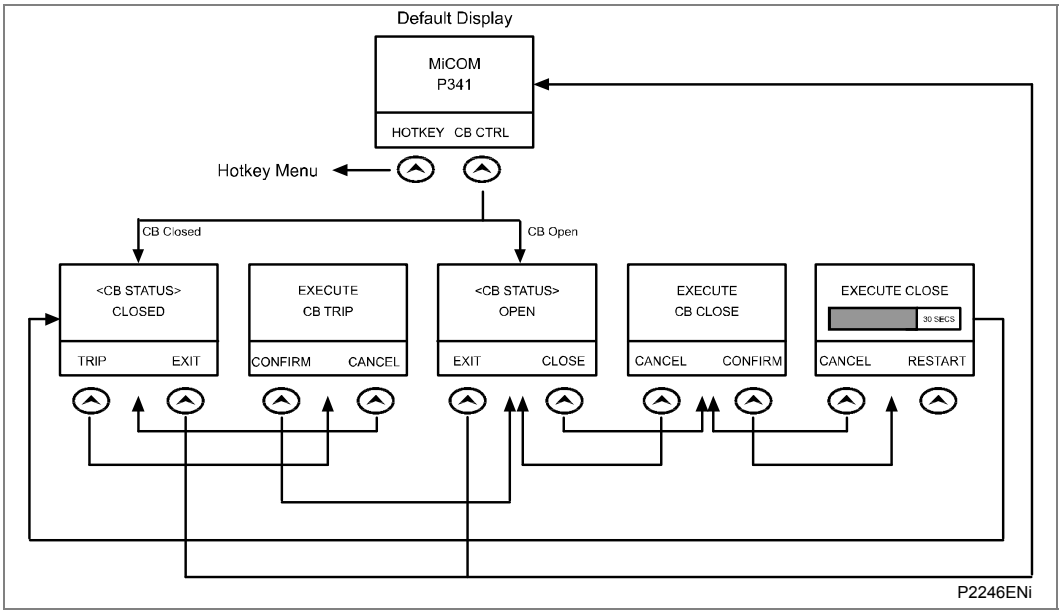

Figure 42 - CB control hotkey menu

2.8 Changing Setting Groups

The setting groups can be changed either via 2 DDB signals or via a menu selection selection or via the hotkey menu. In the Configuration column if **Setting Group** - **select via DDB** is selected then DDBs 676 (SG Select 1x) and 675 (SG Select x1), which are dedicated for setting group selection, can be used to select the setting group as shown in the table below. These DDB signals can be connected to opto inputs for local selection or control inputs for remote selection of the setting groups. If **Setting Group** - **select via menu** is selected then in the Configuration column the **Active Settings** - **Group1/2/3/4** can be used to select the setting group. The setting group can be changed via the hotkey menu providing **Setting Group select via menu** is chosen.

SG select 1x	SG select x1	Selected setting group
0	0	1
1	0	2
0	1	3
1	1	4

Table 15 - Setting group selection logic

Note *Setting groups comprise both Settings and Programmable Scheme Logic. Each is independent per group - not shared as common. The settings are generated in the Settings and Records application within S1 Studio, or can be applied directly from the relay front panel menu. The programmable scheme logic can only be set using the PSL Editor application within S1 Studio, generating files with extension ".psl".*

It is essential that where the installation needs application-specific PSL that the appropriate PSL file is downloaded (sent) to the relay, for each and every setting group that will be used. If the user fails to download the required PSL file to any setting group that may be brought into service, then factory default PSL will still be resident. This may have severe operational and safety consequences.

2.9 Control Inputs

The control inputs function as software switches that can be set or reset either locally or remotely. These inputs can be used to trigger any function that they are connected to as part of the PSL. There are three setting columns associated with the control inputs which are: **CONTROL INPUTS**, **CTRL I/P CONFIG** and **CTRL I/P LABELS**. The function of these columns is described below:

Menu text	Default setting	Setting range	Step size
CONTROL INPUTS			
Ctrl I/P Status	00000000000000000000000000000000		
Control Input 1	No Operation	No Operation, Set, Reset	
Control Input 2 to 32	No Operation	No Operation, Set, Reset	

Table 16 - Control inputs

The Control Input commands can be found in the **Control Input** menu. In the **Ctrl I/P status** menu cell there is a 32 bit word which represent the 32 control input commands. The status of the 32 control inputs can be read from this 32 bit word. The 32 control inputs can also be set and reset from this cell by setting a 1 to set or 0 to reset a particular control input. Alternatively, each of the 32 Control Inputs can be set and reset using the individual menu setting cells **Control Input 1, 2, 3,** etc. The Control Inputs are available through the relay menu as described above and also via the rear communications.

In the programmable scheme logic editor 32 Control Input signals, DDB 1376 - 1407, which can be set to a logic 1 or On state, as described above, are available to perform control functions defined by the user.

The status of the Control Inputs are held in non-volatile memory (battery backed RAM) such that when the relay is power-cycled, the states are restored upon power-up.

Menu text	Default setting	Setting range	Step size
CTRL I/P CONFIG			
Hotkey Enabled	11111111111111111111111111111111		
Control Input 1	Latched	Latched, Pulsed	
Ctrl Command 1	SET/RESET	SET/RESET, IN/OUT, ENABLED/DISABLED, ON/OFF	
Control Input 2 to 32	Latched	Latched, Pulsed	
Ctrl Command 2 to 32	SET/RESET	SET/RESET, IN/OUT, ENABLED/DISABLED, ON/OFF	

Table 17 - Control input configuration

Menu text	Default setting	Setting range	Step size
CTRL I/P LABELS			
Control Input 1	Control Input 1	16 character text	
Control Input 2 to 32	Control Input 2 to 32	16 character text	

Table 18 - Control input labels

The **CTRL I/P CONFIG** column has several functions one of which allows the user to configure the control inputs as either **latched** or **pulsed**. A latched control input will remain in the set state until a reset command is given, either by the menu or the serial communications. A pulsed control input, however, will remain energized for 10ms after the set command is given and will then reset automatically (i.e. no reset command required).

In addition to the latched/pulsed option this column also allows the control inputs to be individually assigned to the “Hotkey” menu by setting ‘1’ in the appropriate bit in the **Hotkey Enabled** cell. The hotkey menu allows the control inputs to be set, reset or pulsed without the need to enter the **CONTROL INPUTS** column. The **Ctrl Command** cell also allows the **SET/RESET** text, displayed in the hotkey menu, to be changed to something more suitable for the application of an individual control input, such as **ON / OFF**, **IN / OUT** etc.

The **CTRL I/P LABELS** column makes it possible to change the text associated with each individual control input. This text will be displayed when a control input is accessed by the hotkey menu, or it can be displayed in the PSL.

Note	*With the exception of pulsed operation, the status of the control inputs is stored in battery backed memory. In the event that the auxiliary supply is interrupted the status of all the inputs will be recorded. Following the restoration of the auxiliary supply the status of the control inputs, prior to supply failure, will be reinstated. If the battery is missing or flat the control inputs will set to logic 0 once the auxiliary supply is restored.*

2.10 PSL DATA Column

The P341 range of relays contains a **PSL DATA** column that can be used to track PSL modifications. A total of 12 cells are contained in the **PSL DATA** column, 3 for each setting group. The function for each cell is shown below:

`Grp PSL Ref`	When downloading a PSL to the relay, the user will be prompted to enter which groups the PSL is for and a reference ID. The first 32 characters of the reference ID will be displayed in this cell. The □ and □ keys can be used to scroll through 32 characters as only 16 can be displayed at any one time.
`18 Nov 2002` `08:59:32.047`	This cell displays the date and time when the PSL was down loaded to the relay.
`Grp 1 PSL ID –` `2062813232`	This is a unique number for the PSL that has been entered. Any change in the PSL will result in a different number being displayed.

Note *The above cells are repeated for each setting group.*

2.11 Auto Reset of Trip LED Indication

The trip LED can be reset when the flags for the last fault are displayed. The flags are displayed automatically after a trip occurs, or can be selected in the fault record menu. The reset of trip LED and the fault records is performed by pressing the ˜ key once the fault record has been read.

Setting **Sys Fn Links** (**SYSTEM DATA** Column) to logic “1” sets the trip LED to automatic reset. Resetting will occur when the circuit is reclosed and the **Any Pole Dead** signal (DDB 1284) has been reset for three seconds. Resetting, however, will be prevented if the **Any start** signal is active after the breaker closes.

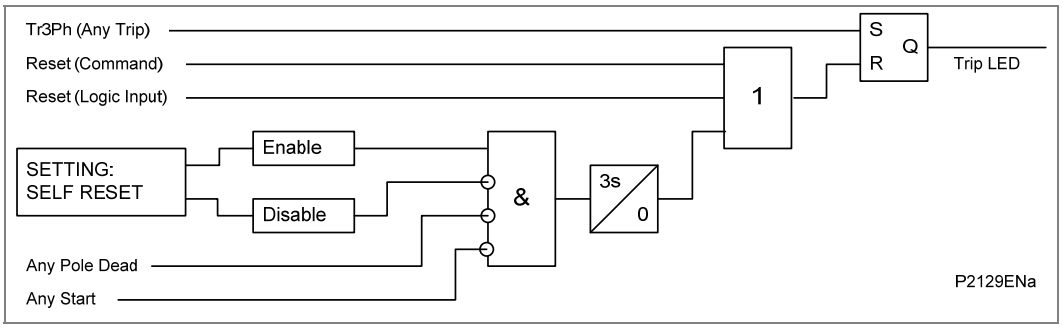

Figure 43 - Trip LED logic diagram

2.12 Reset of Programmable LEDs and Output Contacts

The programmable LEDs and output contacts can be set to be latched in the programmable scheme logic. If there is a fault record then clearing the fault record by pressing the ⓒ key once the fault record has been read will clear any latched LEDs and output contacts. If there is no fault record, then as long as the initiating signal to the LED or output contact is reset the LEDs and contacts can be reset by one of these two methods.

1. Via the **View Records** - **Reset Indications** menu command cell
2. Via DDB 689 Reset Relays/LED which can be mapped to an Opto Input or a Control Input for example

2.13 Real Time Clock Synchronization Via Opto-Inputs

In modern protective schemes it is often desirable to synchronize the relays real time clock so that events from different relays can be placed in chronological order. This can be done using the IRIG-B input, if fitted, or via the communication interface connected to the substation control system. In addition to these methods the P341 range offers the facility to synchronize via an opto-input by routing it in PSL to DDB 687 (Time Sync.). Pulsing this input will result in the real time clock snapping to the nearest minute if the pulse input is ± 3 s of the relay clock time. If the real time clock is within 3 s of the pulse the relay clock will crawl (the clock will slow down or get faster over a short period) to the correct time. The recommended pulse duration is 20 ms to be repeated no more than once per minute. An example of the time sync. function is shown below:

Time of “sync. pulse”	Corrected time
19:47:00 to 19:47:29	19:47:00
19:47:30 to 19:47:59	19:48:00

Table 19 - Time sync example

Note	*The above assumes a time format of hh:mm:ss*

To avoid the event buffer from being filled with unnecessary time sync. events, it is possible to ignore any event that generated by the time sync. opto input. This can be done by applying these settings:

Menu text	Value
RECORD CONTROL	
Opto Input Event	Enabled
Protection Event	Enabled
DDB 63 - 32 (Opto Inputs)	Set “Time Sync.” associated opto to 0

Table 20 - Event filtering of time sync signal

To improve the recognition time of the time sync. opto input by approximately 10 ms, the opto input filtering could be disabled. This is achieved by setting the appropriate bit to 0 in the **Opto Filter Cntl** cell (**OPTO CONFIG** column).

Disabling the filtering may make the opto input more susceptible to induced noise. Fortunately the effects of induced noise can be minimized by using the methods described in the Firmware Design chapter.

2.14 Any Trip

The **Any Trip** DDB (DDB 674) has been made independent from Relay 3 in the version 32 software. In previous versions of software the **Any Trip** signal was the operation of Relay 3. In the version 32 software DDB 674 is the **Any Trip** signal and any output contact used for tripping can be connected to the **Any Trip** DDB leaving Relay 3 to be freely assigned for any function. The **Any Trip** signal affects these functions:

- Operates the Trip LED
- Triggers CB condition maintenance counters
- Used to measure the CB operating time
- Triggers the circuit breaker failure logic
- Used in the Fault recorder logic

In the default PSL, Relay 3 is still mapped to the **Any Trip** DDB and the **Fault REC TRIG** DDB signals. If the user wants to make use of the CB maintenance features, CB failure function etc they should map the output contact(s) assigned for tripping the monitored circuit breaker to the **Any Trip** DDB. The output contact(s) assigned for tripping the monitored circuit breaker should also be connected to the fault record trigger **Fault REC TRIG** DDB 672 for fault record triggering.

Where relay 3 or any other contact is used to initiate the **Any Trip** signal the contact should not be set to latched as the **Any Trip** is used to trigger (on pick-up) and reset (on drop-off) the fault recorder window. So if the **Any Trip** is latched the fault recording window never resets and so you won't see a fault record on the relay front display as the relay thinks the fault is still present.

The default setting for relay 3 is a dwell time of 100 ms, a dwell is the minimum time the contact will be ON and is used for trip functions to ensure a good quality trip signal is obtained. As an example of a dwell timer, a dwell of 100 ms means that if the initiating signal is ON for 10 ms then the output contact is ON for 100 ms and if the initiating signal is ON for 200 ms then the output contact is ON for 200 ms.

2.15 Read Only Mode

With IEC 61850 and Ethernet/Internet communication capabilities, security has become a pressing issue. The Px40 relay provides a facility to allow the user to enable or disable the change in configuration remotely. This feature is available only in relays with Courier, Courier with IEC 60870-5-103, Courier with IEC 61850 and IEC 61850 protocol options. It has to be noted that in IEC 60870-5-103 protocol, Read Only Mode function is different from the existing Command block feature.

Read only mode can be enabled/disabled for these rear ports:

- Rear Port 1 – IEC 60870-5-103 and Courier protocols
- Rear Port 2 (if fitted) - Courier protocol
- Ethernet Port (if fitted) - Courier protocol ("tunneled")

Notes:

APPLICATION NOTES

CHAPTER 6

Date:	February 2012
Hardware Suffix:	J (P341)
Software Version:	36 and 71 (with DLR)
Connection Diagrams:	10P341xx (xx = 01 to 12)

CONTENTS

Page (AP) 6-

FIGURES

Page (AP) 6-

TABLES

Page (AP) 6-

Notes:

1 INTRODUCTION

1.1 Interconnection Protection

Small-scale generators can be found in a wide range of situations. These may be used to provide emergency power in the event of loss of the main supply. Alternatively the generation of electrical power may be a by-product of a heat/steam generation process. Where such embedded generation capacity exists it can be economic to run the machines in parallel with the local Public Electricity Suppliers (PES) network. This can reduce a sites overall power demand or peak load. Additionally, excess generation may be exported and sold to the local PES. If parallel operation is possible great care must be taken to ensure that the embedded generation does not cause any dangerous conditions to exist on the local PES network.

PES networks have in general been designed for operation where the generation is supplied from central sources down into the network. Generated voltages and frequency are closely monitored to ensure that values at the point of supply are within statutory limits. Tap changers and tap changer control schemes are optimized to ensure that supply voltages remain within these limits. Embedded generation can affect the normal flow of active and reactive power on the network leading to unusually high or low voltages being produced and may also lead to excessive fault current that could exceed the rating of the installed distribution switchgear/cables.

It may also be possible for the embedded generators to become disconnected from the main source of supply but be able to supply local load on the PES network. Such islanded operation must be avoided for several reasons

- To ensure that unearthed operation of the PES network is avoided
- To ensure that automatic reclosure of system circuit breakers will not result in connecting unsynchronized supplies causing damage to the generators
- To ensure that system operations staff cannot attempt unsynchronized manual closure of an open circuit breaker.
- To ensure that there is no chance of faults on the PES system being undetectable due to the low fault supplying capability of the embedded generator
- To ensure that the voltage and frequency supplied to PES customers remains within statutory limits

Before granting permission for the generation to be connected to their system the PES must be satisfied that no danger will result. The type and extent of protection required at the interconnection point between PES system and embedded generation will need to be analyzed.

The P341 relay has been designed to provide a wide range of protection functions required to prevent dangerous conditions that could be present when embedded generators provide power to local power supply networks when the main connection with the Electricity Supply system is lost.

The relay also includes a comprehensive range of non-protection features to aid with power system diagnosis and fault analysis. All these features can be accessed remotely from one of the relay's remote serial communications options.

2 APPLICATION OF INDIVIDUAL PROTECTION FUNCTIONS

The following sections detail the individual protection functions in addition to where and how they may be applied. Each section also gives setting guidelines for each protection function.

2.1 Phase Rotation

2.1.1 Description

A facility is provided in the P341 to maintain correct operation of all the protection functions even when the generator is running in a reverse phase sequence. This is achieved through user configurable settings available for the four setting groups.

The default phase sequence for P341 is the clockwise rotation ABC. Some power systems may have a permanent anti-clockwise phase rotation of ACB.

In pump storage applications there is also a common practice to reverse two phases to facilitate the pumping operation, using phase reversal switches. However, depending on the position of the switches with respect to the VTs and CTs, the phase rotation may not affect all the voltage and current inputs to the relay. The following sections describe some common scenarios and their effects. In the description, CT1 provides current measurements for all the current based protection.

For pump storage applications the correct phase rotation settings can be applied for a specific operating mode and phase configuration in different setting groups. The phase configuration can then be set by selecting the appropriate setting group, see the Operation chapter for more information of changing setting groups. This method of selecting the phase configuration removes the need for external switching of CT circuits or the duplication of relays with connections to different CT phases. The phase rotation settings should only be changed when the machine is off-line so that transient differences in the phase rotation between the relay and power system due to the switching of phases don't cause operation of any of the protection functions. To ensure that setting groups are only changed when the machine is off-line the changing of the setting groups could be interlocked with the IA/IB/IC undercurrent start signals and an undervoltage start signal in the PSL.

2.1.1.1 Case 1 - Phase Reversal Switches affecting all CTs and VTs

The phase reversal affects all the voltage and current measurements in the same way, irrespective of which two phases are being swapped. This is also equivalent to a power system that is permanently reverse phase reversed.

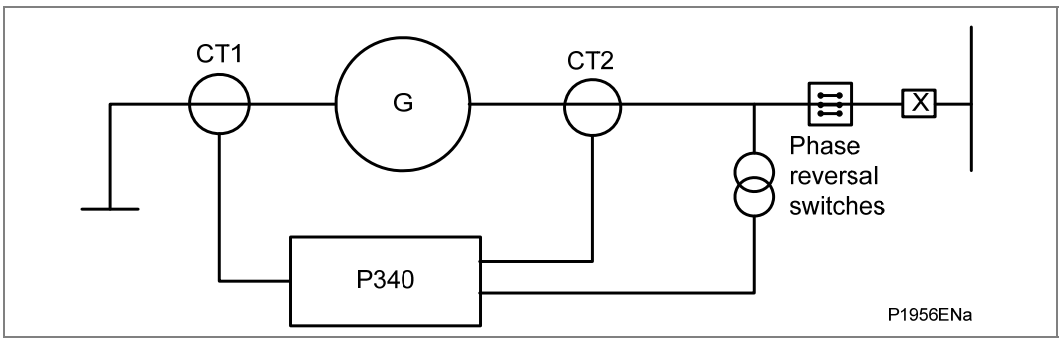

Figure 1 - Phase reversal - case 1

All the protection functions that use the positive and negative sequence component of voltage and current will be affected (NPS overcurrent and NPS overvoltage, thermal

overload, voltage transformer supervision). Directional overcurrent is also affected as the polarizing signal (Vbc, Vca, Vab) is reversed by the change in phase rotation.

The relationship between voltages and currents from CT for the standard phase rotation and reverse phase rotation is shown in Figure 2.

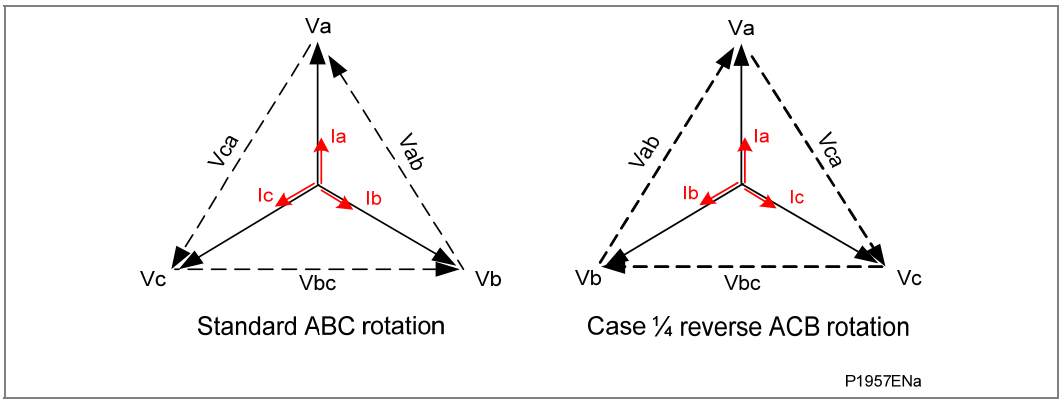

Figure 2 - Standard and reverse phase rotation

In the above example, the System Config settings - Standard ABC and Reverse ACB can be used in two of the Setting Groups to affect the phase rotation depending on the position of the phase reversal switch.

2.1.1.2 Case 2 - Phase Reversal Switches Affecting CT Only

The phase reversal affects CT1 only. All the protection functions that use CT1 currents and the 3 phase voltages (power, directional overcurrent) will be affected, since the reversal changes the phase relationship between the voltages and currents. The protection that use positive and negative sequence current and voltage will also be affected.

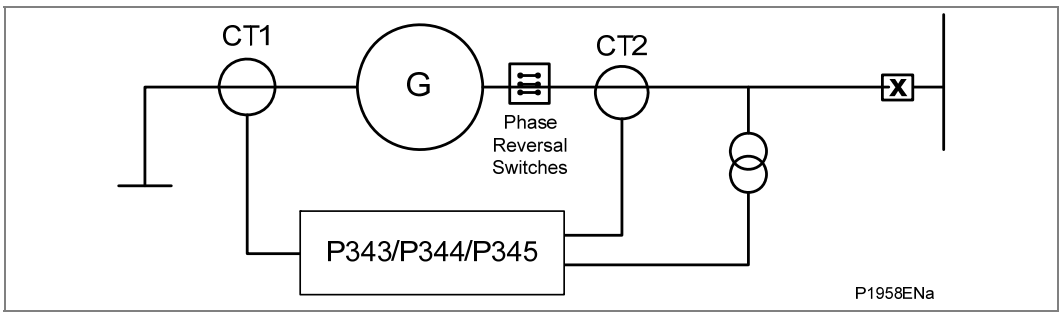

Figure 3 - Phase reversal - case 2

Note	*There are 2 approaches to using the System Config settings where 2 phases are swapped. The settings can be used to maintain a generator view of the phase sequence or a system (or busbar) view of the phase sequence for a generator fault.*

For example, in Case 2, for a generator A-phase winding fault, the relay will report a B phase fault if the CT1 Reversal setting is set to A-B Swapped (system or busbar view of faulted phase). For a busbar fault the correct faulted phase will be given in the fault record.

So, to obtain a phase sequence maintaining a generator viewpoint for a generator fault the CTs/VTs not affected by the change must have the phase swapping setting to match the external switching. Also, since the machine's sequence rotation has been affected, the Phase Sequence - Reverse ACB setting will also need to be applied accordingly.

To obtain a phase sequence maintaining a system viewpoint for a generator fault the CTs/VTs affected by the change must have the phase swapping setting to match the external switching.

The Sensitive Power is a single phase power element using A phase current usually from a separate metering class CT and A phase voltage. If Sensitive Power is applied and the A phase current only has been swapped, the power calculation will be wrong since the voltage and current inputs are not from the same phase. If for example in Case 2 the A-B phases are swapped and the sensitive CT is on the generator side of the switch. It is possible to use the approach where the VT phases are swapped so that the A-phase voltage (from generator's view point) is restored for the correct calculation of the A-phase power. The sensitive current input is a single phase current input in the relay and so it's phase rotation can not be swapped to match the voltage inputs on the busbar in this application.

2.2 Rate of Change of Frequency Protection (81R)

The two main applications for df/dt protection are network decoupling (loss of mains/loss of grid) and load shedding.

2.2.1 Load Shedding

Generated and required active power need to be well balanced in any industrial, distribution or transmission network. As load increases, the generation needs to be stepped up to maintain frequency of the supply because there are many frequency sensitive electrical apparatus that can be damaged when network frequency departs from the allowed band for safe operation. At times, when sudden overloads occur, the frequency drops at a rate decided by the system inertia constant, magnitude of overload, system damping constant and various other parameters. Unless corrective measures are taken at the appropriate time, frequency decay can go beyond the point of no return and cause widespread network collapse. In a wider scenario, this can result in "Blackouts". To put the network back into a healthy condition, a considerable amount of time and effort is required to re-synchronize and re-energize.

Protective relays that can detect a low frequency condition are generally used in such cases to disconnect unimportant loads in order to save the network, by re-establishing the "generation-load equation". However, with such devices, the action is initiated only after the event and while some salvaging of the situation can be achieved, this form of corrective action may not be effective enough and cannot cope with sudden load increases, causing large frequency decays in very short times. In such cases a device that can anticipate the severity of frequency decay and act to disconnect loads before the frequency actually reaches dangerously low levels, can become very effective in containing damage.

During severe disturbances, the frequency of the system oscillates as various generators try to synchronize on to a common frequency. The frequency decay needs to be monitored over a longer period of time and time delayed df/dt can be used to make the correct decision for load shedding or provide early warning to the operator on a developing frequency problem. Additionally, the element could also be used as an alarm to warn operators of unusually high system frequency variations.

In the load shedding scheme below, it is assumed under falling frequency conditions that by shedding a stage of load, the system can be stabilized at frequency f2. For slow rates of decay, this can be achieved using the underfrequency protection element set at frequency f1 with a suitable time delay. However, if the generation deficit is substantial, the frequency will rapidly decrease and it is possible that the time delay imposed by the underfrequency protection will not allow for frequency stabilization. In this case, the chance of system recovery will be enhanced by disconnecting the load stage based upon a measurement of rate of change of frequency and bypassing the time delay.

A time delayed rate of change of frequency monitoring element that operates independently from the under and overfrequency protection functions could be used to provide extra flexibility to a load shedding scheme in dealing with such a severe load to generation imbalance. A more secure load shedding scheme could be implemented using f + df/ft by supervising the df/dt element with under frequency elements.

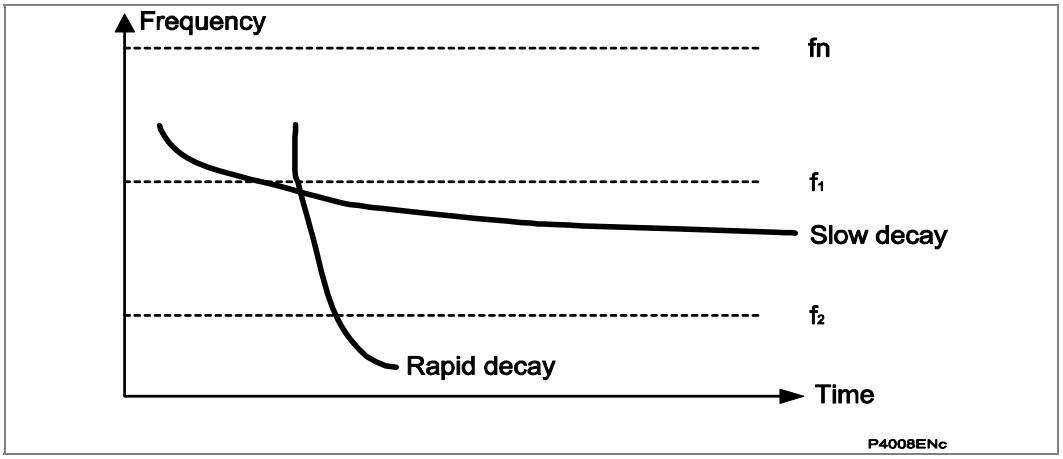

Figure 4 - Rate of change of frequency protection

2.2.2 Loss of Mains Protection

If the capacity of an embedded generator exceeds the locally connected load it is conceivable that it could supply the local load in island mode. Fault clearance may disconnect part of the public supply system from the main source of supply resulting in the embedded generation feeding the local loads, i.e. a 'Loss of Mains' or 'Loss of Grid' condition. This is shown in Figure 5. A fault at F will result in the tripping of CB1 disconnecting substations S1, S2 and S3 from the main source of supply. Also note that transformer T1 was supplying the earth connection for S1, S2 and S3, this earth connection is lost when CB1 opens. Should the load at substations S1 and S2 greatly exceed the rating of EG1, the generator will slow down quickly and underfrequency and/or undervoltage relays could operate to disconnect EG1 from the system. The worst scenario is when the external load is smaller than the generator rating; in this case the generator can continue to operate normally supplying the external loads. The local system will now be operating unearthed and overcurrent protection may be inoperative at S1 and S2 due to the low fault supplying capacity of generator EG1. The embedded generator may also lose synchronism with the main system supply leading to serious problems if CB1 has auto reclosing equipment.

An even more serious problem presents itself if manual operation of distribution switchgear is considered. System Operation staff may operate circuit breakers by hand. In these circumstances it is essential that unsynchronized reclosure is prevented as this could have very serious consequences for the operator, particularly if the switchgear is not designed, or rated, to be operated when switching onto a fault. To protect personnel, the embedded machine must be disconnected from the system as soon as the system connection is broken, this will ensure that manual unsynchronized closure is prevented.

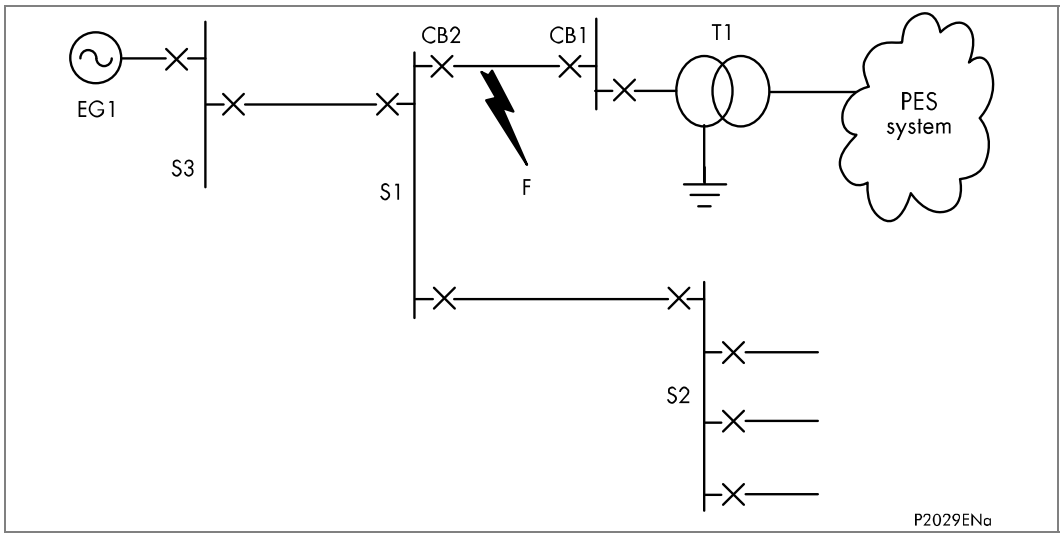

Figure 5 - Typical system with embedded generation

Where the embedded generator does not export power under normal conditions it may be possible to use directional power or directional overcurrent protection relays to detect the export of power under loss of mains conditions. If export of power into the system is allowed it may not be possible to set directional relays using settings sensitive enough to detect the loss of the mains connection. In such circumstances a rate of change of frequency protection can be applied. This detects the slight variation in generator speed that occurs when the main supply connection is disconnected and the generator experiences a step change in load.

The type of protection required to detect Loss of Mains conditions will depend on a number of factors, e.g. the generator rating, size of local load, ability to export power, and configuration of supply network etc. Protection requirements should be discussed and agreed with the local Public Electricity Supplier before permission to connect the embedded generator in parallel with the system is granted.

A number of protection elements that may be sensitive to the Loss of Mains conditions are offered in the P341 relay; rate of change of frequency, voltage vector shift, overpower protection, directional overcurrent protection, frequency protection, voltage protection. Application of each of these elements is discussed in more detail in the following sections.

When a machine is running in parallel with the main power supply the frequency and hence speed of the machine will be governed by the grid supply. When the connection with the grid is lost, the islanded machine is free to slow down or speed up as determined by the new load conditions, machine rating and governor response. Where there is a significant change in load conditions between the synchronized and islanded condition the machine will speed up or slow down before the governor can respond.

The rate of change of speed, or frequency, following a power disturbance can be approximated by:

$$df/dt = \frac{\Delta P.f}{2GH}$$

Where

P	=	Change in power output between synchronized and islanded operation
f	=	Rated frequency
G	=	Machine rating in MVA
H	=	Inertia constant

This simple expression assumes that the machine is running at rated frequency and that the time intervals are short enough that AVR and governor dynamics can be ignored.

From this equation it is clear that the rate of change of frequency is directly proportional to the change in power output between two conditions. Provided there is a small change in load between the synchronized and islanded (loss of mains) condition the rate of change of frequency as the machine adjusts to the new load conditions can be detectable. The change in speed of the machine is also proportional to the inertia constant and rating of the machine and so will be application dependent.

Care must be taken in applying this type of protection as the prime consideration is detecting the loss of grid connection. Failure to detect this condition may result in unsynchronized re-connection via remote re-closing equipment. However, if too sensitive a setting is chosen there is a risk of nuisance tripping due to frequency fluctuations caused by normal heavy load switching or fault clearance. Guidance can be given for setting a rate of change of frequency element but these settings must be thoroughly tested on site to prove their accuracy for a given machine and load.

The element also allows the user to set a frequency band within which the element is blocked. This provides additional stability for non loss of grid disturbances which do not affect the machine frequency significantly.

2.2.3 Setting Guidelines for df/dt Protection

There are some global df/dt settings that affect all protection stages that can be used to smooth out the frequency measurements and provide stable operation of the protection, **df/dt avg cycles** and **df/dt iterations**. These settings enable the user to select the number of cycles the frequency is averaged over and the number of iterations of the averaged cycles before a start is given. Two **Operating Mode** settings are provided: **Fixed Window** and **Rolling Window**. The **Fixed Window** setting is mainly provided for compatibility with the previous P341 df/dt function which used two consecutive calculations of a 3 cycle fixed window to initiate a start.

The previous software version P341 df/dt element calculated the rate of change of frequency every 3 cycles by calculating the frequency difference over the 3-cycle period as shown below.

$$df/_{dt} = \frac{f_n - f_{n-3cycle}}{3cycle}$$

Two consecutive calculations must give a result above the setting threshold before a trip decision can be initiated.

For loss of grid applications it is recommended that **df/dt avg cycles** = 3 and **df/dt iterations** = 2 and the **Operating Mode = Fixed Window** as per the original P341 algorithm.

For load shedding applications the **df/dt avg cycles** and **df/dt iterations** and the **Operating Mode**, **Fixed Window/Rolling Window** will depend on the operating time and stability requirements. The df/dt measurement will provide more stability to power system oscillations when the number of iterations and averaging cycles is high but this will make the function slower. Typical settings for load shedding applications are df/dt avg cycles = 5, df/dt **iterations = 1** and the **Operating Mode = Rolling Window**. For load shedding applications with low df/dt settings < 0.5 Hz/s higher settings for the averaging cycles and iterations should be considered to provide better stability.

The df/dt feature is available only when the **df/dt** option is enabled in the **CONFIGURATION** menu. All four stages may be enabled/disabled by the **df/dt>n Status** cell depending on which element is selected.

Each stage has a direction setting **df/dt>n Dir'n - Negative**, **Positive**, **Both**. This setting determines whether the element will react to rising or falling frequency conditions respectively, with an incorrect setting being indicated if the threshold is set to zero. For

loss of mains applications the **df/dt>1 Dir'n** should be set to **Both** to match the previous P341 algorithm.

A sudden disconnection of loads leads to a surplus of active power. The frequency rises and causes a positive frequency change. A failure of generators, on the other hand, leads to a deficit of active power. The frequency drops and leads to a negative frequency change. For load shedding applications the **df/dt>1 Dir'n** is typically set to Negative for falling frequencies.

For loss of mains applications the **df/dt>1** setting threshold should be set such that the loss of mains condition can be detected; this can be determined by system switching during initial commissioning. A typical setting for **df/dt>1 Setting** is 0.2 to 0.6 Hz/s. For df/dt>1 only, the user can select a deadband around the nominal frequency, within which this element is blocked. The dead band is defined with high and low frequency settings **df/dt>1 f Low** and **df/dt> f High**. The deadband is eliminated if the high and low frequencies are set the same or the **df/dt> f L/H** setting is set to **Disabled**. The deadband provides additional stability for non loss of grid disturbances which do not affect the machine frequency significantly.

System simulation testing has shown that the following settings can provide stable operation for external faults, and load switching events, whilst operating for a loss of mains event which causes a 10% change in the machine output, for a typical 4 MW machine. These can be used as a guide but will by no means be acceptable in all applications. Machine rating, governor response, local load and system load, will all affect the dynamic response of a machine to a loss of mains event.

df/dt>1 Setting	0.2 Hz/s
df/dt Time Delay	0.5 s
df/dt>1 f High	50.5 Hz
df/dt>1 f Low	49.5 Hz
df/dt>1 **Dir'n**	Both

Once installed, the settings should be periodically reviewed to ensure that they are adequate to detect a loss of grid connection event, but not too sensitive such that unwanted tripping occurs during normal fault clearance, or load switching, that does not lead to the loss of mains condition. Safety of personnel is paramount and this should be kept in mind when optimizing settings; non-synchronized manual operation of circuit breakers must be prevented by disconnection of the embedded machine when the system becomes separated.

For load shedding the **df/dt>n setting** value depends on the application and is determined by power system conditions. In most cases, a network analysis will be necessary. The under/overfrequency start DDBs can be used to supervise the df/dt elements using the df/dt>1/2/3/4 Tmr Blk DDBs, if required to provide a more secure load shedding scheme.

The following can be used as an example for estimation of the df/dt settings. This applies for the change rate at the beginning of a frequency change (approx. 1 second).

$$df/dt = \frac{\Delta P.f}{2GH}$$

For hydro-electric generators (salient-pole machines) H = 1.5 s to 6 s

For turbine-driven generators (cylindrical-rotor machines) H = 2 s to 10 s

For industrial turbine-generators H = 3 s to 4 s

f = nominal frequency

H = 3 s

Case 1: ΔP/G = 0.12

Case 1: ΔP/G = 0.48

Case 1: df/dt = -1 Hz/s

Case 2: df/dt = -4 Hz/s

The time delay setting, **df/dt>n Time Delay**, can be used to provide a degree of stability against normal load switching events which will cause a change in the frequency before governor correction.

2.3 Voltage Vector Shift Protection (ΔVθ)

The P341 has a single stage Voltage Vector Shift protection element. This element measures the change in voltage angle over successive power system half-cycles. The element operates by measuring the time between zero crossings on the voltage waveforms. A measurement is taken every half cycle for each phase voltage. Over a power system cycle this produces 6 results, a trip is issued if 5 of the 6 calculations for the last power system cycle are above the set threshold. Checking all three phases makes the element less susceptible to incorrect operation due to harmonic distortion or interference in the measured voltage waveform.

An expression for a sinusoidal mains voltage waveform is generally given by the following:

$V = Vp \sin(wt)$ or $V = Vp \sin \theta(t)$

Where

$\theta(t) = wt = 2\pi ft$

If the frequency is changing at constant rate Rf from a frequency fo then the variation in the angle $\theta(t)$ is given by:

$\theta(t) = 2\pi \int f\, dt,$

which gives

$\theta(t) = 2\pi (f_o t + t R_f t/2),$

and

$V = V \sin \{2\pi (f_o + t R_f/2)t\}$

Hence the angle change $\Delta\theta(t)$ after time t is given by:

$$\Delta\theta(t) = \pi R_f t^2,$$

Therefore the phase of the voltage with respect to a fixed frequency reference when subject to a constant rate of change of frequency changes in proportion to t^2. This is a characteristic difference from a rate of change of frequency function, which in most conditions can be assumed as changing linearly with time.

A rate of change of frequency of 10 Hz/s results in an angular voltage vector shift of only 0.72 degrees in the first cycle after the disturbance. This is too small to be detected by vector shift relays. In fact a typical setting for a voltage vector shift relay is, normally between 6 and 13 degrees. Therefore a voltage vector shift relay is not sensitive to the change in voltage phase brought about by change of frequency alone.

To understand the relation between the resulting voltage vector angle change following a disturbance and the embedded generator characteristics a simplified single phase equivalent circuit of a synchronous generator or induction generator is shown in Figure 6, Figure 7 and Figure 8. The voltage VT is the symmetrical terminal voltage of the generator and the voltage E is the internal voltage lying behind the machine impedance which is largely reactive (X). When a disturbance causes a change in current the terminal voltage will jump with respect to its steady state position. The resultant voltage

vector is dependent on the rate of change in current, and the subtransient impedance of the machine, which is the impedance the generator presents to a sudden load change. In turn the current change depends on how strong the source is (short circuit capacity) and the voltage regulation at the generator terminal which is also affected by the reactive power load connected to the machine.

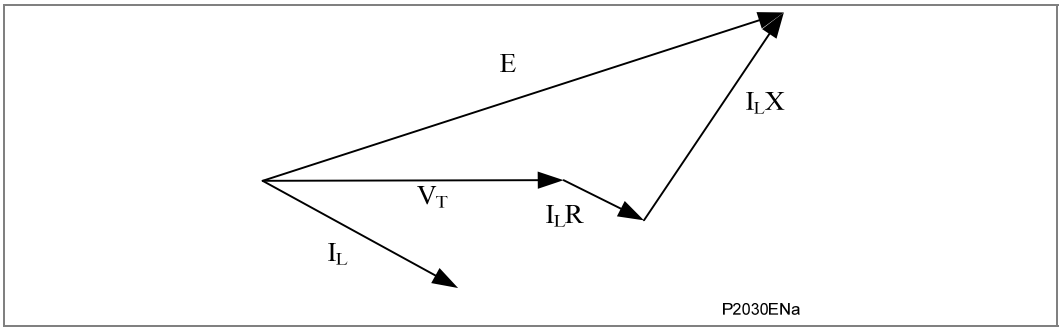

Figure 6 - Vector diagram representing steady state condition

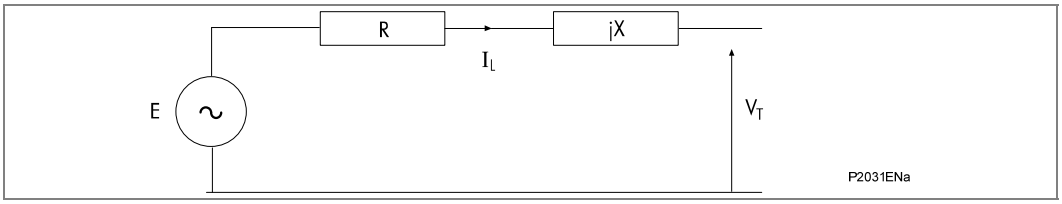

Figure 7 - Single phase line diagram showing generator parameters

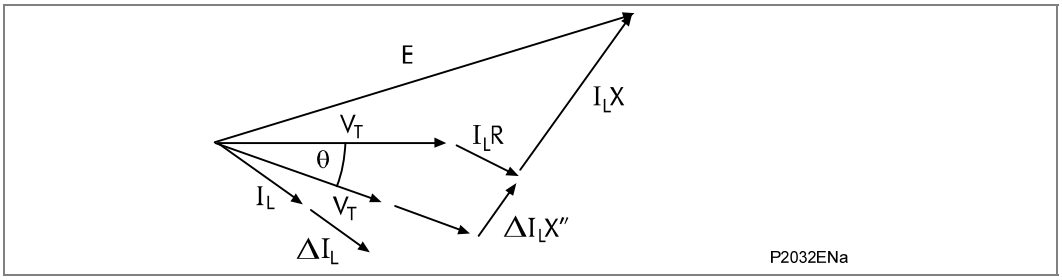

Figure 8 - Transient voltage vector change θ due to change in load current ΔIL

The voltage vector shift function is designed to respond within one to two full mains cycles when its threshold is exceeded. Discrimination between a loss of mains condition and a circuit fault is therefore achievable only by selecting the angle threshold to be above expected fault levels. This setting can be quantified by calculating the angular change due to islanding. However this angular change depends on system topology, power flows and very often also on the instant of the system faults. For example a bolted three phase short circuit which occurs close to the relay may cause a problem in that it inherently produces a vector shift angle at the instant of the fault which is bigger than any normal setting, independent of the mains condition. This kind of fault would cause the relay to trip shortly after the instant of its inception. Although this may seem to be a disadvantage of the vector shift function, isolating the embedded generator at the instant of a bolted three phase fault is of advantage to the PES. This is because the mains short circuit capacity and consequently the energy feeding the short circuit is limited by the instant operation of the relay. The fast operation of this vector shift function renders it to operate at the instant of a disturbance rather than during a gradual change caused by a gradual change of power flow. Operation can occur at the instant of inception of the fault, at fault clearance or following non-synchronized reclosure, which affords additional protection to the embedded generator.

2.3.1 Setting Guidelines for Voltage Vector Shift Protection

The element can be selected by setting the **V Shift Status** cell to **Enabled**.

The angle change setting threshold, **V Shift Angle**, should be set to the desired level.

The setting threshold should be set such that the loss of mains condition can be detected, this can be determined by system switching during initial commissioning. System simulation testing has shown that a **V Shift Angle** setting of 10º can provide stable operation for external faults, and load switching events, whilst operating for a loss of mains event which causes a 10% change in the machine output for a typical 4 MW machine. Although in some circumstances, this setting may prove to be too sensitive, it is recommended to achieve a successful loss of mains trip in as many cases as possible. Although the vector shift function may trip the relay due to a bolted 3 phase fault, it is also essential in securing a trip at the instant of an out-of-phase auto-reclose, where the df/dt function does not trip.

This setting should be used as a guide but will by no means be acceptable in all applications. Machine rating, governor response, local load and system load, will all affect the dynamic response of a machine to a loss of mains event. Once installed the settings should be periodically reviewed to ensure that they are adequate to detect a loss of grid connection event, but not too sensitive such that unwanted tripping occurs during normal fault clearance that does not lead to the loss of mains condition. Safety of personnel is paramount and this should be kept in mind when optimizing settings; non-synchronized manual operation of circuit breakers must be prevented by disconnection of the embedded machine when the system becomes separated.

2.4 Reconnection Timer (79)

Due to the sensitivity of the settings applied to the df/dt and/or the Voltage Vector Shift element, false operation for non loss of mains events may occur. This could, for example, be due to a close up three phase fault which can cause operation of a Voltage Vector Shift element. Such operations will lead to the disconnection of the embedded machine from the external network and prevent export of power. Alternatively the loss of mains protections may operate correctly, and auto re-closure equipment may restore the grid supply following a transient fault.

Disconnection of an embedded generator could lead to a simple loss of revenue. Or in cases where the licensing arrangement demands export of power at times of peak load may lead to penalty charges being imposed. To minimize the disruption caused, the P341 includes a reconnection timer. This timer is initiated following operation of any protection element that could operate due to a loss of mains event, i.e. df/dt, voltage vector shift, under/overfrequency, power and under/over voltage. The timer is blocked should a short circuit fault protection element operate, i.e. residual overvoltage, overcurrent, and earth fault. Once the timer delay has expired the element will provide a pulsed output signal. This signal can be used to initiate external synchronizing equipment that can re-synchronies the machine with the system and reclose the CB.

2.4.1 Setting Guidelines for the Reconnect Delay

The element can be selected by setting the **Reconnect Status** cell to **Enabled**.

The timer setting, **Reconnect Delay**, should be set to the desired delay, this would typically be longer than the dead time of system auto reclose equipment to ensure that re-synchronization is only attempted after the system has been returned to a normal state. The signal pulse time, **Reconnect tPULSE** should be set such that the output pulse is sufficient to securely initiate the auto synchronizing equipment when required.

2.5 Reverse Power/Overpower/Low Forward Power (32R/32O/32L)

2.5.1 Low Forward Power Protection Function

When the machine is generating and the CB connecting the generator to the system is tripped, the electrical load on the generator is cut. This could lead to generator over-speed if the mechanical input power is not reduced quickly. Large turbo-alternators, with low-inertia rotor designs, do not have a high over speed tolerance. Trapped steam in the turbine, downstream of a valve that has just closed, can rapidly lead to over speed. To reduce the risk of over speed damage to such sets, it is sometimes chosen to interlock non-urgent tripping of the generator breaker and the excitation system with a low forward power check. This ensures that the generator set circuit breaker is opened only when the output power is sufficiently low that over speeding is unlikely. The delay in electrical tripping, until prime mover input power has been removed, may be deemed acceptable for 'non-urgent' protection trips; e.g. stator earth fault protection for a high impedance earthed generator. For 'urgent' trips, e.g. stator current differential protection the low forward power interlock should not be used. With the low probability of 'urgent' trips, the risk of over speed and possible consequences must be accepted.

The low forward power protection can be arranged to interlock 'non-urgent' protection tripping using the relay scheme logic. It can also be arranged to provide a contact for external interlocking of manual tripping, if desired.

To prevent unwanted relay alarms and flags, a low forward power protection element can be disabled when the circuit breaker is opened via 'poledead' logic.

The low forward power protection can also be used to provide loss of load protection when a machine is motoring. It can be used for example to protect a machine which is pumping from becoming unprimed or to stop a motor in the event of a failure in the mechanical transmission.

A typical application would be for pump storage generators operating in the motoring mode, where there is a need to prevent the machine becoming unprimed which can cause blade and runner cavitation. During motoring conditions, it is typical for the relay to switch to another setting group with the low forward power enabled and correctly set and the protection operating mode set to Motoring.

A low forward power element may also be used to detect a loss of mains or loss of grid condition for applications where the distributed generator is not allowed to export power to the system.

2.5.1.1 Low Forward Power Setting Guideline

Each stage of power protection can be selected to operate as a low forward power stage by selecting the **Power1 Function/Sen Power1 Func** or **Power2 Function/Sen Power 2 Func** cell to **Low Forward**.

When required for interlocking of non-urgent tripping applications, the threshold setting of the low forward power protection function, **P<1 Setting/Sen P<1 Setting** or **P<2 Setting/Sen P<2 Setting**, should be less than 50% of the power level that could result in a dangerous over speed transient on loss of electrical loading. The generator set manufacturer should be consulted for a rating for the protected machine. The operating mode should be set to **Generating** for this application.

When required for loss of load applications, the threshold setting of the low forward power protection function, **P<1 Setting/Sen P<1 Setting** or **P<2 Setting/Sen P<2 Setting**, is system dependent, however, it is typically set to 10 - 20% below the minimum load. For example, for a minimum load of 70%Pn, the setting needs to be set at 63% - 56%Pn. The operating mode should be set to **Motoring** for this application.

For interlocking non-urgent trip applications the time delay associated with the low forward power protection function, **Power1 TimeDelay/Sen Power1 Delay** or **Power2 TimeDelay/Sen Power2 Delay**, could be set to zero. However, some delay is desirable so that permission for a non-urgent electrical trip is not given in the event of power fluctuations arising from sudden steam valve/throttle closure. A typical time delay for this reason is 2 s.

For loss of load applications the pick up time delay, **Power1 TimeDelay/Sen Power1 Delay** or **Power2 TimeDelay/Sen Power2 Delay**, is application dependent but is normally set in excess of the time between motor starting and the load being established. Where rated power can not be reached during starting (for example where the motor is started with no load connected) and the required protection operating time is less than the time for load to be established then it will be necessary to inhibit the power protection during this period. This can be done in the PSL using AND logic and a pulse timer triggered from the motor starting to block the power protection for the required time.

When required for loss of mains or loss of grid applications where the distributed generator is not allowed to export power to the system, the threshold setting of the reverse power protection function, **P<1 Setting/Sen P<1 Setting** or **P<2 Setting/Sen P<2 Setting**, should be set to a sensitive value, typically <2% of the rated power.

The low forward power protection function should be time-delayed to prevent false trips or alarms being given during power system disturbances or following synchronization. A time delay setting, **Power1 TimeDelay/Sen Power1 Delay** or **Power2 TimeDelay/Sen Power2 Delay** of 5 s should be applied typically.

The delay on reset timer, **Power1 DO Timer** or **Power2 DO Timer**, would normally be set to zero when selected to operate low forward power elements.

To prevent unwanted relay alarms and flags, a low forward power protection element can be disabled when the circuit breaker is open via ‘poledead’ logic. This is controlled by setting the power protection, inhibit cells, **P1 Poledead Inh** or **P2 Poledead Inh**, to **Enabled**.

2.5.2 Reverse Power Protection Function

A generator is expected to supply power to the connected system in normal operation. If the generator prime mover fails, a generator that is connected in parallel with another source of electrical supply will begin to 'motor'. This reversal of power flow due to loss of prime mover can be detected by the reverse power element.

The consequences of generator motoring and the level of power drawn from the power system will be dependent on the type of prime mover. Typical levels of motoring power and possible motoring damage that could occur for various types of generating plant are given in Table 1.

Prime mover	Motoring power	Possible damage (percentage rating)
Diesel Engine	5% - 25%	Risk of fire or explosion from unburned fuel
Motoring level depends on compression ratio and cylinder bore stiffness. Rapid disconnection is required to limit power loss and risk of damage.		
Gas Turbine	10% - 15% (Split-shaft) >50% (Single-shaft)	With some gear-driven sets, damage may arise due to reverse torque on gear teeth.
Compressor load on single shaft machines leads to a high motoring power compared to split-shaft machines. Rapid disconnection is required to limit power loss or damage.		
Hydraulic Turbines	0.2 - >2% (Blades out of water) >2.0% (Blades in water)	Blade and runner cavitation may occur with a long period of motoring
Power is low when blades are above tail-race water level. Hydraulic flow detection devices are often the main means of detecting loss of drive. Automatic disconnection is recommended for unattended operation.		
Steam Turbines	0.5% - 3% (Condensing sets) 3% - 6% (Non-condensing sets)	Thermal stress damage may be inflicted on low-pressure turbine blades when steam flow is not available to dissipate windage losses.
Damage may occur rapidly with non-condensing sets or when vacuum is lost with condensing sets. Reverse power protection may be used as a secondary method of detection and might only be used to raise an alarm.		

Table 1 - Consequences of loss of prime mover

Table 1 shows motor power and possible damage for various types of prime mover.

In some applications, the level of reverse power in the case of prime mover failure may fluctuate. This may be the case for a failed diesel engine. To prevent cyclic initiation and reset of the main trip timer, and consequent failure to trip, an adjustable reset time delay is provided (**Power1 DO Timer/Power2 DO Timer**). This delay would need to be set longer than the period for which the reverse power could fall below the power setting (**P<1 Setting/Sen P<1 Setting**). This setting needs to be taken into account when setting the main trip time delay.

Note	*A delay on reset in excess of half the period of any system power swings could result in operation of the reverse power protection during swings.*

Reverse power protection may also be used to interlock the opening of the generator set circuit breaker for 'non-urgent' tripping, as discussed in section 2.18.1. Reverse power interlocks are preferred over low forward power interlocks by some utilities.

A reverse power element may also be used to detect a loss of mains or loss of grid condition for applications where the distributed generator is not allowed to export power to the system.

2.5.2.1 Reverse Power Setting Guideline

Each stage of power protection can be selected to operate as a reverse power stage by selecting the **Power1 Function/Sen Power1 Func** or **Power2 Function/Sen Power2 Func** cell to **Reverse**.

The power threshold setting of the reverse power protection, **-P>1 Setting/Sen -P>1 Setting** or **-P>2 Setting/Sen -P>2 Setting**, should be less than 50% of the motoring power, typical values for the level of reverse power for generators are given in previous table.

For applications to detect the loss of the prime mover or for applications to provide interlocking of non-urgent trips the reverse power protection operating mode should be set to **Generating**.

The reverse power protection function should be time-delayed to prevent false trips or alarms being given during power system disturbances or following synchronization.

A time delay setting, **Power1 TimeDelay/Sen Power1 Delay** or **Power2 TimeDelay/Sen Power2 Delay** of 5 s should be applied typically.

The delay on reset timer, **Power1 DO Timer** or **Power2 DO Timer**, would normally be set to zero. When settings of greater than zero are used for the reset time delay, the pick up time delay setting may need to be increased to ensure that false tripping does not result in the event of a stable power swinging event.

When required for loss of mains or loss of grid applications where the distributed generator is not allowed to export power to the system, the threshold setting of the reverse power protection function, **-P>1 Setting/Sen -P>1 Setting** or **-P>2 Setting/Sen -P>2 Setting** should be set to a sensitive value, typically <2% of the rated power. The reverse power protection function should be time-delayed, as described above, to prevent false trips or alarms being given during power system disturbances or following synchronization, a typical time delay is 5 s.

2.5.3 Overpower Protection

The overpower protection can be used as overload indication, as a back-up protection for failure of governor and control equipment, and would be set above the maximum power rating of the machine.

2.5.3.1 Overpower Setting Guideline

Each stage of power protection can be selected to operate as an overpower stage by selecting the **Power1 Function/Sen Power1 Func** or **Power2 Function/Sen Power2 Func** cell to **Over**.

The power threshold setting of the overpower protection, **P>1 Setting/Sen P>1 Setting** or **P>2 Setting/Sen P>2 Setting**, should be set greater than the machine full load rated power.

A time delay setting, **Power1 TimeDelay/Sen Power1 Delay** or **Power2 TimeDelay/Sen Power2 Delay** should be applied.

The operating mode should be set to **Motoring** or **Generating** depending on the operating mode of the machine.

The delay on reset timer, **Power1 DO Timer** or **Power2 DO Timer**, would normally be set to zero.

2.6 Overcurrent Protection (50/51)

Overcurrent relays are the most commonly used protective devices in any industrial or distribution power system. They provide main protection to both feeders and busbars when unit protection is not used. They are also commonly applied to provide back-up protection when unit systems, such as pilot wire schemes, are used.

By a combination of time delays and relay pick-up settings, overcurrent relays may be applied to either feeders or power transformers to provide discriminative phase fault protection (and also earth fault protection if system earth fault levels are sufficiently high). In such applications, the various overcurrent relays on the system are coordinated with one another such that the relay nearest to the fault operates first. This is referred to as cascade operation because if the relay nearest to the fault does not operate, the next upstream relay will trip in a slightly longer time.

Various methods are available to achieve correct relay co-ordination on a system; by means of time alone, current alone or a combination of both time and current. Grading by means of current is only possible where there is an appreciable difference in fault level between the two relay locations. Grading by time is used by some utilities but can often lead to excessive fault clearance times at or near source substations where the fault level is highest. For these reasons the most commonly applied characteristic in coordinating overcurrent relays is the Inverse Definite Minimum Time (IDMT) type.

There are a few application considerations to make when applying overcurrent relays.

2.6.1 Transformer Magnetising Inrush

When applying overcurrent protection to the HV side of a power transformer, it is usual to apply a high set instantaneous overcurrent element, in addition to the time delayed low-set, to reduce fault clearance times for HV fault conditions. Typically, this will be set to approximately 1.3 times the LV fault level, such that it will only operate for HV faults. A 30% safety margin is sufficient due to the low transient overreach of the third and fourth overcurrent stages. Transient overreach defines the response of a relay to DC components of fault current and is quoted as a percentage. A relay with a low transient overreach will be largely insensitive to a DC offset and may therefore be set more closely to the steady state AC waveform.

The second requirement for this element is that it should remain inoperative during transformer energization, when a large primary current flows for a transient period. In most applications, the requirement to set the relay above the LV fault level will automatically result in settings that will be above the level of magnetizing inrush current.

Due to the nature of operation of the third and fourth overcurrent stages in the P341 relays, it is possible to apply settings corresponding to 35% of the peak inrush current, whilst maintaining stability for the condition.

This is important where low-set instantaneous stages are used to initiate auto-reclose equipment. In such applications, the instantaneous stage should not operate for inrush conditions, which may arise from small teed-off transformer loads for example. However, the setting must also be sensitive enough to provide fast operation under fault conditions.

Where an instantaneous element is required to accompany the time delayed protection, as described above, the third or fourth overcurrent stage of the P341 relay should be used, as they have wider setting ranges.

2.6.2 Application of Timer Hold Facility

This feature may be useful in certain applications, for example when grading with electromechanical overcurrent relays which have inherent reset time delays. It will also enable the element to become sensitive to a pole slipping condition where the element will cyclically operate as the machine slips successive poles.

Another situation where the timer hold facility may be used to reduce fault clearance times is where intermittent faults may be experienced. An example of this may occur in a plastic insulated cable. In this application it is possible that the fault energy melts and reseals the cable insulation, thereby extinguishing the fault. This process repeats to give a succession of fault current pulses, each of increasing duration with reducing intervals between the pulses, until the fault becomes permanent.

When the reset time of the overcurrent relay is instantaneous the relay will be repeatedly reset and not be able to trip until the fault becomes permanent. By using the timer hold facility the relay will integrate the fault current pulses, thereby reducing fault clearance time.

2.6.3 Setting Guidelines for Overcurrent Protection

The first and second stage of overcurrent protection can be selected by setting **I>1/2 Function** to any of the inverse or DT settings. The first and second stage is disabled if **I>1/2 Function** is set to **Disabled**.

The first or second stage can provide back-up protection for faults on the generator and the system. As such it should be coordinated with downstream protection to provide discrimination for system faults, setting the current threshold (**I>1/2 Current Set**), and the time delay.

I>1 TMS	For IEC curves;
I>1 Time Dial	For US/IEEE curves;
I>1 Time Delay	For definite time accordingly.

To provide back-up protection for the generator and system, the element must be supplied from CTs connected in the generator neutral. If terminal end CTs are used, the element will provide protection for the system only, unless the generator is connected in parallel to a second source of supply.

The third and fourth stages of overcurrent protection can be enabled by setting **I>3/4 Function** to **DT**, providing a definite time operating characteristic. The third and fourth stages are disabled if **I>3/4 Function** is set to **Disabled**. For machine applications where terminal CTs are used, the third or fourth stage can be set as an instantaneous overcurrent protection, providing protection against internal faults on the machine. The current setting of the third or fourth stage, **I>3/4 Current Set**, could be set to 120% of the maximum fault rating of the generator, typically 8 x full load current. The operating time, **I>3/4 Time Delay**, should be set to 0 s to give instantaneous operation. The stage will therefore be stable for external faults where the fault current from the generator will be below the stage current setting. For faults within the machine, the fault current will be supplied from the system and will be above the second stage current setting, resulting in fast clearance of the internal fault.

When applying the overcurrent protection provided in the P341 relay, standard principles should be applied in calculating the necessary current and time settings for coordination. The setting example detailed below shows a typical setting calculation and describes how the settings are actually applied to the relay.

Assume the following parameters for a relay feeding an LV switchboard:

CT Ratio = 500/1

Full Load Current of circuit = 450 A

Slowest downstream protection = 100 A Fuse

The current setting employed on the P341 relay must account for both the maximum load current and the reset ratio of the relay itself:

I> must be greater than: 450/0.95 = 474 A

The P341 relay allows the current settings to be applied to the relay in either primary or secondary quantities. Programming the **Setting Values** cell of the **CONFIGURATION** column to either **Primary** or **Secondary** does this. When this cell is set to primary, all phase overcurrent setting values are scaled by the programmed CT ratio. This is found in column 0A of the relay menu, entitled **VT & CT RATIOS** where cells **Phase CT Primary** and **Phase CT Sec'y** can be programmed with the primary and secondary CT ratings, respectively.

In this example, assuming primary currents are to be used, the ratio should be programmed as 500/1.

The required setting is therefore 0.95 A in terms of secondary current or 475 A in terms of primary.

A suitable time delayed characteristic will now need to be chosen. When coordinating with downstream fuses, the applied relay characteristic should be closely matched to the fuse characteristic. Therefore assuming IDMT coordination is to be used, an Extremely Inverse (EI) characteristic would normally be chosen. As previously described, this is found under **I>1 Function** and should therefore be programmed as **IEC E Inverse**.

Finally, a suitable Time Multiplier Setting (TMS) must be calculated and entered in cell **I>1 TMS**.

For more detailed information regarding overcurrent relay coordination, reference should be made to the 'Protective Relay Application Guide' - Chapter 9 or 'Network Protection and Automation Guide' - Chapter 9. For more detailed information regarding the application of rectifier inverse time/current characteristic, see the P14x Applications Notes chapter, *P14x/EN AP*.

2.7 Directional Overcurrent Protection

If fault current can flow in both directions through a relay location, it is necessary to add directionality to the overcurrent relays in order to obtain correct coordination. Typical systems that require such protection are parallel feeders (both plain and transformer) and ring main systems, each of which are relatively common in distribution networks.

Two common applications, which require the use of directional relays, are considered in the following sections.

2.7.1 Parallel Feeders

Figure 9 shows a typical distribution system utilizing parallel power transformers. In such an application, a fault at 'F' could result in the operation of both R3 and R4 relays and the subsequent loss of supply to the 11 kV busbar. Hence, with this system configuration, it is necessary to apply directional relays at these locations set to "look into" their respective transformers. These relays should coordinate with the non-directional relays, R1 and R2; hence ensuring discriminative relay operation during such fault conditions.

In such an application, relays R3 and R4 may commonly require non-directional overcurrent protection elements to provide protection to the 11 kV busbar, in addition to providing a back-up function to the overcurrent relays on the outgoing feeders (R5).

When applying the P341 relays in the above application, stage 1 of the overcurrent protection of relays R3 and R4 would be set non-directional and time graded with R5, using an appropriate time delay characteristic. Stage 2 could then be set directional, looking back into the transformer, also having a characteristic which provided correct coordination with R1 and R2. IDMT or DT characteristics are selectable for both stages 1 and 2 and directionality of each of the overcurrent stages is set in cell **I> Direction**.

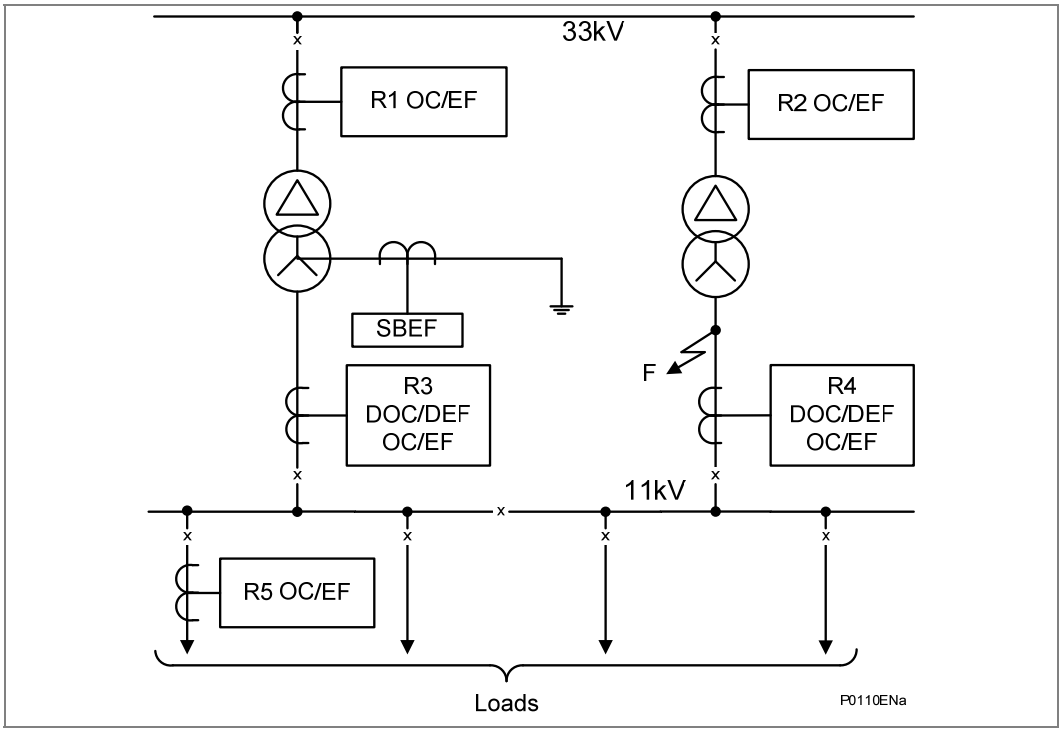

Figure 9 - Typical distribution system using parallel transformers

Note	*The principles previously outlined for the parallel transformer application are equally applicable for plain feeders which are operating in parallel.*

2.7.2 Ring Main Arrangements

A particularly common arrangement within distribution networks is the ring main circuit. The primary reason for its use is to maintain supplies to consumers in the event of fault conditions occurring on the interconnecting feeders. A typical ring main with associated overcurrent protection is shown in Figure 10.

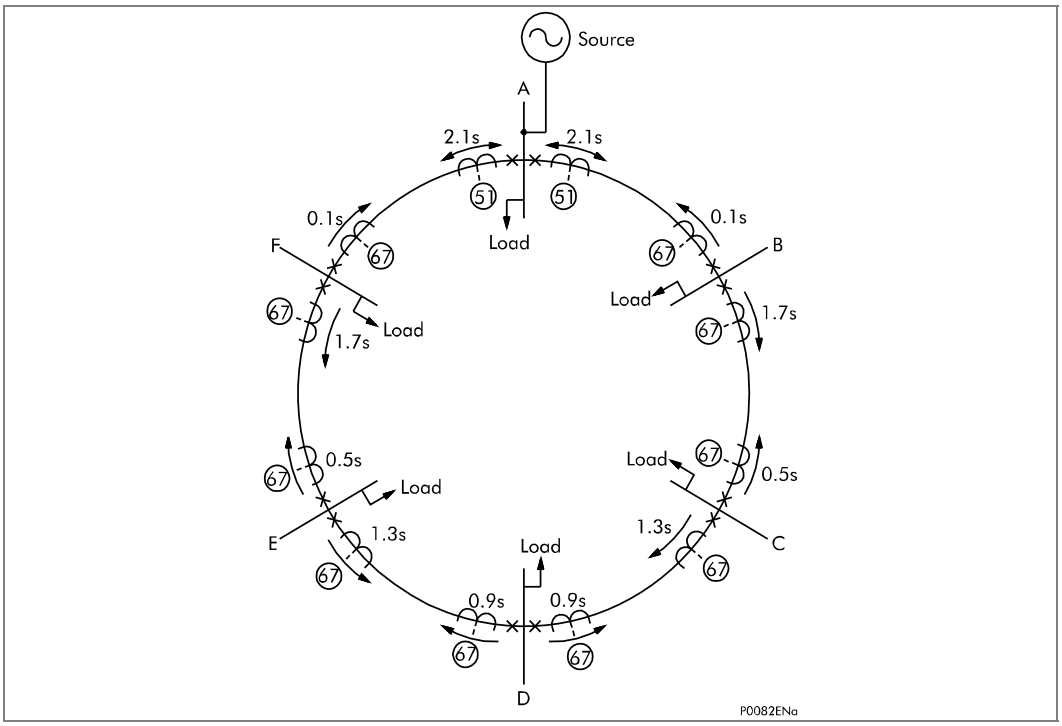

Figure 10 - Typical ring main with associated overcurrent protection

As with the previously described parallel feeder arrangement, it can be seen that current may flow in either direction through the various relay locations. Therefore directional overcurrent relays are again required in order to provide a discriminative protection system.

The normal grading procedure for overcurrent relays protecting a ring main circuit is to open the ring at the supply point and to grade the relays first clockwise and then anti-clockwise. The arrows shown at the various relay locations in Figure 10 depict the direction for forward operation of the respective relays, i.e. in the same way as for parallel feeders; the directional relays are set to look into the feeder that they are protecting. Figure 10 shows typical relay time settings (if definite time coordination was employed), from which it can be seen that any faults on the interconnectors between stations are cleared discriminatively by the relays at each end of the feeder.

Again, any of the four overcurrent stages may be configured to be directional and coordinated as per the previously outlined grading procedure, noting that IDMT characteristics are only selectable on the first two stages.

2.7.3 Synchronous Polarization

For a fault condition that occurs close to the relaying point, the faulty phase voltage will reduce to a value close to zero volts. For single or double phase faults, there will always be at least one healthy phase voltage present for polarization of the phase overcurrent elements. For example, a close up A to B fault condition will result in the collapse of the A and B phase voltages. However, the A and B phase elements are polarized from VBC and VCA respectively. As such a polarizing signal will be present, allowing correct relay operation.

For a close up three phase fault, all three voltages will collapse to zero and no healthy phase voltages will be present. For this reason, the P341 relays include a synchronous polarization feature that stores the pre-fault voltage information and continues to apply it to the DOC elements for a time period of 3.2 seconds. This ensures that either instantaneous or time delayed DOC elements will be allowed to operate, even with a three phase voltage collapse.

2.7.4 Setting Guidelines

The applied current settings for directional overcurrent relays are dependent upon the application in question. In a parallel feeder arrangement, load current is always flowing in the non-operate direction. Hence, the relay current setting may be less than the full load rating of the circuit; typically 50% of In.

The minimum setting that may be applied has to take into account the thermal rating of the relay. Some electro-mechanical directional overcurrent relays have continuous withstand ratings of only twice the applied current setting and hence 50% of rating was the minimum setting that could be applied. With the P341, the continuous current rating is 4 x rated current and so it is possible to apply much more sensitive settings, if required. However, there are minimum safe current setting constraints to be observed when applying directional overcurrent protection at the receiving-ends of parallel feeders. The minimum safe settings to ensure that there is no possibility of an unwanted trip during clearance of a source fault are as follows for linear system load:

Parallel plain feeders:

Set>50% Prefault load current

Parallel transformer feeders:

Set>87% Prefault load current

When the above setting constraints are infringed, independent-time protection is more likely to issue an unwanted trip during clearance of a source fault than dependent-time protection.

Where the above setting constraints are unavoidably infringed, secure phase fault protection can be provided with relays which have 2-out-of-3 directional protection tripping logic.

A common minimum current setting recommendation (50% relay rated current) would be virtually safe for plain parallel feeder protection as long as the circuit load current does not exceed 100% relay rated current. It would also be safe for parallel transformer feeders, if the system design criterion for two feeders is such that the load on each feeder will never exceed 50% rated current with both feeders in service. For more than two feeders in parallel the 50% relay rated current setting may not be absolutely safe.

In a ring main application, it is possible for load current to flow in either direction through the relaying point. Hence, the current setting must be above the maximum load current, as in a standard non-directional application.

The required characteristic angle settings for directional relays will differ depending on the exact application in which they are used. Recommended characteristic angle settings are as follows:

- Plain feeders, or applications with an earthing point (zero sequence source) behind the relay location, should utilize a +30º RCA setting.
- Transformer feeders, or applications with a zero sequence source in front of the relay location, should utilize a +45º RCA setting.

On the P341 relay, it is possible to set characteristic angles anywhere in the range -95º to +95º. While it is possible to set the RCA to exactly match the system fault angle, it is recommended that the above guidelines are adhered to, as these settings have been shown to provide satisfactory performance and stability under a wide range of system conditions.

2.8 Negative Phase Sequence (NPS) Overcurrent Protection (46)

When applying traditional phase overcurrent protection, the overcurrent elements must be set higher than maximum load current, thereby limiting the element's sensitivity. Most protection schemes also use an earth fault element, which improves sensitivity for earth faults. However, certain faults may arise which can remain undetected by such schemes.

Any unbalanced fault condition will produce negative sequence current of some magnitude. Therefore a negative phase sequence overcurrent element can operate for both phase-phase and phase-earth faults.

The following section describes how negative phase sequence overcurrent protection may be applied in conjunction with standard overcurrent and earth fault protection in order to alleviate some less common application difficulties.

- Negative phase sequence overcurrent elements give greater sensitivity to resistive phase to phase faults, where phase overcurrent elements may not operate. Voltage dependent overcurrent and underimpedance protection is commonly used to provide more sensitive back-up protection for system phase faults on a generator than simple overcurrent protection. However, negative phase sequence overcurrent protection can also be used to provide sensitive back-up protection for phase-phase faults.

Note	*NPS overcurrent protection will not provide any system back-up protection for three-phase faults.*

- In certain applications, residual current may not be detected by an earth fault relay due to the system configuration. For example, an earth fault relay applied on the delta side of a delta-star transformer is unable to detect earth faults on the star side.

However, negative sequence current will be present on both sides of the transformer for any fault condition, irrespective of the transformer configuration. Therefore a negative phase sequence overcurrent element may be employed to provide time-delayed back-up protection for any uncleared asymmetrical faults downstream.

- For rotating machines a large amount of negative phase sequence current can be a dangerous condition for the machine due to its heating effect on the rotor. Therefore, a negative phase sequence overcurrent element may be applied to provide back-up protection to the negative phase sequence thermal protection that is normally applied to a rotating machine, see section 2.15 of the P34x Application Notes chapter, *P34x/EN AP*.
- It may be required to simply alarm for the presence of negative phase sequence currents on the system. Operators may then investigate the cause of the unbalance.

2.8.1 Setting Guidelines for NPS Overcurrent Protection

The current pick-up threshold must be set higher than the negative phase sequence current due to the maximum normal load unbalance on the system. This can be set practically at the commissioning stage, making use of the relay measurement function to display the standing negative phase sequence current, and setting at least 20% above this figure.

Where the negative phase sequence element is required to operate for specific uncleared asymmetric faults, a precise threshold setting would have to be based upon an individual fault analysis for that particular system due to the complexities involved. However, to ensure operation of the protection, the current pick-up setting must be set approximately 20% below the lowest calculated negative phase sequence fault current contribution to a specific remote fault condition.

Note	*In practice, if the required fault study information is unavailable, the setting must adhere to the minimum threshold previously outlined, employing a suitable time delay for coordination with downstream devices, this is vital to prevent unnecessary interruption of the supply resulting from inadvertent operation of this element.*

As stated above, correct setting of the time delay for this function is vital. It should also be noted that this element is applied primarily to provide back-up protection to other protective devices or to provide an alarm. Hence, in practice, it would be associated with a long time delay if used to provide back-up protection or an alarm. Where the protection is used for back-up protection or as an alarm it must be ensured that the time delay is set greater than the operating time of any other protective device (at minimum fault level) on the system which may respond to unbalanced faults, such as:

- Phase overcurrent elements
- Earth fault elements
- System back-up protection - voltage dependent overcurrent/underimpedance
- Broken conductor elements
- Negative phase sequence influenced thermal elements

2.8.2 Directionalizing the Negative Phase Sequence Overcurrent Element

To determine if a phase-phase or phase-earth fault is internal or external to the machine directional control of the element should be employed.

Directionality is achieved by comparison of the angle between the inverse of the negative phase sequence voltage (-V2) and the negative phase sequence current (I2). The element may be selected to operate in either the forward or reverse direction. A suitable relay characteristic angle setting (**I2> Char Angle**) is chosen to provide optimum performance. This setting should be set equal to the phase angle of the negative sequence current with respect to the inverted negative sequence voltage (-V2), in order to be at the center of the directional characteristic.

The angle that occurs between V2 and I2 under fault conditions is directly dependent upon the negative sequence source impedance of the system. However, typical settings for the element are as follows:

- For a transmission system the RCA should be set equal to -60°.
- For a distribution system the RCA should be set equal to -45°.

For the negative phase sequence directional elements to operate, the relay must detect a polarizing voltage above a minimum threshold, **I2> V2pol Set**. This must be set in excess of any steady state negative phase sequence voltage. This may be determined during the commissioning stage by viewing the negative phase sequence measurements in the relay.

2.9 Earth Fault Protection (50N/51N)

The fact that both earth fault (derived) and sensitive earth fault elements may be enabled in the relay at the same time leads to a number of applications advantages. For example, the parallel transformer application previously shown in Figure 9 requires directional earth fault protection at locations R3 and R4, to provide discriminative protection. However, in order to provide back-up protection for the transformer, busbar and other downstream earth fault devices, StandBy Earth Fault (SBEF) protection is also commonly applied. This function has traditionally been fulfilled by a separate earth fault relay, fed from a single CT in the transformer earth connection. The earth fault and sensitive earth fault elements of the P341 relay may be used to provide both the Directional Earth Fault (DEF) and SBEF functions, respectively.

Note	*The sensitive earth fault dynamic range is 0-2 In and so can only be used on resistance earthed systems.*

Where a Neutral Earthing Resistor (NER) is used to limit the earth fault level to a particular value, it is possible that an earth fault condition could cause a flashover of the NER and hence a dramatic increase in the earth fault current. For this reason, it may be appropriate to apply two stage SBEF protection. The first stage should have suitable current and time characteristics which coordinate with downstream earth fault protection. The second stage may then be set with a higher current setting but with zero time delay; hence providing fast clearance of an earth fault which gives rise to an NER flashover. The remaining two stages are available for customer specific applications.

The previous examples relating to transformer feeders utilize both earth fault and sensitive earth fault elements. In a standard feeder application requiring three-phase overcurrent and earth fault protection, only one of the earth fault elements would need to be applied.

2.9.1 Sensitive Earth Fault (SEF) Protection Element

Sensitive Earth Fault (SEF) would normally be fed from a Core Balance Current Transformer (CBCT) mounted around the three phases of the feeder cable. However, care must be taken in the positioning of the CT with respect to the earthing of the cable sheath. See Figure 11 below:

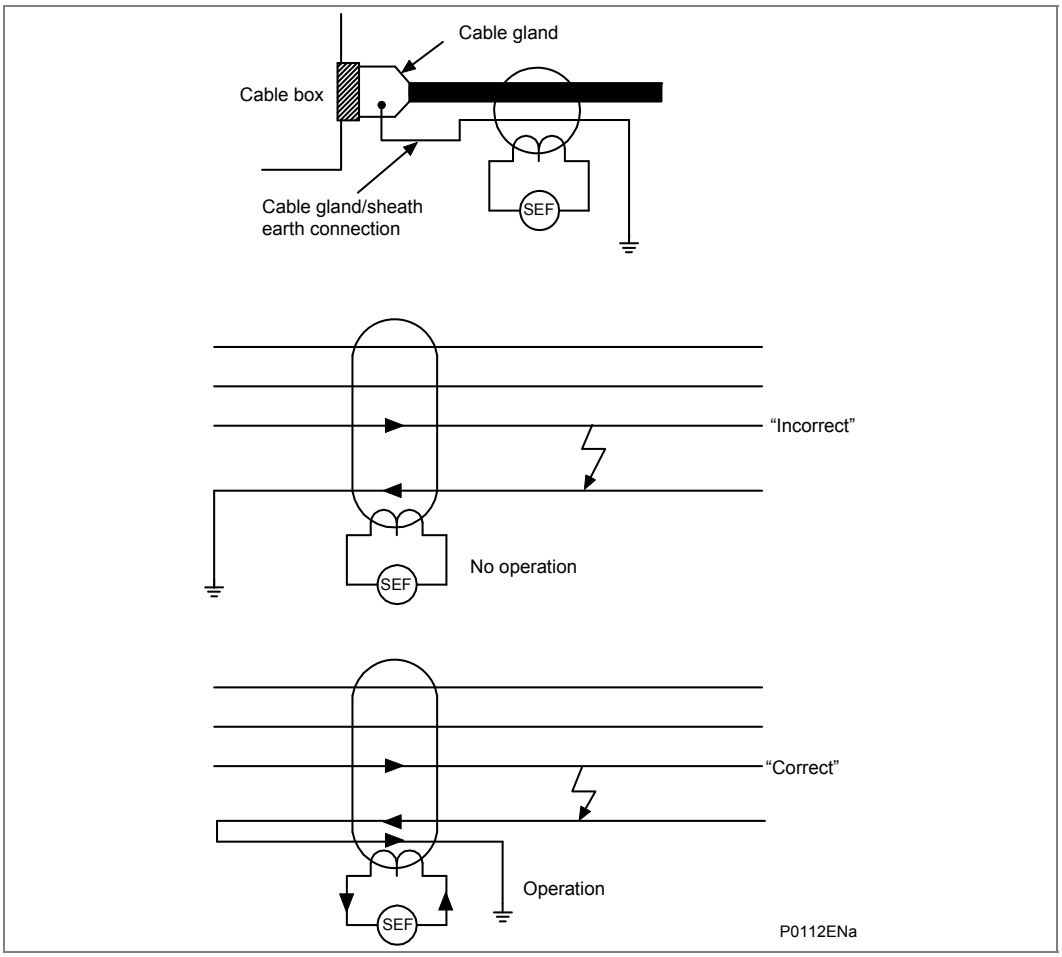

Figure 11 - Positioning of core balance current transformers

If the cable sheath is terminated at the cable gland and earthed directly at that point, a cable fault (from phase to sheath) will not result in any unbalance current in the core balance CT. Prior to earthing, the connection must be brought back through the CBCT and earthed on the feeder side. This ensures correct relay operation during earth fault conditions.

2.10 Directional Earth Fault (DEF) Protection (67N)

Each of the four stages of standard earth fault protection and SEF protection may be set to be directional if required. Consequently, as with the application of directional overcurrent protection, a voltage supply is required by the relay to provide the necessary polarization.

With the standard earth fault protection element in the P341 relay, two options are available for polarization; Residual Voltage or Negative Sequence.

2.10.1 General Setting Guidelines for DEF

When setting the Relay Characteristic Angle (RCA) for the directional overcurrent element, a positive angle setting was specified. This was due to the fact that the quadrature polarizing voltage lagged the nominal phase current by 90º i.e. the position of the current under fault conditions was leading the polarizing voltage and hence a positive RCA was required. With DEF, the residual current under fault conditions lies at an angle lagging the polarizing voltage. Hence, negative RCA settings are required for DEF applications. This is set in cell **I>Char Angle** in the relevant earth fault menu.

The following angle settings are recommended for a residual voltage polarized relay:

Resistance earthed systems ⇒ 0º

Distribution systems (solidly earthed) ⇒ -45º

Transmission Systems (solidly earthed) ⇒ -60º

For negative sequence polarization, the RCA settings must be based on the angle of the NPS source impedance, much the same as for residual polarizing. Typical settings would be:

Distribution systems ⇒ -45º

Transmission Systems ⇒ -60º

2.10.2 Application to Insulated Systems

The advantage gained by running a power system which is insulated from earth is the fact that during a single phase to earth fault condition, no earth fault current is allowed to flow. Consequently, it is possible to maintain power flow on the system even when an earth fault condition is present. However, this advantage is offset by the fact that the resultant steady state and transient overvoltages on the sound phases can be very high. It is generally the case, therefore, that insulated systems will only be used in low/medium voltage networks where it does not prove too costly to provide the necessary insulation against such overvoltages. Higher system voltages would normally be solidly earthed or earthed via a low impedance.

Operational advantages may be gained by the use of insulated systems. However, it is still vital that detection of the fault is achieved. This is not possible by means of standard current operated earth fault protection. One possibility for fault detection is by means of a residual overvoltage device. This functionality is included within the P341 relays and is detailed in section 2.12. However, fully discriminative earth fault protection on this type of system can only be achieved by the application of a sensitive earth fault element. This type of relay is set to detect the resultant imbalance in the system charging currents that occurs under earth fault conditions. It is therefore essential that a core balance CT is used for this application. This eliminates the possibility of spill current that may arise from slight mismatches between residually connected line CT's. It also enables a much lower CT ratio to be applied, thereby allowing the required protection sensitivity to be more easily achieved.

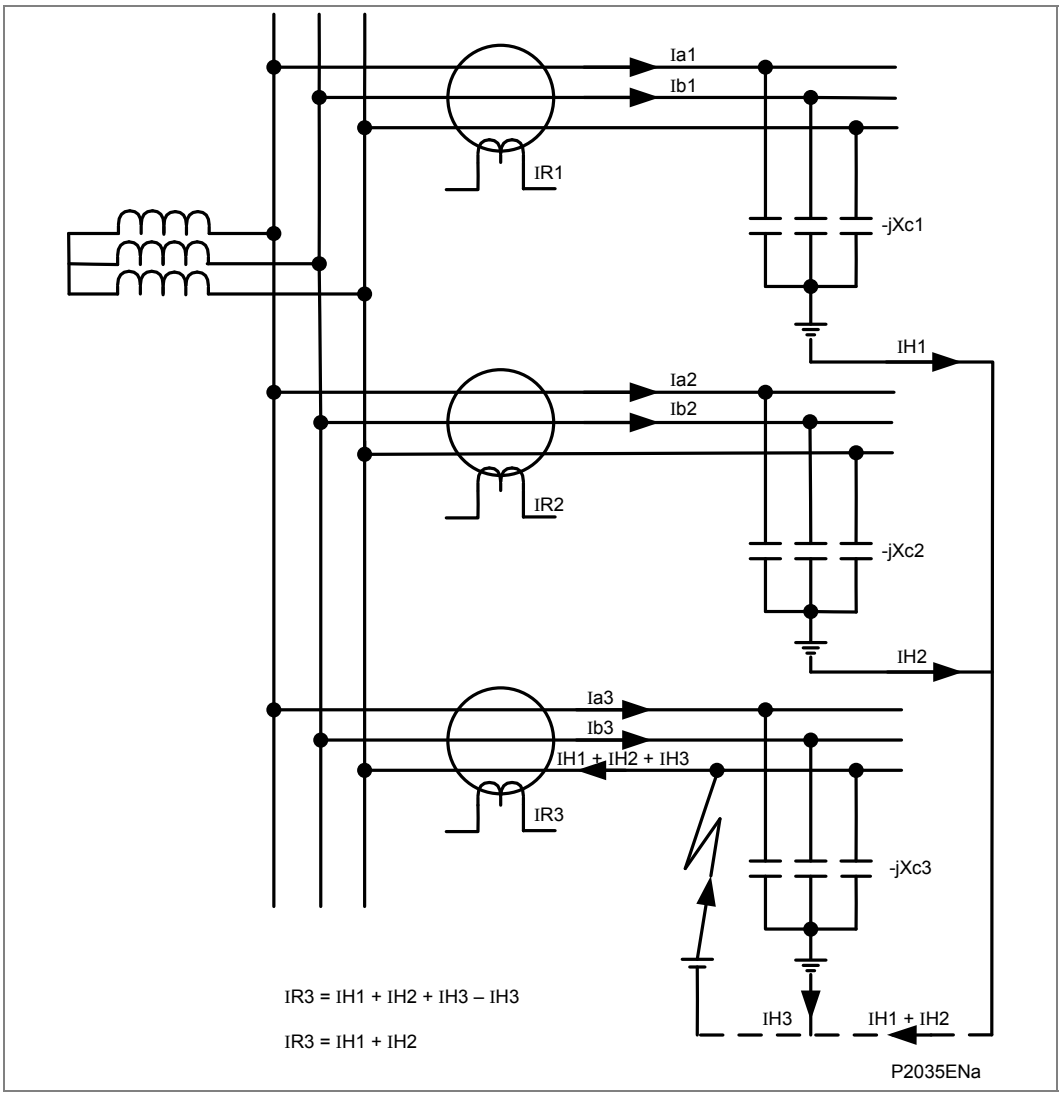

Figure 12 - Current distribution in an insulated system with C phase fault

Figure 12 shows that the relays on the healthy feeders see the unbalance in the charging currents for their own feeder. The relay on the faulted feeder, however, sees the charging current from the rest of the system (IH1 and IH2 in this case), with its own feeders charging current (IH3) becoming cancelled out. This is shown by the phasor diagrams shown in Figure 13.

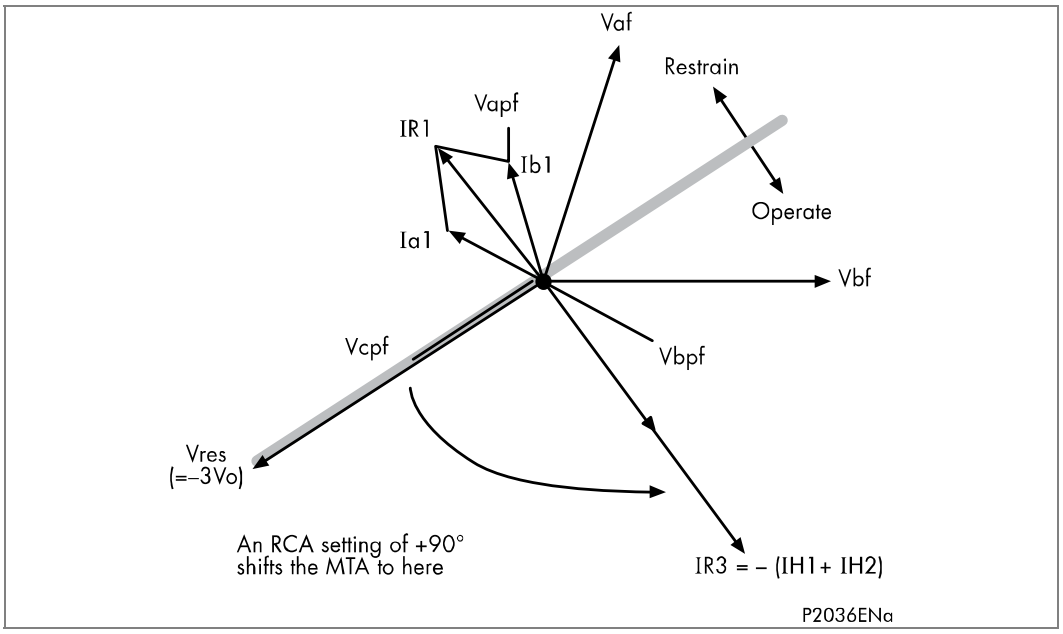

Figure 13 - Phasor diagrams for insulated system with C phase fault

Referring to the phasor diagram, it can be seen that the C phase to earth fault causes the voltages on the healthy phases to rise by a factor of √3. The A phase charging current (Ia1), is then shown to be leading the resultant A phase voltage by 90º. Likewise, the B phase charging current leads the resultant Vb by 90º.

The unbalance current detected by a core balance current transformer on the healthy feeders can be seen to be the vector addition of Ia1 and Ib1, giving a residual current which lies at exactly 90º lagging the polarizing voltage (-3Vo). As the healthy phase voltages have risen by a factor of √3, the charging currents on these phases will also be √3 times larger than their steady state values. Therefore the magnitude of residual current, IR1, is equal to 3 x the steady state per phase charging current.

The phasor diagrams indicate that the residual currents on the healthy and faulted feeders, IR1 and IR3 respectively, are in anti-phase. A directional element could therefore be used to provide discriminative earth fault protection.

If the polarizing voltage of this element, equal to -3Vo, is shifted through +90º, the residual current seen by the relay on the faulted feeder will lie within the operate region of the directional characteristic and the current on the healthy feeders will fall within the restrain region.

As previously stated, the required characteristic angle setting for the SEF element when applied to insulated systems, is +90º. This recommended setting corresponds to the relay being connected such that its direction of current flow for operation is from the source busbar towards the feeder, as would be the convention for a relay on an earthed system. However, if the forward direction for operation was set as being from the feeder into the busbar, (which some utilities may standardize on), then a -90(RCA would be required. The correct relay connections to give a defined direction for operation are shown on the relay connection diagram.

Note	*Discrimination can be provided without the need for directional control. This can only be achieved if it is possible to set the relay in excess of the charging current of the protected feeder and below the charging current for the rest of the system.*

2.10.3 Setting Guidelines - Insulated Systems

As has been previously shown, the residual current detected by the relay on the faulted feeder is equal to the sum of the charging currents flowing from the rest of the system. Further, the addition of the two healthy phase charging currents on each feeder gives a total charging current which has a magnitude of three times the per phase value. Therefore, the total unbalance current detected by the relay is equal to three times the per phase charging current of the rest of the system. A typical relay setting may therefore be in the order of 30% of this value, i.e. equal to the per phase charging current of the remaining system. Practically though, the required setting may well be determined on site, where suitable settings can be adopted based upon practically obtained results. The use of the P140 relays' comprehensive measurement and fault recording facilities may prove useful in this respect.

2.10.4 Application to Petersen Coil Earthed Systems

Power systems are usually earthed in order to limit transient overvoltages during arcing faults and also to assist with detection and clearance of earth faults. Impedance earthing has the advantage of limiting damage incurred by plant during earth fault conditions and also limits the risk of explosive failure of switchgear, which is a danger to personnel. In addition, it limits touch and step potentials at a substation or in the vicinity of an earth fault.

If a high impedance device is used for earthing the system, or the system is unearthed, the earth fault current will be reduced but the steady state and transient overvoltages on the sound phases can be very high. Consequently, it is generally the case that high impedance earthing will only be used in low/medium voltage networks in which it does not prove too costly to provide the necessary insulation against such overvoltages. Higher system voltages would normally be solidly earthed or earthed via a low impedance.

A special case of high impedance earthing via a reactor occurs when the inductive earthing reactance is made equal to the total system capacitive reactance to earth at system frequency. This practice is widely referred to as Petersen (or resonant) Coil Earthing. With a correctly tuned system, the steady state earth fault current will be zero, so that arcing earth faults become self extinguishing. Such a system can, if designed to do so, be run with one phase earthed for a long period until the cause of the fault is identified and rectified. With the effectiveness of this method being dependent on the correct tuning of the coil reactance to the system capacitive reactance, an expansion of the system at any time would clearly necessitate an adjustment of the coil reactance. Such adjustment is sometimes automated.

Petersen Coil earthed systems are commonly found in areas where the power system consists mainly of rural overhead lines and can be particularly beneficial in locations which are subject to a high incidence of transient faults. Transient earth faults caused by lightning strikes, for example, can be extinguished by the Petersen Coil without the need for line outages.

Figure 14 shows a source of generation earthed through a Petersen Coil, with an earth fault applied on the A Phase. Under this situation, it can be seen that the A phase shunt capacitance becomes short circuited by the fault. Consequently, the calculations show that if the reactance of the earthing coil is set correctly, the resulting steady state earth fault current will be zero.

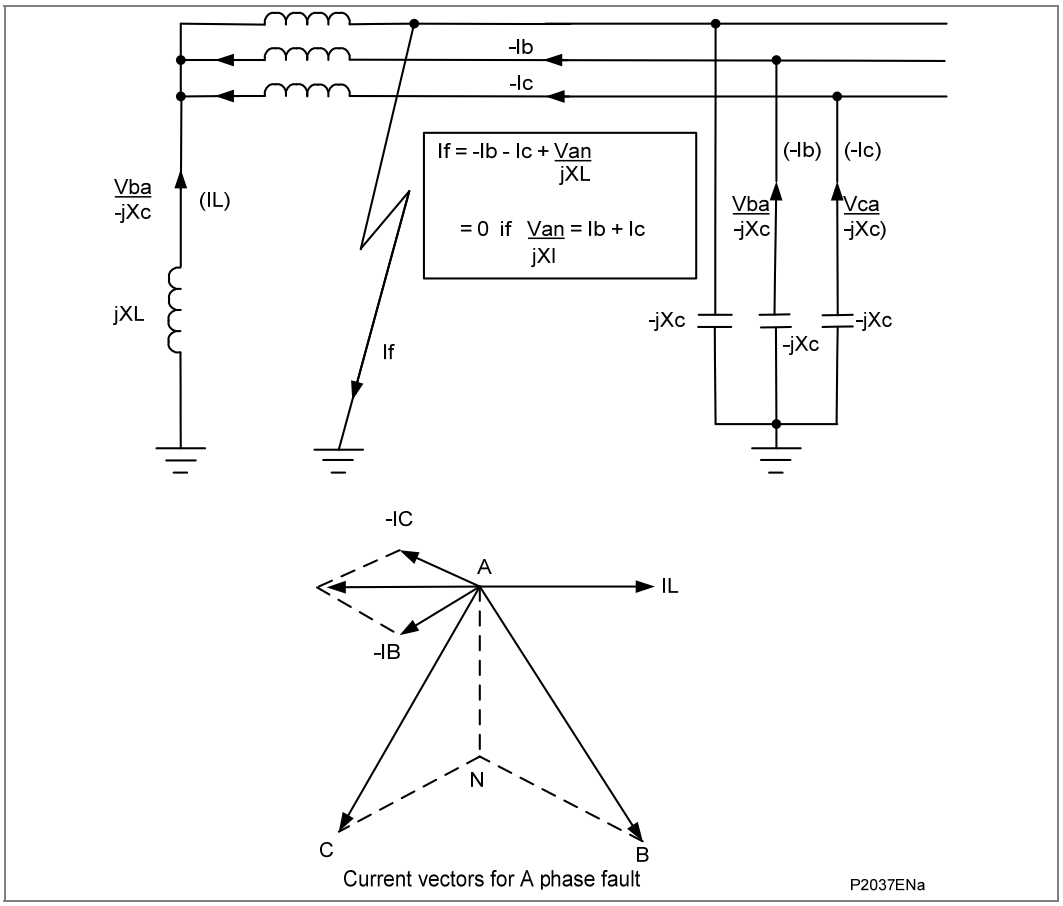

Figure 14 - Current distribution in Peterson Coil earthed system

Prior to actually applying protective relays to provide earth fault protection on systems which are earthed via a Petersen Coil, it is imperative to gain an understanding of the current distributions that occur under fault conditions on such systems. With this knowledge, it is then possible to decide on the type of relay that may be applied, ensuring that it is both set and connected correctly.

Figure 15 shows a radial distribution system having a source which is earthed via a Petersen Coil. Three outgoing feeders are present, the lower of which has a phase to earth fault applied on the C phase.

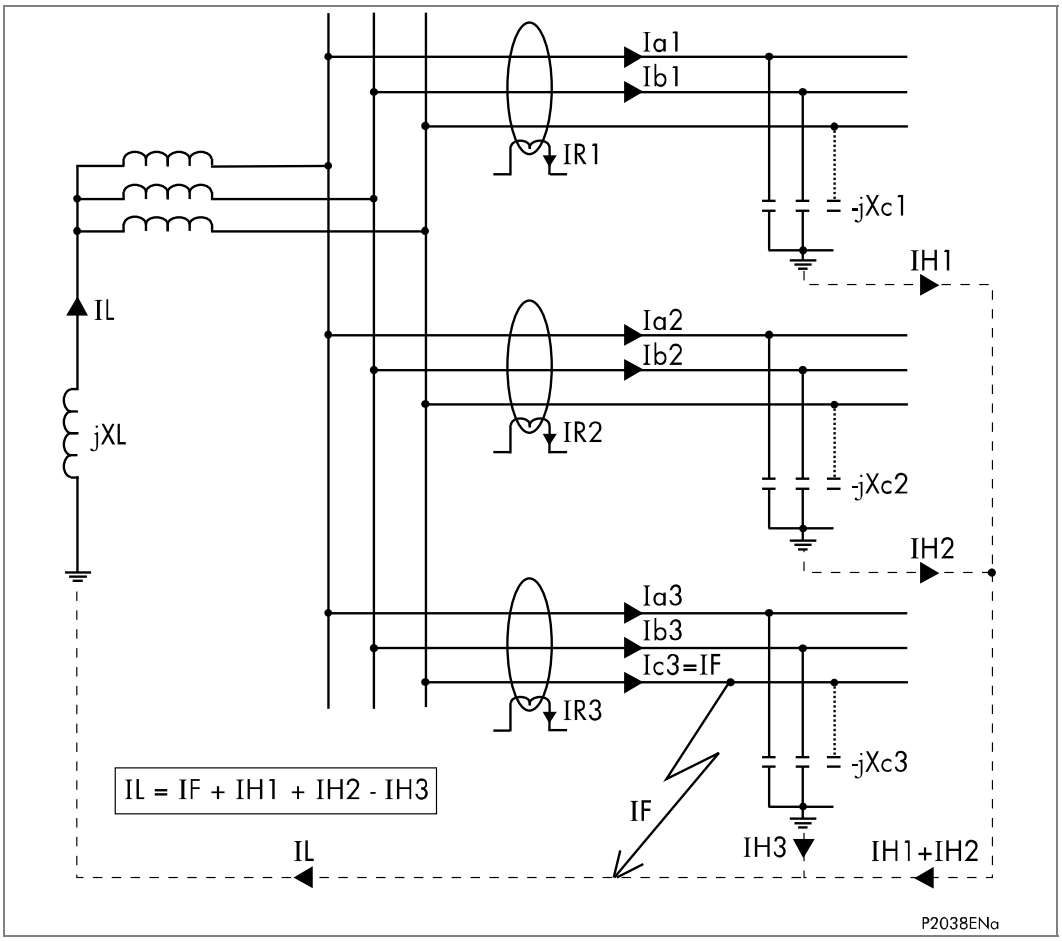

Figure 15 - Distribution of currents during a C phase to earth fault

Figure 16 (a, b and c) show vector diagrams for the previous system, assuming that it is fully compensated (i.e. coil reactance fully tuned to system capacitance), in addition to assuming a theoretical situation where no resistance is present either in the earthing coil or in the feeder cables.

Referring to the vector diagram illustrated in Figure 16a, it can be seen that the C phase to earth fault causes the voltages on the healthy phases to rise by a factor of √3. The A phase charging currents (Ia1, Ia2 and Ia3), are then shown to be leading the resultant A phase voltage by 90° and likewise for the B phase charging currents with respect to the resultant Vb.

The unbalance current detected by a core balance current transformer on the healthy feeders can be seen to be a simple vector addition of Ia1 and Ib1, giving a residual current which lies at exactly 90° lagging the residual voltage (Figure 16b). Clearly, as the healthy phase voltages have risen by a factor of √3, the charging currents on these phases will also be √3 times larger than their steady state values. Therefore, the magnitude of residual current, IR1, is equal to 3 x the steady state per phase charging current.

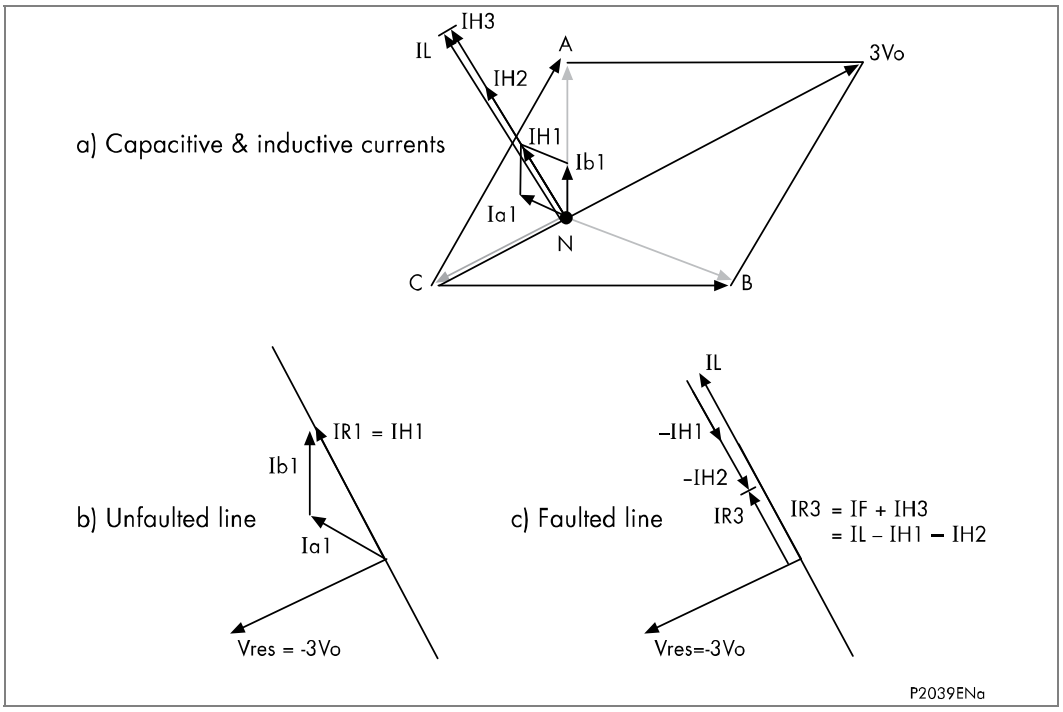

Figure 16 - Theoretical case - no resistance present in XL or Xc

Note	*The actual residual voltage used as a reference signal for directional earth fault relays is phase shifted by 180° and is therefore shown as -3Vo in the vector diagrams. This phase shift is automatically introduced in the relay. On the faulted feeder, the residual current is the addition of the charging current on the healthy phases (IH3) plus the fault current (IF). The net unbalance is therefore equal to IL-IH1-IH2, as shown in Figure 16c. This situation may be more readily observed by considering the zero sequence network for this fault condition. This is depicted in Figure 17.*

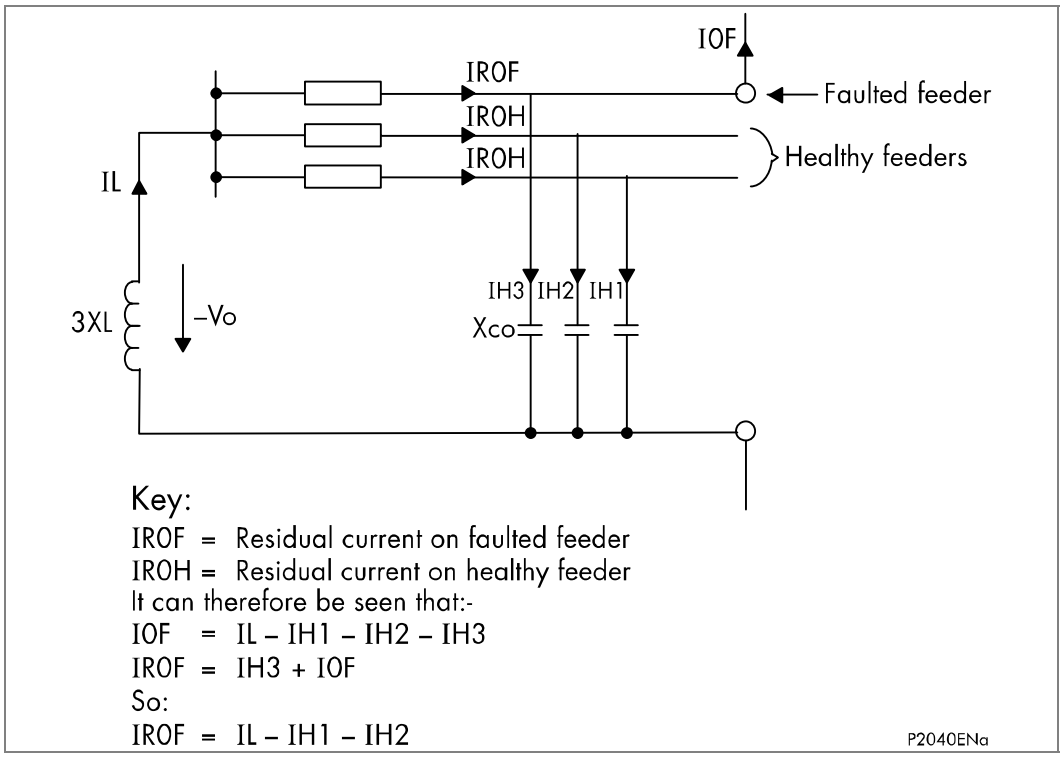

Figure 17 - Zero sequence network showing residual currents

In comparing the residual currents occurring on the healthy and on the faulted feeders (Figure 16b & Figure 16c), it can be seen that the currents would be similar in both magnitude and phase; hence it would not be possible to apply a relay which could provide discrimination.

However, as previously stated, the scenario of no resistance being present in the coil or feeder cables is purely theoretical. Further consideration therefore needs to be given to a practical application in which the resistive component is no longer ignored - consider Figure 18.

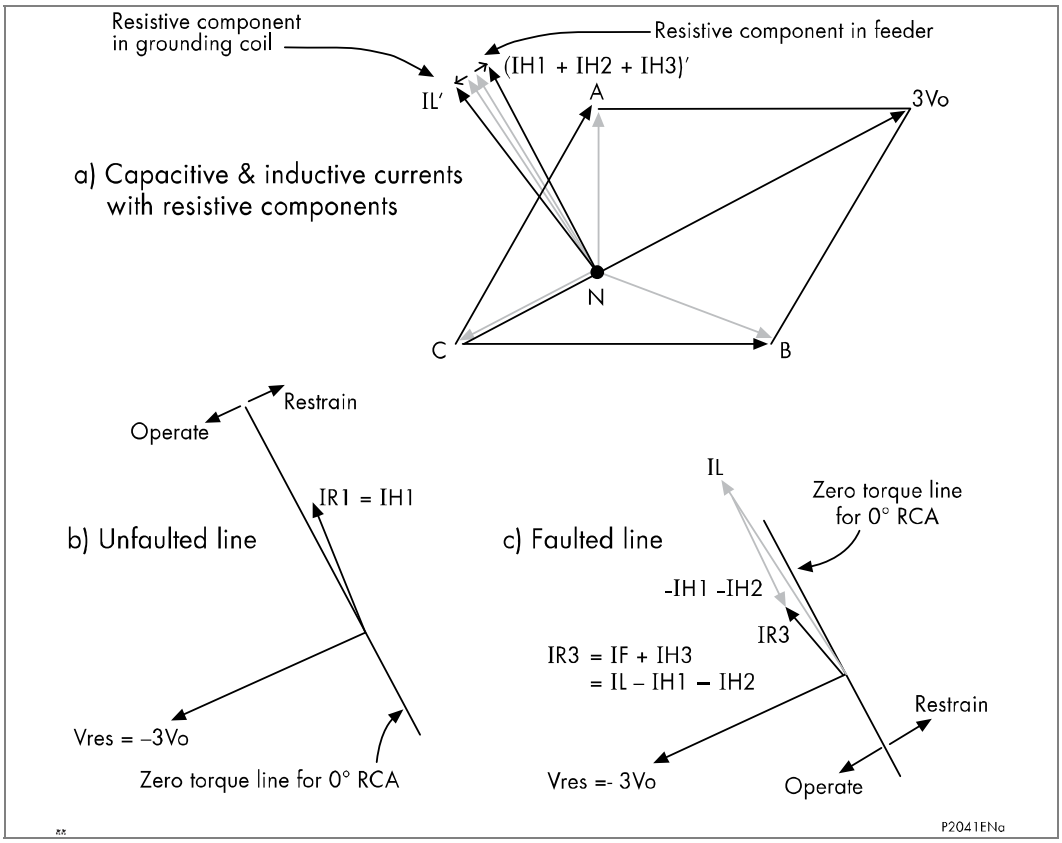

Figure 18 - Practical case: resistance present in XL and Xc

Figure 18a shows the relationship between the capacitive currents, coil current and residual voltage. Due to the presence of resistance in the feeders, the healthy phase charging currents are now leading their respective phase voltages by less than 90°. In a similar manner, the resistance present in the earthing coil has the effect of shifting the current, IL, to an angle less than 90° lagging. The result of these slight shifts in angles can be seen in Figure 18b and Figure 18c.

The residual current now appears at an angle in excess of 90° from the polarizing voltage for the unfaulted feeder and less than 90° on the faulted feeder. Hence, a directional relay having a characteristic angle setting of 0° (with respect to the polarizing signal of -3Vo) could be applied to provide discrimination, that is the healthy feeder residual current would appear within the restrain section of the characteristic but the residual current on the faulted feeder would lie within the operate region - as shown in Figure 18b and Figure 18c.

In practical systems, it may be found that a value of resistance is purposely inserted in parallel with the earthing coil. This serves two purposes; one is to actually increase the level of earth fault current to a more practically detectable level and the second is to increase the angular difference between the residual signals; again to aid in the application of discriminating protection.

2.10.5 Applications to Compensated Networks

2.10.5.1 Required Relay Current and Voltage Connections

Referring to the relevant application diagram for the P341 Relay, it should be applied such that it's direction for forward operation is looking down into the protected feeder (away from the busbar), with a 0° RCA setting.

As shown in the relay application diagram, it is usual for the earth fault element to be driven from a Core Balance Current Transformer (CBCT). This eliminates the possibility of spill current that may arise from slight mismatches between residually connected line CT's. It also enables a much lower CT ratio to be applied, thereby allowing the required protection sensitivity to be more easily achieved.

2.10.5.2 Calculation of Required Relay Settings

As has been previously shown, for a fully compensated system, the residual current detected by the relay on the faulted feeder is equal to the coil current minus the sum of the charging currents flowing from the rest of the system. Further, as stated in the previous section, the addition of the two healthy phase charging currents on each feeder gives a total charging current which has a magnitude of three times the steady state per phase value. Therefore for a fully compensated system, the total unbalance current detected by the relay is equal to three times the per phase charging current of the faulted circuit. A typical relay setting may therefore be in the order of 30% of this value, i.e. equal to the per phase charging current of the faulted circuit. Practically though, the required setting may well be determined on site, where system faults can be applied and suitable settings can be adopted based upon practically obtained results.

In most situations, the system will not be fully compensated and consequently a small level of steady state fault current will be allowed to flow. The residual current seen by the relay on the faulted feeder may therefore be a larger value, which further emphasizes the fact that relay settings should be based on practical current levels, wherever possible.

The above also holds true regarding the required Relay Characteristic Angle (RCA) setting. As has been shown earlier, a nominal RCA setting of 0º is required. However, fine-tuning of this setting will require to be carried out on site in order to obtain the optimum setting in accordance with the levels of coil and feeder resistances present. The loading and performance of the CT will also have an effect in this regard. The effect of CT magnetizing current will be to create phase lead of current. While this would assist with operation of faulted feeder relays it would reduce the stability margin of healthy feeder relays. A compromise can therefore be reached through fine adjustment of the RCA. This is adjustable in 1° steps on the P341 relays.

2.11 Restricted Earth Fault Protection (64)

Earth faults occurring on a transformer winding or terminal may be of limited magnitude, either due to the impedance present in the earth path or by the percentage of transformer winding that is involved in the fault. In general, particularly as the size of the transformer increases, it becomes unacceptable to rely on time delayed protection to clear winding or terminal faults as this would lead to an increased amount of damage to the transformer. A common requirement is therefore to provide instantaneous phase and earth fault protection. Applying differential protection across the transformer may fulfill these requirements. However, an earth fault occurring on the LV winding, particularly if it is of a limited level, may not be detected by the differential relay, as it is only measuring the corresponding HV current. Therefore, instantaneous protection that is restricted to operating for transformer earth faults only is applied. This is referred to as Restricted Earth Fault or Balanced Earth Fault (REF or BEF) protection. The BEF terminology is usually used when the protection is applied to a delta winding.

When applying differential protection such as REF, some technique must be employed to give the protection stability under external fault conditions, ensuring that relay operation only occurs for faults on the transformer winding/connections. Two methods are commonly used; bias or high impedance. The biasing technique operates by measuring the level of through current flowing and altering the relay sensitivity accordingly. The high impedance technique ensures that the relay circuit is of sufficiently high impedance such that the differential voltage that may occur under external fault conditions is less than that required to drive setting current through the relay.

The REF protection in the P341 should be applied as a high impedance differential element.

Note	*The high impedance REF element of the relay shares the same CT input as the SEF protection. Hence, only one of these elements may be selected. Note that CT requirements for REF protection are included in section 4.*

REF protection may also be applied to the stator winding of machines to provide earth fault protection in a similar way to that of the star winding of transformers. See the P34x Application Notes chapter, for more information on stator winding REF applications.

2.11.1.1 Setting Guidelines for High Impedance REF Protection

From the **Sens E/F Options** cell, **Hi Z REF** must be selected to enable High Impedance REF protection. The only setting cell then visible is **IREF> Is**, which may be programmed with the required differential current setting. This would typically be set to give a primary operating current of either 30% of the minimum earth fault level for a resistance earthed system or between 10 and 60% of rated current for a solidly earthed system.

The primary operating current (Iop) will be a function of the current transformer ratio, the relay operating current **(IREF> Is**), the number of current transformers in parallel with a relay element (n) and the magnetizing current of each current transformer (Ie) at the stability voltage (Vs). This relationship can be expressed in three ways:

- To determine the maximum current transformer magnetizing current to achieve a specific primary operating current with a particular relay operating current.

$$I_e < \frac{1}{n} \times \left(\frac{I_{op}}{\text{CT ratio}} - \text{Gen diff REF} > I_{s1} \right)$$

- To determine the maximum relay current setting to achieve a specific primary operating current with a given current transformer magnetizing current.

$$IREF\ Is1 < \left(\frac{I_{op}}{CT\ ratio} - nI_e \right)$$

- To express the protection primary operating current for a particular relay operating current and with a particular level of magnetizing current.

  Iop = (CT ratio) x (IREF > Is1 + nIe)

To achieve the required primary operating current with the current transformers that are used, a current setting **IREF> Is** must be selected for the high impedance element, as detailed in expression (ii) above. The setting of the stabilizing resistor (RST) must be calculated in the following manner, where the setting is a function of the required stability voltage setting (VS) and the relay current setting **IREF> Is**.

$$R_{ST} = \frac{Vs}{IREF > Is1} = \frac{I_F\ (R_{CT} + 2_{RL})}{IREF > Is1}$$

Note	*The above equation assumes negligible relay impedance.*

The stabilizing resistor supplied is continuously adjustable up to its maximum declared resistance.

Use of "Metrosil" Non-Linear Resistors

Metrosils are used to limit the peak voltage developed by the current transformers under internal fault conditions, to a value below the insulation level of the current transformers, relay and interconnecting leads, which are normally able to withstand 3000 V peak.

The following formulae should be used to estimate the peak transient voltage that could be produced for an internal fault. The peak voltage produced during an internal fault will be a function of the current transformer kneepoint voltage and the prospective voltage that would be produced for an internal fault if current transformer saturation did not occur. This prospective voltage will be a function of maximum internal fault secondary current, the current transformer ratio, the current transformer secondary winding resistance, the current transformer lead resistance to the common point, the relay lead resistance and the stabilizing resistor value.

$$Vp = 2\sqrt{2\ V_k\ (V_f - V_k)}$$

$$V_f = I'_f\ (R_{CT} + 2R_L + R_{ST})$$

Where:

V_p = Peak voltage developed by the CT under internal fault conditions
V_k = Current transformer knee-point voltage
V_f = Maximum voltage that would be produced if CT saturation did not occur
I'_f = Maximum internal secondary fault current
R_{CT} = Current transformer secondary winding resistance
R_L = Maximum lead burden from current transformer to relay
R_{ST} = Relay stabilizing resistor

When the value given by the formulae is greater than 3000 V peak, Metrosils should be applied. They are connected across the relay circuit and serve the purpose of shunting the secondary current output of the current transformer from the relay in order to prevent very high secondary voltages.

Metrosils are externally mounted and take the form of annular discs. Their operating characteristics follow the expression:

V = CI 0.25

Where:

V = Instantaneous voltage applied to the non-linear resistor ("Metrosil")

C = Constant of the non-linear resistor (“Metrosil”)
I = Instantaneous current through the non-linear resistor (“Metrosil”)

With a sinusoidal voltage applied across the Metrosil, the RMS current would be approximately 0.52x the peak current. This current value can be calculated as follows:

$$I(rms) = 0.52 \left(\frac{Vs\ (rms) \times \sqrt{2}}{C} \right)^4$$

Where:
Vs(rms) = rms value of the sinusoidal voltage applied across the Metrosil

This is due to the fact that the current waveform through the non-linear resistor (“Metrosil”) is not sinusoidal but appreciably distorted.

For satisfactory application of a non-linear resistor (“Metrosil”), its characteristic should be such that it complies with the following requirements:

- At the relay voltage setting, the non-linear resistor (“Metrosil”) current should be as low as possible, but no greater than approximately 30 mA rms for 1 A current transformers and approximately 100 mA rms for 5 A current transformers.
- At the maximum secondary current, the non-linear resistor (“Metrosil”) should limit the voltage to 1500 V rms or 2120 V peak for 0.25 second. At higher relay voltage settings, it is not always possible to limit the fault voltage to 500 V rms, so higher fault voltages may have to be tolerated.

Table 2 and Table 3 show the typical Metrosil types that will be required, depending on relay current rating, REF voltage setting etc.

Metrosil Units for Relays with a 1 Amp CT

The Metrosil units with 1 Amp CTs have been designed to comply with these restrictions:

- At the relay voltage setting, the Metrosil current should less than 30 mA rms
- At the maximum secondary internal fault current the Metrosil unit should limit the voltage to 1500 V rms if possible.

The Metrosil units normally recommended for use with 1 Amp CTs are shown in Table 2:

Relay voltage setting	Nominal characteristic		Recommended Metrosil type	
	C	I	Single pole relay	Triple pole relay
Up to 125 V rms	450	0.25	600 A/S1/S256	600A/S3/1/S802
125 to 300 V rms	900	0.25	600 A/S1/S1088	600A/S3/1/S1195

Table 2 - Recommended Metrosil types for 1 A CTs

Note	*Single pole Metrosil units are normally supplied without mounting brackets unless otherwise specified by the customer*

Metrosil Units for Relays with a 5 Amp CT

These Metrosil units have been designed to comply with the following requirements:

- At the relay voltage setting, the Metrosil current should less than 100 mA rms (the actual maximum currents passed by the units shown below their type description).
- At the maximum secondary internal fault current the Metrosil unit should limit the voltage to 1500 V rms for 0.25secs. At the higher relay settings, it is not possible to limit the fault voltage to 1500 V rms hence higher fault voltages have to be tolerated (indicated by *, **, ***).

The Metrosil units normally recommended for use with 5 Amp CTs and single pole relays are shown in Table 3:

Secondary internal fault current	Recommended METROSIL type			
	Relay voltage setting			
Amps rms	Up to 200 V rms	250 V rms	275 V rms	300 V rms
50 A	600 A/S1/S1213 C = 540/640 35 mA rms	600 A/S1/S1214 C = 670/800 40 mA rms	600 A/S1/S1214 C =670/800 50 mA rms	600A/S1/S1223 C = 740/870* 50mA rms
100 A	600 A/S2/P/S1217 C = 470/540 70 mA rms	600 A/S2/P/S1215 C = 570/670 75 mA rms	600 A/S2/P/S1215 C = 570/670 100 mA rms	600 A/S2/P/S1196 C =620/740* 100 mA rms
150 A	600 A/S3/P/S1219 C = 430/500 100 mA rms	600 A/S3/P/S1220 C = 520/620 100 mA rms	600 A/S3/P/S1221 C = 570/670** 100 mA rms	600 A/S3/P/S1222 C =620/740*** 100 mA rms

Notes **2400 V peak*
***2200 V peak*
****2600 V peak*

Table 3 - Recommended Metrosil types for 5 A CTs

In some situations single disc assemblies may be acceptable, contact Schneider Electric for detailed applications.

- The Metrosil units recommended for use with 5 Amp CTs can also be applied for use with triple pole relays and consist of three single pole units mounted on the same central stud but electrically insulated for each other. To order these units please specify "Triple Pole Metrosil Type", followed by the single-pole type reference.
- Metrosil units for higher relay voltage settings and fault currents can be supplied if required.

For further advice and guidance on selecting Metrosils please contact Schneider Electric.

2.12 Residual Overvoltage/Neutral Voltage Displacement Protection (59N)

On a healthy three-phase power system, the addition of each of the three-phase to earth voltages is nominally zero, as it is the vector addition of three balanced vectors at 120° to one another. However, when an earth fault occurs on the primary system this balance is upset and a 'residual' voltage is produced.

This could be measured, for example, at the secondary terminals of a voltage transformer having a "broken delta" secondary connection. Hence, a residual voltage measuring relay can be used to offer earth fault protection on such a system. This condition causes a rise in the neutral voltage with respect to earth that is commonly referred to as Neutral Voltage Displacement (NVD).

Alternatively, if the system is impedance or distribution transformer earthed, the neutral displacement voltage can be measured directly in the earth path via a single-phase VT. This type of protection can be used to provide earth fault protection irrespective of whether the generator is earthed or not, and irrespective of the form of earthing and earth fault current level.

For generator applications for faults close to the generator neutral the resulting residual voltage will be small. Therefore, as with stator earth fault protection, only 95% of the stator winding can be reliably protected. Where residual overvoltage protection is applied to a directly connected generator, such a voltage will be generated for an earth fault occurring anywhere on that section of the system and hence the NVD protection must coordinate with other earth fault protections.

Where embedded generation can be run in parallel with the external distribution system it is essential that this type of protection is provided at the interconnection with the external system. This will ensure that if the connection with the main supply system is lost due to external switching events, some type of reliable earth fault protection is provided to isolate the generator from an earth fault. Loss of connection with the external supply system may result in the loss of the earth connection, where this is provided at a distant transformer, and hence current based earth fault protection may be unreliable.

The neutral voltage displacement protection function of the P341 relay includes two stages of derived and two stages of measured neutral overvoltage protection with adjustable time delays.

Two stages are included for the derived and measured elements to account for applications that require both alarm and trip stages, for example, an insulated system. It is common in such a case for the system to have been designed to withstand the associated healthy phase overvoltages for a number of hours following an earth fault. In such applications, an alarm is generated soon after the condition is detected, which serves to indicate the presence of an earth fault on the system. This gives time for system operators to locate and isolate the fault. The second stage of the protection can issue a trip signal if the fault condition persists. .

Figure 19 and Figure 20 show the residual voltages that are produced during earth fault conditions occurring on a solid and impedance earthed power system respectively.

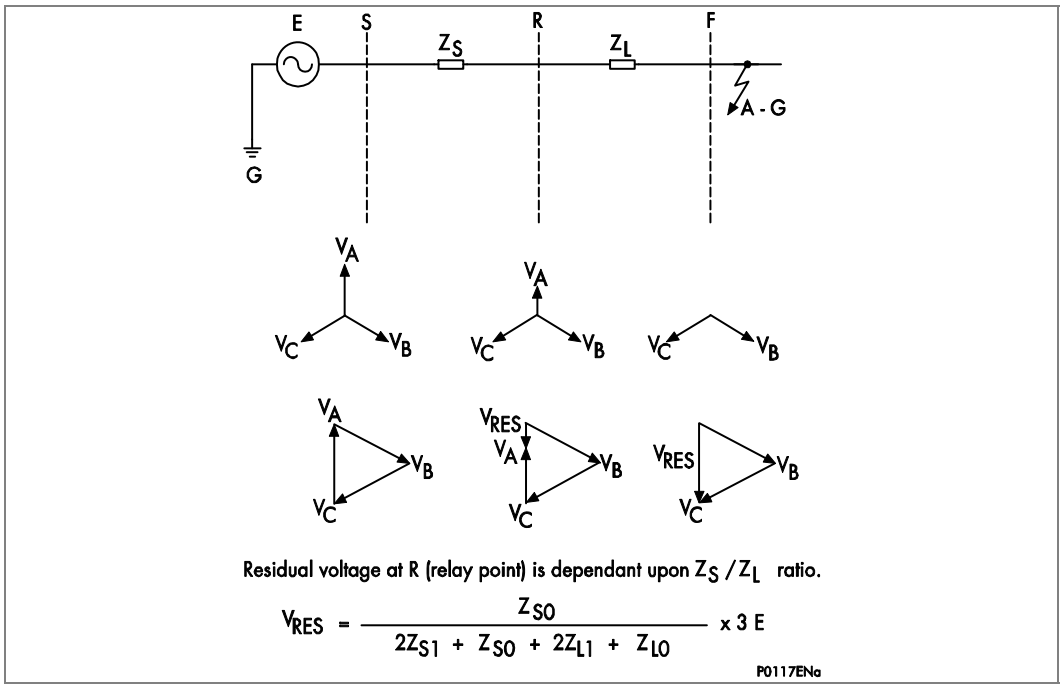

Figure 19 - Residual voltage, solidly earthed system

The residual voltage measured by a relay for an earth fault on a solidly earthed system is solely dependent on the ratio of source impedance behind the relay to line impedance in front of the relay, up to the point of fault. For a remote fault, the Zs/Zl ratio will be small, resulting in a correspondingly small residual voltage. As such, depending on the relay setting, such a relay would only operate for faults up to a certain distance along the system. The value of residual voltage generated for an earth fault condition is given by the general formula shown in Figure 19.

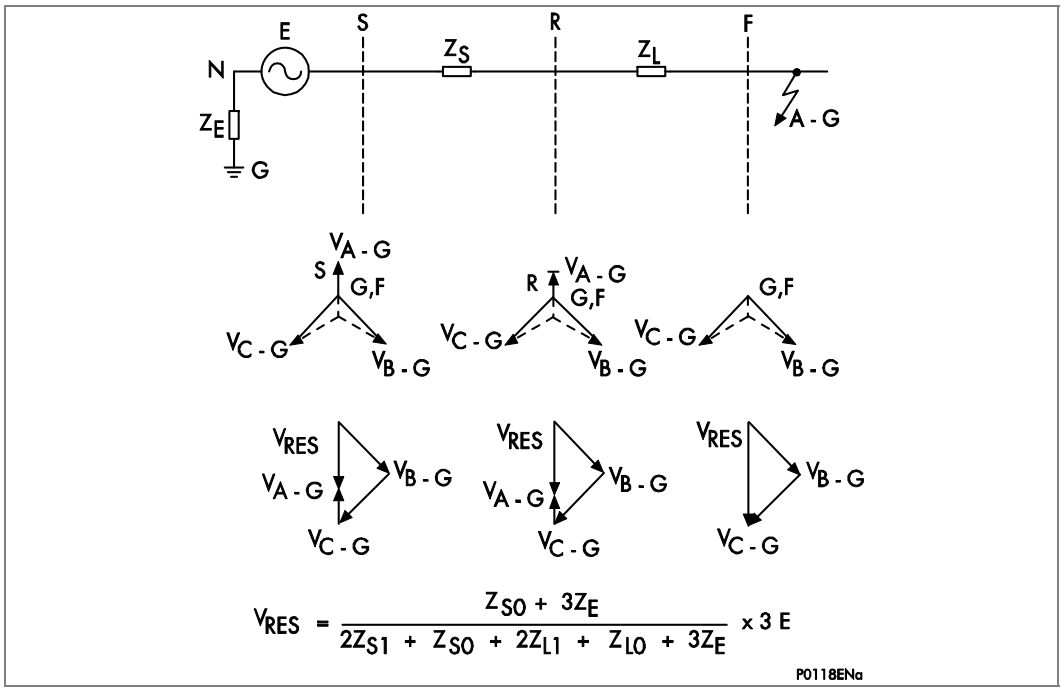

Figure 20 - Residual voltage, resistance earthed system

Figure 20 shows that a resistance earthed system will always generate a relatively large degree of residual voltage, as the zero sequence source impedance now includes the

earthing impedance. It follows then, that the residual voltage generated by an earth fault on an insulated system will be the highest possible value (3 x phase-neutral voltage), as the zero sequence source impedance is infinite.

From the previous information it can be seen that the detection of a residual overvoltage condition is an alternative means of earth fault detection, which does not require any measurement of current. This may be particularly advantageous in high impedance earthed or insulated systems, where the provision of core balance CT's on each feeder may be either impractical, or uneconomic.

Note	*Where residual overvoltage protection is applied, such a voltage will be generated for a fault occurring anywhere on that section of the system and hence the NVD protection must coordinate with other earth fault protections.*

The P341 relay can internally derive this voltage from the three-phase voltage input that must be supplied from either a 5-limb or three single-phase VT's. These types of VT design allow the passage of residual flux and consequently permit the relay to derive the required residual voltage. In addition, the primary star point of the VT must be earthed. A three limb VT has no path for residual flux and is therefore unsuitable to supply the relay.

2.12.1 Setting Guidelines for Residual Overvoltage/Neutral Voltage Displacement Protection

Stage 1 may be selected as either **IDMT** (inverse time operating characteristic), **DT** (definite time operating characteristic) or **Disabled**, within the **VN>1 Function** cell. Stage 2 operates with a definite time characteristic and is Enabled/Disabled in the **VN>2 Status** cell. The time delay. (**VN>1 TMS** - for IDMT curve; **V>1 Time Delay**, **V>2 Time Delay** - for definite time) should be selected in accordance with normal relay co-ordination procedures to ensure correct discrimination for system faults.

The residual overvoltage protection can be set to operate from the voltage measured at the VN input VT terminals using VN>3/4 protection elements or the residual voltage derived from the phase-neutral voltage inputs as selected using the VN>1/2 protection elements.

The voltage setting applied to the elements is dependent upon the magnitude of residual voltage that is expected to occur during the earth fault condition. This in turn is dependent upon the method of system earthing employed and may be calculated by using the formulae previously given in Figure 19 and Figure 20. It must also be ensured that the relay is set above any standing level of residual voltage that is present on the system. IDMT characteristics are selectable on the first stage of NVD in order that elements located at various points on the system may be time graded with one another.

It must also be ensured that the voltage setting of the element is set above any standing level of residual voltage that is present on the system. A typical setting for residual overvoltage protection is 5 V.

The second stage of protection can be used as an alarm stage on unearthed or very high impedance earthed systems where the system can be operated for an appreciable time under an earth fault condition.

For machine applications of neutral voltage displacement protection see the P34x Application Notes chapter, *P34x/EN AP*.

2.13 Undervoltage Protection (27)

Where the P341 relay is being used as interconnection protection the under voltage element is used to prevent power being exported to external loads at a voltage below normal allowable limits. Undervoltage protection may also be used for back-up protection for a machine where it may be difficult to provide adequate sensitivity with phase current measuring elements.

For an isolated generator, or isolated set of generators, a prolonged under voltage condition could arise for a number of reasons. This could be due to failure of Automatic Voltage Regulation (AVR) equipment or excessive load following disconnection from the main grid supply. Where there is a risk that a machine could become disconnected from the main grid supply and energize external load it is essential that under voltage protection is used. The embedded generator must be prevented from energizing external customers with voltage below the statutory limits imposed on the electricity supply authorities.

A two stage under voltage element is provided. The element can be set to operate from phase-phase or phase-neutral voltages.

Undervoltage conditions may occur on a power system for a variety of reasons, some of which are outlined below:

- Increased system loading. Generally, some corrective action would be taken by voltage regulating equipment such as AVRs or On Load Tap Changers, in order to bring the system voltage back to it's nominal value. If the regulating equipment is unsuccessful in restoring healthy system voltage, then tripping by means of an undervoltage relay will be required following a suitable time delay.
- Faults occurring on the power system result in a reduction in voltage of the phases involved in the fault. The proportion by which the voltage decreases is directly dependent upon the type of fault, method of system earthing and it's location with respect to the relaying point. Consequently, coordination with other voltage and current-based protection devices is essential in order to achieve correct discrimination.
- Complete loss of busbar voltage. This may occur due to fault conditions present on the incomer or busbar itself, resulting in total isolation of the incoming power supply. For this condition, it may be a requirement for each of the outgoing circuits to be isolated, such that when supply voltage is restored, the load is not connected. Therefore the automatic tripping of a feeder on detection of complete loss of voltage may be required. This may be achieved by a three-phase undervoltage element.
- Where outgoing feeders from a busbar are supplying induction motor loads, excessive dips in the supply may cause the connected motors to stall, and should be tripped for voltage reductions which last longer than a pre-determined time.

2.13.1 Setting Guidelines for Undervoltage Protection

Stage 1 may be selected as either **IDMT** (for inverse time delayed operation), **DT** (for definite time delayed operation) or **Disabled**, within the **V<1 Function** cell. Stage 2 is definite time only and is **Enabled/Disabled** in the **V<2 Status** cell. The time delay (**V<1 TMS** - for IDMT curve; **V<1 Time Delay**, **V<2 Time Delay** - for definite time) should be adjusted accordingly.

The undervoltage protection can be set to operate from phase-phase or phase-neutral voltage as selected by **V< Measur't Mode**. Single or three-phase operation can be selected in **V<1 Operate Mode**. When **Any Phase** is selected, the element will operate if any phase voltage falls below setting, when **Three-phase** is selected the element will operate when all three-phase voltages are below the setting.

In many applications, undervoltage protection is not required to operate during system earth fault conditions. If this is the case, the element should be selected in the menu to operate from a phase to phase voltage measurement, as this quantity is less affected by single-phase voltage depressions due to earth faults.

The voltage threshold setting for the undervoltage protection should be set at some value below the voltage excursions that may be expected under normal system operating conditions. This threshold is dependent upon the system in question but typical healthy system voltage excursions may be in the order of -10% of nominal value.

Similar comments apply with regard to a time setting for this element, i.e. the required time delay is dependent on the time for which the system is able to withstand a depressed voltage. If motor loads are connected, then a typical time setting may be in the order of 0.5 seconds.

Where the relay is used to provide the protection required for connecting the generator in parallel with the local electricity supply system (e.g. requirements of G59 in the UK), the local electricity supply authority may advise settings for the element. The settings must prevent the generator from exporting power to the system with voltage outside of the statutory limits imposed on the supply authority. For this mode of operation the element must be set to operate from phase to neutral voltage, which will provide an additional degree of earth fault protection. The operating characteristic would normally be set to definite time, set **V<1 Function** to **DT**. The time delay, **V<1 Time Delay**, should be set to coordinate with downstream protection. Additionally, the delay should be long enough to prevent unwanted operation of the under voltage protection for transient voltage dips. These may occur during clearance of faults further into the power system or by starting of local machines. The required time delay would typically be in excess of 3 s - 5 s.

As previously stated, local regulations for operating a generator in parallel with the external electricity supply may dictate the settings used for the under voltage protection. For example in the UK the protection is typically set to measure phase to neutral voltage and trip at 90% of nominal voltage in a time of less than 0.5 s.

The second stage can be used as an alarm stage to warn the user of unusual voltage conditions so that corrections can be made. This could be useful if the machine is being operated with the AVR selected to manual control.

To prevent operation of any under voltage stage when the CB is open “poledead” logic is included in the relay. This is facilitated by selecting **V Poledead Inh** to **Enabled**. This will ensure that when a poledead condition is detected (i.e. all phase currents below the undercurrent threshold or CB Open, as determined by an opto isolator and the PSL) the undervoltage element will be inhibited.

2.14 Overvoltage Protection (59)

An overvoltage condition could arise when a generator is running but not connected to a power system, or where a generator is providing power to an islanded power system. Such an overvoltage could arise in the event of a fault with automatic voltage regulating equipment or if the voltage regulator is set for manual control and an operator error is made. Overvoltage protection should be set to prevent possible damage to generator insulation, prolonged over-fluxing of the generating plant, or damage to power system loads.

When a generator is synchronized to a power system with other sources, an over voltage could arise if the generator is lightly loaded supplying a high level of power system capacitive charging current. An overvoltage condition might also be possible following a system separation, where a generator might experience full-load rejection whilst still being connected to part of the original power system. The automatic voltage regulating equipment and machine governor should quickly respond to correct the overvoltage condition in these cases. However, overvoltage protection is advisable to cater for a possible failure of the voltage regulator or for the regulator having been set to manual control.

A two stage overvoltage element is provided. The element can be set to operate from phase-phase or phase-neutral voltages.

2.14.1 Setting Guidelines for Overvoltage Protection

Stage 1 may be selected as either **IDMT** (for inverse time delayed operation), **DT** (for definite time delayed operation) or **Disabled**, within the **V>1 Function** cell. Stage 2 has a definite time delayed characteristic and is **Enabled/Disabled** in the **V>2 Status** cell. The time delay (**V>1 TMS** - for IDMT curve; **V>1 Time Delay**, **V>2 Time Delay** - for definite time) should be selected accordingly.

The overvoltage protection can be set to operate from Phase-Phase or Phase-Neutral voltage as selected by **V> Measur't Mode** cell. Single or three-phase operation can be selected in **V> Operate Mode** cell. When **Any Phase** is selected the element will operate if any phase voltage is above setting, when **Three-phase** is selected the element will operate when all three-phase voltages are above the setting.

The inclusion of the two stages and their respective operating characteristics allows for a number of possible applications:

- Use of the IDMT characteristic gives the option of a longer time delay if the overvoltage condition is only slight but results in a fast trip for a severe overvoltage. As the voltage settings for both of the stages are independent, the second stage could then be set lower than the first to provide a time delayed alarm stage if required
- Alternatively, if preferred, both stages could be set to definite time and configured to provide the required alarm and trip stages
- If only one stage of overvoltage protection is required, or if the element is required to provide an alarm only, the remaining stage may be disabled within the relay menu

This type of protection must be coordinated with any other overvoltage relays at other locations on the system. This should be carried out in a similar manner to that used for grading current operated devices.

Generators can typically withstand a 5% over voltage condition continuously. The withstand times for higher over voltages should be declared by the generator manufacturer.

To prevent operation during earth faults, the element should operate from the phase-phase voltages, to achieve this **V>1 Measur't Mode** can be set to **Phase-Phase** with **V>1 Operating Mode** set to **Three-phase**. The overvoltage threshold, **V>1 Voltage Set**, should typically be set to 100% - 120% of the nominal phase-phase voltage seen by the relay. The time delay, **V>1 Time Delay**, should be set to prevent unwanted tripping of the delayed overvoltage protection function due to transient over voltages that do not pose a risk to the generating plant; e.g. following load rejection where correct AVR/Governor control occurs. The typical delay to be applied would be 1 s - 3 s, with a longer delay being applied for lower voltage threshold settings.

The second stage can be used to provide instantaneous high-set over voltage protection. The typical threshold setting to be applied, **V>2 Voltage Set**, would be 130 - 150% of the nominal phase-phase voltage seen by the relay, depending on plant manufacturers' advice. For instantaneous operation, the time delay, **V>2 Time Delay**, should be set to 0 s.

Where the relay is used to provide the protection required for connecting the generator in parallel with the local electricity supply system (e.g. requirements of G59 in the UK), the local electricity supply authority may advise settings for the element. The settings must prevent the generator from exporting power to the system with voltages outside of the statutory limits imposed on the supply authority. For example in the UK the protection is typically set to measure phase to neutral voltage and trip at 110% of nominal voltage in a time of less than 0.5 s.

If phase to neutral operation is selected, care must be taken to ensure that the element will grade with downstream protections during earth faults, where the phase-neutral voltage can rise significantly.

2.15 Negative Phase Sequence (NPS) Overvoltage Protection (47)

Where an incoming feeder is supplying a switchboard that is feeding rotating plant (e.g. a motor), correct phasing and balance of the ac supply is essential. Incorrect phase rotation could result in any connected machines rotating in the wrong direction. For some hydro machines two-phases can be swapped to allow the machine to rotate in a different direction to act as a generator or a motor pumping water.

Any unbalanced condition occurring on the incoming supply will result in the presence of Negative Phase Sequence (NPS) components of voltage. In the event of incorrect phase rotation, the supply voltage would effectively consist of 100% negative phase sequence voltage only.

For such applications the P34x relay includes a negative phase sequence overvoltage element. This element monitors the input voltage rotation and magnitude (normally from a bus connected voltage transformer). This element could be used as a check for hydro machines that the phase rotation is correct to operate the machine in the selected mode as a generator or motor.

The NPS overvoltage element can also be used to provide an additional check to indicate a phase-earth or phase-phase fault is present for voltage controlled overcurrent protection in the PSL. In this application the NPS overvoltage protection can be accelerated when the CB is closed. Typically, the operating time of the NPS overvoltage start is slowed (typical operating time is <60 ms) to prevent incorrect operation when closing the CB due to pole scattering. However, when the CB is closed there is no need to inherently slow the protection start (typical accelerated operating time is <40 ms). The V2>1 Accelerate: DDB 554 signal connected to the CB Closed 3 Ph: DDB 1043 signal can be used to accelerate the protection start.

2.15.1 Setting Guidelines

As the primary concern is normally the detection of incorrect phase rotation (rather than small unbalances), a sensitive setting is not required. In addition, it must be ensured that the setting is above any standing NPS voltage that may be present due to imbalances in the measuring VT, relay tolerances etc. A setting of approximately 15% of rated voltage may be typical.

Note	*Standing levels of NPS voltage (V2) will be displayed in the **Measurements 1** column of the relay menu, labeled **V2 Magnitude**.*

Hence, if more sensitive settings are required, they may be determined during the commissioning stage by viewing the actual level that is present.

The operation time of the element will be highly dependent on the application. A typical setting would be in the region of 5 s.

2.16 Underfrequency Protection (81U)

Underfrequency operation of a generator will occur when the power system load exceeds the prime mover capability of an islanded generator or group of generators. Power system overloading can arise when a power system becomes split, with load left connected to a set of 'islanded' generators that is in excess of their capacity. Automatic load shedding could compensate for such events. In this case, underfrequency operation would be a transient condition. This characteristic makes underfrequency protection a simple form of "Loss of Mains" protection on system where it is expected that the islanded load attached to the machine when the grid connection fails exceeds the generator capacity. In the event of the load shedding being unsuccessful, the generators should be provided with backup underfrequency protection.

Where the P341 relay is being used as interconnection protection the underfrequency element is used to prevent power being exported to external loads at a frequency below normal allowable limits. The underfrequency protection can be used to detect a loss of mains condition where the main supply connection to the load is disconnected and there is a variation in generator speed due to the generator experiencing a step change in load.

Four independent definite time-delayed stages of underfrequency protection are provided. Two additional underfrequency stages can be provided by reconfiguring the two overfrequency protection stages as underfrequency protection using the Programmable Scheme Logic (PSL). As well as being able to initiate generator tripping, the underfrequency protection can also be arranged to initiate local load-shedding, where appropriate. Selectable fixed scheme logic is provided to allow each stage of underfrequency protection to be disabled when the outgoing CB is open, to prevent unnecessary load tripping.

2.16.1 Setting Guidelines for Underfrequency Protection

Each stage of underfrequency protection may be selected as **Enabled** or **Disabled**, within the **F<x Status** cells. The frequency pickup setting, **F<x Setting**, and time delays, **F<x Time Delay**, for each stage should be selected accordingly.

The protection function should be set so that declared frequency-time limits for the generating set are not infringed. Typically, a 10% underfrequency condition should be continuously sustainable.

For industrial generation schemes, where generation and loads may be under common control/ownership, the P34x underfrequency protection function could be used to initiate local system load shedding. Four stage underfrequency/load shedding can be provided. The final stage of underfrequency protection should be used to trip the generator.

Where separate load shedding equipment is provided, the underfrequency protection should co-ordinate with it. This will ensure that generator tripping will not occur in the event of successful load shedding following a system overload. Two stages of underfrequency protection could be set-up, as shown in Figure 21, to coordinate with multi-stage system load shedding.

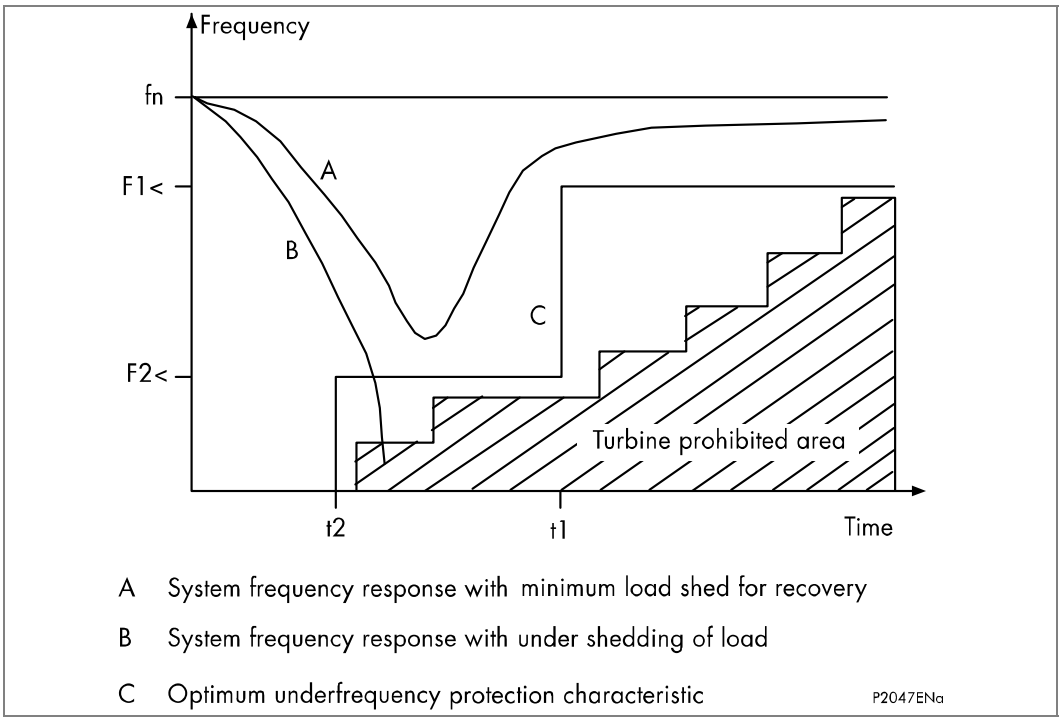

Figure 21 - Coordination of underfrequency protection function with system load shedding

To prevent operation of any underfrequency stage during normal shutdown of the generator “poledead” logic is included in the relay. This is facilitated for each stage by setting the relevant bit in **F< Function Link**. For example if **F< Function Link** is set to 0111, Stage 1, 2 and 3 of underfrequency protection will be blocked when the generator CB is open. Selective blocking of the frequency protection stages in this way will allow a single stage of protection to be enabled during synchronization or offline running to prevent unsynchronized overfluxing of the machine. When the machine is synchronized, and the CB closed, all stages of frequency protection will be enabled providing a multi-stage load shed scheme if desired.

Where the relay is used to provide the protection required for connecting the generator in parallel with the local electricity supply system (e.g. requirements of G59 in the UK), the local electricity supply authority may advise settings for the element. The settings must prevent the generator from exporting power to the system with frequency outside of the statutory limits imposed on the supply authority. For example, in the UK the underfrequency protection is typically set to 47 Hz with a trip time of less than 0.5 s.

2.17 Overfrequency Protection Function (81O)

Overfrequency running of a generator arises when the mechanical power input to the alternator is in excess of the electrical load and mechanical losses. The most common occurrence of overfrequency is after substantial loss of load. When a rise in running speed occurs, the governor should quickly respond to reduce the mechanical input power, so that normal running speed is quickly regained. Overfrequency protection may be required as a back-up protection function to cater for governor or throttle control failure following loss of load or during unsynchronized running.

Moderate overfrequency operation of a generator is not as potentially threatening to the generator and other electrical plant as underfrequency running. Action can be taken at the generating plant to correct the situation without necessarily shutting down the generator.

Where the P341 relay is being used as interconnection protection the overfrequency element will prevent power being exported to external loads at a frequency higher than normal allowable limits. The overfrequency protection can be used to detect a loss of mains condition where the main supply connection to the load is disconnected and there is a variation in generator speed due to the generator experiencing a step change in load.

Two independent time-delayed stages of overfrequency protection are provided.

2.17.1 Setting Guidelines for Overfrequency Protection

Each stage of overfrequency protection may be selected as **Enabled** or **Disabled**, within the **F>x Status** cells. The frequency pickup setting, **F>x Setting**, and time delays, **F>x Time Delay**, for each stage should be selected accordingly.

The P34x overfrequency settings should be selected to coordinate with normal, transient overfrequency excursions following full-load rejection. The generator manufacturer should declare the expected transient overfrequency behavior that should comply with international governor response standards. A typical overfrequency setting would be 10% above nominal.

Where the relay is used to provide the protection required for connecting the generator in parallel with the local electricity supply system (e.g. requirements of G59 in the UK), the local electricity supply authority may advise settings for the element. The settings must prevent the generator from exporting power to the system with frequency outside of the statutory limits imposed on the supply authority. For example in the UK overfrequency protection is typically set to 50.5 Hz with a trip time of less than 0.5 s.

2.18 Thermal Overload Protection (49)

2.18.1 Introduction

Overloads can result in stator temperature rises which exceed the thermal limit of the winding insulation. Empirical results suggest that the life of insulation is approximately halved for each 10°C rise in temperature above the rated value. However, the life of insulation is not wholly dependent upon the rise in temperature but on the time the insulation is maintained at this elevated temperature. Due to the relatively large heat storage capacity of an electrical machine, infrequent overloads of short duration may not damage the machine. However, sustained overloads of a few percent may result in premature ageing and failure of insulation.

The physical and electrical complexity of generator construction result in a complex thermal relationship. It is not possible to create an accurate mathematical model of the true thermal characteristics of the machine.

However, if a generator is considered to be a homogeneous body, developing heat internally at a constant rate and dissipating heat at a rate directly proportional to its temperature rise, it can be shown that the temperature at any instant is given by a time-current thermal replica characteristic.

As previously stated it is an oversimplification to regard a generator as an homogeneous body. The temperature rise of different parts or even of various points in the same part may be very uneven. However, it is reasonable to consider that the current-time relationship follows an inverse characteristic. A more accurate representation of the thermal state of the machine can be obtained through the use of Temperature Monitoring Devices (RTDs) which target specific areas. Also, for short time overloads the application of RTDs and overcurrent protection can provide better protection.

Note	*The thermal model does not compensate for the effects of ambient temperature change. So if there is an unusually high ambient temperature or if the machine cooling is blocked RTDs will also provide better protection.*

2.18.2 Thermal Replica

The P341 relay models the time-current thermal characteristic of a generator by internally generating a thermal replica of the machine.

The positive and negative sequence components of the generator current are measured independently and are combined together to form an equivalent current, Ieq, which is supplied to the replica circuit. The heating effect in the thermal replica is produced by Ieq2 and therefore takes into account the heating effect due to both positive and negative sequence components of current.

Unbalanced phase currents will cause additional rotor heating that may not be accounted for by some thermal protection relays based on the measured current only. Unbalanced loading results in the flow of positive and negative sequence current components. Load unbalance can arise as a result of single-phase loading, non-linear loads (involving power electronics or arc furnaces, etc.), uncleared or repetitive asymmetric faults, fuse operation, single-pole tripping and reclosing on transmission systems, broken overhead line conductors and asymmetric failures of switching devices. Any negative phase sequence component of stator current will set up a reverse-rotating component of stator flux that passes the rotor at twice synchronous speed. Such a flux component will induce double frequency eddy currents in the rotor, which can cause overheating of the rotor body, main rotor windings, damper windings etc. This extra heating is not accounted for in the thermal limit curves supplied by the generator manufacturer as these curves assume positive sequence currents only that come from a perfectly balanced supply and generator design. The P34x thermal model may be biased to reflect the additional

heating that is caused by negative sequence current when the machine is running. This biasing is done by creating an equivalent heating current rather than simply using the phase current. The M factor is a constant that relates negative sequence rotor resistance to positive sequence rotor resistance. If an M factor of 0 is used the unbalance biasing is disabled and the overload curve will time out against the measured generator positive sequence current.

The equivalent current for operation of the overload protection is in accordance with the following expression:

$I_{eq} = \sqrt{(I_1^2 + MI_2^2)}$

Where:
I_1 = Positive sequence current
I_2 = Negative sequence current
M = A user settable constant proportional to the thermal capacity of the machine

As previously described, the temperature of a generator will rise exponentially with increasing current. Similarly, when the current decreases, the temperature also decreases in a similar manner. Therefore to achieve close sustained overload protection, the P341 relay incorporates a wide range of thermal time constants for heating and cooling.

Furthermore, the thermal withstand capability of the generator is affected by heating in the winding prior to the overload. The thermal replica is designed to take account the extremes of zero pre-fault current, known as the ‘cold’ condition and the full rated pre-fault current, known as the ‘hot’ condition. With no pre-fault current the relay will be operating on the ‘cold curve’. When a generator is or has been running at full load prior to an overload the ‘hot curve’ is applicable. Therefore during normal operation the relay will be operating between these two limits.

2.18.3 Setting Guidelines

The current setting is calculated as:

Thermal Trip = Permissible continuous loading of the plant item/CT ratio.

The heating thermal time constant should be chosen so that the overload curve is always below the thermal limits provided by the manufacturer. This will ensure that the machine is tripped before the thermal limit is reached.

The relay setting, **T-heating**, is in minutes.

The cooling thermal time constant should be provided by the manufacturer. However, unless otherwise specified, the cooling time constant, **T-cooling**, setting should be set equal to the main heating time constant setting, **T-heating**. The cooling time constant is applied when the machine is running and the load current is decreasing. It is therefore practical to assume the cooling time constant is similar to the heating time constant if information is not available from the manufacturer. When the machine is not turning the machine will normally cool significantly slower than when the rotor is turning. The relay setting, **T-cooling**, is in minutes.

An alarm can be raised on reaching a thermal state corresponding to a percentage of the trip threshold. A typical setting might be **Thermal Alarm** = 70% of thermal capacity. The thermal alarm could also be used to prevent restarting of the generator until the alarm level resets. For this application a typical setting may be 20%.

The **M Factor** is used to increase the influence of negative sequence current on the thermal replica protection due to unbalanced currents. If it is required to account for the heating effect of unbalanced currents then this factor should be set equal to the ratio of negative phase sequence rotor resistance to positive sequence rotor resistance at rated speed. When an exact setting can not be calculated a setting of 3 should be used. This is a typical setting and will suffice for the majority of applications. If an **M factor** of 0 is used the unbalance biasing is disabled and the overload curve will time out against the measured generator positive sequence current.

Note	*The extra heating caused by unbalanced phase currents is not accounted for in the thermal limit curves supplied by the generator manufacturer as these curves assume positive sequence currents only that come from a perfectly balanced supply and generator design, so the default setting is 0.*

2.19 Circuit Breaker Fail (CBF) Protection (50BF)

Following inception of a fault one or more main protection devices will operate and issue a trip output to the circuit breaker(s) associated with the faulted circuit. Operation of the circuit breaker is essential to isolate the fault, and prevent damage/further damage to the power system. For transmission/sub-transmission systems, slow fault clearance can also threaten system stability. It is therefore common practice to install circuit breaker failure protection, which monitors that the circuit breaker has opened within a reasonable time. If the fault current has not been interrupted following a set time delay from circuit breaker trip initiation, Circuit Breaker Failure (CBF) protection will operate.

CBF operation can be used to back-trip upstream circuit breakers to ensure that the fault is isolated correctly. CBF operation can also reset all start output contacts, ensuring that any blocks asserted on upstream protection are removed.

2.19.1 Reset Mechanisms for Breaker Fail Timers

It is common practice to use low set undercurrent elements in protection relays to indicate that circuit breaker poles have interrupted the fault or load current, as required. This covers the following situations:

- Where circuit breaker auxiliary contacts are defective, or cannot be relied on to definitely indicate that the breaker has tripped.
- Where a circuit breaker has started to open but has become jammed. This may result in continued arcing at the primary contacts, with an additional arcing resistance in the fault current path. Should this resistance severely limit fault current, the initiating protection element may reset. Therefore reset of the element may not give a reliable indication that the circuit breaker has opened fully.

For any protection function requiring current to operate, the relay uses operation of undercurrent elements (I<) to detect that the necessary circuit breaker poles have tripped and reset the CB fail timers. However, the undercurrent elements may not be reliable methods of resetting circuit breaker fail in all applications. For example:

- Where non-current operated protection, such as under/overvoltage or under/overfrequency, derives measurements from a line connected voltage transformer. Here, I< only gives a reliable reset method if the protected circuit would always have load current flowing. Detecting drop-off of the initiating protection element might be a more reliable method.
- Where non-current operated protection, such as under/overvoltage or under/overfrequency, derives measurements from a busbar connected voltage transformer. Again using I< would rely upon the feeder normally being loaded. Also, tripping the circuit breaker may not remove the initiating condition from the busbar, and hence drop-off of the protection element may not occur. In such cases, the position of the circuit breaker auxiliary contacts may give the best reset method.

2.19.1.1 Breaker Fail Timer Settings

Typical timer settings to use are as follows:

CB fail reset mechanism	tBF time delay	Typical delay for 2½ cycle circuit breaker
Initiating element reset	CB interrupting time + element reset time (max.) + error in tBF timer + safety margin	50 + 50 + 10 + 50 = 160 ms
CB open	CB auxiliary contacts opening/closing time (max.) + error in tBF timer + safety margin	50 + 10 + 50 = 110 ms
Undercurrent elements	CB interrupting time+ undercurrent element (max.) + safety margin operating time	50 + 12 + 50 = 112 ms

Table 4 - CB fail typical timer settings

Note	*All CB Fail resetting involves the operation of the undercurrent elements. Where element reset or CB open resetting is used the undercurrent time setting should still be used if this proves to be the worst case.*

The examples above consider direct tripping of a 2½ cycle circuit breaker.

Note	*Where auxiliary tripping relays are used, an additional 10 - 15 ms must be added to allow for trip relay operation.*

2.19.2 Breaker Fail Undercurrent Settings

The phase undercurrent settings (I<) must be set less than load current, to ensure that I< operation indicates that the circuit breaker pole is open. A typical setting for overhead line or cable circuits is 20% In, with 5% In common for generator circuit breaker CBF.

The sensitive earth fault protection (SEF) and standby earth fault (SBEF) undercurrent elements must be set less than the respective trip setting, typically as follows:

ISEF<= (ISEF> trip)/2

IN< = (IN> trip)/2

For generator applications the undercurrent elements should be measuring current from CTs on the terminal side of the generator. This is because for an internal fault on the generator after the CB has tripped the generator will still be supplying some fault current which will be seen by undercurrent elements measuring current from CTs on the neutral side of the generator. This could thus give false indication of a breaker fail condition.

2.20 Blocked Overcurrent Protection

Blocked overcurrent protection involves the use of start contacts from downstream relays wired onto blocking inputs of upstream relays. This allows identical current and time settings to be employed on each of the relays involved in the scheme, as the relay nearest to the fault does not receive a blocking signal and hence trips discriminatively. This type of scheme therefore reduces the amount of required grading stages and consequently fault clearance times.

The principle of blocked overcurrent protection may be extended by setting fast acting overcurrent elements on the P341 which are then arranged to be blocked by start contacts from the relays protecting the outgoing feeders. The fast acting element is thus allowed to trip for a fault condition on the busbar but is stable for external feeder faults by means of the blocking signal. This type of scheme therefore provides much reduced fault clearance times for busbar faults than would be the case with conventional time graded overcurrent protection. The availability of multiple overcurrent and earth fault stages means that back-up time graded overcurrent protection is also provided. This is shown in Figure 22 and Figure 23.

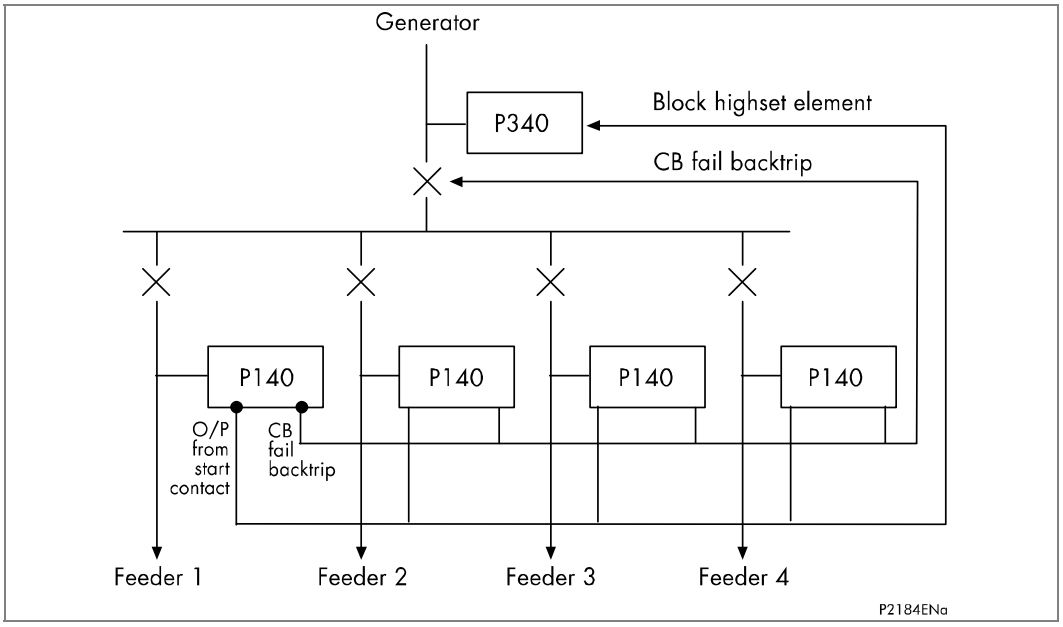

Figure 22 - Simple busbar blocking scheme (single incomer)

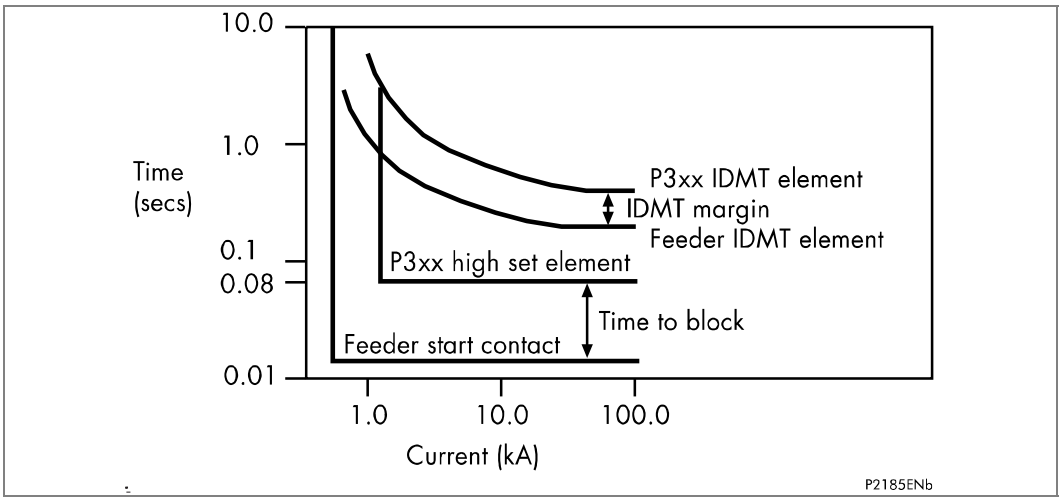

Figure 23 - Simple busbar blocking scheme (single incomer)

The P140/P341 relays have start outputs available from each stage of each of the overcurrent and earth fault elements, including sensitive earth fault. These start signals may then be routed to output contacts by programming accordingly. Each stage is also capable of being blocked by being programmed to the relevant opto-isolated input.

The P341 relays provide a 50 V field supply for powering the opto-inputs. Therefore in the unlikely event of the failure of this supply, blocking of that relay would not be possible. For this reason, the field supply is supervised and if a failure is detected, it is possible, via the relays programmable scheme logic, to provide an output alarm contact. This contact can then be used to signal an alarm within the substation. Alternatively, the relays scheme logic could be arranged to block any of the overcurrent/earth fault stages that would operate non-discriminatively due to the blocking signal failure.

For further guidance on the use of blocked overcurrent schemes refer Schneider Electric.

2.21 Current Loop Inputs and Outputs

2.21.1 Current Loop Inputs

Four analog (or current loop) inputs are provided for transducers with ranges of 0 - 1 mA, 0 - 10 mA, 0 - 20 mA or 4 - 20 mA. The analog inputs can be used for various transducers such as vibration monitors, tachometers and pressure transducers. Associated with each input there are two protection stages, one for alarm and one for trip. Each stage can be individually enabled or disabled and each stage has a definite time delay setting. The Alarm and Trip stages can be set for operation when the input value falls below the Alarm/Trip threshold **Under** or when the input current is above the input value **Over**.

Power-on diagnostics and continuous self-checking are provided for the hardware associated with the current loop inputs.

For the 4 - 20 mA input range, a current level below 4 mA indicates that there is a fault with the transducer or the wiring. An instantaneous undercurrent alarm element is available, with a setting range from 0 to 4 mA. This element controls an output signal (CLI1/2/3/4 I< Fail Alm, DDB 390-393) which can be mapped to a user defined alarm if required.

2.21.2 Setting Guidelines for Current Loop Inputs

For each analog input, the user can define the following:

- The current input range: 0 - 1 mA, 0 - 10 mA, 0 - 20 mA, 4 - 20 mA
- The analog input function and unit, this is in the form of a 16-character input label
- Analog input minimum value (setting range from -9999 to 9999)
- Analog input maximum value (setting range from -9999 to 9999)
- Alarm threshold, range within the maximum and minimum set values
- Alarm function - over or under
- Alarm delay
- Trip threshold, range within maximum and minimum set values
- Trip function - over or under
- Trip delay

Each current loop input can be selected as Enabled or Disabled as can the Alarm and Trip stage of each of the current loop input. The Alarm and Trip stages can be set for operation when the input value falls below the Alarm/Trip threshold **Under** or when the input current is above the input value **Over** depending on the application. One of four types of analog inputs can be selected for transducers with ranges of 0 - 1 mA, 0 - 10 mA, 0 - 20 mA or 4 - 20 mA.

The Maximum and Minimum settings allow the user to enter the range of physical or electrical quantities measured by the transducer. The settings are unit-less; however, the user can enter the transducer function and the unit of the measurement using the 16-character user defined CLI Input Label. For example, if the analog input is used to monitor a power measuring transducer, the appropriate text could be "Active Power (MW)".

The alarm and trip threshold settings should be set within the range of physical or electrical quantities defined by the user. The relay will convert the current input value into its corresponding transducer measuring value for the protection calculation.

For example if the CLI Minimum is -1000 and the CLI Maximum is 1000 for a 0 - 10mA input, an input current of 10 mA is equivalent to a measurement value of 1000, 5 mA is 0 and 1 mA is -800. If the CLI Minimum is 1000 and the CLI Maximum is -1000 for a 0 - 10 mA input, an input current of 10 mA is equivalent to a measurement value of -1000, 5 mA is 0 and 1 mA is 800. These values are available for display in the **CLIO Input 1/2/3/4** cells in the **MEASUREMENTS 3** menu. The top line shows the CLI Input Label and the bottom line shows the measurement value.

2.21.3 Current Loop Outputs

Four analog current outputs are provided with ranges of 0 - 1 mA, 0 - 10 mA, 0 - 20 mA or 4 - 20 mA which can alleviate the need for separate transducers. These may be used to feed standard moving coil ammeters for analog indication of certain measured quantities or into a SCADA using an existing analog RTU.

- The outputs can be assigned to any of the following relay measurements:
- Magnitudes of IA, IB, IC, IN, IN Derived, I Sensitive
- Magnitudes of I1, I2, I0
- IA RMS, IB RMS, IC RMS
- Magnitudes of VAB, VBC, VCA, VAN, VBN, VCN, VN Measured, VN Derived
- Magnitudes of V1, V2 and V0
- VAN RMS, VBN RMS, VCN RMS
- Frequency
- Single-phase active, reactive and apparent power, single-phase power factor
- Three-phase active, reactive and apparent power, single-phase power factor
- Stator thermal state
- Analog inputs
- DLR ampacity and maximum ac current

The user can set the measuring range for each analog output. The range limits are defined by the Maximum and Minimum settings. This allows the user to “zoom in” and monitor a restricted range of the measurements with the desired resolution. For voltage, current and power quantities, these settings can be set in either primary or secondary quantities, depending on the **CLO1/2/3/4 Set Values - Primary/Secondary** setting associated with each current loop output.

Power-on diagnostics and continuous self-checking are provided for the hardware associated with the current loop outputs.

2.21.4 Setting Guidelines for Current Loop Outputs

Each current loop output can be selected as **Enabled** or **Disabled**. One of four types of analog output can be selected for transducers with ranges of 0 - 1 mA, 0 - 10 mA, 0 - 20 mA or 4 - 20 mA. The 4 - 20 mA range is often used so that an output current is still present when the measured value falls to zero. This is to give a fail safe indication and may be used to distinguish between the analog transducer output becoming faulty and the measurement falling to zero.

The Maximum and Minimum settings allow the user to enter the measuring range for each analog output. The range, step size and unit corresponding to the selected parameter are shown in the Operating chapter. This allows the user to “zoom in” and monitor a restricted range of the measurements with the desired resolution.

For voltage, current and power quantities, these settings can be set in either primary or secondary quantities, depending on the **CLO1/2/3/4 Set Values - Primary/Secondary** setting associated with each current loop output.

The relationship of the output current to the value of the measurand is of vital importance and needs careful consideration. Any receiving equipment must, of course, be used within its rating but, if possible, some kind of standard should be established.

One of the objectives must be to have the capability to monitor the voltage over a range of values, so an upper limit must be selected, typically 120%. However, this may lead to difficulties in scaling an instrument.

The same considerations apply to current transducers outputs and with added complexity to watt transducers outputs, where both the voltage and current transformer ratios must be taken into account.

Some of these difficulties do not need to be considered if the transducer is only feeding, for example, a SCADA outstation. Any equipment which can be programmed to apply a scaling factor to each input individually can accommodate most signals. The main consideration will be to ensure that the transducer is capable of providing a signal right up to the full-scale value of the input, that is, it does not saturate at the highest expected value of the measurand.

2.22 Dynamic Line Rating (DLR) Protection (49DLR)

To meet the environmental targets laid down by governments, the distribution network is changing quickly from passive into active with a large amount of Distributed Generation (DG) such as wind farms being connected to the network.

Wind farms tend to be located at the extremes of the distribution system where overhead lines may not be rated to carry the full output of the wind farm in all circumstances. Often a line has been designed originally to supply a relatively small load, and the installation of new wind generation may cause a large reverse power flow, causing the standard winter and summer line ratings to be exceeded. The worst case in this respect is with maximum wind generation and minimum local load. Rather than applying fixed summer and winter line ratings, load management based on a dynamically derived line rating can be adopted. This takes into account the cooling effect of the wind. Such a dynamic line rating enhancement could facilitate connection of up to 30% more generation as compared to when fixed winter/summer ratings are applied and help avoid costly network reinforcement. There are also benefits for the windfarm owner if there is a constraint on the lines in that the owner can make higher revenues with higher allowable generation connected with dynamic thermal protection than using the fixed summer/winter line ratings.

2.22.1 Dynamic Line Rating (DLR) Method (49 DLR)

The thermal rating, also referred to as ampacity, of an overhead line is the maximum current that a circuit can carry without exceeding it's sag temperature or the annealing onset temperature of the conductor, whichever is lower. The sag temperature is that temperature at which the legislated height of the phase conductor above ground is met. The present practice in many utilities is to monitor the power flow in overhead lines without knowledge of the actual conductor temperature or the height of the conductor above ground. There are many variables affecting the conductor temperature, such as wind speed and direction, ambient temperature and solar radiation. As these are difficult to predict, conservative assumptions have been made so far to always ensure public safety. The main purpose of ral time line monitoring is to achieve a better utilization of the load current capacity of overhead lines while ensuring the regulatory clearances above ground are always met. Different real time line monitoring methods have been applied and evaluated as described in various publications. There are fundamentally two different ways to derive ampacity dynamically. One is by direct measurement using sensors to determine the tension, conductor temperature, or sag. Alternatively, an indirect method can be used, by measuring ambient weather conditions, from which the ampacity can be calculated by solving standard equations in real time which is implemented in the P341.

In the P341 DLR weather stations are employed to derive ampacity for use in the load management and back-up protection systems. Various computational methods have been developed in the past to calculate the heat transfer and ampacities of the conductors. Engineering Recommendation P27 which is based on Price's experimental work and statistical method has been applied commonly in the UK to calculate fixed line ratings for spring/autumn, winter or summer. The ER P27 current ratings are based on the following weather conditions: wind speed 0.5 m/s, ambient temperature: winter 2°C, spring/autumn 9°C, summer 20°C and solar radiation 0 W. The two most commonly used international standards are the CIGRE 207 standard and the IEEE 738 standard for the current-temperature relationship of the line. Both the CIGRE 207 standard and the IEEE 738 algorithms are implemented in the P341 Dynamic Line Rating protection to derive the ampacity from the weather measurements.

Comparing the IEEE and the CIGRE standards the difference in the ampacity for the most common weather conditions is less than 1%. However, in some extreme situations the difference is as high as 8.5%. The IEEE method generally calculates slightly lower

ampacity values except for high wind speeds and for wind directions essentially parallel to the line, see Figure 24, Figure 25, Figure 26 and Figure 27.

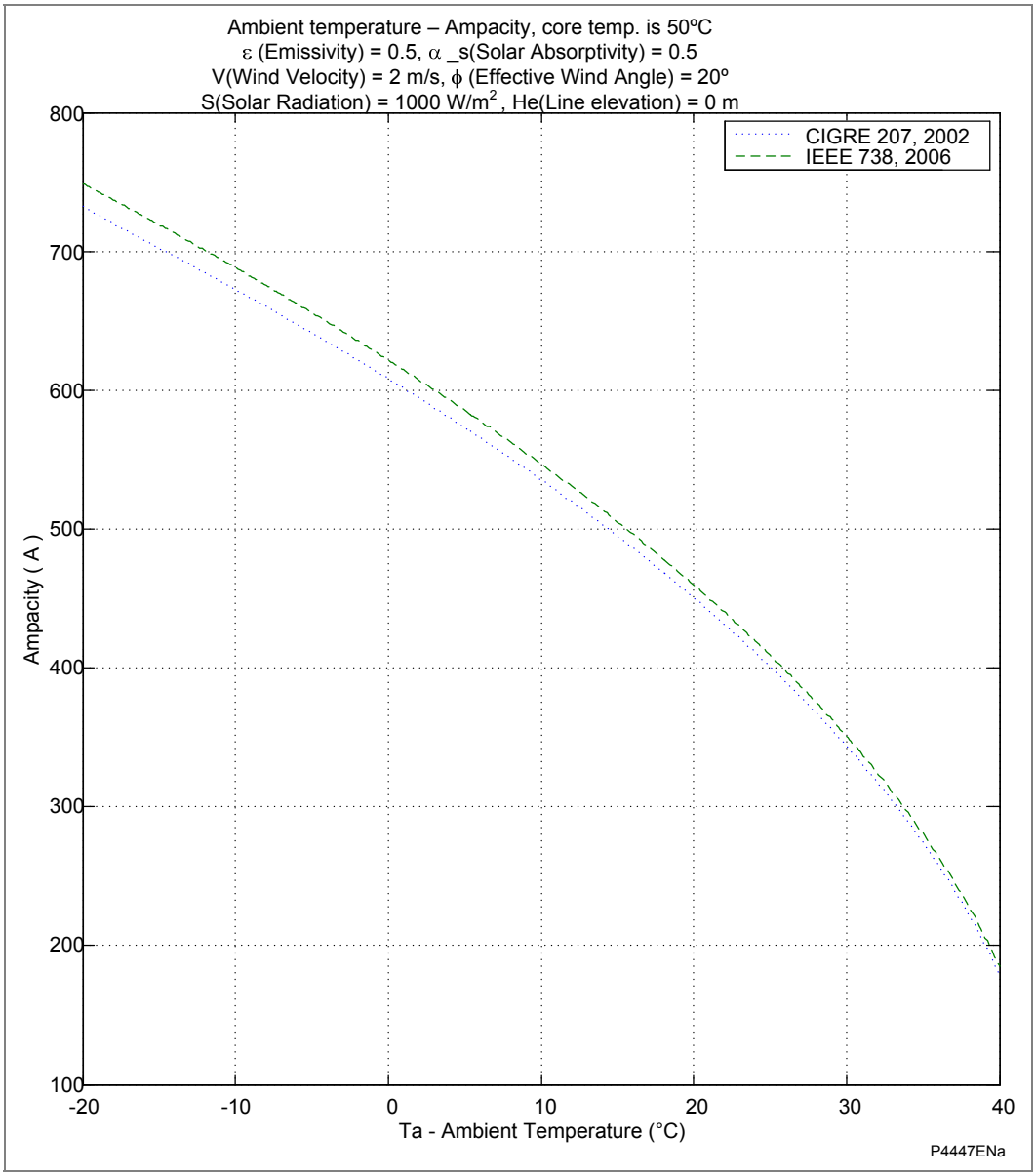

Figure 24 - Comparison of ambient temperature vs ampacity for IEEE and CIGRE standards

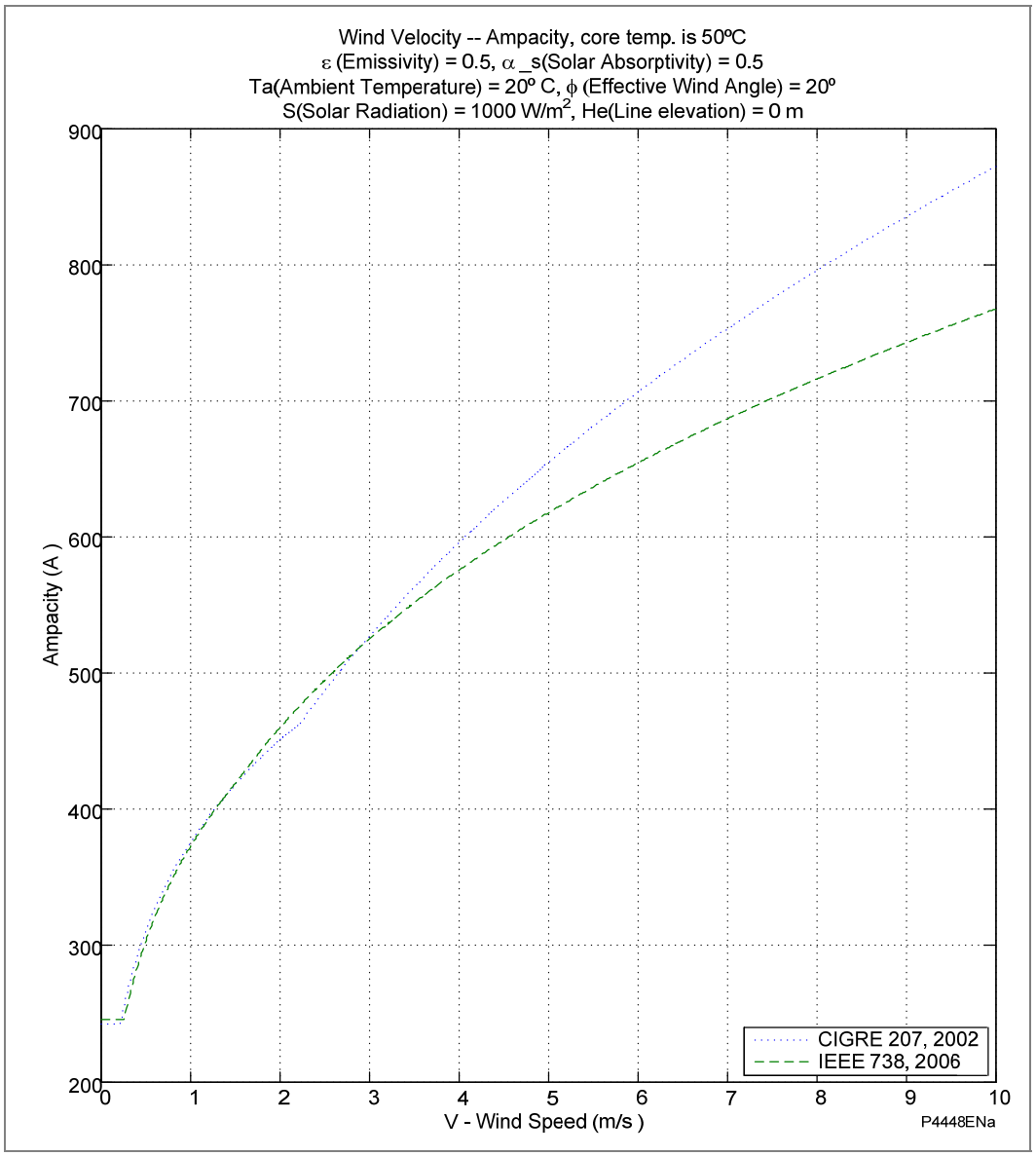

Figure 25 - Comparison of wind velocity vs ampacity for IEEE and CIGRE standards

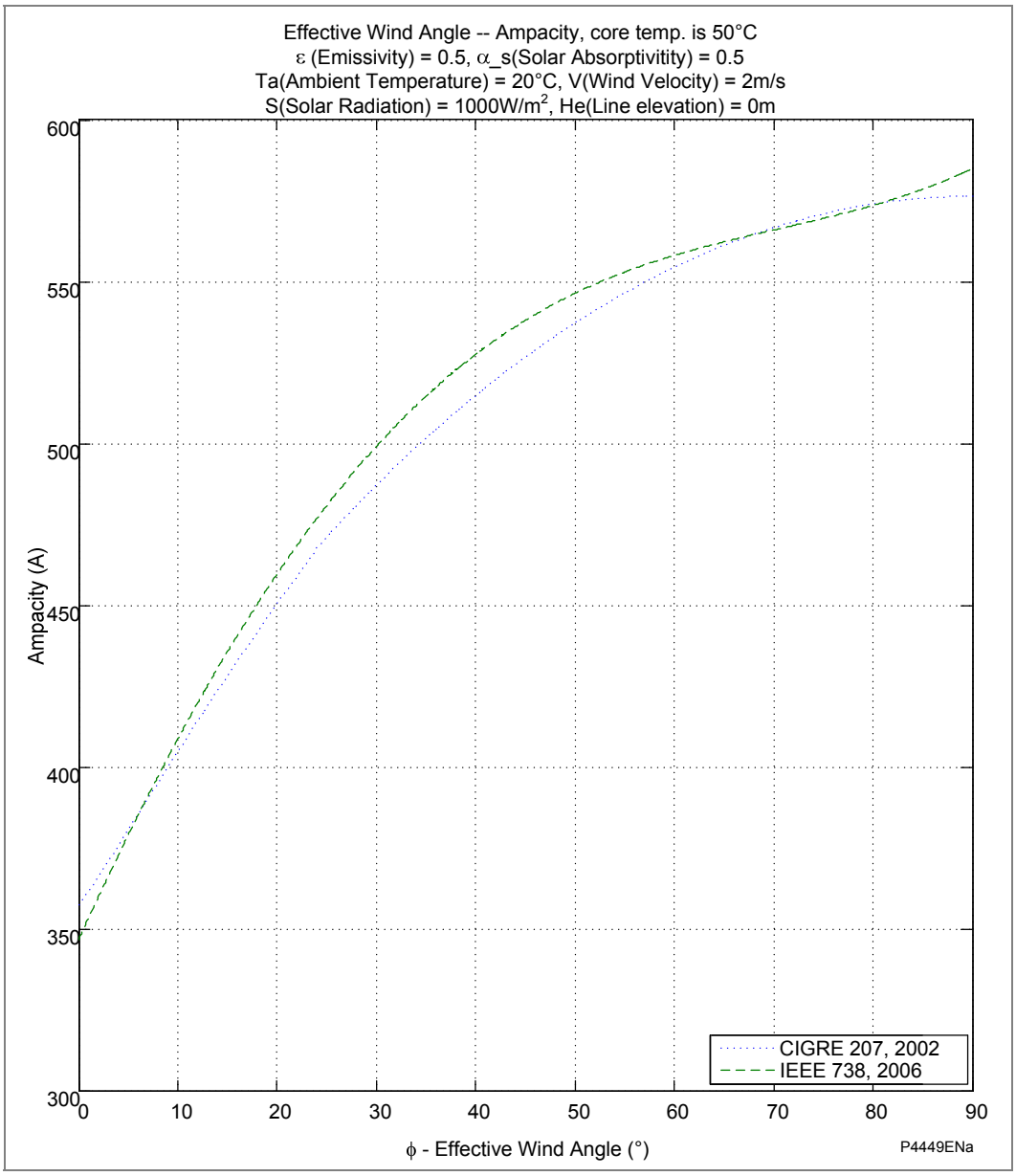

Figure 26 - Comparison of wind angle vs ampacity for IEEE and CIGRE standards

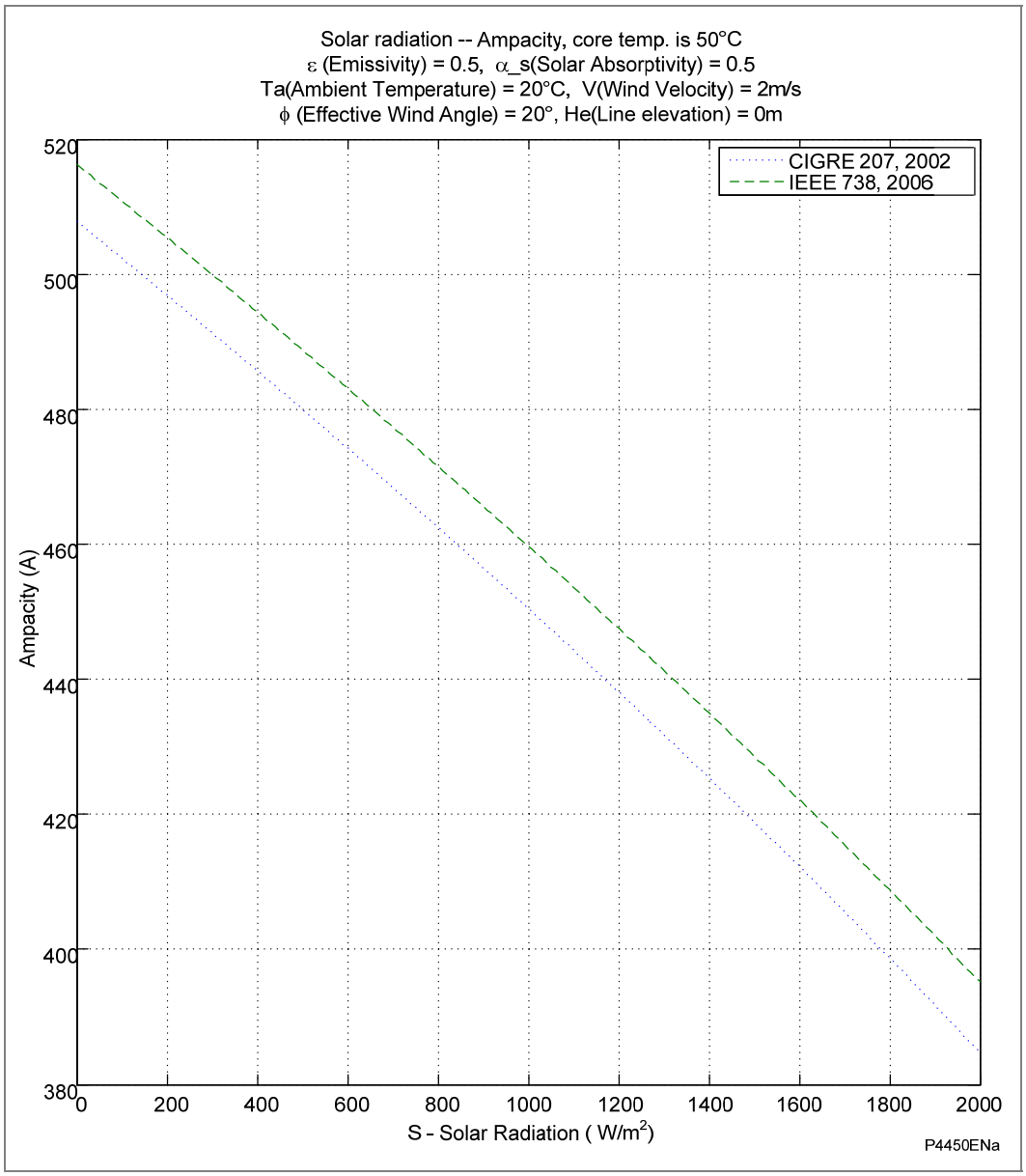

Figure 27 - Comparison of solar radiation vs ampacity for IEEE and CIGRE standards

In the DLR protection in the P341 relay the ampacity is calculated in real time using the CIGRE 207 or IEEE 738 equations. When the measured line current reaches a certain percentage of the dynamically calculated ampacity one of the 6 protection stages can be operated after a time delay. These stages can be used to provide control commands to the distributed generators to hold or reduce their power output. This may be done via the energy management control system or via the relay output contacts and a communications link to the distributed generator control system. If the control actions are not successful at reducing the ampacity, possibly due to a communications failure, as a back-up the protection relay can use one of the protection stages to trip out the distributed generation or line after a time delay. Figure 28 shows a simplified diagram of the measurements and outputs of a combined load management and protection system. In this application the load management and protection relay are both calculating the line ampacity rating from the weather station inputs.

The time delays and trip levels of the 6 protection stages are settable in the relay to provide flexibility for coordination with the load management system and other protection. The purpose of the protection stage time delays are:

- To avoid spurious tripping during temporary network faults.
- To provide a possible means of grading with other protection and grading of DG control actions.

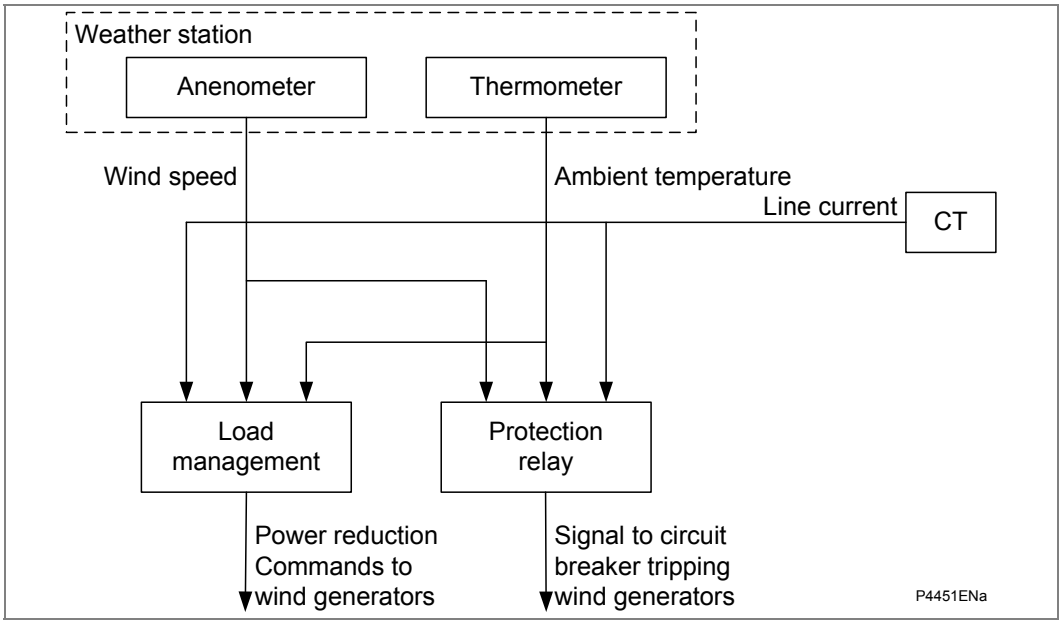

Figure 28 - Overview of weather station measurements feeding the load management and protection system

2.22.2 Example of Ampacity as a Function of Wind and Ambient Temperature

This example demonstrates how to match the CIGRE algorithm to the Engineering Recommendation P27 for line current ratings. ER P27 is a widely used current rating guide for overhead lines operating in the UK electricity system, published by the Energy Networks Association.

ER P27 recommends the following weather conditions:

- Wind speed 0.5 m/s
- Ambient temperature
  Winter: 2°C
  Spring/Autumn: 9°C
  Summer: 20°C
- Solar radiation: nil (on the basis that in the presence of sun there will always be a minimum amount of wind.)

The above conditions result in the current rating for LYNX conductor as shown in Table 5.

Conductor type	Design core temperature °C	Current rating (A)		
		Summer	Spring/Autumn	Winter
175 mm2 LYNX (30+7/2.79 mm)	50	433	501	539
	65	523	578	609
	75	574	623	651

Table 5 - ER P27 recommended current ratings for LYNX conductor

To get the most precise match to ER27 for the current rating using the CIGRE algorithm, another two parameters are required, the effective wind angle and line emissivity (these

are based on the assumption that the conductor is located at sea level, which is 0 metres elevation). The closest match to ER P27 for these two parameters can be calculated when the standard deviation is at a minimum value from iteration of these two parameters.

The best matching result is when the effective wind angle is 23° (iterated from 0 to 90° with step of 1°) and the line Emissivity is 0.94 (iterated from 0 to 1 with step of 0.01) giving a minimum standard deviation value of 0.4009. The calculated results are shown in the table below.

Conductor type	Design core temperature ºC	Current rating (A)			Standard deviation
		Summer	Spring/Autumn	Winter	
175 mm2 LYNX (30+7/2.79 mm)	50	432.5057	501.2156	539.4104	0.4009
	65	522.8915	578.1289	609.8356	
	75	573.7245	622.8396	651.3983	

Table 6 - CIGRE calculated current ratings to match ER P27 for LYNX conductor

For the example Lynx conductor type overhead line the dynamic ampacity as a function of wind speed is shown in Figure 29 for four different ambient temperatures, which have been calculated using the CIGRE equations with the conditions described above.

Figure 29 shows that for most wind speeds and ambient temperatures, the ampacity is larger than the ER P27 summer/winter ratings, however with higher ambient temperature and lower wind speeds the calculated ampacity is actually lower. The ampacity exhibits very high values, but in practice limitations in the rating due to other components (e.g. cables, joints, switchgear) in the circuit need to be taken into account, which is shown by the grey area. In this example the maximum current rating of the circuit is 650 A.

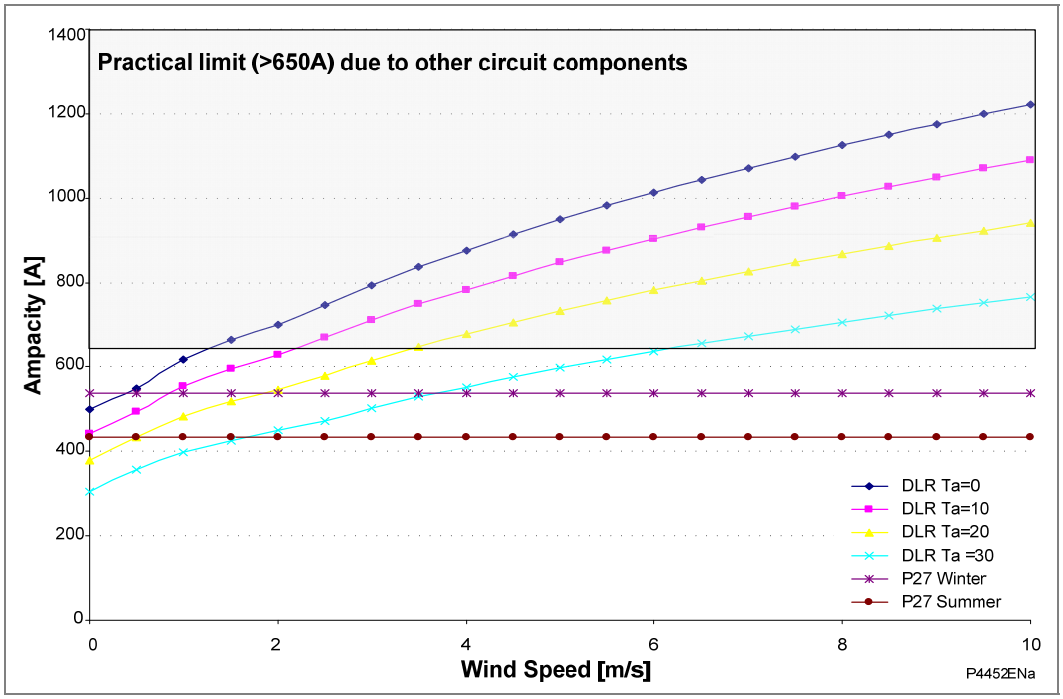

Figure 29 - Dynamic ampacity as a function of wind speed for different ambient temperatures (Ta). P27 winter and summer ratings are also included

2.22.3 Setting Guidelines

In configuring the relay it is necessary to enter a range of conductor data parameters, which are required for the heating and cooling calculations (PJ, PC, Pr and PS). To assist the user, the relay stores the relevant parameters of 36 types of British conductors which can be selected using the **Conductor Type** setting. Other conductor types can be defined if **Custom** is selected for the conductor type and additional settings become visible to define the conductor - **NonFerrous Layer**, **DC Resist per km**, **Overall Diameter**, **Outer Layer Diam**, **TotalArea(mm sq),** and **TempCoefR x0.001**. For the relay to calculate the conductor temperature the total conductor heat capacity, **mc**, and **Line Direction** parameters are required in addition. Other conductor configuration settings are also required to define the conductor toplogy and characteristics - **Solar Absorp**, **Line Emissivity**, **Line Elevation**, **Line Azimuth Min**, **Line Azimuth Max** and **T Conductor Max**. Explanations of these settings are provided in the Settings chapter, P341/EN ST.

The **Line Azimuth Min** and **Max** settings indicates the direction of the line and is used to calculate PS and PC. If the line is in one direction then the **Line Azimuth Min** and **Max** settings are the same angle. If for example the mounting direction of the anemometer 0, 360° = North and if the **Line Azimuth Min** and **Max** settings are set identical to 0 or 180° or 360° for example this indicates a line running in the same direction in the North-South direction. With a multi-direction span of a transmission line, it may be unnecessary to specify the line's azimuth because all possible angles could be evaluated for the entire line. In this situation, the **Line Azimuth Min** should be set to 0 and **Line Azimuth Max** should be set to 180° to indicate all ranges of the effective angles between the wind direction and the conductor. In this case the effective wind angle to the line is taken as the worst case = 0°. The line azimuth significantly influences the effective angle between the wind and conductor line, which is an important variable to calculate convective cooling PC.

The **Ampacity Min** and **Ampacity Max** settings are used for the calculated ampacity. This setting is used to avoid over calculating of the line ampacity for the protection stages. In practice the rating of other components e.g. cables, joints and switchgear may limit the maximum ampacity. There is a **Drop-off Ratio** setting which should be set to prevent chattering of the outputs for small variations of the ampacity around the setting. A drop-off ratio of 98%, the default value, will achieve this in most applications. For larger variations of the ampacity around the setting to maintain a more consistent trip signal the drop-off ratio can be decreased to a lower value.

If there are measurement sensors to measure the weather conditions - Ambient Temperature, Wind Velocity, Wind Direction or Solar Radiation then these can be assigned to one of the 4 the current loop (transducer) inputs in the DLR Channel Settings or can be disabled. If no measurement device is available and the current loop inputs for the weather station inputs are disabled or if the current loop input fails then a default value can be set in the Channel Settings for the Ambient Temperature, Wind Velocity, Wind Direction and Solar Radiation. In some conservative applications not all the weather sensors may be used to determine the ampacity of the line. In these applications the default fixed weather parameters could be based for example on conservative standards such as P27. This approach will not provide the biggest increase in line capacity but will provide some safety margin in applications where the weather parameters are varying widely along the protected line and may not be the worst case at the weather station position. From a DLR site trial it has been shown that that the weather parameters having a significant impact on the line rating, are in the order from lowest to highest: solar radiation, ambient temperature, wind speed and wind speed + wind angle.

Note	*Wind angle can be variable along the length of a line, depending on the topology of the land and so using wind angle as a measured variable parameter needs to be carefully considered.*

To allow for shielding or shading or different line elevation affects or to give some safety margin for the measured weather parameters the ambient temperature, wind velocity, wind direction and solar radiation correction factor settings (**Ambient T Corr**, **Wind Vel Corr**, **Wind Dir Corr** and **Solar Rad Corr**) can be used. As the weather station may not be sited near the most critical span or the worst case point for weather conditions then the correction factors can be used to correct the weather parameters used by the relay to allow for this.

For example the weather station elevation may not be at the same height as the conductors or the line may be at different heights above sea level along it's length due to the varying topology of the land. Therefore there will be some variation of the ambient temperature with height above sea level which can be corrected for using the ambient temperature correction factor. Generally, the weather station will be mounted at a lower height than the conductors where the ambient temperature will be slightly lower so this gives some safety margin or can be corrected for using the correction setting. The lapse rate is defined as the rate of decrease with height for an atmospheric variable. The variable involved is temperature unless specified otherwise. The Environmental Lapse Rate (ELR), is the rate of decrease of temperature with altitude in the stationary atmosphere at a given time and location. As an average, the International Civil Aviation Organization (ICAO) defines an international standard atmosphere (ISA) with a temperature lapse rate of 6.49 K(°C)/1,000 m from sea level to 11 km. The standard atmosphere contains no moisture. Unlike the idealized ISA, the temperature of the actual atmosphere does not always fall at a uniform rate with height. For example, there can be an inversion layer in which the temperature increases with height.

Also, the wind speed will generally be higher at higher altitudes and also near coastal regions. There could also be sections of the line which are shielded from the wind for example in forest areas and wind speeds could be corrected for these applications using the wind speed correction factor.

The wind blows faster at higher altitudes because of the drag of the surface (sea or land) and the viscosity of the air. The variation in velocity with altitude, called wind shear, is most pronounced near the surface. Typically, in daytime the variation follows the 1/7th power law, which predicts that wind speed rises proportionally to the seventh root of altitude. In the night time, or when the atmosphere becomes stable, wind speed close to the ground usually subsides whereas at higher altitudes it does not decrease that much or may even increase. A stable atmosphere is caused by radiative cooling of the surface and is common in a temperate climate, it usually occurs when there is a (partly) clear sky at night. When the (high altitude) wind is strong (10 meter wind speed higher than approximately 6 to 7 m/s) the stable atmosphere is disrupted because of friction turbulence and the atmosphere will turn neutral. A daytime atmosphere is either neutral (no net radiation; usually with strong winds and/or heavy clouding) or unstable (rising air because of ground heating -by the sun). Here again the 1/7th power law applies or is at least a good approximation of the wind profile.

Studies should be done to evaluate the worst case conditions for different spans of the line for the weather parameters to assess the best use of any correction factors.

The Maximum and Minimum settings (Ambient T Min/Max, **Wind Vel Min/Max**, **Wind Dir Min/Max**, Solar Rad Min/Max) under the DLR Channel Settings allows the user to set low and high cut-off limits for the weather measurements that will be used by the DLR algorithm. If no limits are required then these settings can be set the same as the Minimum and Maximum values for the current loop (transducer) inputs for the Ambient Temperature, Wind Velocity, Wind Direction and Solar Radiation. These limits can be used to limit the weather sensor measurements to sensible values in case the sensors fail in such a way that they give an unrealistic value.

If the Wind Velocity, Wind Direction or Solar Radiation is changing quickly then the averaging time settings will help to smooth out the ampacity calculations. A typical setting for the averaging time is 10 minutes for these weather parameters. The conductor temperature will tend to follow the ambient temperature changes much more quickly than the cooling effect of the wind and heating effect of the current which have a thermal time

constant. Therefore, an averaging setting of 0 s is recommended for the ambient temperature. The averaging setting will impact the rate at which the ampacity is updated so this will affect the operating time of the protection and needs to be considered.

For the ambient temperature, wind velocity, wind direction and solar radiation the transducer (current loop input) type can be selected from four types with ranges 0-1 mA, 0-10 mA, 0-20 mA or 4-20 mA. The current loop input maximum and minimum settings (**Amb T Min/Max**, **WV I/P Minimum/Maximum**, **WD I/P Minimum/Maximum**, **SR I/P Minimum/Maximum**) allow the user to enter the measurement range capability of the physical quantity measured by the transducer.

For the 4-20 mA inputs a current level below 4 mA indicates that there is a fault with the transducer or the wiring. An instantaneous undercurrent alarm element is available with a setting range 0-4 mA. This element controls an output signal (Amb T Fail Alm, Wind V Fail Alm, Wind D Fail Alm, Solar R Fail Alm, DDB 396-399) which can be mapped to a user defined alarm if required.

There are a total of 6 trip elements, all of which will have their own threshold level as a percentage of the line ampacity and definite time delay settings. There is also an inhibit input for each protection element, which can be used to inhibit its operation in case of failures of the weather station or to inhibit one relay if another has operated first and is taking some action. These trip stages can be used to provide alarms and commands to the generation directly to HOLD or REDUCE or STOP at specific levels of ampacity below the trip level. Alternatively, they can be used for indication or alarms if a separate load management system is providing control to the generation. If the control actions are not successful at reducing the ampacity and the ampacity reaches a critical level for example 100%, possibly due to a communications failure, as a back-up the relay can use one of protection stages to trip out the distributed generation or line after a time delay. The time delay settings are used to avoid spurious tripping during transient network faults and allow discrimination with other protection functions and are also used to provide coordination with the load management system to allow time for the wind farm to take action before another DLR stage operates.

3 APPLICATION OF NON-PROTECTION FUNCTIONS

3.1 Check Synchronisation

3.1.1 Basic Principle

If a circuit breaker is closed when the generator and bus voltages are both live, with a large phase angle, frequency or magnitude difference between them, the system could be subjected to an unacceptable shock, resulting in loss of stability, and possible damage to the connected generator and generator-transformer.

System checks involve monitoring the voltages on both sides of a circuit breaker, and if both sides are live, performing a synchronism check to determine whether the phase angle, frequency and voltage magnitude differences between the voltage vectors, are within permitted limits.

The pre-closing system conditions for a given circuit breaker depend on the system configuration and for auto-reclosing depend on the selected auto-reclose program. For example, on a feeder with delayed auto-reclosing, the circuit breakers at the two line ends are normally arranged to close at different times. The first line end to close usually has a live bus and a dead line immediately before reclosing, and charges the line (dead line charge) when the circuit breaker closes. The second line end circuit breaker sees live bus and live line after the first circuit breaker has re-closed. If there is a parallel connection between the ends of the tripped feeder, they are unlikely to go out of synchronism, i.e. the frequencies will be the same, but the increased impedance could cause the phase angle between the two voltages to increase. Therefore the second circuit breaker to close might need a synchronism check, to ensure that the phase angle has not increased to a level that would cause an unacceptable shock to the system when the circuit breaker closes.

If there are no parallel interconnections between the ends of the tripped feeder, the two systems could lose synchronism, and the frequency at one end could slip relative to the other end. In this situation, the second line end would require a synchronism check comprising both phase angle and slip frequency checks.

If the second line end busbar has no power source other than the feeder that has tripped; the circuit breaker will see a live line and dead bus assuming the first circuit breaker has re-closed. When the second line end circuit breaker closes the bus will charge from the live line (dead bus charge).

For generator applications before closing the CB the frequency and voltage from the machine is varied automatically or manually until the generator voltage is in synchronism with the power system voltage. A check synchronizing relay is used to check the generator voltage is in synchronism with the system voltage in terms of voltage magnitude, voltage difference, phase angle and slip frequency before the generator CB is allowed to close.

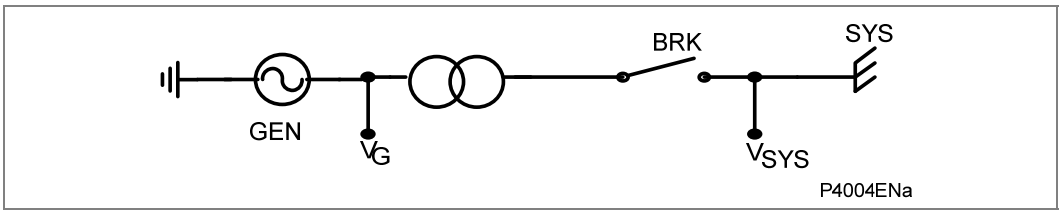

Figure 30 - Typical connection between system and generator-transformer unit

3.1.2 VT Selection

The P341 has a three-phase Main VT input and a single-phase Check Sync VT input. Depending on the primary system arrangement, the main three-phase VT for the relay may be located on either the busbar side or the generator side of the circuit breaker, with the Check Sync VT being located on the other side. Hence, the relay has to be programmed with the location of the main VT. This is done via the Main VT Location - Gen/Bus setting in the SYSTEM CONFIG menu. This is required for the voltage monitors to correctly define the Live Gen/Dead Gen and Live Bus/Dead Bus DDBs.

The Check Sync VT may be connected to either a phase to phase or phase to neutral voltage, and for correct synchronism check operation, the relay has to be programmed with the required connection. The C/S Input setting in the CT & VT RATIOS menu should be set to A-N, B-N, C-N, A-B, B-C or C-A as appropriate.

The P341 (40TE case) uses the neutral voltage input, VNeutral, for the Check Synch VT and so the user can not use check synch and measured neutral voltage (59N) protection (VN>3, VN>4) at the same time. The derived neutral voltage protection (VN>1, VN>2) from the 3 phase voltage input can still be used with the check synchronizing function.

The P341 (60TE case) uses a dedicated V Check Sync voltage input for the Check Synch VT and so there are no restrictions in using the check synchronising function and other protection functions in the relay.

3.1.3 Voltage and Phase Angle Correction

3.1.3.1 CS VT Ratio Correction

Differences in the busbar voltage and the generator voltage magnitude may be introduced by unmatched or slightly erroneous voltage transformer or step-up transformer ratios. These differences should be small, but they may be additive and therefore be significant. In order to compensate magnitude differences between the busbar voltage and the generator voltage the generator voltage can be adjusted by a multiplying factor, C/S V Ratio Corr to correct for any mismatch.

The voltage correction factor can be calculated as shown below:

$$\frac{TVR \times VTG}{VTB}$$

Where:
TVR = step-up transformer voltage ratio (HV nominal /LV nominal)
VTG = generator voltage transformer ratio (**Main VT Primary/Main VT Sec'y**)
VTB = busbar voltage transformer ratio (**C/S VT Prim'y/C/S VT Sec'y**)

For example,

IF TVR = 38.5 kV /10.5 kV, VTG = 10 kV/100 V, VTB = 35 kV/100 V AND Vgen = VGab, Vbus = VBab

Then, Vgen = 10500/100 = 105 V (secondary voltage), Vbus = 38500/350 = 110 V, and:

$$\textbf{C/S V Ratio Corr} = \frac{TVR \times VTG}{VTB} = 1.0476$$

So: Vgen' = Vgen x **C/S V Corr** = 110 V = Vbus

3.1.3.2 CS VT Vector Correction

If the generator CB is on the HV side the generator step-up transformer typically with the synch VT on the transformer HV side, the P34x uses the **Main VT Vect Grp** setting to compensate the phase shift between the generator VTs and the synch VT introduced by the transformer connections:

$$V_{gen,angle\_comp} = V_{gen} e^{jN30^{\circ}}$$

Here, N = Main VT Vector Group, N = 0, 1,…11.

The generator voltage, Vgen, compensated phase shift is $N \times 30^{\circ}$. In most cases, N is 1, 11 and 0, and the corresponding compensated phase shift is +30°, -30° (330°) and 0°. The vector group (N) is 0 for the Main VT and synch VT on the generator side of the transformer or if there is no step-up transformer.

For example, when the step-up transformer connection type is Yd11, the LV Clock Vector is at 11 o'clock, the connection and vector diagrams are as below. Usually, the Main VT is on the generator LV side of the transformer so the **Main VT Vect Grp** matches the vector group of the transformer, eg **Main VT Vect Grp** = 11 for a Yd11 transformer.

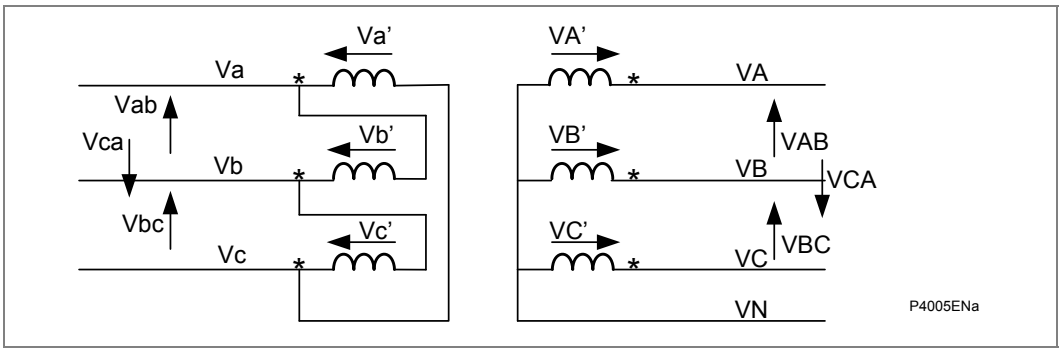

Figure 31 - Typical connection between system and generator-transformer unit Transformer connection

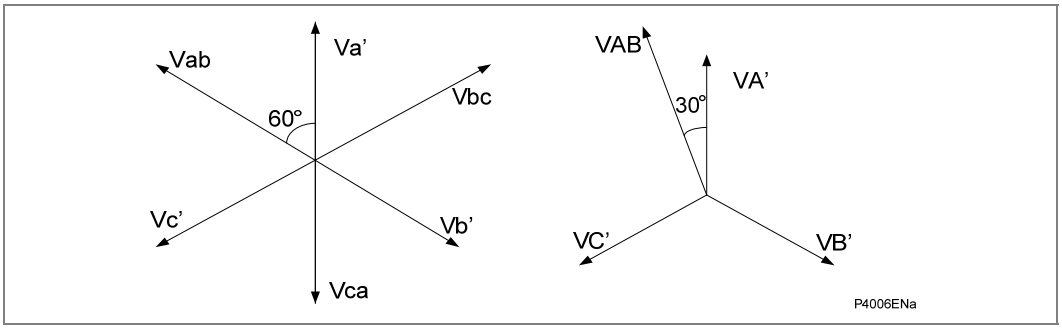

Figure 32 - Transformer vector diagram

It can been seen that $Vab = -Vb'$, The vector Vab is forward to VAB 30º,so the compensated phase shift should be -30°, that is vector Vab should be rotated 30° clockwise, **Main VT Vect Grp** = 11, assuming Main VT is on transformer LV side.

3.1.4 Voltage Monitors

The P341 System Checks function includes voltage monitors to indicate if the generator and system busbar voltages are Live or Dead. The voltage monitor signals are not usually used for the closing logic of a generator CB, the check synch logic is generally only used for this application. The voltage monitor signals are typically used in feeder

autoreclose applications where the first feeder CB to close may use the voltage monitor signals to check for Live Bus/Dead Line for example. The default settings are typical values, Dead = 0.2 Vn and Live = 0.5 Vn.

The voltage monitor DDBs, if required, are combined in the PSL to provide the manual CB close check synchronizing logic, eg Dead Line/Live Gen (The P341 does not include autoreclose logic). The DDBs are connected to the Man Check Synch DDB (1362) which provides an input to the CB control logic to indicate a manual check synchronizing condition is satisfied.

The voltage monitor signals can be useful in generator applications to give indication if the generator or system busbar voltages are Live or Dead or can be used with timers in the PSL to provide additional under/overvoltage protection.

When Vgen magnitude is > Live Voltage, the generator is taken as Live (DDB 1328, Live Gen)

When Vgen magnitude is < Dead Voltage, the generator is taken as Dead (DDB 1329, Dead Gen)

When Vbus magnitude is > Live Voltage, the busbar is taken as Live (DDB 1330, Live Bus)

When Vbus magnitude is < Dead Voltage, the busbar is taken as Dead (DDB 1331, Dead Bus)

3.1.5 Check Synchronization

The P341 System Checks function includes 2 check synchronization elements, Check Sync 1 and Check Sync 2. The check synch 1 OK (1332) and Check Synch 2 OK (1333) DDBs, if required, are used in the PSL to provide the manual CB close check synchronising logic. The DDBs are connected to the Man Check Synch DDB (1362) which provides an input to the CB control logic to indicate a manual check synchronising condition is satisfied.

Each check synch element checks that the generator frequency, voltage magnitude, and phase angle match the system frequency, voltage magnitude, and phase angle before allowing the generator breaker to be closed. Each element includes settings for the phase angle difference and slip frequency between the generator and system busbar voltages.

The P341 also includes independent under/over voltage monitors for the generator and system side of the CB as well as a differential voltage monitor applicable to both the Check Sync 1 and 2 elements. The user can select a number of under/over/differential voltage check synchronizing blocking options using the setting **CS Voltage Block - None**, **V<**, **V>**, **Vdiff>**, **V< and V>**, **V< and Vdiff>**, **V> and Vdiff>**, **V< V> Vdiff>**.

3.1.5.1 Slip Control

The slip frequency used by Check Synch 1/2 can be calculated from the **CS1/2 Phase Angle** and **CS1/2 Slip Timer** settings as described below or can be measured directly from the frequency measurements, slip frequency = |Fgen-Fbus|. The user can select a number of slip frequency options using the settings **CS1 Slip Control - None**, **Timer Only**, **Frequency Only**, **Both** and **CS2 Slip Control - None**, **Timer**, **Frequency**, **Timer + Freq**, **Freq** + **CB Comp**.

If Slip Control by Timer or Frequency + Timer/Both is selected, the combination of CS Phase Angle and CS Slip Timer settings determines an effective maximum slip frequency, calculated as:

$$\frac{2 \times A}{T \times 360}$$ Hz. for Check Sync. 1, or

$$\frac{A}{T \times 360}$$ Hz. for Check Sync. 2

A = Phase Angle setting (°)
T = Slip Timer setting (seconds)

For example, for Check Sync 1 with **CS 1 Phase Angle** setting 30° and **CS 1 Slip Timer** setting 3.3 sec., the "slipping" vector has to remain within ±30° of the reference vector for at least 3.3 seconds. Therefore, a synchronism check output will not be given if the slip is greater than 2 x 30° in 3.3 seconds. Using the formula: 2 x 30 ÷ (3.3 x 360) = 0.0505 Hz (50.5 mHz).

For Check Sync 2, with **CS2 Phase Angle** setting 10° and **CS2 Slip Timer** setting 0.1 sec., the slipping vector has to remain within 10° of the reference vector, with the angle decreasing, for 0.1 sec. When the angle passes through zero and starts to increase, the synchronism check output is blocked. Therefore an output will not be given if slip is greater than 10° in 0.1 second. Using the formula: 10 ÷ (0.1 x 360) = 0.278 Hz (278 mHz).

Slip control by **Timer** is not practical for "large slip/small phase angle" applications, because the timer settings required are very small, sometimes < 0.1 s. For these situations, slip control by **Frequency** is recommended.

If **CS Slip Control** by **Frequency + Timer** (CS1) or **Both** (CS2) is selected, for an output to be given, the slip frequency must be less than BOTH the set **CS1/2 Slip Freq** value and the value determined by the **CS1/2 Phase Angle** and **CS1/2 Slip Timer** settings.

3.1.5.2 CB closing time compensation

The **CS2 Slip Control - Freq + Comp** (Frequency + CB Time Compensation) setting modifies the Check Sync 2 function to take account of the circuit breaker closing time. By measuring the slip frequency, and using the **CB Close Time** setting, the relay will issue the close command so that the circuit breaker closes at the instant the slip angle is equal to the **CS2 Phase Angle** setting.

The equation below describes the relationship between the compensated angle δ_K and the lead time to CB closing t_K for the circuit breaker to close at the instant the slip angle is equal to the CS2 phase angle setting, assuming the slip frequency is constant.

$$\delta_{MEA} - CS2\,phaseangle = \delta_K = \Delta\omega \times t_K$$

$$t_K = \frac{\delta_{MEA} - CS2\,phaseangle}{\Delta\omega} = \frac{\delta_{MEA} - CS2\,phaseangle}{Slip.Freq. \times 360^o}$$

δ_{MEA} = Mea.Angle

$\Delta\omega$ = slip angle velocity

δ_K = compensated angle

t_K = lead time to CB close

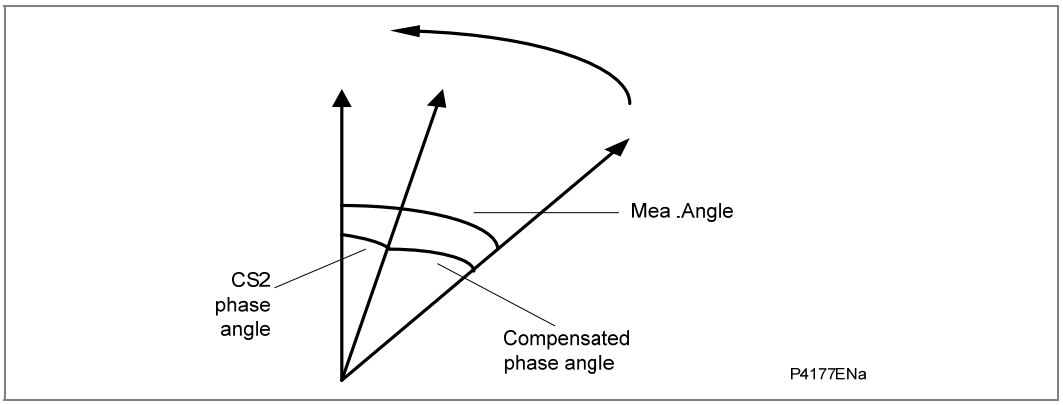

Figure 33 - Check synch. 2 phase angle diagram

Unlike Check Sync 1, Check Sync 2 only permits closure for decreasing angles of slip, therefore the circuit breaker should always close within the limits defined by Check Sync 2. When CS2 phase angle = 0, the breaker should be closed just when the voltages are in phase with each other.

The **CB Close Time** measurement is available in the **CB Condition** menu for the last CB close. The relay calculates the **CB Close Time** from the time the close command is given to the time the CB is closed as indicated by the 3 pole dead logic. The **CB close Time** measurement can be useful when setting the **CB Close Time** compensation setting in the **System Checks** menu.

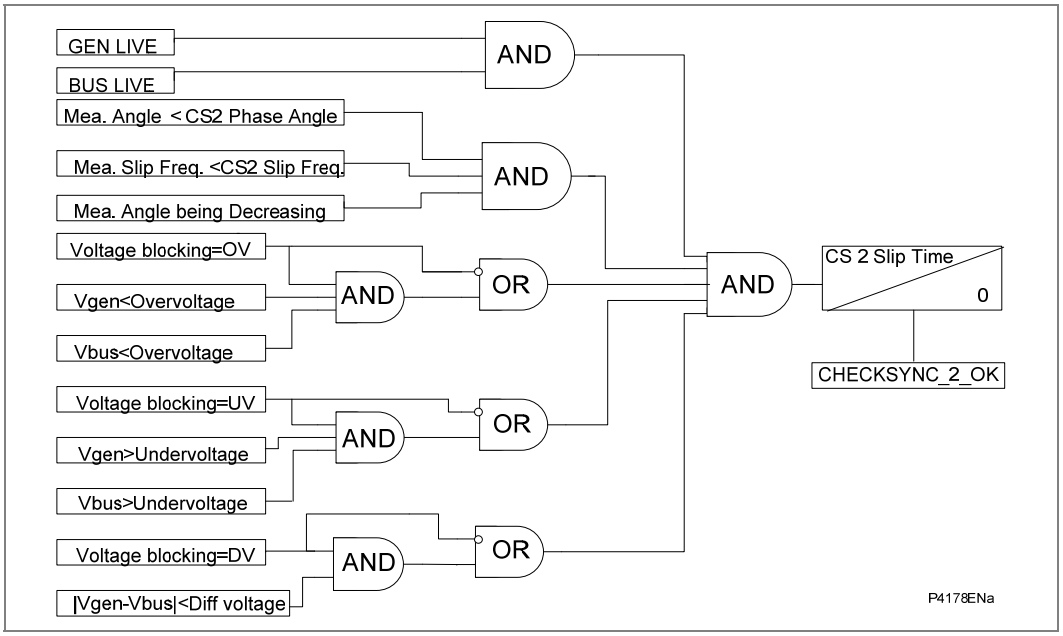

Figure 34 - Check synch. 2 functional diagram

3.1.5.3 Check Sync 2 and System Split

Check Sync 2 and system split functions are included for situations where the maximum permitted slip frequency and phase angle for synchronism check can change according to actual system conditions. A typical application is on a closely interconnected system, where synchronism is normally retained when a given feeder is tripped, but under some circumstances, with parallel interconnections out of service, the feeder ends can drift out of synchronism when the feeder is tripped. Depending on the system and machine characteristics, the conditions for safe circuit breaker closing could be, for example:

Condition 1: For synchronized systems, with zero or very small slip:

Slip ≦50 mHz; phase angle <30°

Condition 2: For unsynchronized systems, with significant slip:

Slip ≦250 mHz; phase angle <10° and decreasing

By enabling both Check Sync 1, set for condition 1, and Check Sync 2, set for condition 2, the P34x can be configured to allow CB closure if either of the two conditions is detected.

For manual circuit breaker closing with synchronism check, some utilities might prefer to arrange the logic to check initially for condition 1 only. However, if a System Split is detected before the condition 1 parameters are satisfied, the relay will switch to checking for condition 2 parameters instead, based on the assumption that a significant degree of slip must be present when system split conditions are detected. This can be arranged by suitable PSL logic, using the system check DDB signals.

3.1.5.4 Generator Check Synchronizing

For generator CB closing applications generally there is only one synchronism check element required and so Check Sync 1 or Check Sync 2 is used.

The Check Sync 2 element includes CB closing time compensation and unlike Check Sync 1, Check Sync 2 only permits closure for decreasing angles of slip.

There are several synchronizing methods that may be used to minimize the possibility of damaging a generator when closing the generator CB:

- Automatic synchronizing
- Semi-automatic synchronizing
- Manual synchronizing

Synchronizing check relays are often applied with all these schemes to supervise the closing of the CB.

To avoid damaging a generator during synchronizing, the generator manufacturer will generally provide synchronizing limits in terms of breaker closing angle and voltage matching. Typical limits are:

1. Breaker closing angle: ±10 electrical degrees. The closing of the circuit breaker should ideally take place when the generator and the system are at or close to zero degrees phase angle with respect to each other. To accomplish this, the breaker should be set to close in advance of the phase angle coincidence taking into account the breaker closing time.
2. Voltage matching: 0% to +5%. The voltage difference should be minimized and not exceed 5%. This aids in maintaining system stability by ensuring some VAR flow into the system. Additionally, if the generator voltage is excessively lower than the grid when the breaker is closed, sensitive reverse power relays may trip.
3. Slip frequency: <0.067 Hz. The slip frequency should be minimized to the practical control/response limitations of the given prime mover. A large frequency difference causes rapid load pickup or excessive motoring of the machine. This could cause power swings on the system and mechanical torques on the machine. Additionally, if the machine is motored, sensitive reverse power relays may trip.

   Slip frequency limits applied for certain machine types are based on the ruggedness of the turbine generator under consideration and the controllability of the turbine generator and MVA.

   To prevent power flow from the system to the generator, some large steam turbine generators require that a low, positive slip be present when the generator breaker is closed. In contrast, Diesel generators may require that a zero or negative slip be

present to unload the machine shaft and crank briefly when the generator breaker is closed. The DDBs CS1/2 Slipfeq>, CS1/2 Slipfeq<, CS Ang Rot ACW and CS Ang Rot CW can be used as interlocking signals to the ManCheck Synch DDB for these applications.

3.1.6 Frequency/Voltage Control

The DDBs, CS Vgen>Vbus, CS Vgen<Vbus, CS1 Fgen>Fbus, CS1 Fgen<Fbus, CS2 Fgen>Fbus and CS2 Fgen<Fbus can be used for simple frequency control and voltage control outputs or for indication purposes. Pulsed outputs can be achieved using PSL if required.

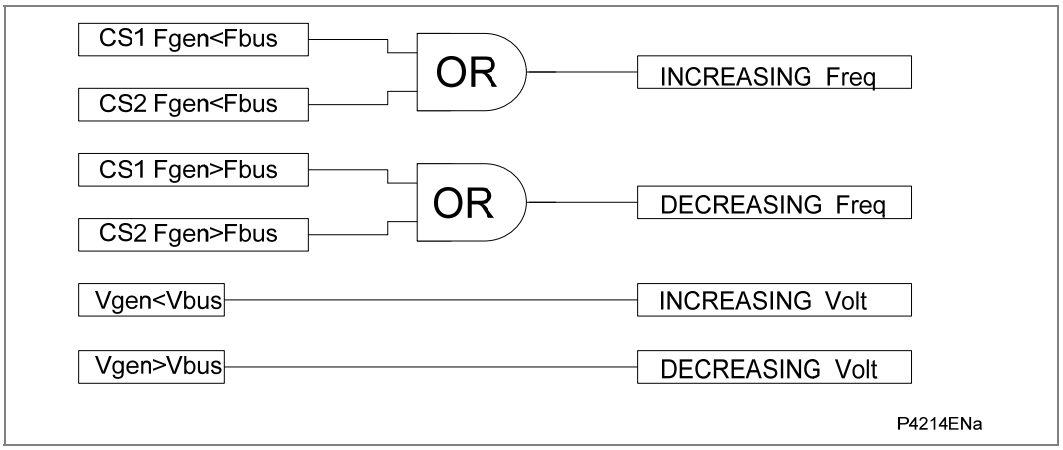

Figure 35 - Freq/Volt control functional diagram

3.2 VT Supervision (VTS)

The Voltage Transformer Supervision (VTS) feature is used to detect failure of the ac voltage inputs to the relay. This may be caused by internal voltage transformer faults, overloading, or faults on the interconnecting wiring to relays. This usually results in one or more VT fuses blowing. Following a failure of the ac voltage input there would be a misrepresentation of the phase voltages on the power system, as measured by the relay, which may result in mal-operation.

The VTS logic in the relay is designed to detect the voltage failure, and automatically adjust the configuration of protection elements whose stability would otherwise be compromised. A time-delayed alarm output is also available.

3.2.1 Setting the VT Supervision Element

The **VTS Status** setting **Blocking/Indication** determines whether the following operations will occur upon detection of VTS.

- VTS set to provide alarm indication only.
- Optional blocking of voltage dependent protection elements.
- Optional conversion of directional overcurrent elements to non-directional protection (available when set to blocking mode only). These settings are found in the function links cell of the relevant protection element columns in the menu.

The VTS block will be latched after a user settable time delay **VTS Time Delay**. Once the signal has latched then two methods of resetting are available. The first is manually via the front panel interface (or remote communications) when the **VTS Reset Mode** is set to **Manual**. The second method is automatically when **VTS Reset Mode** is set to **Auto** mode, provided the VTS condition has been removed and the 3 phase voltages have been restored above the phase level detector settings for more than 240 ms.

The **VTS I> Inhibit** overcurrent setting is used to inhibit the voltage transformer supervision in the event of a loss of all 3 phase voltages caused by a close up 3 phase fault occurring on the system following closure of the CB to energize the line. This element should be set in excess of any non-fault based currents on line energization (load, line charging current, transformer inrush current if applicable) but below the level of current produced by a close up three-phase fault.

This **VTS I2> Inhibit** NPS overcurrent setting is used to inhibit the voltage transformer supervision in the event of a fault occurring on the system with negative sequence current above this setting

The NPS current pick-up threshold must be set higher than the negative phase sequence current due to the maximum normal load unbalance on the system. This can be set practically at the commissioning stage, making use of the relay measurement function to display the standing negative phase sequence current, and setting at least 20% above this figure.

3.3 CT Supervision (CTS)

The Current Transformer Supervision (CTS) feature is used to detect failure of one or more of the ac phase current inputs to the relay. Failure of a phase CT or an open circuit of the interconnecting wiring can result in incorrect operation of any current operated element. Additionally, interruption in the ac current circuits risks dangerous CT secondary voltages being generated.

3.3.1 Setting the Differential CTS Element

The residual voltage setting, **CTS Vn< Inhibit** and the residual current setting, **CTS In> set**, should be set to avoid unwanted operation during healthy system conditions.

For example **CTS Vn< Inhibit** should be set to 120% of the maximum steady state residual voltage. The **CTS In> set** will typically be set below minimum load current. The time-delayed alarm, **CTS Time Delay**, is generally set to 5 seconds.

Where the magnitude of residual voltage during an earth fault is unpredictable, the element can be disabled to prevent a protection elements being blocked during fault conditions.

3.4 Circuit Breaker Condition Monitoring

Periodic maintenance of circuit breakers is necessary to ensure that the trip circuit and mechanism operate correctly, and also that the interrupting capability has not been compromised due to previous fault interruptions. Generally, such maintenance is based on a fixed time interval, or a fixed number of fault current interruptions. These methods of monitoring circuit breaker condition give a rough guide only and can lead to excessive maintenance.

3.4.1 Setting Guidelines

3.4.1.1 Setting the Σ I^ Thresholds

Where overhead lines are prone to frequent faults and are protected by Oil Circuit Breakers (OCBs), oil changes account for a large proportion of the life cycle cost of the switchgear. Generally, oil changes are performed at a fixed interval of circuit breaker fault operations. However, this may result in premature maintenance where fault currents tend to be low, and hence oil degradation is slower than expected. The Σ I^ counter monitors the cumulative severity of the duty placed on the interrupter allowing a more accurate assessment of the circuit breaker condition to be made.

For OCBs, the dielectric withstand of the oil generally decreases as a function of Σ I2t. This is where 'I' is the fault current broken, and 't' is the arcing time within the interrupter tank (not the interrupting time). As the arcing time cannot be determined accurately, the relay would normally be set to monitor the sum of the broken current squared, by setting **Broken I^** = 2.

For other types of circuit breaker, especially those operating on higher voltage systems, practical evidence suggests that the value of **Broken I^** = 2 may be inappropriate. In such applications **Broken I^** may be set lower, typically 1.4 or 1.5. An alarm in this instance may be indicative of the need for gas/vacuum interrupter HV pressure testing, for example.

The setting range for **Broken I^** is variable between 1.0 and 2.0 in 0.1 steps. It is imperative that any maintenance program must be fully compliant with the switchgear manufacturer's instructions.

3.4.1.2 Setting the Number of Operations Thresholds

Every operation of a circuit breaker results in some degree of wear for its components. Thus, routine maintenance, such as oiling of mechanisms, may be based upon the number of operations. Suitable setting of the maintenance threshold will allow an alarm to be raised, indicating when preventative maintenance is due. Should maintenance not be carried out, the relay can be set to lockout the auto-reclose function on reaching a second operations threshold. This prevents further reclosure when the circuit breaker has not been maintained to the standard demanded by the switchgear manufacturer's maintenance instructions.

Certain circuit breakers, such as Oil Circuit Breakers (OCBs) can only perform a certain number of fault interruptions before requiring maintenance attention. This is because each fault interruption causes carbonizing of the oil, degrading its dielectric properties. The maintenance alarm threshold **No CB Ops Maint** may be set to indicate the requirement for oil sampling for dielectric testing, or for more comprehensive maintenance.

Again, the lockout threshold **No CB Ops Lock** may be set to disable auto-reclosure when repeated further fault interruptions could not be guaranteed. This minimizes the risk of oil fires or explosion.

3.4.1.3 Setting the Operating Time Thresholds

Slow CB operation is also indicative of the need for mechanism maintenance. Therefore, alarm and lockout thresholds (**CB Time Maint./CB Time Lockout**) are provided and are settable in the range of 5 to 500 ms. This time is set in relation to the specified interrupting time of the circuit breaker.

3.4.1.4 Setting the Excessive Fault Frequency Thresholds

A circuit breaker may be rated to break fault current a set number of times before maintenance is required. However, successive circuit breaker operations in a short period of time may result in the need for increased maintenance. For this reason it is possible to set a frequent operations counter on the relay which allows the number of operations **Fault Freq Count** over a set time period **Fault Freq Time** to be monitored. A separate alarm and lockout threshold can be set.

3.5 Trip Circuit Supervision (TCS)

The trip circuit, in most protective schemes, extends beyond the relay enclosure and passes through components such as fuses, links, relay contacts, auxiliary switches and other terminal boards. This complex arrangement, coupled with the importance of the trip circuit, has led to dedicated schemes for its supervision.

Several Trip Circuit Supervision (TCS) schemes with various features can be produced with the P34x range. Although there are no dedicated settings for TCS, in the P34x, the following schemes can be produced using the Programmable Scheme Logic (PSL). A user alarm is used in the PSL to issue an alarm message on the relay front display. If necessary, the user alarm can be re-named using the menu text editor to indicate that there is a fault with the trip circuit.

3.5.1 TCS Scheme 1

3.5.1.1 Scheme Description

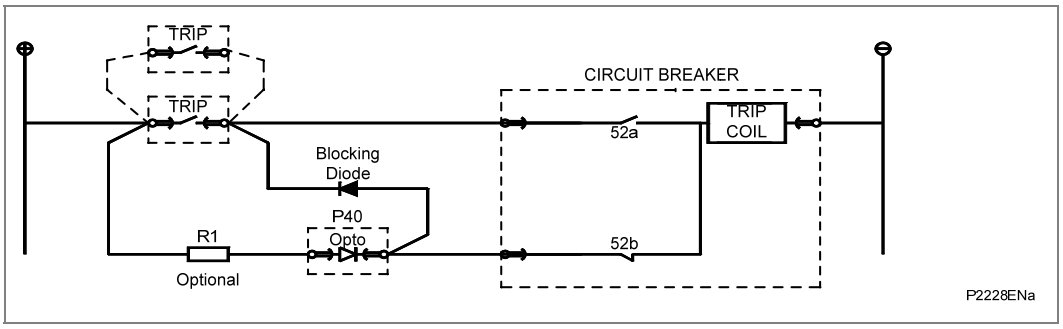

Figure 36 - TCS scheme 1

This scheme provides supervision of the trip coil with the breaker open or closed, however, pre-closing supervision is not provided. This scheme is also incompatible with latched trip contacts, as a latched contact will short out the opto for greater than the recommended DDO timer setting of 400 ms. If breaker status monitoring is required a further 1 or 2 opto inputs must be used.

Note	*A 52a CB auxiliary contact follows the CB position and a 52b contact is the opposite.*

When the breaker is closed, supervision current passes through the opto input, blocking diode and trip coil. When the breaker is open current still flows through the opto input and into the trip coil via the 52b auxiliary contact.

Hence, no supervision of the trip path is provided whilst the breaker is open. Any fault in the trip path will only be detected on CB closing, after a 400 ms delay.

Resistor R1 is an optional resistor that can be fitted to prevent mal-operation of the circuit breaker if the opto input is inadvertently shorted, by limiting the current to <60 mA. The resistor should not be fitted for auxiliary voltage ranges of 30/34 volts or less, as satisfactory operation can no longer be guaranteed. The table below shows the appropriate resistor value and voltage setting (**OPTO CONFIG** menu) for this scheme.

This TCS scheme will function correctly even without resistor R1, since the opto input automatically limits the supervision current to less that 10 mA. However, if the opto is accidentally shorted the circuit breaker may trip.

Auxiliary voltage (Vx)	Resistor R1 (ohms)	Opto voltage setting with R1 fitted
24/27	-	-
30/34	-	-
48/54	1.2 k	24/27
110/250	2.5 k	48/54
220/250	5.0 k	110/125

Table 7 - Resistor values for TCS scheme 1

Note	*When R1 is not fitted the opto voltage setting must be set equal to supply voltage of the supervision circuit.*

3.5.2 Scheme 1 PSL

Figure 37 shows the scheme logic diagram for the TCS scheme 1. Any of the available opto inputs can be used to indicate whether or not the trip circuit is healthy. The delay on drop off timer operates as soon as the opto is energized, but will take 400 ms to drop off/reset in the event of a trip circuit failure. The 400 ms delay prevents a false alarm due to voltage dips caused by faults in other circuits or during normal tripping operation when the opto input is shorted by a self-reset trip contact. When the timer is operated the NC (normally closed) output relay opens and the LED and user alarms are reset.

The 50 ms delay on pick-up timer prevents false LED and user alarm indications during the relay power up time, following an auxiliary supply interruption.

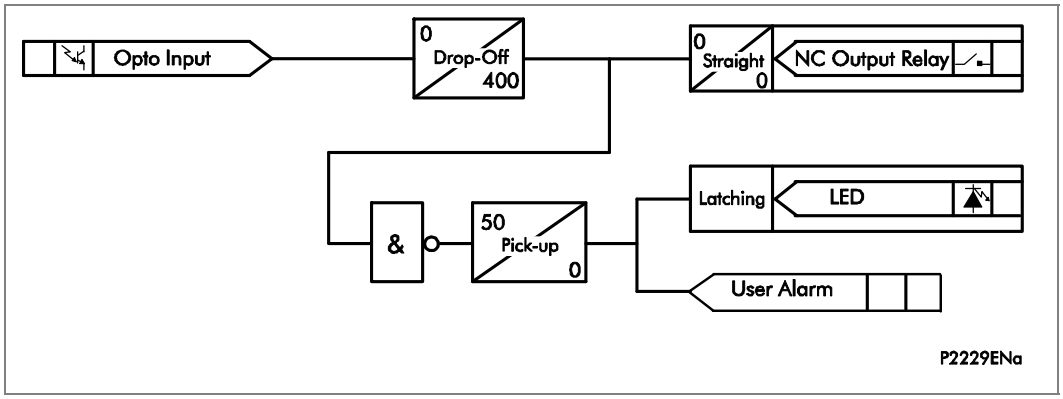

Figure 37 - PSL for TCS schemes 1 and 3

3.5.3 TCS Scheme 2

3.5.3.1 Scheme Description

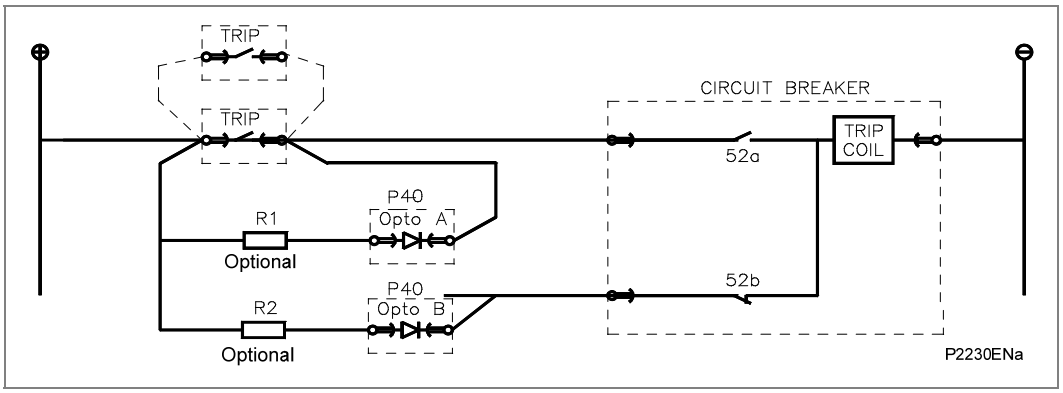

Figure 38 - TCS scheme 2

Much like scheme 1, this scheme provides supervision of the trip coil with the breaker open or closed and also does not provide pre-closing supervision. However, using two opto inputs allows the relay to correctly monitor the circuit breaker status since they are connected in series with the CB auxiliary contacts. This is achieved by assigning Opto A to the 52a contact and Opto B to the 52b contact. Provided the **Circuit Breaker Status** is set to **52a and 52b** (**CB CONTROL** column) and opto's A and B are connected to CB Aux 3ph (52a) (DDB 611) and CB Aux 3ph (52b) (DDB 612) the relay will correctly monitor the status of the breaker. This scheme is also fully compatible with latched contacts as the supervision current will be maintained through the 52b contact when the trip contact is closed.

When the breaker is closed, supervision current passes through opto input A and the trip coil. When the breaker is open current flows through opto input B and the trip coil. As with scheme 1, no supervision of the trip path is provided whilst the breaker is open. Any fault in the trip path will only be detected on CB closing, after a 400ms delay.

As with scheme 1, optional resistors R1 and R2 can be added to prevent tripping of the CB if either opto is shorted. The resistor values of R1 and R2 are equal and can be set the same as R1 in scheme 1.

3.5.4 Scheme 2 PSL

The PSL for this scheme (Figure 39) is practically the same as that of scheme 1. The main difference being that both opto inputs must be off before a trip circuit fail alarm is given.

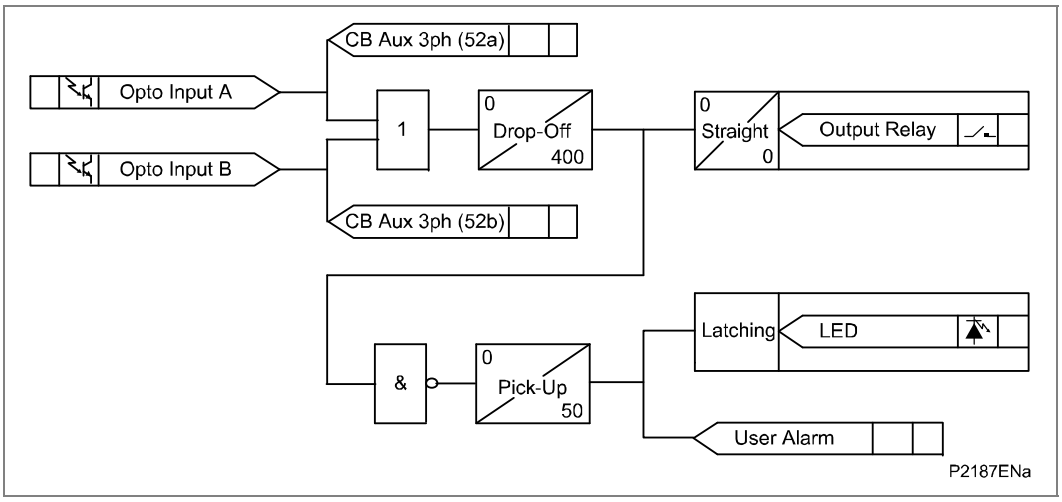

Figure 39 - PSL for TCS scheme 2

3.5.5 TCS Scheme 3

3.5.5.1 Scheme Description

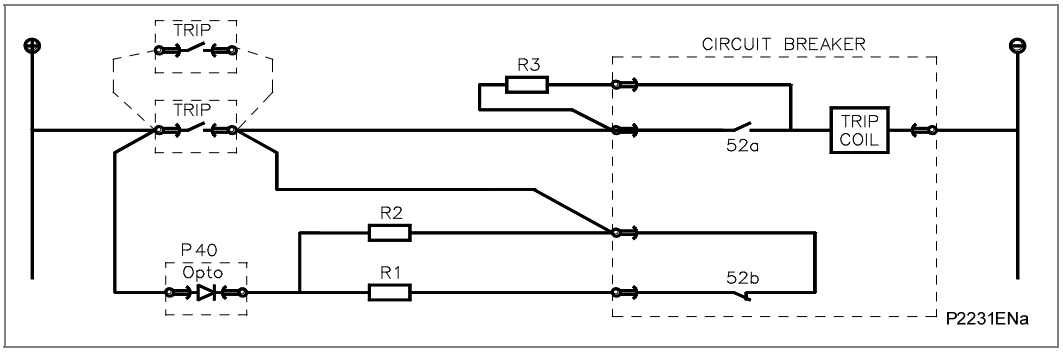

Figure 40 - TCS scheme 2

Scheme 3 is designed to provide supervision of the trip coil with the breaker open or closed, but unlike schemes 1 and 2, it also provides pre-closing supervision. Since only one opto input is used, this scheme is not compatible with latched trip contacts. If circuit breaker status monitoring is required a further 1 or 2 opto inputs must be used.

When the breaker is closed, supervision current passes through the opto input, resistor R2 and the trip coil. When the breaker is open current flows through the opto input, resistors R1 and R2 (in parallel), resistor R3 and the trip coil. Unlike schemes 1 and 2, supervision current is maintained through the trip path with the breaker in either state, thus giving pre-closing supervision.

As with schemes 1 and 2, resistors R1 and R2 are used to prevent false tripping, if the opto-input is accidentally shorted. However, unlike the other two schemes, this scheme is dependent upon the position and value of these resistors. Removing them would result in incomplete trip circuit monitoring. The table below shows the resistor values and voltage settings required for satisfactory operation.

Auxiliary voltage (Vx)	Resistor R1 & R2 (ohms)	Resistor R3 (ohms)	Opto voltage setting
24/27	-	-	-
30/34	-	-	-
48/54	1.2 k	0.6 k	24/27
110/250	2.5 k	1.2 k	48/54
220/250	5.0 k	2.5 k	110/125

Table 8 - Resistor values for TCS scheme 2

Note	*Scheme 3 is not compatible with auxiliary supply voltages of 30/34 volts and below.*

3.5.6 Scheme 3 PSL

The PSL for scheme 3 is identical to that of scheme 1 (see Figure).

3.6 VT Connections

3.6.1 Open Delta (Vee-Connected) VTs

The P341 relay can be used with vee-connected VTs by connecting the VT secondaries to C19, C20 and C21 input terminals, with the C22 input left unconnected (see the Installation chapter.

This type of VT arrangement cannot pass zero-sequence (residual) voltage to the relay, or provide any phase to neutral voltage quantities. Therefore any protection that is dependent on zero sequence voltage measurements should be disabled unless a direct measurement can be made via the measured VN input (C23 - C24). Therefore, neutral displacement protection, sensitive directional earth fault protection and CT supervision should be disabled unless the residual voltage is measured directly from the secondary of the earthing transformer or from a broken delta VT winding on a 5 limb VT.

The under and overvoltage protection can be set as phase to phase measurement with vee connected VTs. The power protection function uses phase-neutral voltage; used for detecting abnormal generator operation under a 3-phase balanced condition, therefore the 'neutral' point, although 'floating' will be approximately at the center of the three-phase voltage vectors.

The accuracy of single-phase voltage measurements can be impaired when using vee connected VT's. The relay attempts to derive the phase to neutral voltages from the phase to phase voltage vectors. If the impedance of the voltage inputs were perfectly matched the phase to neutral voltage measurements would be correct, provided the phase to phase voltage vectors were balanced. However, in practice there are small differences in the impedance of the voltage inputs, which can cause small errors in the phase to neutral voltage measurements. This may give rise to an apparent residual voltage. This problem also extends to single-phase power measurements that are also dependent upon their respective single-phase voltages.

The phase to neutral voltage measurement accuracy can be improved by connecting 3, well matched, load resistors between the phase voltage inputs (C19, C20, C21) and neutral C22, thus creating a 'virtual' neutral point. The load resistor values must be chosen so that their power consumption is within the limits of the VT. It is recommended that 10 kΩ ±1% (6 W) resistors are used for the 110 V (Vn) rated relay, assuming the VT can supply this burden.

3.6.2 VT Single Point Earthing

The P34x range will function correctly with conventional three-phase VT's earthed at any one point on the VT secondary circuit. Typical earthing examples being neutral earthing and yellow phase earthing.

4 CURRENT TRANSFORMER REQUIREMENTS

The current transformer requirements for each current input will depend on the protection function with which they are related and whether the line current transformers are being shared with other current inputs. Where current transformers are being shared by multiple current inputs, the kneepoint voltage requirements should be calculated for each input and the highest calculated value used.

The CT requirements for P341 are as shown below.

The current transformer requirements are based on a maximum prospective fault current of 50 times the relay rated current (In) and the relay having an instantaneous setting of 25 times rated current (In). The current transformer requirements are designed to provide operation of all protection elements.

Where the criteria for a specific application are in excess of those detailed above, or the actual lead resistance exceeds the limiting value quoted, the CT requirements may need to be increased according to the formulae in the following sections.

Nominal rating	Nominal output	Accuracy class	Accuracy limited factor	Limiting lead resistance
1 A	2.5 VA	10P	20	1.3 ohms
5 A	7.5 VA	10P	20	0.11 ohms

Table 9 - CT requirements

Separate requirements for Restricted Earth Fault and reverse power protection are given in section 5.6 and 5.7.

4.1 Non-Directional Definite Time/IDMT Overcurrent & Earth Fault Protection

4.1.1 Time-Delayed Phase Overcurrent Elements

$V_K \geq I_{cp}/2 * (R_{CT} + R_L + R_{rp})$

4.1.2 Time-Delayed Earth Fault Overcurrent Elements

$V_K \geq Icn/2 * (R_{CT} + 2R_L + R_{rp} + R_{rn})$

4.2 Non-Directional Instantaneous Overcurrent & Earth Fault Protection

4.2.1 CT Requirements for Instantaneous Phase Overcurrent Elements

$V_K \geq I_{sp} \times (R_{CT} + R_L + R_{rp})$

4.2.2 CT Requirements for Instantaneous Earth Fault Overcurrent Elements

$V_K \geq I_{sn} \times (R_{CT} + 2R_L + R_{rp} + R_{rn})$

4.3 Directional Definite Time/IDMT Overcurrent & Earth Fault Protection

4.3.1 Time-Delayed Phase Overcurrent Elements

$V_K \geq I_{cp}/2 * (R_{CT} + R_L + R_{rp})$

4.3.2 Time-Delayed Earth Fault Overcurrent Elements

$V_K \geq I_{cn}/2 * (R_{CT} + 2R_L + R_{rp} + R_{rn})$

4.4 Directional Instantaneous Overcurrent & Earth Fault Protection

4.4.1 CT Requirements for Instantaneous Phase Overcurrent Elements

$V_K \geq I_{fp}/2 * (R_{CT} + R_L + R_{rp})$

4.4.2 CT Requirements for Instantaneous Earth Fault Overcurrent Elements

$V_K \geq I_{fn}/2 * (R_{CT} + 2R_L + R_{rp} + R_{rn})$

4.5 Non-Directional/Directional Definite Time/IDMT Sensitive Earth Fault (SEF) Protection

4.5.1 Non-Directional Time Delayed SEF Protection (Residually Connected)

$V_K \geq I_{cn}/2 * (R_{CT} + 2R_L + R_{rp} + R_{rn})$

4.5.2 Non-Directional Instantaneous SEF Protection (Residually Connected)

$V_K \geq I_{sn} \times (R_{CT} + 2_{RL} + R_{rp} + R_{rn})$

4.5.3 Directional Time Delayed SEF Protection (Residually Connected)

$V_K \geq I_{cn}/2 \times (R_{CT} + 2R_L + R_{rp} + R_{rn})$

4.5.4 Directional Instantaneous SEF Protection (Residually Connected)

$V_K \geq I_{fn}/2 * (R_{CT} + 2R_L + R_{rp} + R_{rn})$

4.5.5 SEF Protection - as fed from a Core-Balance CT

Core balance current transformers of metering class accuracy are required and should have a limiting secondary voltage satisfying the formulae given below:

Directional/Non-Directional Time Delayed Element:

$V_K \geq I_{cn}/2 * (R_{CT} + 2R_L + R_{rn})$

Directional Instantaneous Element:

$V_K \geq I_{fn}/2 * (R_{CT} + 2R_L + R_{rn})$

Non-directional Element:

$V_K \geq I_{sn} \times (R_{CT} + 2R_L + R_{rn})$

Note	*In addition, it should be ensured that the phase error of the applied core balance current transformer is less than 90 minutes at 10% of rated current and less than 150 minutes at 1% of rated current.*

Abbreviations used in the previous formulae are explained below:

Where:

V_K = Required CT knee-point voltage (volts)

I_{fn} = Maximum prospective secondary earth fault current (amps)

I_{fp} = Maximum prospective secondary phase fault current (amps)

I_{cn} = Maximum prospective secondary earth fault current or 31 times I> setting (whichever is lower) (amps)

I_{cp} = Maximum prospective secondary phase fault current or 31 times I> setting (whichever is lower) (amps)

I_{sn} = Stage 2 & 3 earth fault setting (amps)

I_{sp} = Stage 2 and 3 setting (amps)

R_{CT} = Resistance of current transformer secondary winding (ohms)

R_L = Resistance of a single lead from relay to current transformer (ohms)

R_{rp} = Impedance of relay phase current input at 30 In (ohms)

R_{rn} = Impedance of the relay neutral current input at 30 In (ohms)

4.6 High Impedance Restricted Earth Fault Protection

The high impedance restricted earth fault element shall maintain stability for through faults and operate in less than 40 ms for internal faults provided the following equations are met:

$$R_{st} = \frac{IF\ (RCT + 2RL)}{I_S}$$

$$V_K \geq 4 * Is * Rst$$

Where:

V_K = Required CT knee-point voltage (volts)

R_{st} = Value of stabilizing resistor (ohms)

I_f = Maximum secondary through fault current level (amps)

V_K = CT knee point voltage (volts)

I_S = Current setting of REF element (amps), (IREF>Is)

R_{CT} = Resistance of current transformer secondary winding (ohms)

R_L = Resistance of a single lead from relay to current transformer (ohms)

Note	*Class x CT's should be used for high impedance restricted earth fault applications.*

4.7 Reverse and Low Forward Power Protection Functions

For both reverse and low forward power protection function settings greater than 3% Pn, the phase angle errors of suitable protection class current transformers will not result in any risk of mal-operation or failure to operate. However, for the sensitive power protection if settings less than 3% are used, it is recommended that the current input is driven by a correctly loaded metering class current transformer.

4.7.1 Protection Class Current Transformers

For less sensitive power function settings (>3%Pn), the phase current input of the P341 should be driven by a correctly loaded class 5P protection current transformer.

To correctly load the current transformer, its VA rating should match the VA burden (at rated current) of the external secondary circuit through which it is required to drive current.

4.7.2 Metering Class Current Transformers

For low Power settings (<3%Pn), the In Sensitive current input of the P341 should be driven by a correctly loaded metering class current transformer. The current transformer accuracy class will be dependent on the reverse power and low forward power sensitivity required. The table below indicates the metering class current transformer required for various power settings below 3%Pn.

To correctly load the current transformer, its VA rating should match the VA burden (at rated current) of the external secondary circuit through which it is required to drive current. Use of the P34x sensitive power phase shift compensation feature will help in this situation.

Reverse and low forward power settings %Pn	Metering CT class
0.5	0.1
0.6	
0.8	0.2
1.0	
1.2	
1.4	
1.6	0.5
1.8	
2.0	
2.2	
2.4	
2.6	
2.8	
3.0	1.0

Table 10 - Sensitive power current transformer requirements

4.8 Converting an IEC185 Current Transformer Standard Protection Classification to a Kneepoint Voltage

The suitability of an IEC standard protection class current transformer can be checked against the kneepoint voltage requirements specified previously.

If, for example, the available current transformers have a 15 VA 5P 10 designation, then an estimated kneepoint voltage can be obtained as follows:

$$V_k = \frac{VA \times ALF}{In} + ALF \times I_n \times R_{ct}$$

Where:

Vk	=	Required kneepoint voltage
VA	=	Current transformer rated burden (VA)
ALF	=	Accuracy limit factor
I_n	=	Current transformer secondary rated current (A)
R_{ct}	=	Resistance of current transformer secondary winding (Ω)

If R_{ct} is not available, then the second term in the above equation can be ignored.

Example: 400/5 A, 15 VA 5P 10, Rct = 0.2 Ω

$$V_k = \frac{15 \times 10}{5} + 10 \times 5 \times 0.2$$

$$= 40 \text{ V}$$

4.9 Converting IEC185 Current Transformer Standard Protection Classification to an ANSI/IEEE Standard Voltage Rating

The Px40 series protection is compatible with ANSI/IEEE current transformers as specified in the IEEE C57.13 standard. The applicable class for protection is class "C", which specifies a non air-gapped core. The CT design is identical to IEC class P, or British Standard class X, but the rating is specified differently.

The ANSI/IEEE “C” Class standard voltage rating required will be lower than an IEC knee point voltage. This is because the ANSI/IEEE voltage rating is defined in terms of useful output voltage at the terminals of the CT, whereas the IEC knee point voltage includes the voltage drop across the internal resistance of the CT secondary winding added to the useful output. The IEC/BS knee point is also typically 5% higher than the ANSI/IEEE knee point.

Therefore:

Vc = [Vk - Internal voltage drop] / 1.05

= [Vk - (In . RCT . ALF)] / 1.05

Where:

Vc = “C” Class standard voltage rating

Vk = IEC Knee point voltage required

I_n = CT rated current = 5A in USA

R_{CT} = CT secondary winding resistance (for 5 A CTs, the typical resistance is 0.002 ohms/secondary turn)

ALF = The CT accuracy limit factor, the rated dynamic current output of a "C" class CT (Kssc) is always 20 x In

The IEC accuracy limit factor is identical to the 20 times secondary current ANSI/IEEE rating.

Therefore:

Vc = [Vk - (100 . RCT)] / 1.05

5 AUXILIARY SUPPLY FUSE RATING

In the Safety section of this manual, the maximum allowable fuse rating of 16A is quoted. To allow time grading with fuses upstream, a lower fuselink current rating is often preferable. Use of standard ratings of between 6 A and 16 A is recommended. Low voltage fuselinks, rated at 250 V minimum and compliant with IEC60269-2 general application type gG are acceptable, with high rupturing capacity. This gives equivalent characteristics to HRC "red spot" fuses type NIT/TIA often specified historically.

The table below recommends advisory limits on relays connected per fused spur. This applies to Px40 series devices with hardware suffix C and higher, as these have inrush current limitation on switch-on, to conserve the fuse-link.

Maximum number of Px40 relays recommended per fuse				
Battery nominal voltage	**6 A**	**10 A fuse**	**15 or 16 A fuse**	**Fuse rating > 16 A**
24 to 54 V	2	4	6	Not permitted
60 to 125 V	4	8	12	Not permitted
138 to 250 V	6	10	16	Not permitted

Table 11 - Maximum number of Px40 relays recommended per fuse

Alternatively, Miniature Circuit Breakers (MCB) may be used to protect the auxiliary supply circuits.

Notes:

PROGRAMMABLE LOGIC

CHAPTER 7

Date:	February 2012
Hardware Suffix:	J (P341)
Software Version:	36 and 71 (with DLR)
Connection Diagrams:	10P341xx (xx = 01 to 12)

CONTENTS

Page (PL) 7-

FIGURES

Page (PL) 7-

TABLES

Page (PL) 7-

Notes:

1 PROGRAMMABLE SCHEME LOGIC (PSL)

1.1 Overview

The purpose of the Programmable Scheme Logic (PSL) is to allow the relay user to configure an individual protection scheme to suit their own particular application. This is achieved through the use of programmable logic gates and delay timers.

The input to the PSL is any combination of the status of opto inputs. It is also used to assign the mapping of functions to the opto inputs and output contacts, the outputs of the protection elements, e.g. protection starts and trips, and the outputs of the fixed protection scheme logic. The fixed scheme logic provides the relay's standard protection schemes. The PSL itself consists of software logic gates and timers. The logic gates can be programmed to perform a range of different logic functions and can accept any number of inputs. The timers are used either to create a programmable delay, and/or to condition the logic outputs, e.g. to create a pulse of fixed duration on the output regardless of the length of the pulse on the input. The outputs of the PSL are the LEDs on the front panel of the relay and the output contacts at the rear.

The execution of the PSL logic is event driven; the logic is processed whenever any of its inputs change, for example as a result of a change in one of the digital input signals or a trip output from a protection element. Also, only the part of the PSL logic that is affected by the particular input change that has occurred is processed. This reduces the amount of processing time that is used by the PSL; even with large, complex PSL schemes the relay trip time will not lengthen.

This system provides flexibility for the user to create their own scheme logic design. However, it also means that the PSL can be configured into a very complex system, hence setting of the PSL is implemented through the PC support package S1 Studio.

1.2 S1 Studio Px40 PSL Editor

To start the Px40 PSL editor, either click the  icon or from the Micom S1 Studio main menu, select **Tools > PSL PSL editor (Px40)**.

The PSL Editor module enables you to connect to any device front port, retrieve and edit its PSL files and send the modified file back to a Px40 device.

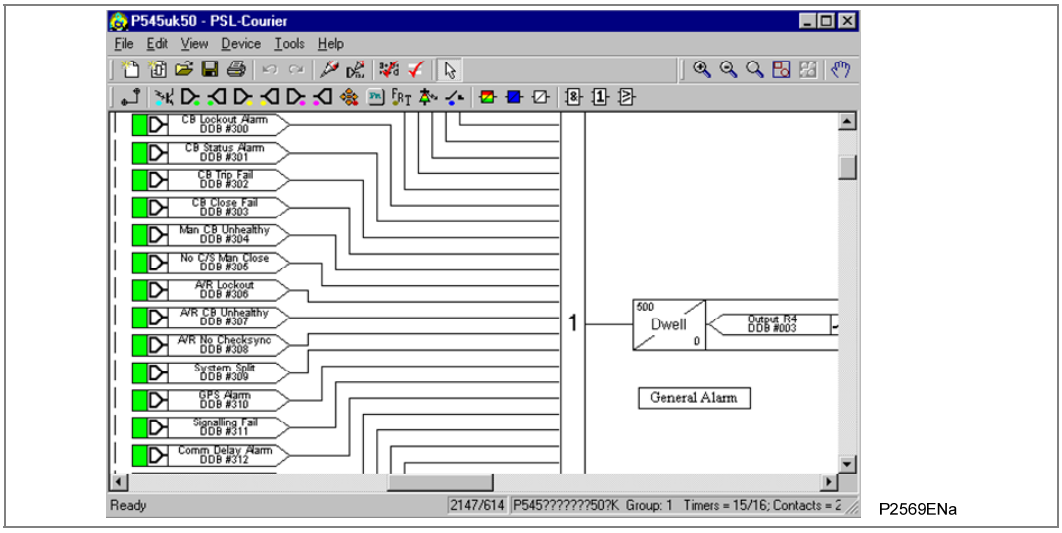

Figure 1 - PSL editor module

1.3 How to use Px40 PSL Editor

With the Px40 PSL Module you can:

- Start a new PSL diagram
- Extract a PSL file from a Px40 IED
- Open a diagram from a PSL file
- Add logic components to a PSL file
- Move components in a PSL file
- Edit link of a PSL file
- Add link to a PSL file
- Highlight path in a PSL file
- Use a conditioner output to control logic
- Download PSL file to a Px40 IED
- Print PSL files

For a detailed discussion on how to use these functions, please refer to S1 Studio Users Manual.

1.4 Warnings

Checks are done before the scheme is sent to the relay. Various warning messages may be displayed as a result of these checks.

The Editor first reads in the model number of the connected relay, then compares it with the stored model number. A "wildcard" comparison is used. If a model mismatch occurs, a warning is generated before sending starts. Both the stored model number and that read-in from the relay are displayed along with the warning. However, the user must decide if the settings to be sent are compatible with the relay that is connected. Ignoring the warning could lead to undesired behavior in the relay.

If there are any potential problems of an obvious nature, a list is generated. The types of potential problems that the program attempts to detect are:

- One or more gates, LED signals, contact signals, and/or timers have their outputs linked directly back to their inputs. An erroneous link of this sort could lock up the relay, or cause other more subtle problems to arise.
- Inputs To Trigger (ITT) exceeds the number of inputs. A programmable gate has its ITT value set to greater than the number of actual inputs; the gate can never activate.

Note	*There is no lower ITT value check. A 0-value does not generate a warning.*

- Too many gates. There is a theoretical upper limit of 256 gates in a scheme, but the practical limit is determined by the complexity of the logic. In practice the scheme would have to be very complex, and this error is unlikely to occur.
- Too many links. There is no fixed upper limit to the number of links in a scheme. However, as with the maximum number of gates, the practical limit is determined by the complexity of the logic. In practice the scheme would have to be very complex, and this error is unlikely to occur.

1.5 Toolbar and Commands

There are a number of toolbars available for easy navigation and editing of PSL.

1.5.1 Standard Tools

For file management and printing.

1.5.2 Alignment Tools

To align logic elements horizontally or vertically into groups.

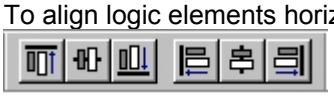

1.5.3 Drawing Tools

To add text comments and other annotations, for easier reading of PSL schemes.

1.5.4 Nudge Tools

To move logic elements.

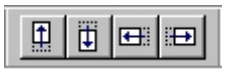

1.5.5 Rotation Tools

To spin, mirror and flip.

1.5.6 Structure Tools

To change the stacking order of logic components.

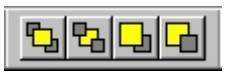

1.5.7 Zoom and Pan Tools

For scaling the displayed screen size, viewing the entire PSL, or zooming to a selection.

1.5.8 P341 Logic Symbols

This toolbar provides icons to place each type of logic element into the scheme diagram. Not all elements are available in all devices. Icons will only be displayed for those elements available in the selected device.

Link
Create a link between two logic symbols.

Opto Signal
Create an opto signal.

Input Signal
Create an input signal.

Output Signal
Create an output signal.

GOOSE In
Create an input signal to logic to receive an IEC 61850 GOOSE message transmitted from another IED.

GOOSE Out
Create an output signal from logic to transmit an IEC 61850 GOOSE message to another IED.

Control In
Create an input signal to logic that can be operated from an external command.

Function Key
Create a function key input signal.

Trigger Signal
Create a fault record trigger.

LED Signal
Create an LED input signal that repeats the status of tri-color LED.

LED Signal
Create an LED input signal that repeats the status of red LED.

Contact Signal
Create a contact signal.

LED Conditioner
Create an LED conditioner.

Contact Conditioner
Create a contact conditioner.

Timer
Create a timer.

AND Gate
Create an AND Gate.

OR Gate
Create an OR Gate.

Programmable Gate
Create a programmable gate.

1.6 PSL Logic Signals Properties

1.6.1 Signal Properties Menu

The logic signal toolbar is used for the selection of logic signals. To use this:

Use the logic toolbar to select logic signals.
This is enabled by default but to hide or show it, select **View** > **Logic Toolbar**.

Zoom in or out of a logic diagram using the toolbar icon or select **View** > **Zoom Percent**.

Right-click any logic signal and a context-sensitive menu appears.

Certain logic elements show the **Properties…** option. Select this and a **Component Properties** window appears. The Component Properties window and the signals listed vary depending on the logic symbol selected.

The following subsections describe each of the available logic symbols.

1.6.2 Link Properties

Links form the logical link between the output of a signal, gate or condition and the input to any element.

Any link that is connected to the input of a gate can be inverted. Right-click the input and select **Properties…**. The **Link Properties** window appears.

Figure 2 - Link properties

1.6.3 Rules for Linking Symbols

An inverted link is shown with a small circle on the input to a gate. A link must be connected to the input of a gate to be inverted.

Links can only be started from the output of a signal, gate, or conditioner, and can only be ended on an input to any element.

Signals can only be an input or an output. To follow the convention for gates and conditioners, input signals are connected from the left and output signals to the right. The Editor will automatically enforce this convention.

A link is refused for the following reasons:

- An attempt to connect to a signal that is already driven. The cause of the refusal may not be obvious, since the signal symbol may appear elsewhere in the diagram.
  Right-click the link and select Highlight to find the other signal. Click anywhere on the diagram to disable the highlight.
- An attempt is made to repeat a link between two symbols. The reason for the refusal may not be obvious, because the existing link may be represented elsewhere in the diagram.

1.6.4 Opto Signal Properties

Each opto input can be selected and used for programming in PSL. Activation of the opto input drives an associated DDB signal.

For example activating opto input L1 will assert DDB 032 in the PSL.

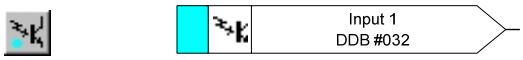

1.6.5 Input Signal Properties

Relay logic functions provide logic output signals that can be used for programming in PSL. Depending on the relay functionality, operation of an active relay function will drive an associated DDB signal in PSL.

For example, DDB 768 will be asserted in the PSL should the active earth fault 1, stage 1 protection operate/trip.

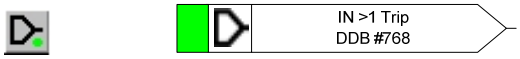

1.6.6 Output Signal Properties

Relay logic functions provide logic input signals that can be used for programming in PSL. Depending on the relay functionality, activation of the output signal will drive an associated DDB signal in PSL and cause an associated response to the relay function.

For example, if DDB 548 is asserted in the PSL, it will block the sensitive earth function stage 1 timer.

1.6.7 GOOSE Input Signal Properties

The PSL interfaces with the GOOSE Scheme Logic using 32 virtual inputs. The Virtual Inputs can be used in much the same way as the Opto Input signals.

The logic that drives each of the Virtual Inputs is contained within the relay's GOOSE Scheme Logic file. It is possible to map any number of bit-pairs, from any enrolled device, using logic gates onto a Virtual Input (see MiCOM S1 Studio Users Manual for more details).

For example, DDB 1408 will be asserted in PSL should virtual input 1 and its associated bit pair operate.

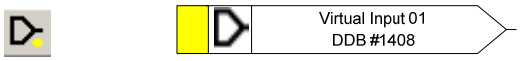

1.6.8 GOOSE Output Signal Properties

The PSL interfaces with the GOOSE Scheme Logic using of 32 virtual outputs. Virtual outputs can be mapped to bit-pairs for transmitting to any enrolled devices.

It is possible to map virtual outputs to bit-pairs for transmitting to any subscribed devices (see S1 Users manual for more details).

For example if DDB 1696 is asserted in PSL, Virtual Output 32 and its associated mappings will operate.

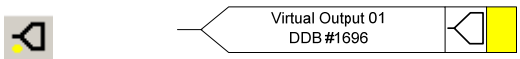

1.6.9 Control Input Signal Properties

There are 32 control inputs which can be activated via the relay menu, 'hotkeys' or via rear communications. Depending on the programmed setting i.e. latched or pulsed, an associated DDB signal will be activated in PSL when a control input is operated.

For example operate control input 1 to assert DDB 1376 in the PSL.

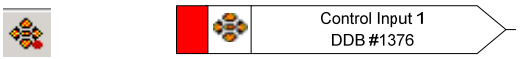

1.6.10 Function Key Properties (P343/4/5/6 only)

Each function key can be selected and used for programming in PSL. Activation of the function key will drive an associated DDB signal and the DDB signal will remain active depending on the programmed setting i.e. toggled or normal. Toggled mode means the DDB signal will remain latched or unlatched on key press and normal means the DDB will only be active for the duration of the key press.

For example operate function key 1 to assert DDB 256 in the PSL.

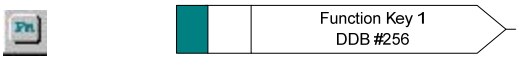

1.6.11 Fault Recorder Trigger Properties

The fault recording facility can be activated, by driving the fault recorder trigger DDB signal. For example assert DDB 623 to activate the fault recording in the PSL.

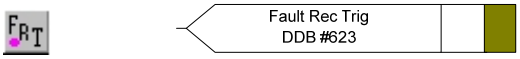

1.6.12 LED Signal Properties

All programmable LEDs will drive associated DDB signal when the LED is activated. For example DDB 230 for red LED 7.

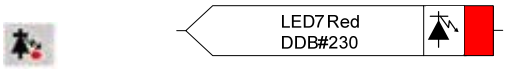

1.6.13 Contact Signal Properties

All relay output contacts will drive associated DDB signal when the output contact is activated. For example DDB 009 will be asserted when output R10 is activated.

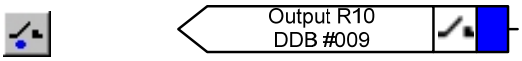

1.6.14 LED Conditioner Properties

1. Select the LED name from the list (only shown when inserting a new symbol).
2. Configure the red LED output to be latching or non-latching

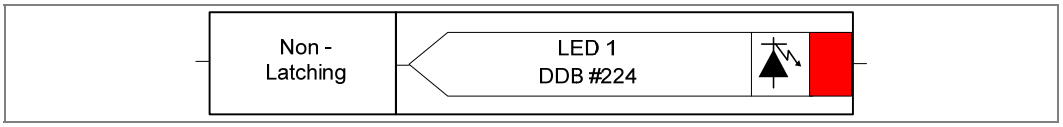

Figure 3 - LED conditioner properties

1.6.15 Contact Conditioner Properties

Each contact can be conditioned with an associated timer that can be selected for pick up, drop off, dwell, pulse, pick-up/drop-off, straight-through, or latching operation.

Straight-through means it is not conditioned in any way whereas **Latching** is used to create a sealed-in or lockout type function.

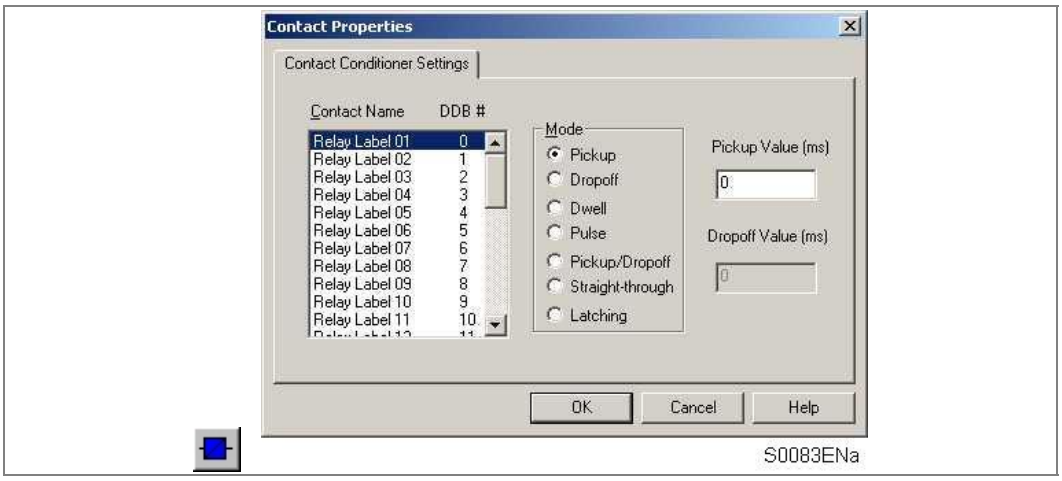

Figure 4 - Contact properties

1. Select the contact name from the Contact Name list (only shown when inserting a new symbol).
2. Choose the conditioner type required in the Mode tick list.
3. Set the Pick-up Time (in milliseconds), if required.
4. Set the Drop-off Time (in milliseconds), if required.

1.6.16 Timer Properties

Each timer can be selected for pick up, drop off, dwell, pulse or pick-up/drop-off operation.

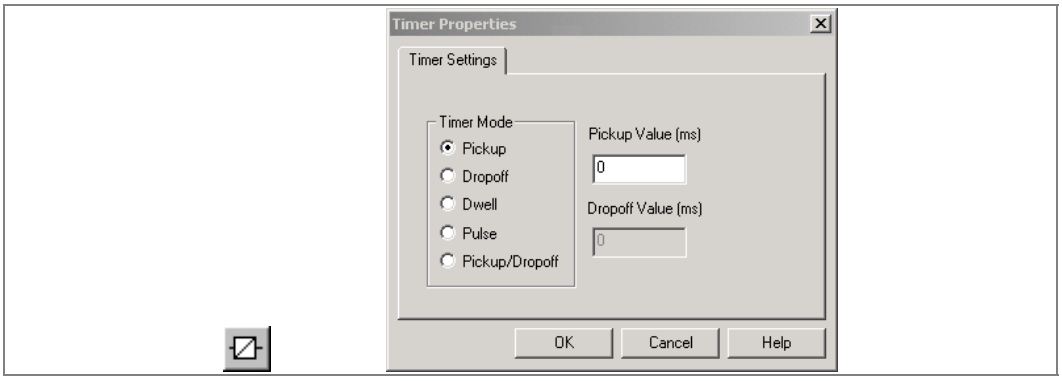

Figure 5 - Timer properties

5. Choose the operation mode from the **Timer Mode** tick list.
6. Set the Pick-up Time (in milliseconds), if required.
7. Set the Drop-off Time (in milliseconds), if required.

1.6.17 Gate Properties

A Gate may be an AND, OR, or programmable gate.

An **AND** gate requires that all inputs are TRUE for the output to be TRUE.

An **OR** gate requires that one or more input is TRUE for the output to be TRUE.

A **Programmable** gate requires that the number of inputs that are TRUE is equal to or greater than its 'Inputs to Trigger' setting for the output to be TRUE.

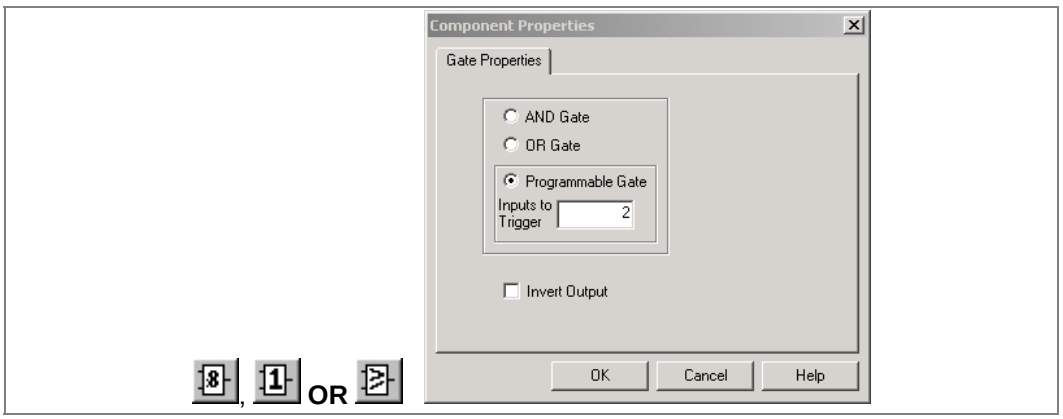

Figure 6 - Gate properties

1. Select the Gate type AND, OR, or Programmable.
2. Set the number of inputs to trigger when **Programmable Gate** is selected.
3. Select if the output of the gate should be inverted using the Invert Output check box. An inverted output is indicated with a "bubble" on the gate output.

2 DESCRIPTION OF LOGIC NODES

DDB no.	English text	Source	Description
0	Output R1 (Output Label Setting)	Relay conditioner	Output Relay 1 is on
23	Output R24 (Output Label Setting)	Relay conditioner	Output Relay 24 is on
24 to 31	Not Used		
32	Input L1 (Input Label Setting)	Opto Isolator Input	Opto Input 1 is on
55	Input L24 (Input Label Setting)	Opto Isolator Input	Opto Input 24 is on
56 to 63	Not Used		
64	Relay Cond 1	PSL	Input signal driving Relay 1 is on
87	Relay Cond 24	PSL	Input signal driving Relay 24 is on
88 to 223	Not Used		
224	LED1	LED conditioner	Programmable LED 1 is on
231	LED8	LED conditioner	Programmable LED 8 is on
232	LED Cond IN 1	PSL	Input signal driving LED 1 is on
239	LED Cond IN 8	PSL	Input signal driving LED 8 is on
240 to 287	Not Used		
288	Timer out 1	Auxiliary Timer out	Output from Auxiliary Timer 1 is on
303	Timer out 16	Auxiliary Timer out	Output from Auxiliary Timer 16 is on
304 to 319	Not Used		
320	Timer in 1	PSL	Input to Auxiliary Timer 1 is on
335	Timer in 16	PSL	Input to Auxiliary Timer 16 is on
336 to 352	Not Used		
353	F out of Range	Frequency Tracking	Frequency out of range. Frequency tracking range is 40-70 Hz.
354	SG-DDB Invalid	Group Selection	Setting Group Selection DDB inputs have detected an invalid (disabled) settings group
355	Prot'n Disabled	Commissioning Test	Protection Disabled - typically out of service due to test mode
356	VT Fail Alarm	VT Supervision	VTS Indication alarm - failed VT (fuse blow) detected by VT supervision
357	CT-1 Fail Alarm	CT Supervision	CTS Indication Alarm for IA/IB/IC (CT supervision alarm).
358	CB Fail Alarm	Breaker Fail	Circuit Breaker Fail Alarm
359	I ^ Maint Alarm	CB Monitoring	Circuit Breaker cumulative broken current has exceeded the Maintenance Alarm setting
360	I ^ Lockout Alarm	CB Monitoring	Circuit Breaker cumulative broken current has exceeded the Maintenance Lockout setting
361	CB Ops Maint.	CB Monitoring	Number of Circuit Breaker trips has exceeded Maintenance Alarm setting
362	CB Ops Lockout	CB Monitoring	Number of Circuit Breaker trips has exceeded the Maintenance Lockout setting
363	CB Op Time Maint.	CB Monitoring	Circuit Breaker operating time has exceeded Maintenance Alarm setting (slow interruption time)
364	CB Op Time Lock	CB Monitoring	Circuit Breaker operating time has exceeded the Lockout Alarm setting (too slow interruption)
365	Fault Freq. Lock	CB Monitoring	Excessive Fault Frequency Lockout Alarm (too many trips in a set time)

DDB no.	English text	Source	Description
366	CB Status Alarm	CB Status	Indication of a fault with the Circuit Breaker state monitoring - example defective auxiliary contacts
367	Man CB Trip Fail	CB Control	Circuit Breaker failed to trip (after a manual/operator trip command)
368	Man CB Cls. Fail	CB Control	Circuit Breaker failed to close (after a manual/operator close command)
369	Man CB Unhealthy	CB Control	Manual Circuit Breaker Unhealthy output signal indicating that the circuit breaker has not closed successfully after a manual close command. (A successful close requires the Circuit Breaker Healthy signal to appear within the "healthy window" time)
370	Not Used		
371	Gen Thermal Alarm	Thermal Alarm	Thermal Alarm
372 to 378	Not Used		
379	Freq Prot Alarm	PSL	F<1 Trip OR F<2 Trip OR F<3 Trip OR F>1 Trip (These DDB signals are mapped to Freq Prot Alarm in default PSL)
380	Voltage Prot Alarm	PSL	V<1 Trip OR V>1 Trip (These DDB signals are mapped to Voltage Prot Alarm in default PSL)
381 to 383	Not Used		
384	CL Card I/P Fail	Current Loop Inputs	Current Loop Input (transducer input) failure
385	CL Card O/P Fail	Current Loop Outputs	Current Loop Output (transducer output) failure
386	CL Input 1 Alarm	Current Loop Inputs	Current Loop Input (transducer input) 1 alarm
387	CL Input 2 Alarm	Current Loop Inputs	Current Loop Input (transducer input) 2 alarm
388	CL Input 3 Alarm	Current Loop Inputs	Current Loop Input (transducer input) 3 alarm
389	CL Input 4 Alarm	Current Loop Inputs	Current Loop Input (transducer input) 4 alarm
390	CLI1 I< Fail Alm	Current Loop Inputs	Current Loop Input (transducer input) 1 undercurrent alarm (current is <4 mA for 4-20 mA input)
391	CLI2 I< Fail Alm	Current Loop Inputs	Current Loop Input (transducer input) 2 undercurrent alarm (current is <4 mA for 4-20 mA input)
392	CLI3 I< Fail Alm	Current Loop Inputs	Current Loop Input (transducer input) 3 undercurrent alarm (current is <4 mA for 4-20 mA input)
393	CLI4 I< Fail Alm	Current Loop Inputs	Current Loop Input (transducer input) 4 undercurrent alarm (current is <4 mA for 4-20 mA input)
394 to 395	Not Used		
396	Amb T Fail Alm	SW (P341 7x)	Ambient Temperature Current Loop Input (transducer input) undercurrent alarm (current is <4 mA for 4-20 mA input)
397	Wind V Fail Alm	SW (P341 7x)	Wind Velocity Current Loop Input (transducer input) undercurrent alarm (current is <4 mA for 4-20 mA input)
398	Wind D Fail Alm	SW (P341 7x)	Winf Direction Current Loop Input (transducer input) undercurrent alarm (current is <4 mA for 4-20 mA input)
399	Solar R Fail Alm	SW (P341 7x)	Solar Radiation Current Loop Input (transducer input) undercurrent alarm (current is <4 mA for 4-20 mA input)
400 to 402	Not Used		

DDB no.	English text	Source	Description
403	Man No Checksync	CB Control	Indicates that the check synchronism signal has failed to appear for a manual close
404	System Split	sys check	System split alarm - will be raised if the system is split (remains permanently out of synchronism) for the duration of the system split timer
405	MR User Alarm 11	PSL	User Alarm 11 (manual-resetting)
411	MR User Alarm 5	PSL	User Alarm 5 (manual-resetting)
412	SR User Alarm 4	PSL	User Alarm 4 (self-resetting)
415	SR User Alarm 1	PSL	User Alarm 1 (self-resetting)
416	Battery Fail	Self monitoring	Front panel miniature battery failure - either battery removed from slot, or low voltage.
417	Field Volts Fail	Self monitoring	48 V Field Voltage Failure
418	Rear Comms 2 Fail	InterMiCOM	2nd Rear Comms Port Failure
419	GOOSE IED Absent	UCA2	The IED is not subscribed to a publishing IED in the current scheme.
420	NIC Not Fitted	UCA2	Ethernet board not fitted
421	NIC No Response	UCA2	Ethernet board not responding
422	NIC Fatal Error	UCA2	Ethernet board unrecoverable error
423	NIC Soft Reload	UCA2	Ethernet board software reload alarm
424	Bad TCP/IP Cfg	UCA2	Bad TCP/IP configuration alarm
425	Bad OSI Config	UCA2	Bad OSI configuration alarm
426	NIC Link Fail	UCA2	Ethernet link lost
427	NIC SW Mis-Match	UCA2	Ethernet board software not compatible with main CPU
428	IP Addr Conflict	UCA2	The IP address of the IED is already used by another IED
429 to 543	Not Used		
544	IN>1 Timer Block	PSL	Block Earth Fault Stage 1 Time delayed trip
545	IN>2 Timer Block	PSL	Block Earth Fault Stage 2 Time delayed trip
546	IN>3 Timer Block	PSL	Block Earth Fault Stage 3 Time delayed trip
547	IN>4 Timer Block	PSL	Block Earth Fault Stage 4 Time delayed trip
548	ISEF>1 Timer Blk	PSL	Block Sensitive Earth Fault Stage 1 Time delayed trip
549	ISEF>2 Timer Blk	PSL	Block Sensitive Earth Fault Stage 2 Time delayed trip
550	ISEF>3 Timer Blk	PSL	Block Sensitive Earth Fault Stage 3 Time delayed trip
551	ISEF>4 Timer Blk	PSL	Block Sensitive Earth Fault Stage 4 Time delayed trip
552to 575	Not Used		
576	I>1 Timer Block	PSL	Block Phase Overcurrent Stage 1 Time delayed trip

DDB no.	English text	Source	Description
577	I>2 Timer Block	PSL	Block Phase Overcurrent Stage 2 Time delayed trip
578	I>3 Timer Block	PSL	Block Phase Overcurrent Stage 3 Time delayed trip
579	I>4 Timer Block	PSL	Block Phase Overcurrent Stage 4 Time delayed trip
580 to 581	Not Used		
582	I2> Inhibit	PSL	Inhibit all Negative Sequence Overcurrent stages
583	I2>1 Timer Block	PSL	Block Negative Sequence Overcurrent Stage 1 Time delayed trip
584	I2>2 Timer Block	PSL	Block Negative Sequence Overcurrent Stage 2 Time delayed trip
585	I2>3 Timer Block.	PSL	Block Negative Sequence Overcurrent Stage 3 Time delayed trip
586	I2>4 Timer Block	PSL	Block Negative Sequence Overcurrent Stage 4 Time delayed trip
587 to 591	Not Used		
592	VN>1 Timer Block	PSL	Block Residual Overvoltage Stage 1 Time delayed trip
593	VN>2 Timer Block	PSL	Block Residual Overvoltage Stage 2 Time delayed trip
594	VN>3 Timer Block	PSL	Block Residual Overvoltage Stage 3 Time delayed trip
595	VN>4 Timer Block	PSL	Block Residual Overvoltage Stage 4 Time delayed trip
596 to 597	Not Used		
598	V>1 Timer Block	PSL	Block Phase Overvoltage Stage 1 Time delayed trip
599	V>2 Timer Block	PSL	Block Phase Overvoltage Stage 2 Time delayed trip
600	V2> Accelerate	PSL	Input to Accelerate Negative Sequence Overvoltage - (V2> Protection) instantaneous operating time
601	V<1 Timer Block	PSL	Block Phase Undervoltage Stage 1 Time delayed trip
602	V<2 Timer Block	PSL	Block Phase Undervoltage Stage 2 Time delayed trip
603 to 625	Not Used		
626	F<1 Timer Block	PSL	Block Underfrequency Stage 1 Time delayed trip
627	F<2 Timer Block	PSL	Block Underfrequency Stage 2 Time delayed trip
628	F<3 Timer Block	PSL	Block Underfrequency Stage 3 Time delayed trip
629	F<4 Timer Block	PSL	Block Underfrequency Stage 4 Time delayed trip
630	F>1 Timer Block	PSL	Block Overfrequency Stage 1 Time delayed trip
631	F>2 Timer Block	PSL	Block Overfrequency Stage 2 Time delayed trip
632	Not Used		
633	df/dt> Inhibit	PSL	Inhibit df/dt Protection
634	df/dt>1 Tmr Blk	PSL	Block df/dt Stage 1 Timer
635	df/dt>2 Tmr Blk	PSL	Block df/dt Stage 2 Timer
636	df/dt>3 Tmr Blk	PSL	Block df/dt Stage 3 Timer
637	df/dt>4 Tmr Blk	PSL	Block df/dt Stage 4 Timer
638 to 640	Not used		
641	Reset GenThermal	PSL	Reset Thermal Overload State
642	DLR I>1 Inhibit	PSL (P341 7x)	Inhibit DLR Stage 1
643	DLR I>2 Inhibit	PSL (P341 7x)	Inhibit DLR Stage 2

DDB no.	English text	Source	Description
644	DLR I>3 Inhibit	PSL (P341 7x)	Inhibit DLR Stage 3
645	DLR I>4 Inhibit	PSL (P341 7x)	Inhibit DLR Stage 4
646	DLR I>5 Inhibit	PSL (P341 7x)	Inhibit DLR Stage 5
647	DLR I>6 Inhibit	PSL (P341 7x)	Inhibit DLR Stage 6
648	DLR Scheme Inh	PSL (P341 7x)	Inhibit DLR all stages
649 to 655	Not Used		
656	CL1 Input 1 Blk	PSL	Block Current Loop Input (transducer input) 1
657	CL1 Input 2 Blk	PSL	Block Current Loop Input (transducer input) 2
658	CL1 Input 3 Blk	PSL	Block Current Loop Input (transducer input) 3
659	CL1 Input 4 Blk	PSL	Block Current Loop Input (transducer input) 4
660 to 671	Not Used		
672	Fault REC TRIG	PSL	Trigger for Fault Recorder
673	Not used		
674	Any Trip	PSL	Any Trip – All trip signals that are required to operate the Trip LED, initiate the breaker fail protection and initiate the CB monitoring counters are mapped to this signal in the PSL.
675	SG Select x1	PSL	Setting Group Selector X1 (low bit) - selects SG2 if only DDB 624 signal is on. SG1 is active if both DDB 624 & DDB 625 = 0 SG4 is active if both DDB 624 & DDB 625 = 1
676	SG Select 1x	PSL	Setting Group Selector 1X (high bit) - selects SG3 if only DDB 625 is active. SG1 is active if both DDB 624 & DDB 625 = 0 SG4 is active if both DDB 624 & DDB 625 = 1
677	Test Mode	PSL	Commissioning Tests - automatically places relay in Test Mode which takes the relay out of service and allows secondary injection testing of the relay. For IEC60870-5-103 protocol spontaneous events and cyclic measured data transmitted whilst the relay is in test mode will have a COT of ‘test mode’
678	Init Trip CB	PSL	Initiate tripping of circuit breaker from a manual command
679	Init Close CB	PSL	Initiate closing of circuit breaker from a manual command
680	Ext. Trip 3ph	PSL	External Trip 3 phase - allows external protection to initiate breaker fail and circuit breaker condition monitoring counters.
681	CB Aux 3ph(52-A)	PSL	52-A (CB closed) CB Auxiliary Input (3 phase)
682	CB Aux 3ph(52-B)	PSL	52-B (CB open) CB Auxiliary Input (3 phase)
683	CB Healthy	PSL	Circuit Breaker Healthy (input to manual close that the CB has enough energy to allow closing)
684	MCB/VTS	PSL	VT supervision input - signal from external Miniature Circuit Breaker showing MCB tripped
685	Monitor Blocked	PSL	For IEC-870-5-103 protocol only, used for "Monitor Blocking" (relay is quiet - issues no messages via SCADA port)
686	Command Blocked	PSL	For IEC-870-5-103 protocol only, used for "Command Blocking" (relay ignores SCADA commands)
687	Time Synch	PSL	Time Synchronism by Opto Input pulse
688	Reset Close Dly.	PSL	Reset Manual Circuit Breaker Close Time Delay

DDB no.	English text	Source	Description
689	Reset Relays/LED	PSL	Reset Latched Relays & LEDs (manual reset of any latched trip contacts and LEDs)
690	Reset Lockout	PSL	Reset CB monitoring lockouts
691	Reset All Values	PSL	Reset Circuit Breaker Condition Monitoring Values
692	RP1 Read Only	PSL	Rear Port 1 Remote Read only
693	RP2 Read Only	PSL	Rear Port 2 Remote Read only
694	NIC Read Only	PSL	Ethernet Rear Port Remote Read only
695	103 MonitorBlock	PSL	IEC 60870-5-103 Monitor Block
696	103 CommandBlock	PSL	IEC 60870-5-103 Command Block
697 to 767	Not used		
768	IN>1 Trip	Earth Fault	1st Stage Earth Fault Trip
769	IN>2 Trip	Earth Fault	2nd Stage Earth Fault Trip
770	IN>3 Trip	Earth Fault	3rd Stage Earth Fault Trip
771	IN>4 Trip	Earth Fault	4th Stage Earth Fault Trip
772	IREF> Trip	Restricted Earth Fault	Restricted Earth Fault Trip
773	ISEF>1 Trip	Sensitive Earth Fault	1st Stage Sensitive Earth Fault Trip
774	ISEF>2 Trip	Sensitive Earth Fault	2nd Stage Sensitive Earth Fault Trip
775	ISEF>3 Trip	Sensitive Earth Fault	3rd Stage Sensitive Earth Fault Trip
776	ISEF>4 Trip	Sensitive Earth Fault	4th Stage Sensitive Earth Fault Trip
777 to 799	Not used		
800	I>1 Trip	Phase Overcurrent	1st Stage Overcurrent Trip 3ph
801	I>1 Trip A	Phase Overcurrent	1st Stage Overcurrent Trip A
802	I>1 Trip B	Phase Overcurrent	1st Stage Overcurrent Trip B
803	I>1 Trip C	Phase Overcurrent	1st Stage Overcurrent Trip C
804	I>2 Trip	Phase Overcurrent	2nd Stage Overcurrent Trip 3ph
805	I>2 Trip A	Phase Overcurrent	2nd Stage Overcurrent Trip A
806	I>2 Trip B	Phase Overcurrent	2nd Stage Overcurrent Trip B
807	I>2 Trip C	Phase Overcurrent	2nd Stage Overcurrent Trip C
808	I>3 Trip	Phase Overcurrent	3rd Stage Overcurrent Trip 3ph
809	I>3 Trip A	Phase Overcurrent	3rd Stage Overcurrent Trip A
810	I>3 Trip B	Phase Overcurrent	3rd Stage Overcurrent Trip B
811	I>3 Trip C	Phase Overcurrent	3rd Stage Overcurrent Trip C
812	I>4 Trip	Phase Overcurrent	4th Stage Overcurrent Trip 3ph
813	I>4 Trip A	Phase Overcurrent	4th Stage Overcurrent Trip A
814	I>4 Trip B	Phase Overcurrent	4th Stage Overcurrent Trip B
815	I>4 Trip C	Phase Overcurrent	4th Stage Overcurrent Trip C
816 to 823	Not used		
824	I2>1 Trip	NPS Overcurrent	1st Stage Negative Phase Sequence Overcurrent Trip
825	I2>2 Trip	NPS Overcurrent	1st Stage Negative Phase Sequence Overcurrent Trip
826	I2>3 Trip	NPS Overcurrent	1st Stage Negative Phase Sequence Overcurrent Trip
827	I2>4 Trip	NPS Overcurrent	1st Stage Negative Phase Sequence Overcurrent Trip
828	Bfail1 Trip 3ph	Breaker Failure	1st Stage Breaker Fail Trip
829	Bfail2 Trip 3ph	Breaker Failure	2nd Stage Breaker Fail Trip

DDB no.	English text	Source	Description
830 to 831	Not used		
832	VN>1 Trip	Residual O/V NVD	1st Stage Residual Overvoltage Trip (Derived O/V)
833	VN>2 Trip	Residual O/V NVD	2nd Stage Residual Overvoltage Trip (Derived O/V)
834	VN>3 Trip	Residual O/V NVD	1st Stage Residual Overvoltage Trip (VN Measured O/V)
835	VN>4 Trip	Residual O/V NVD	2nd Stage Residual Overvoltage Trip (VN Measured O/V)
836	Not used		
837	Not used		
838	V>1 Trip	Phase Overvoltage	1st Stage Phase Overvoltage Trip 3ph
839	V>1 Trip A/AB	Phase Overvoltage	1st Stage Phase Overvoltage Trip A/AB
840	V>1 Trip B/BC	Phase Overvoltage	1st Stage Phase Overvoltage Trip B/BC
841	V>1 Trip C/CA	Phase Overvoltage	1st Stage Phase Overvoltage Trip C/CA
842	V>2 Trip	Phase Overvoltage	2nd Stage Phase Overvoltage Trip 3ph
843	V>2 Trip A/AB	Phase Overvoltage	2nd Stage Phase Overvoltage Trip A/AB
844	V>2 Trip B/BC	Phase Overvoltage	2nd Stage Phase Overvoltage Trip B/BC
845	V>2 Trip C/CA	Phase Overvoltage	2nd Stage Phase Overvoltage Trip C/CA
846	V2>1 Trip	NPS Overvoltage	Negative Phase Sequence Overvoltage Trip
847	V<1 Trip	Phase Undervoltage	1st Stage Phase Undervoltage Trip 3ph
848	V<1 Trip A/AB	Phase Undervoltage	1st Stage Phase Undervoltage Trip A/AB
849	V<1 Trip B/BC	Phase Undervoltage	1st Stage Phase Undervoltage Trip B/BC
850	V<1 Trip C/CA	Phase Undervoltage	1st Stage Phase Undervoltage Trip C/CA
851	V<2 Trip	Phase Undervoltage	2nd Stage Phase Undervoltage Trip 3ph
852	V<2 Trip A/AB	Phase Undervoltage	2nd Stage Phase Undervoltage Trip A/AB
853	V<2 Trip B/BC	Phase Undervoltage	2nd Stage Phase Undervoltage Trip B/BC
854	V<2 Trip C/CA	Phase Undervoltage	2nd Stage Phase Undervoltage Trip C/CA
855 to 881	Not used		
882	Power 1 Trip	Power	1st Stage Power Trip
883	Power 2 Trip	Power	2nd Stage Power Trip
884	SPower 1 Trip	Sensitive Power	1st Stage Sensitive Power Trip
885	SPower 2 Trip	Sensitive Power	2nd Stage Sensitive Power Trip
886 to 915	Not used		
916	F<1 Trip	Underfrequency	1st Stage Underfrequency Trip
917	F<2 Trip	Underfrequency	2nd Stage Underfrequency Trip
918	F<3 Trip	Underfrequency	3rd Underfrequency Trip
919	F<4 Trip	Underfrequency	4th Stage Underfrequency Trip
920	F>1 Trip	Overfrequency	1st Stage Overfrequency Trip
921	F>2 Trip	Overfrequency	2nd Stage Overfrequency Trip
922 to 927	Not used		
928	df/dt>1 Trip	df/dt	1st Stage Rate of Change of Frequency Trip
929	df/dt>2 Trip	df/dt	2nd Stage Rate of Change of Frequency Trip
930	df/dt>3 Trip	df/dt	3rd Stage Rate of Change of Frequency Trip
931	df/dt>4 Trip	df/dt	4th Stage Rate of Change of Frequency Trip
932	Not used		
933	V Shift Trip	Voltage Vector Shift	Voltage Vector Shift Trip
934	Not used		

DDB no.	English text	Source	Description
935	Not used		
936	df/dt>1 Under F	df/dt	Rate of Change of Frequency Stage 1 Underfrequency
937	df/dt>1 Over F	df/dt	Rate of Change of Frequency Stage 1 Overfrequency
938 to 944	Not used		
945	Gen Thermal Trip	Thermal Overload	Thermal Overload Trip
946 to 951	Not used		
952	DLR I>1 Trip	DLR Ampacity Prot Trip (P341 7x)	1st Stage DLR Ampacity Protection Trip
953	DLR I>2 Trip	DLR Ampacity Prot Trip (P341 7x)	2nd Stage DLR Ampacity Protection Trip
954	DLR I>3 Trip	DLR Ampacity Prot Trip (P341 7x)	3rd Stage DLR Ampacity Protection Trip
955	DLR I>4 Trip	DLR Ampacity Prot Trip (P341 7x)	4th Stage DLR Ampacity Protection Trip
956	DLR I>5 Trip	DLR Ampacity Prot Trip (P341 7x)	5th Stage DLR Ampacity Protection Trip
957	DLR I>6 Trip	DLR Ampacity Prot Trip (P341 7x)	6th Stage DLR Ampacity Protection Trip
958 to 986	Not used		
987	CL Input 1 Trip	Current Loop Inputs	Current Loop Input (transducer input) 1 Trip
988	CL Input 2 Trip	Current Loop Inputs	Current Loop Input (transducer input) 2 Trip
989	CL Input 3 Trip	Current Loop Inputs	Current Loop Input (transducer input) 3 Trip
990	CL Input 4 Trip	Current Loop Inputs	Current Loop Input (transducer input) 4 Trip
991	Not used		
992	Any Start	All protection	Any Start
993 to 1007	Not used		
1008	IN>1 Start	Earth Fault	1st Stage Earth Fault Start
1009	IN>2 Start	Earth Fault	2nd Stage Earth Fault Start
1010	IN>3 Start	Earth Fault	3rdt Stage Earth Fault Start
1011	IN>4 Start	Earth Fault	4th Stage Earth Fault Start
1012	ISEF>1 Start	Sensitive Earth Fault	1st Stage Sensitive Earth Fault Start
1013	ISEF>2 Start	Sensitive Earth Fault	2nd Stage Sensitive Earth Fault Start
1014	ISEF>3 Start	Sensitive Earth Fault	3rd Stage Sensitive Earth Fault Start
1015	ISEF>4 Start	Sensitive Earth Fault	4th Stage Sensitive Earth Fault Start
1016 to 1039	Not used		
1040	I>1 Start	Phase Overcurrent	1st Stage Overcurrent Start 3ph
1041	I>1 Start A	Phase Overcurrent	1st Stage Overcurrent Start A
1042	I>1 Start B	Phase Overcurrent	1st Stage Overcurrent Start B
1043	I>1 Start C	Phase Overcurrent	1st Stage Overcurrent Start C
1044	I>2 Start	Phase Overcurrent	2nd Stage Overcurrent Start 3ph
1045	I>2 Start A	Phase Overcurrent	2nd Stage Overcurrent Start A
1046	I>2 Start B	Phase Overcurrent	2nd Stage Overcurrent Start B
1047	I>2 Start C	Phase Overcurrent	2nd Stage Overcurrent Start C
1048	I>3 Start	Phase Overcurrent	3rd Stage Overcurrent Start 3ph

DDB no.	English text	Source	Description
1049	I>3 Start A	Phase Overcurrent	3rd Stage Overcurrent Start A
1050	I>3 Start B	Phase Overcurrent	3rd Stage Overcurrent Start B
1051	I>3 Start C	Phase Overcurrent	3rd Stage Overcurrent Start C
1052	I>4 Start	Phase Overcurrent	4th Stage Overcurrent Start 3ph
1053	I>4 Start A	Phase Overcurrent	4th Stage Overcurrent Start A
1054	I>4 Start B	Phase Overcurrent	4th Stage Overcurrent Start B
1055	I>4 Start C	Phase Overcurrent	4th Stage Overcurrent Start C
1056 to 1063	Not Used		
1064	I2>1 Start	NPS Overcurrent	1st Stage Negative Phase Sequence Overcurrent Start
1065	I2>2 Start	NPS Overcurrent	1st Stage Negative Phase Sequence Overcurrent Start
1066	I2>3 Start	NPS Overcurrent	1st Stage Negative Phase Sequence Overcurrent Start
1067	I2>4 Start	NPS Overcurrent	1st Stage Negative Phase Sequence Overcurrent Start
1068	IA< Start	Undercurrent	A phase Undercurrent Start (used in CB Fail logic)
1069	IB< Start	Undercurrent	B phase Undercurrent Start (used in CB Fail logic)
1070	IC< Start	Undercurrent	C phase Undercurrent Start (used in CB Fail logic)
1071	ISEF< Start	Undercurrent	Sensitive Earth Fault Undercurrent Start (used in CB Fail logic)
1072	Not Used		
1073	I> BlockStart	Phase Over Current	I> blocked overcurrent start. Start signal from all stages of I> protection for use in blocking schemes.
1074	IN/SEF>Blk Start	EF & SEF	IN/ISEF> blocked overcurrent start. Start signal from all stages of IN> and ISEF> protection for use in blocking schemes.
1075 to 1087	Not Used		
1088	VN>1 Start	Residual O/V NVD	1st Stage Residual Overvoltage Start (Derived O/V)
1089	VN>2 Start	Residual O/V NVD	2nd Stage Residual Overvoltage Start (Derived O/V)
1090	VN>3 Start	Residual O/V NVD	1st Stage Residual Overvoltage Start (VN1 Measured O/V)
1091	VN>4 Start	Residual O/V NVD	2nd Stage Residual Overvoltage Start (VN1 Measured O/V)
1092 to 1093	Not Used		
1094	V>1 Start	Phase Overvoltage	1st Stage Phase Overvoltage Start 3ph
1095	V>1 Start A/AB	Phase Overvoltage	1st Stage Phase Overvoltage Start A/AB
1096	V>1 Start B/BC	Phase Overvoltage	1st Stage Phase Overvoltage Start B/BC
1097	V>1 Start C/CA	Phase Overvoltage	1st Stage Phase Overvoltage Start C/CA
1098	V>2 Start	Phase Overvoltage	2nd Stage Phase Overvoltage Start 3ph
1099	V>2 Start A/AB	Phase Overvoltage	2nd Stage Phase Overvoltage Start A/AB
1100	V>2 Start B/BC	Phase Overvoltage	2nd Stage Phase Overvoltage Start B/BC
1101	V>2 Start C/CA	Phase Overvoltage	2nd Stage Phase Overvoltage Start C/CA
1102	V2>1 Start	NPS Overvoltage	Negative Phase Sequence Overvoltage Start
1103	V<1 Start	Phase Undervoltage	1st Stage Phase Undervoltage Start 3ph
1104	V<1 Start A/AB	Phase Undervoltage	1st Stage Phase Undervoltage Start A/AB
1105	V<1 Start B/BC	Phase Undervoltage	1st Stage Phase Undervoltage Start B/BC
1106	V<1 Start C/CA	Phase Undervoltage	1st Stage Phase Undervoltage Start C/CA
1107	V<2 Start	Phase Undervoltage	2nd Stage Phase Undervoltage Start 3ph
1108	V<2 Start A/AB	Phase Undervoltage	2nd Stage Phase Undervoltage Start A/AB
1109	V<2 Start B/BC	Phase Undervoltage	2nd Stage Phase Undervoltage Start B/BC

DDB no.	English text	Source	Description
1110	V<2 Start C/CA	Phase Undervoltage	2nd Stage Phase Undervoltage Start C/CA
1111 to 1139	Not Used		
1140	Power1 Start	Power	1st Stage Power Start
1141	Power2 Start	Power	2nd Stage Power Start
1142	SPower1 Start	Sensitive Power	1st Stage Sensitive Power Start
1143	SPower2 Start	Sensitive Power	2nd Stage Sensitive Power Start
1144 to 1171	Not Used		
1172	F<1 Start	Underfrequency	1st Stage Underfrequency Start
1173	F<2 Start	Underfrequency	2nd Stage Underfrequency Start
1174	F<3 Start	Underfrequency	3rd Stage Underfrequency Start
1175	F<4 Start	Underfrequency	4th Stage Underfrequency Start
1176	F>1 Start	Overfrequency	1st Stage Overfrequency Start
1177	F>2 Start	Overfrequency	2nd Stage Overfrequency Start
1178 to 1183	Not Used		
1184	df/dt>1 Start	df/dt	1st Stage Rate of Change of Frequency Start
1185	df/dt>2 Start	df/dt	2nd Stage Rate of Change of Frequency Start
1186	df/dt>3 Start	df/dt	3rd Stage Rate of Change of Frequency Start
1187	df/dt>4 Start	df/dt	4th Stage Rate of Change of Frequency Start
1188 to 1231	Not Used		
1232	CLI1 Alarm Start	Current Loop Inputs	Current Loop Input (transducer input) 1 Alarm Start
1233	CLI2 Alarm Start	Current Loop Inputs	Current Loop Input (transducer input) 2 Alarm Start
1234	CLI3 Alarm Start	Current Loop Inputs	Current Loop Input (transducer input) 3 Alarm Start
1235	CLI4 Alarm Start	Current Loop Inputs	Current Loop Input (transducer input) 4 Alarm Start
1236	CLI1 Trip Start	Current Loop Inputs	Current Loop Input (transducer input) 1 Trip Start
1237	CLI2 Trip Start	Current Loop Inputs	Current Loop Input (transducer input) 2 Trip Start
1238	CLI3 Trip Start	Current Loop Inputs	Current Loop Input (transducer input) 3 Trip Start
1239	CLI4 Trip Start	Current Loop Inputs	Current Loop Input (transducer input) 4 Trip Start
1240 to 1247	Not Used		
1248	VTS Fast Block	VT Supervision	VT Supervision Fast Block - blocks elements which would otherwise mal-operate immediately after a fuse failure event occurs
1249	VTS Slow Block	VT Supervision	VT Supervision Slow Block - blocks elements which would otherwise mal-operate some time after a fuse failure event occurs
1250 to 1262	Not Used		
1263	CTS-1 Block	CT Supervision	CT Supervision Block for IA/IB/IC (current transformer supervision). CTS-1 Block DDBs can be used to block protection functions not automatically blocked.
1264 to 1277	Not Used		
1278	Control Trip	CB Control	Control Trip
1279	Control Close	CB Control	Control Close
1280	Close in Prog	CB Control	Control Close in Progress

DDB no.	English text	Source	Description
1281	Lockout Alarm	CB Monitoring	Composite Lockout Alarm from CB Monitoring functions (I ^ Lockout Alarm OR CB Ops Lockout OR CB Op Time Lock OR Fault Freq Lock)
1282	CB Open 3 ph	CB Status	Three phase Circuit breaker Open Status
1283	CB Closed 3 ph	CB Status	Three phase Circuit breaker Closed Status
1284	All Poles Dead	Poledead	Pole dead logic detects 3 phase breaker open condition
1285	Any Pole Dead	Poledead	Pole dead logic detects at least one breaker pole open
1286	Pole Dead A	Poledead	Phase A Pole Dead
1287	Pole Dead B	Poledead	Phase B Pole Dead
1288	Pole Dead C	Poledead	Phase C Pole Dead
1289 to 1292	Not Used		
1293	Freq High	Frequency Tracking	Frequency tracking detects frequency above the allowed range
1294	Freq Low	Frequency Tracking	Frequency tracking detects frequency below the allowed range
1295	Freq Not found	Frequency Tracking	Frequency Not Found by the frequency tracking
1296 to 1298	Not Used		
1299	Reconnection	Reconnection	Reconnection Time Delay Output
1300	Recon LOM-1	Reconnection	Reconnect LOM (Unqualified)
1301	Recon Disable-1	Reconnection	Reconnect Disable (Unqualified)
1302	Recon LOM	Reconnection	Reconnect LOM
1303	Recon Disable	Reconnection	Reconnect Disable
1304 to 1313	Not Used		
1314	Blk Rmt. CB Ops	PSL	Blocks remote CB Trip/Close commands when asserted
1315 to 1327	Not Used		
1328	Live Gen	Voltage Monitors	Indicates live generator voltage condition is detected
1329	Dead Gen	Voltage Monitors	Indicates dead generator voltage condition is detected
1330	Live Bus	Voltage Monitors	Indicates live busbar voltage condition is detected
1331	Dead Bus	Voltage Monitors	Indicates dead busbar voltage condition is detected
1332	Check Sync 1 OK	Check Synchronization	Check synchronization stage 1 OK
1333	Check Sync 2 OK	Check Synchronization	Check synchronization stage 1 OK
1334	Not Used		
1335	SysChks Inactive	Check Synchronization	System checks inactive (output from the check synchronism, and other voltage checks)
1336	CS1 Enabled	Check Synchronization	Check sync. stage 1 OK
1337	CS2 Enabled	Check Synchronization	Check sync. stage 2 OK
1338	SysSplit Enabled	Check Synchronization	System Split function enabled
1339	CS1 Slipfreq>	Check Synchronization	Operates when 1st stage check sync. slip frequency is above the check sync. 1 slip frequency setting
1340	CS1 Slipfreq<	Check Synchronization	Operates when 1st stage check sync. slip frequency is below the check sync. 1 slip frequency setting
1341	CS2 Slipfreq>	Check Synchronization	Operates when 2nd stage check sync. slip frequency is above the check sync. 2 slip frequency setting

DDB no.	English text	Source	Description
1342	CS2 Slipfreq<	Check Synchronization	Operates when 2nd stage check sync. slip frequency is below the check sync. 2 slip frequency setting
1343	CS Vgen<	Check Synchronization	Indicates the generator voltage is less than the check sync. undervoltage setting
1344	CS Vbus<	Check Synchronization	Indicates the busbar voltage is less than the check sync. undervoltage setting
1345	CS Vgen>	Check Synchronization	Indicates the generator voltage is greater than the check sync. overvoltage setting
1346	CS Vbus>	Check Synchronization	Indicates the busbar voltage is greater than the check sync. overvoltage setting
1347	CS Freq Low	Check Synchronization	Indicates the generator frequency is less than the Gen Under Freq setting
1348	CS Freq High	Check Synchronization	Indicates the generator frequency is greater than the Gen Over Freq setting
1349	CS Vgen>Vbus	Check Synchronization	Indicates that the generator voltage is greater than bus voltage + check sync. differential voltage setting
1350	CS Vgen<Vbus	Check Synchronization	Indicates the busbar voltage is greater than line voltage + check sync. differential voltage setting
1351	CS1 Fgen>Fbus	Check Synchronization	Indicates the generator frequency is greater than the busbar frequency + check sync. 1 slip frequency setting where check sync. 1 slip control is set to frequency
1352	CS1 Fgen<Fbus	Check Synchronization	Indicates the busbar frequency is greater than generator frequency + check sync. 1 slip frequency setting where check sync. 1 slip control is set to frequency
1353	CS1 Ang Not OK +	Check Synchronization	Indicates the generator angle leads the bus angle and falls in range + CS1 phase angle (deg.) to 180°
1354	CS1 Ang Not OK -	Check Synchronization	Indicates if the line angle lags the busbar angle and falls in range - CS1 phase angle (deg.) to -180°
1355	CS2 Fgen>Fbus	Check Synchronization	Indicates the generator frequency is greater than the busbar frequency + check sync. 2 slip frequency setting where check sync. 1 slip control is set to frequency
1356	CS2 Fgen<Fbus	Check Synchronization	Indicates the busbar frequency is greater than generator frequency + check sync. 2 slip frequency setting where check sync. 1 slip control is set to frequency
1357	CS2 Ang Not OK +	Check Synchronization	Indicates the generator angle leads the bus angle and falls in range + CS2 phase angle (deg.) to 180°
1358	CS2 Ang Not OK -	Check Synchronization	Indicates if the line angle lags the busbar angle and falls in range – CS2 phase angle (deg.) to -180°
1359	CS Ang Rot ACW	Check Synchronization	The direction of rotation of generator angle, using busbar as a reference, is anti-clockwise (ACW)
1360	CS Ang Rot CW	Check Synchronization	The direction of rotation of generator angle, using busbar as a reference, is clockwise (CW)
1361	CS Guard Enabled	Check Synchronization	Check Synch Guard is on. Check synch is blocked.
1362	Man Check Synch	PSL	Input to the circuit breaker control logic to indicate manual check synchronization conditions are satisfied
1363	CS Guard Enable	PSL	Check Synch Guard Enable input (CS Block input).
1364 to 1375	Not Used		
1376	Control Input 1	Control Input Command	Control Input 1 - for SCADA and menu commands into PSL
1407	Control Input 32	Control Input Command	Control Input 32 - for SCADA and menu commands into PSL

DDB no.	English text	Source	Description
1408	Virtual Input 1	GOOSE Input Command	Virtual Input 1 - allows binary signals that are mapped to virtual inputs to interface into PSL
1471	Virtual Input 64	GOOSE Input Command	Virtual Input 64 - allows binary signals that are mapped to virtual inputs to interface into PSL
1472 to 1503	Not Used		
1504	Quality VIP 1	GOOSE	GOOSE Virtual input 1 Quality bit
1567	Quality VIP 64	GOOSE	GOOSE Virtual input 64 Quality bit
1568 to 1599	Not Used		
1600	PubPres VIP 1	GOOSE	GOOSE Virtual input 1 publisher bit
1663	PubPres VIP 64	GOOSE	GOOSE Virtual input 64 publisher bit
1664 to 1695	Not Used		
1696	Virtual Output 01	GOOSE	Virtual Output 1 - output allows user to control a binary signal which can be mapped via SCADA protocol output to other devices
1759	Virtual Output 64	GOOSE	Virtual Output 64 - output allows user to control a binary signal which can be mapped via SCADA protocol output to other devices
1760 to 1791	Not Used		
1792	PSL Int 1	PSL	PSL Internal Node
2047	PSL Int 256	PSL	PSL Internal Node

Table 1 - Description of available Logic Nodes

3 DEFAULT PROGRAMMABLE SCHEME LOGIC (PSL)

3.1 P341 Model Options

The following section details the default settings of the PSL..

The P341 model options are as follows:

Model	Opto inputs	Relay outputs
P341xxxxxxxxxxJ	8-24	7-24

Table 2 - Default settings

3.2 Logic Input Mapping

The default mappings for each of the opto-isolated inputs are as shown in Table 3:

Opto-Input number	P341 relay text	Function
1	Input L1	L1 Setting Group selection
2	Input L2	L2 Setting Group selection
3	Input L3	L3 Block IN>3 & IN>4 Timer
4	Input L4	L4 Block I>3 & I>4 Timer
5	Input L5	L5 Reset Relays and LEDs
6	Input L6	L6 Ext Prot Trip
7	Input L7	L7 52a (CB Status)
8	Input L8	L8 52b (CB Status)
9	Input L9	L9 Not Used
10	Input L10	L10 Not Used
11	Input L11	L11 Not Used
12	Input L12	L12 Not Used
13	Input L13	L13 Not Used
14	Input L14	L14 Not Used
15	Input L15	L15 Not Used
16	Input L16	L16 Not Used
17	Input L17	L17 Not Used
18	Input L18	L18 Not Used
19	Input L19	L19 Not Used
20	Input L20	L20 Not Used
21	Input L21	L21 Not Used
22	Input L22	L22 Not Used
23	Input L23	L23 Not Used
24	Input L24	L24 Not Used

Table 3 - P341 opto inputs default mappings

3.3 Relay Output Contact Mapping

The default mappings for each of the relay output contacts are as shown in Table 4:

Relay contact number	P341 relay text	P341 relay conditioner	Function
1	Output R1	Straight-through	R1 Block IN/ISEF
2	Output R2	Straight-through	R2 BlockStart I>
3	Output R3	Dwell 100 ms	R3 Any Protection Trip
4	Output R4	Delayed Drop-off timer 500 ms	R4 General Alarm
5	Output R5	Dwell 100 ms	R5 CB Fail
6	Output R6	Straight-through	R6 Control Close
7	Output R7	Straight-through	R7 Trip CB
8	Output R8	Straight-through	R8 Not Used
9	Output R9	Straight-through	R9 Not Used
10	Output R10	Straight-through	R10 Not Used
11	Output R11	Straight-through	R11 Not Used
12	Output R12	Straight-through	R12 Not Used
13	Output R13	Straight-through	R13 Not Used
14	Output R14	Straight-through	R14 Not Used
15	Output R15	Straight-through	R15 Not Used
16	Output R16	Straight-through	R16 Not Used
17	Output R17	Straight-through	R17 Not Used
18	Output R18	Straight-through	R18 Not Used
19	Output R19	Straight-through	R19 Not Used
20	Output R20	Straight-through	R20 Not Used
21	Output R21	Straight-through	R21 Not Used
22	Output R22	Straight-through	R22 Not Used
23	Output R23	Straight-through	R23 Not Used
24	Output R24	Straight-through	R24 Not Used

Table 4 - P341 relay output contacts default mappings

Note: *To generate a fault record, connect one or several contacts to the "Fault Record Trigger" in PSL. The triggering contact should be 'self reset' and not a latching. If a latching contact were chosen the fault record would not be generated until the contact had fully reset.*

3.4 Programmable LED Output Mapping

The default mappings for each of the programmable LEDs are as shown in Table 5 for the P341 which have red LEDs:

LED number	LED Input connection/text	Latched	P341 LED function indication
1	LED 1 Red	Yes	Earth Fault Trip -IN>1/2/3/4 Trip, ISEF>1/2/3/4 Trip, /IREF>Trip, VN>1/2/3/4 Trip
2	LED 2 Red	Yes	Overcurrent Trip - I>1/2 Trip (3x software), I>1/2/3/4 Trip (7x software)
3	LED 3 Red	Yes	Overcurrent Trip - I>3/4 Trip (3x software), DLR I>1/2/3/4/5/6 Trip (7x software)
4	LED 4 Red	Yes	df/dt>1/2/3/4 Trip and V Shift Trip
5	LED 5 Red	Yes	Voltage Trip - V>1/2 trip, V<1/2 Trip, V2>1 Trip
6	LED 6 Red	Yes	Frequency Trip - F>1/2 Trip, F<1/2/3/4 Trip
7	LED 7 Red	Yes	Power Trip - Power 1/2 Trip, SPower 1/2 Trip
8	LED 8 Red	No	Any Start

Table 5 - P341 programmable LED default mappings

3.5 Fault Recorder Start Mapping

The default mapping for the signal which initiates a fault record is as shown Table 6:

Initiating signal	Fault trigger
Relay 3 (DDB 002)	Initiate fault recording from main protection trip

Table 6 - Default fault record initiation

3.6 PSL DATA Column

The P34x relay contains a PSL DATA column that can be used to track PSL modifications. A total of 12 cells are contained in the PSL DATA column, 3 for each setting group. The function for each cell is shown below:

Grp. PSL Ref.	When downloading a PSL to the relay, the user will be prompted to enter which group the PSL is for and a reference identifier. The first 32 characters of the reference ID will be displayed in this cell The ⟨ and ⟩ keys can be used to scroll through 32 characters as only 16 can be displayed at any one time.
18 Nov 2002 08:59:32.047	This cell displays the date and time when the PSL was down loaded to the relay.
Grp. 1 PSL ID - 2062813232	This is a unique number for the PSL that has been entered. Any change in the PSL will result in a different number being displayed.

Note *The above cells are repeated for each setting group.*

4 P341 PROGRAMMABLE SCHEME LOGIC (V36 SOFTWARE)

4.1 Input Mappings

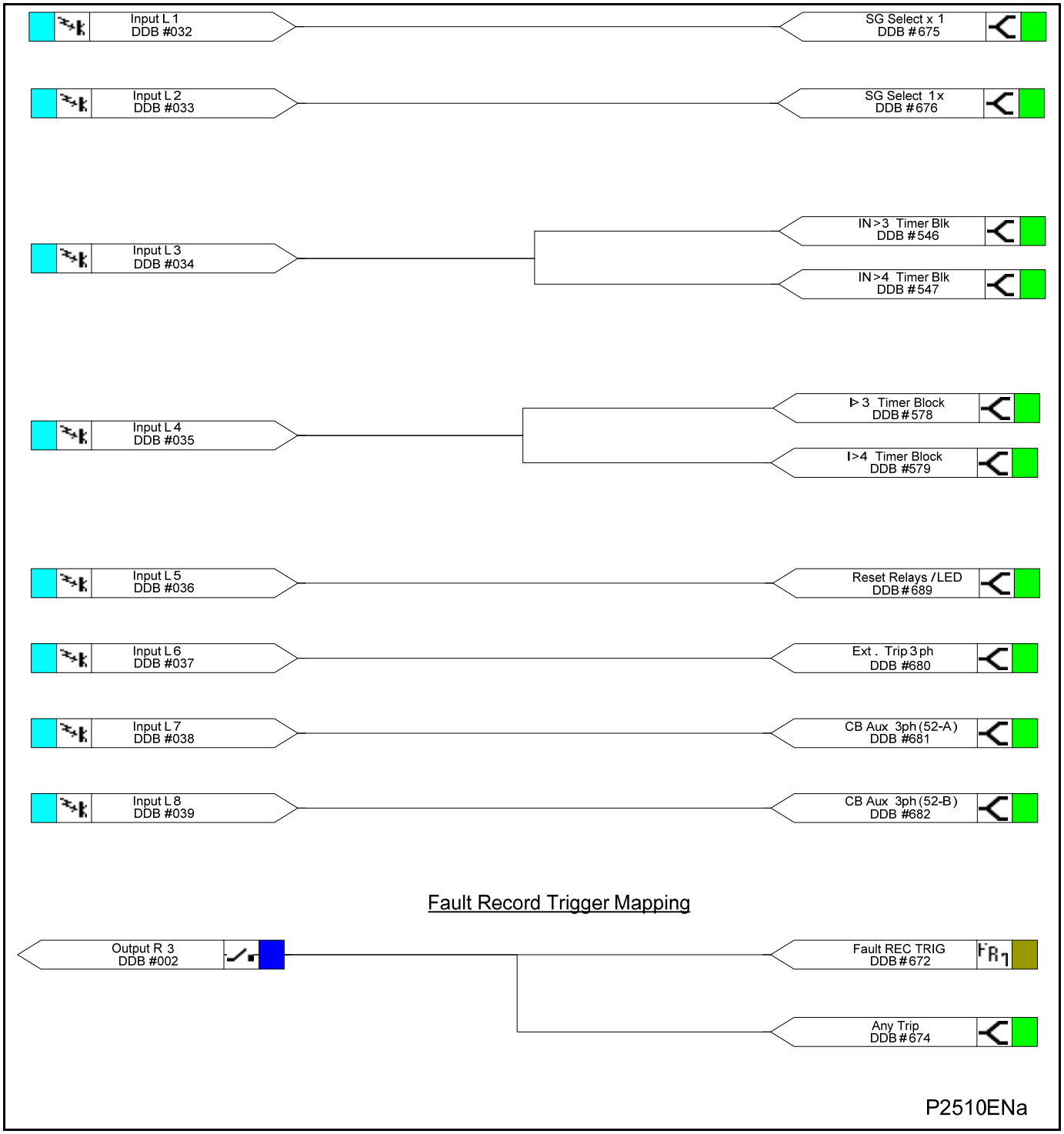

Figure 7 - Opto Input Mappings (P341 V36)

4.2 Output Mappings

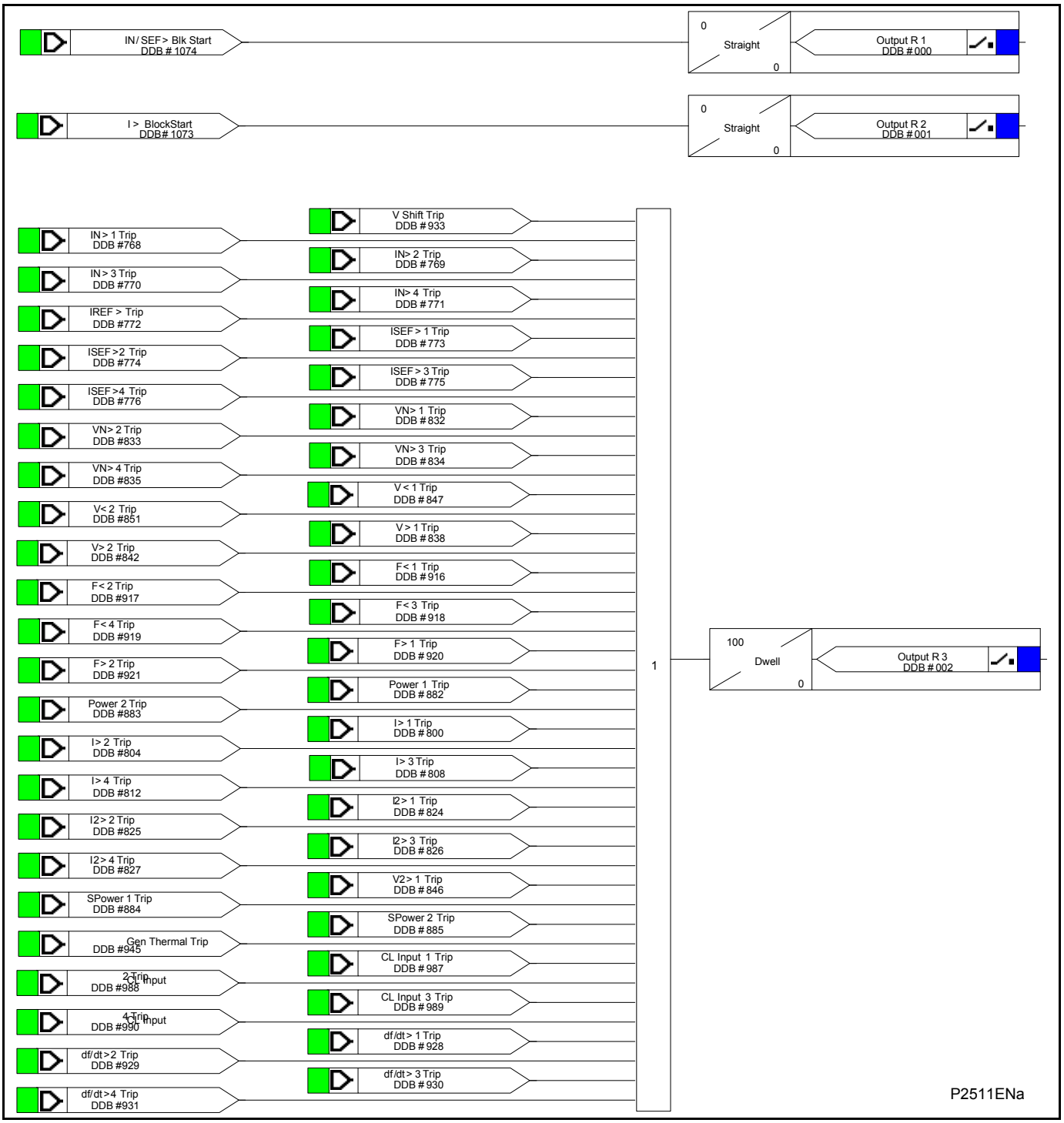

Figure 8 - Output Relay R1, R2, R3 Mappings (P341 V36)

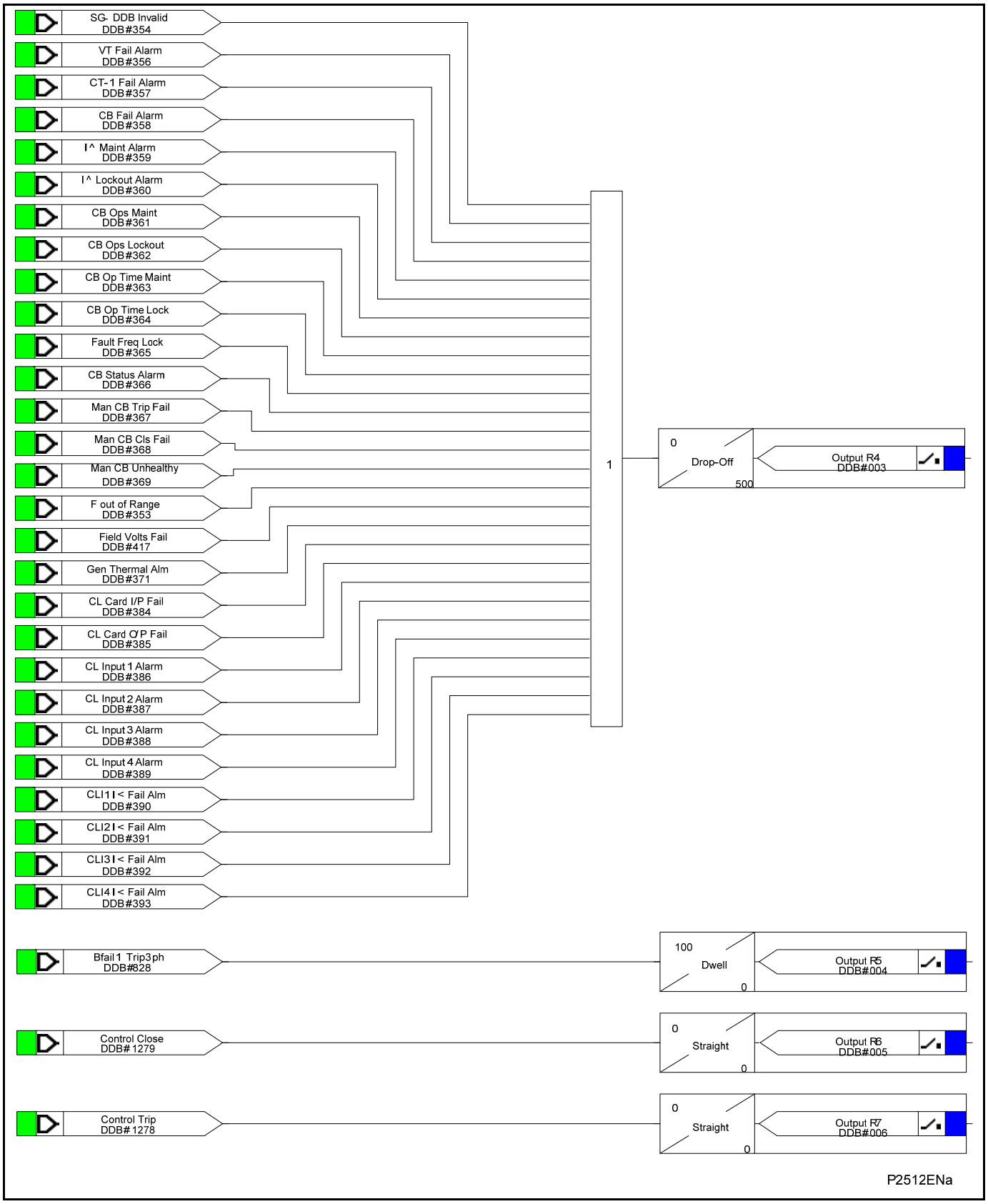

Figure 9 - Output Relay R4, R5, R6 and R7 (General Trip) Mappings (P341 V36)

4.3 LEDs Mappings

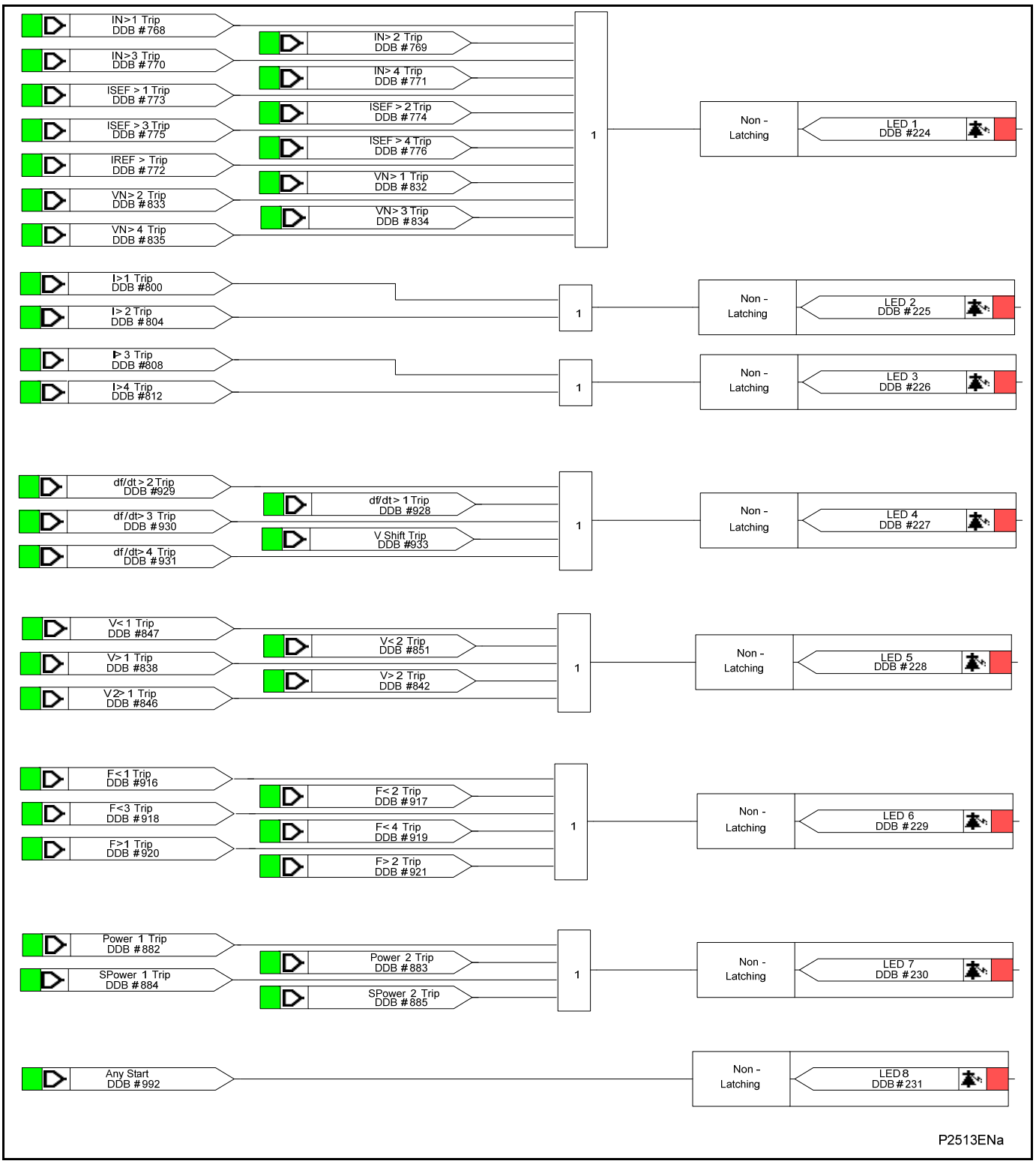

Figure 10 - LEDs Mappings (3x Software) (P341 V36)

4.4 Check Synch Mappings

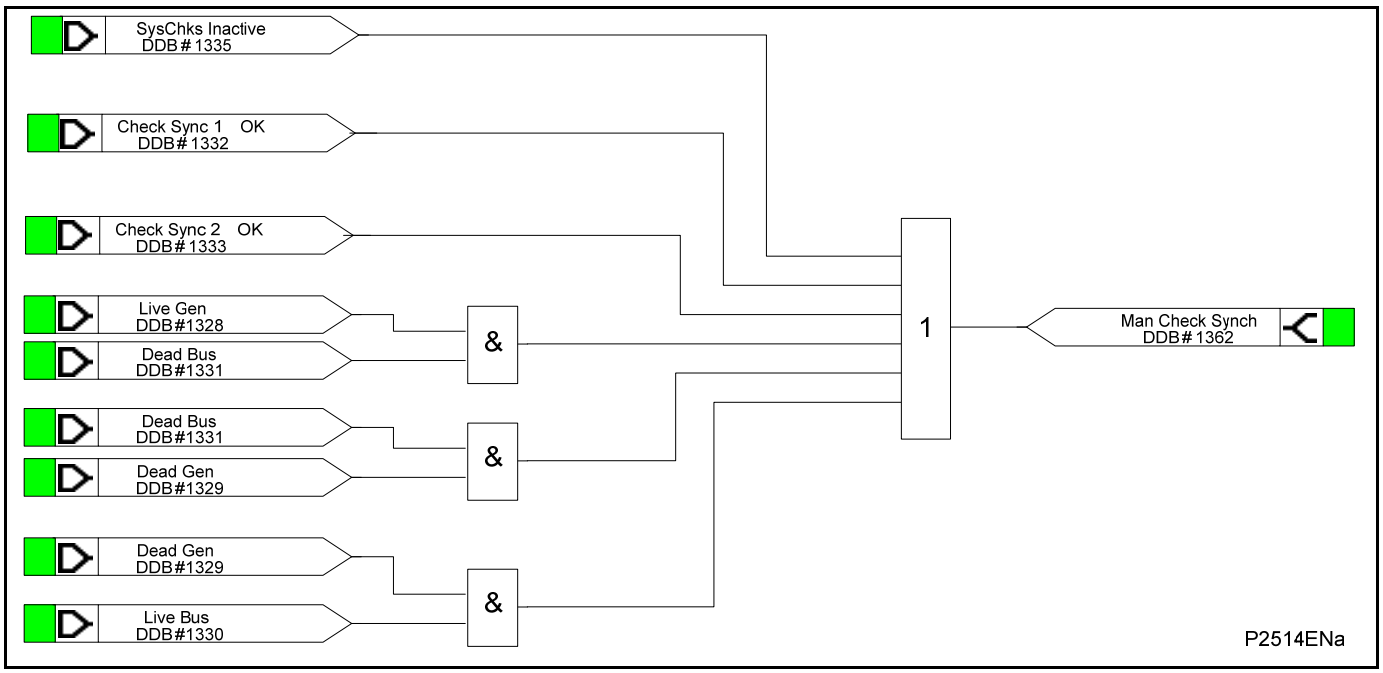

Figure 11 - Check Synch and Voltage Monitor Mappings (P341 V36)

5 P341 PROGRAMMABLE SCHEME LOGIC (V71 SOFTWARE)

5.1 Input Mappings

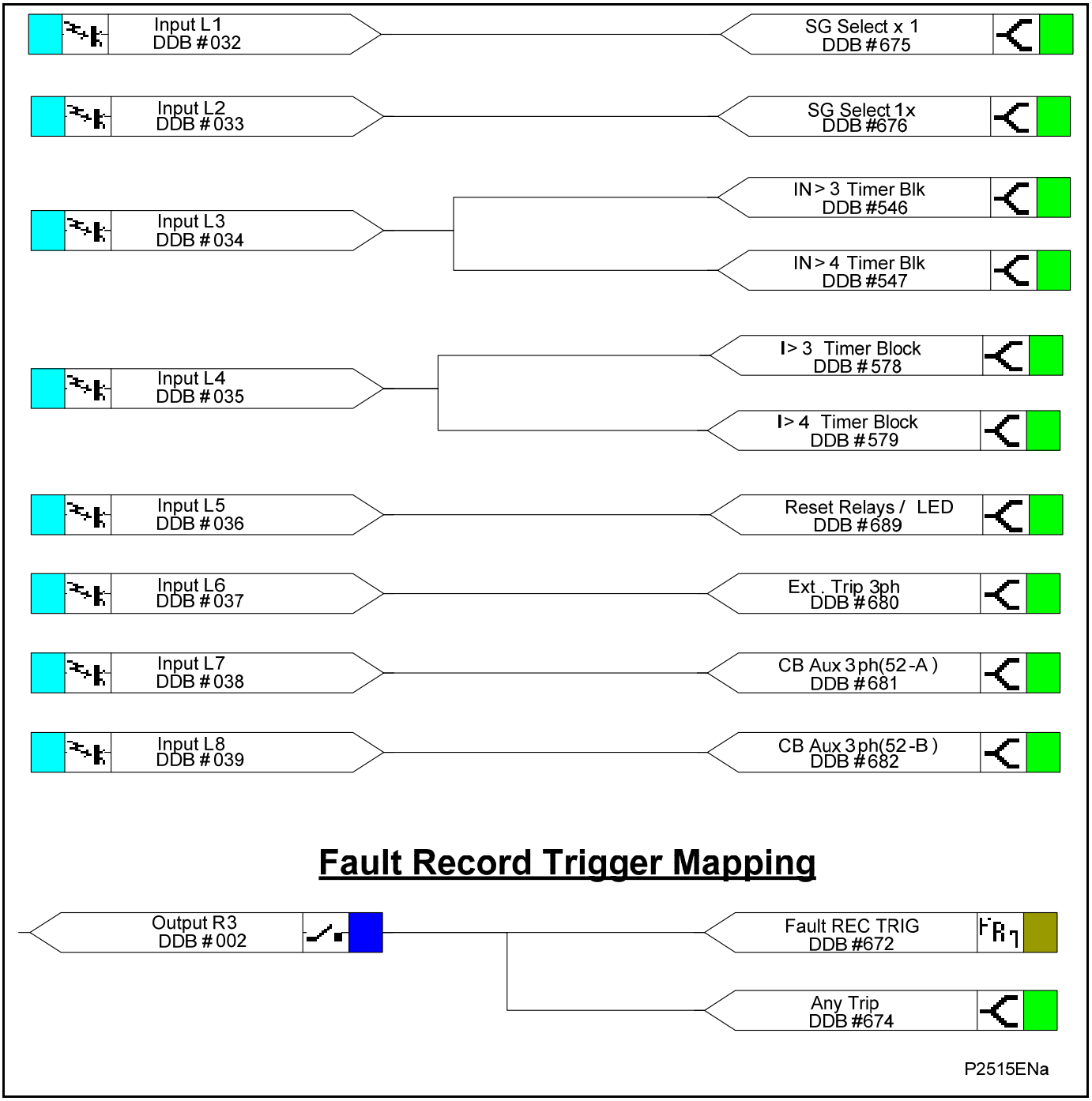

Figure 12 - Opto Input Mappings (P341 V71)

5.2 Output Mappings

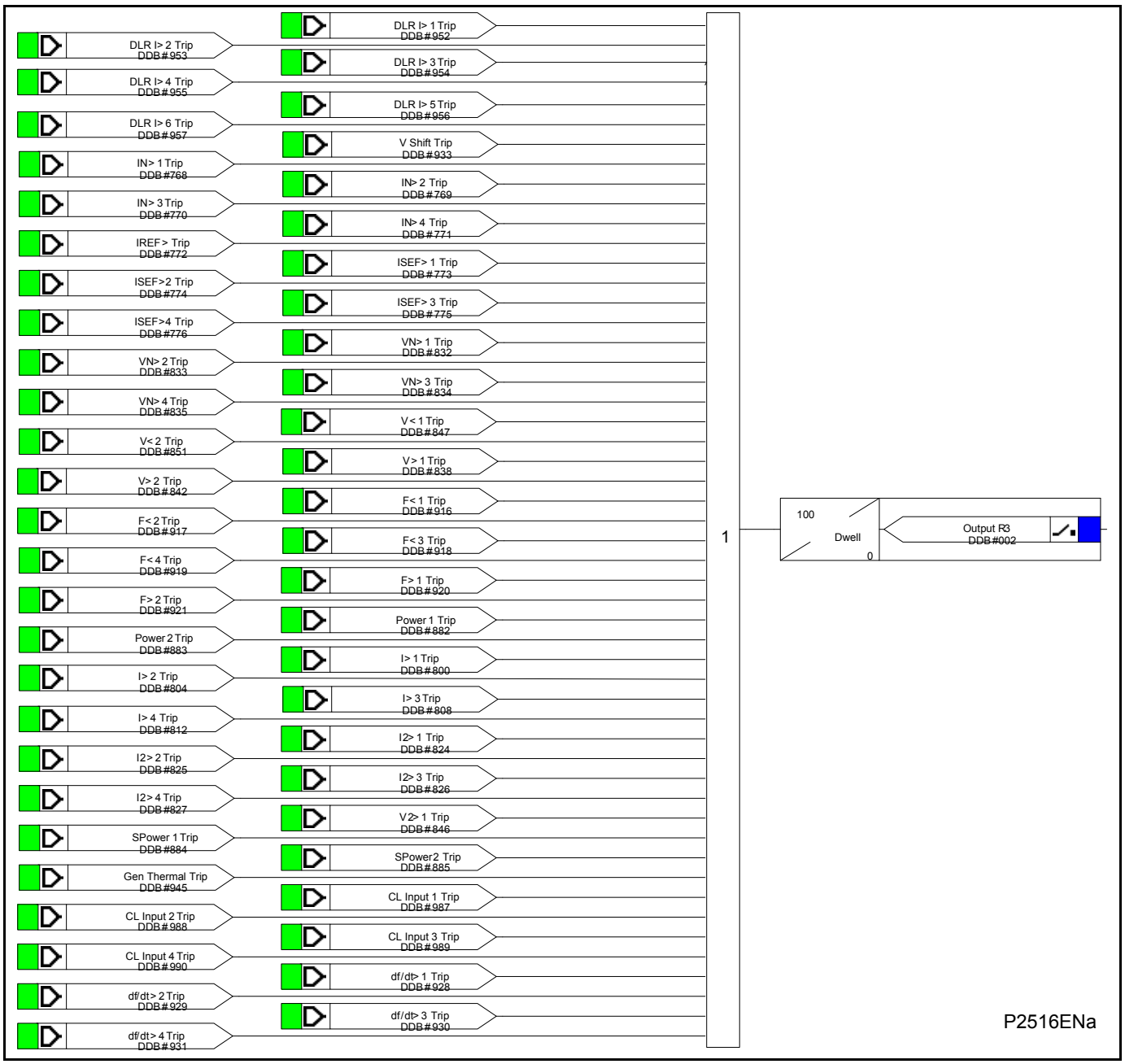

Figure 13 - Output Relay R1, R2, R3 Mappings (P341 V71)

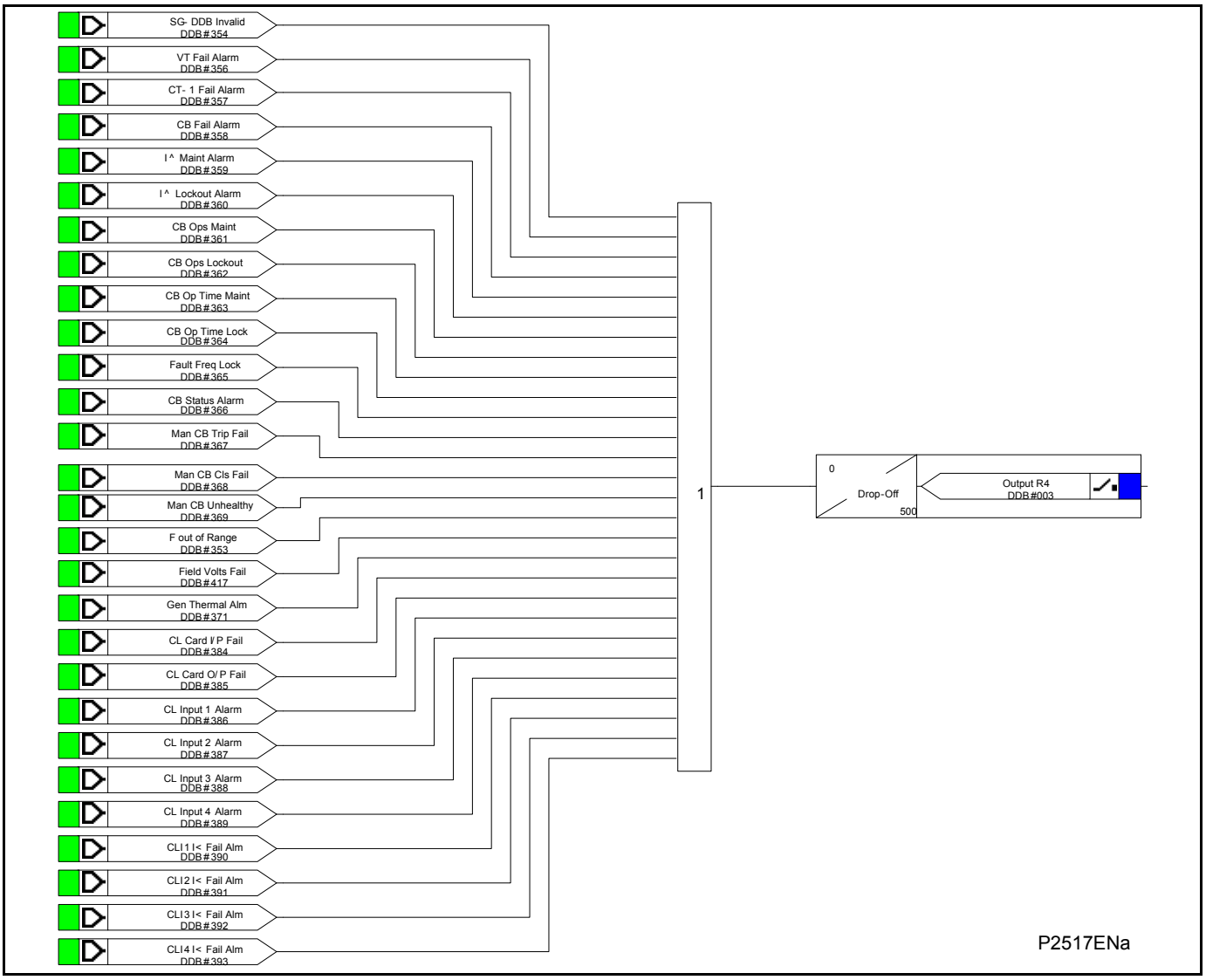

Figure 14 - Output Relay R4, R5, R6 and R7 (General Trip) Mappings (P341 V71)

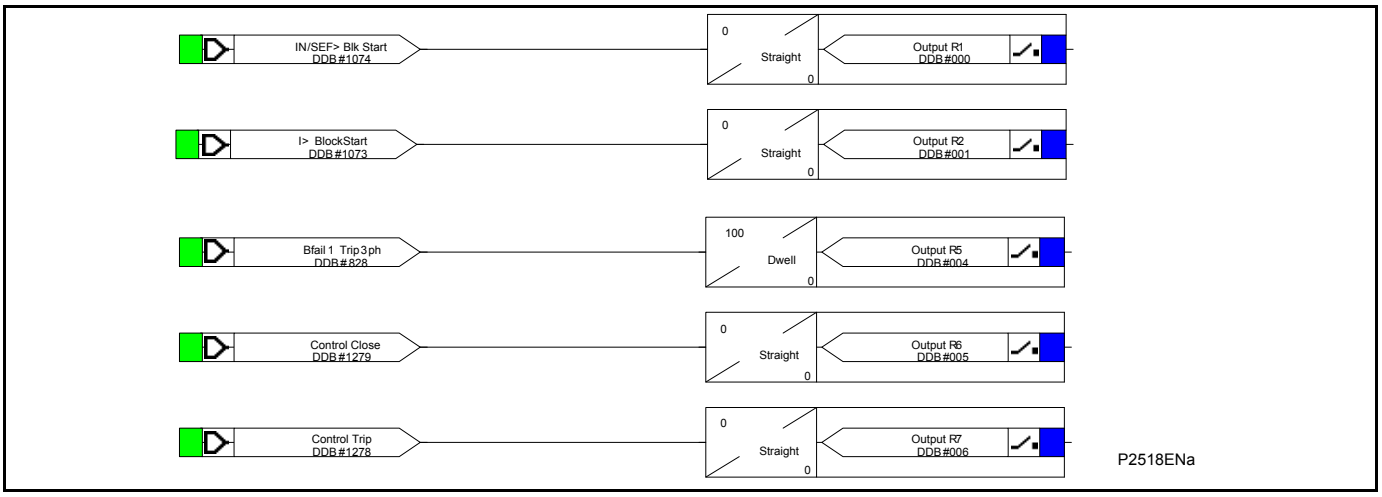

Figure 15 - Output Relay Mappings (P341 V71)

5.3 LED Mappings

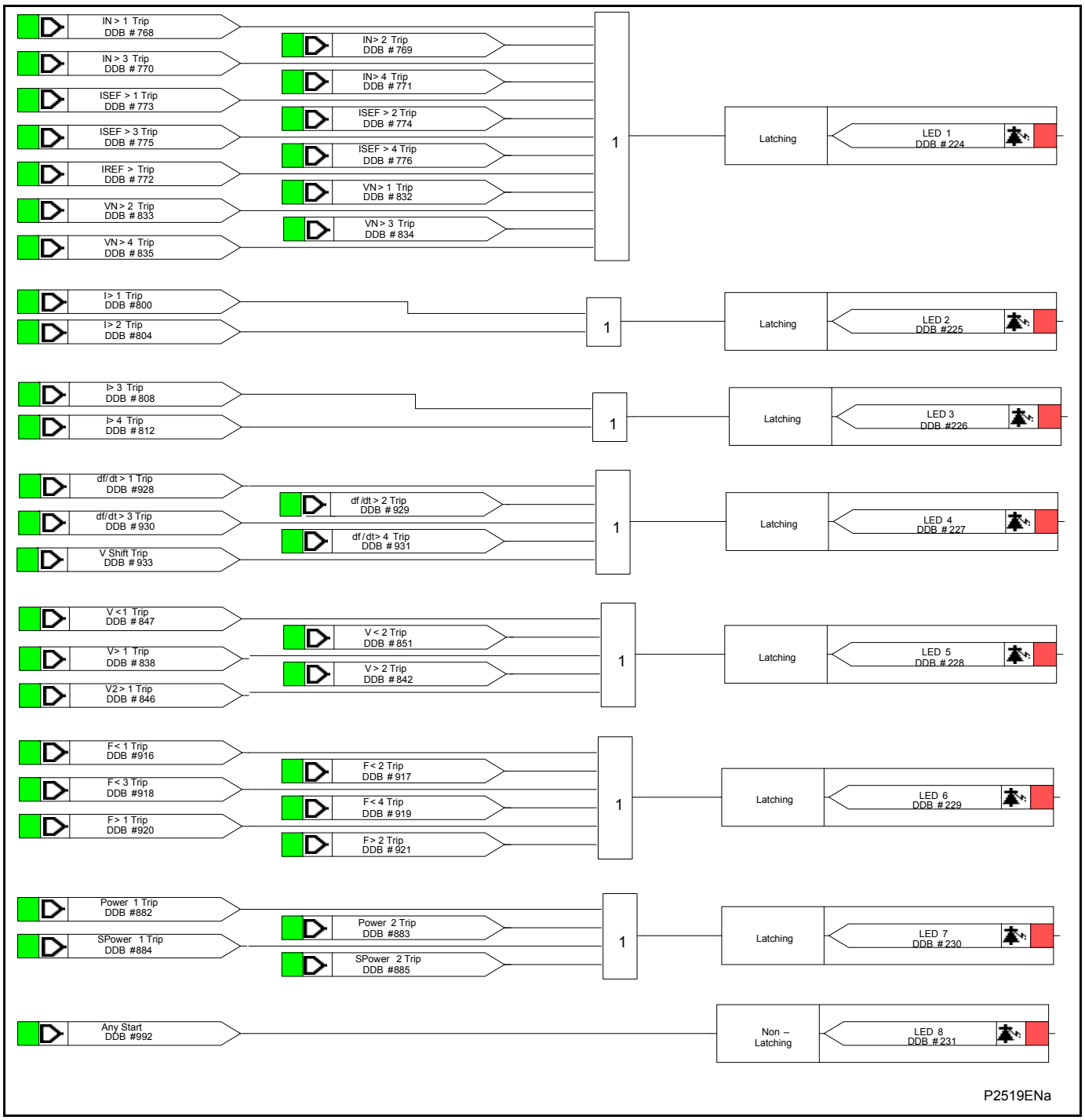

Figure 16 - LEDs Mappings (3x Software) (P341 V71)

5.4 Check Synch Mappings

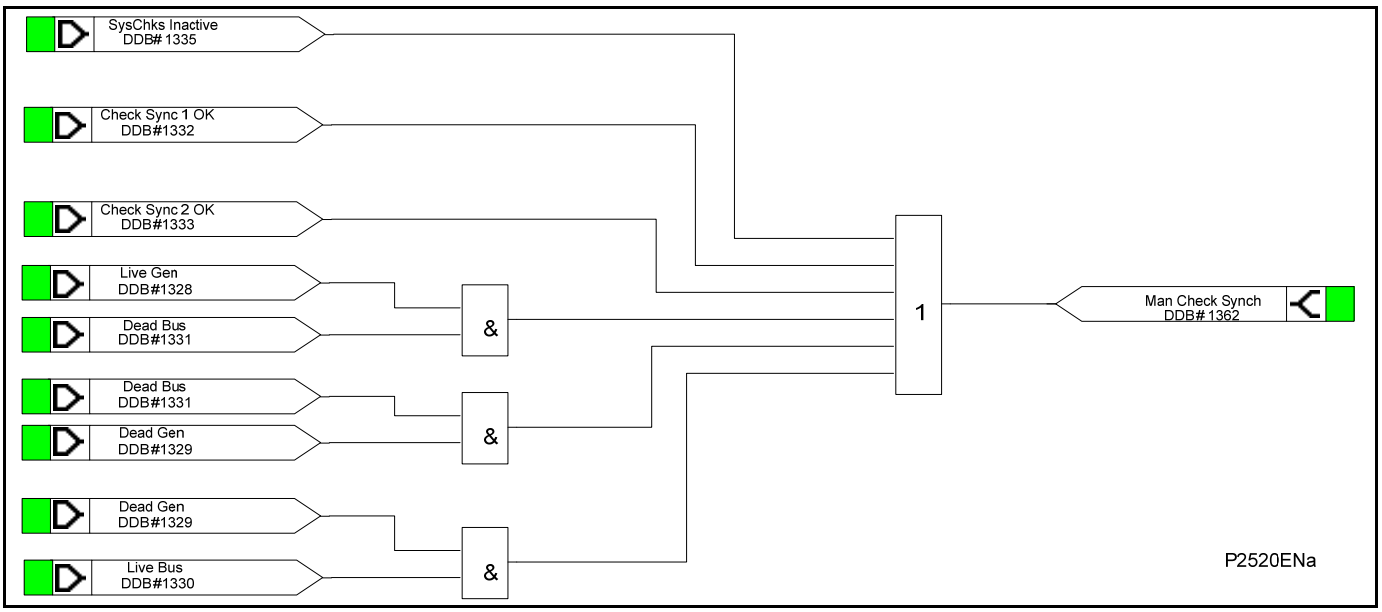

Figure 17 - Check Synch and Voltage Monitor Mappings (P341 V71)

Notes:

MEASUREMENTS AND RECORDING

CHAPTER 8

Date:	February 2012
Hardware Suffix:	J (P341)
Software Version:	36 and 71 (with DLR)
Connection Diagrams:	10P341xx (xx = 01 to 12)

CONTENTS

TABLES

1 INTRODUCTION

The P341 is equipped with integral measurements, event, fault and disturbance recording facilities suitable for analysis of complex system disturbances.

The relay is flexible enough to allow for the programming of these facilities to specific user application requirements and are discussed below.

2 EVENT AND FAULT RECORDS

The relay records and time tags up to 512 events and stores them in non-volatile (battery backed up) memory. This lets the system operator establish the sequence of events that occurred within the relay following a particular power system condition, switching sequence etc. When the available space is exhausted, the oldest event is automatically overwritten by the new one.

The real-time clock in the relay provides the time tag to each event, to a resolution of 1 ms.

The event records are available for viewing either via the frontplate LCD or remotely, via the communications ports (courier and MODBUS versions only).

Local viewing on the LCD is achieved in the menu column entitled **VIEW RECORDS**. This column allows viewing of event, fault and maintenance records and is shown in Table 1:

Menu text	Default setting	Setting range		Step size
		Min.	Max.	
VIEW RECORDS				
Select Event	0	0	249	
Setting range from 0 to 511. This selects the required event record from the possible 512 that may be stored. A value of 0 corresponds to the latest event and so on.				
Menu Cell Ref	(From record)	Latched alarm active, Latched alarm inactive, Self reset alarm active, Self reset alarm inactive, Relay contact event, Opto-isolated input event, Protection event, General event, Fault record event, Maintenance record event		
Indicates the type of event.				
Time and Date	Data			
Time & Date Stamp for the event given by the internal Real Time Clock.				
Event text	Data.			
Up to 32 Character description of the Event. See event sheet in the Relay Menu Database document, P341/EN/MD or Measurements and Recording chapter, P341/EN MR for details.				
Event Value	Data.			
32 bit binary string indicating ON or OFF (1 or 0) status of relay contact or opto input or alarm or protection event depending on event type. Unsigned integer is used for maintenance records. See event sheet in the Relay Menu Database document, *P341/EN/MD* or Measurements and Recording chapter, *P341/EN MR* for details.				
Select Fault	0	0	4	1
Setting range from 0 to 4. This selects the required fault record from the possible 5 that may be stored. A value of 0 corresponds to the latest fault and so on.				
Faulted Phase	00000000			
Displays the faulted phase as a binary string, bits 0 – 8 = Start A/B/C/N Trip A/B/C/N.				
Start elements 1	00000000000000000000000000000000			
32 bit binary string gives status of first 32 start signals. See Data Type G84 in the Relay Menu Database document, *P341/EN/MD* for details.				
Start elements 2	00000000000000000000000000000000			
32 bit binary string gives status of second 32 start signals. See Data Type G107 in the Relay Menu Database document, *P341/EN/MD* for details.				
Start elements 3	00000000000000000000000000000000			
32 bit binary string gives status of third 32 start signals. See Data Type G129 in the Relay Menu Database document, *P341/EN/MD* for details.				
Start elements 4	00000000000000000000000000000000			

Menu text	Default setting	Setting range		Step size
		Min.	Max.	
VIEW RECORDS				
32 bit binary string gives status of third 32 start signals. See Data Type G131 in Menu Database chapter, *P341/EN/MD* for details.				
Trip elements 1	00000000000000000000000000000000			
32 bit binary string gives status of first 32 trip signals. See Data Type G85 in the Relay Menu Database document, *P341/EN/MD* for details.				
Trip elements 2	00000000000000000000000000000000			
32 bit binary string gives status of second 32 trip signals. See Data Type G86 in the Relay Menu Database document, *P341/EN/MD* for details.				
Trip elements 3	00000000000000000000000000000000			
32 bit binary string gives status of third 32 trip signals. See Data Type G130 in the Relay Menu Database document, *P341/EN/MD* for details.				
Trip elements 4	00000000000000000000000000000000			
32 bit binary string gives status of third 32 trip signals. See Data Type G132 in Menu Database chapter, *P341/EN/MD* for details.				
Fault Alarms	0000001000000000			
32 bit binary string gives status of fault alarm signals. See Data Type G87 in the Relay Menu Database document, *P341/EN/MD* for details.				
Fault Alarms2	0000001000000000			
32 bit binary string gives status of fault alarm signals. See Data Type G89 in the Relay Menu Database document, *P341/EN/MD* for details.				
Fault Time	Data.			
Fault time and date.				
Active Group	Data.			
Active setting group 1-4.				
System Frequency	Data			
System frequency.				
Fault Duration				
Fault duration. Time from the start or trip until the undercurrent elements indicate the CB is open.				
CB Operate Time	Data.			
CB operating time. Time from protection trip to undercurrent elements indicating the CB is open.				
Relay Trip Time	Data.			
Relay trip time. Time from protection start to protection trip.				
The following cells provide measurement information of the fault: IA, IB, IC, VAB, VBC, VCA, VAN, VBN, VCN, VN Measured, VN Derived, I Sensitive, IREF Diff, IREF Bias, I2, V2, 3 Phase Watts, 3 Phase VARs, 3Ph Power Factor, CLIO Input 1-4. df/dt, DLR Ambient Temp, Wind Velocity, Wind Direction, Solar Radiation, DLR Ampacity, DLR CurrentRatio.				
Select Maint	0	0	9	1
Setting range from 0 to 9. This selects the required maintenance report from the possible 10 that may be stored. A value of 0 corresponds to the latest report and so on.				
Maint Text	Data.			
Up to 32 Character description of the occurrence. See Measurements and Recording chapter, *P341/EN MR* for details.				
Maint Type	Data.			
Maintenance record fault type. This will be a number defining the fault type.				
Maint Data	0	0	4	1
Error code associated with the failure found by the self monitoring. The Maint Type and Data cells are numbers representative of the occurrence. They form a specific error code which should be quoted in any related correspondence to Report Data.				
Reset Indication	No	No, Yes		N/A

Menu text	Default setting	Setting range		Step size
		Min.	Max.	
VIEW RECORDS				
Resets latched LEDs and latched relay contacts provided the relevant protection element has reset.				

Table 1 - Local viewing of records

For extraction from a remote source via communications, refer to the SCADA Communications chapter, where the procedure is fully explained.

Note	*A full list of all the event types and the meaning of their values is given in the Relay Menu Database document, P341/EN MD.*

2.1 Types of Event

An event may be a change of state of a control input or output relay, an alarm condition, setting change etc. The following sections show the various items that constitute an event:

2.1.1 Change of State of Opto-Isolated Inputs

If one or more of the opto (logic) inputs has changed state since the last time the protection algorithm ran, the new status is logged as an event. When this event is selected to be viewed on the LCD, three applicable cells will become visible as shown below:

Time & date of event
“LOGIC INPUTS”
“Event Value 0101010101010101”

The Event Value is an 8, 12, 16, or 24-bit word showing the status of the opto inputs, where the least significant bit (extreme right) corresponds to opto input 1 etc. The same information is present if the event is extracted and viewed via PC.

2.1.2 Change of State of One or more Output Relay Contacts

If one or more of the output relay contacts have changed state since the last time that the protection algorithm ran, then the new status is logged as an event. When this event is selected to be viewed on the LCD, three applicable cells will become visible as shown below:

Time & date of event
“OUTPUT CONTACTS”
“Event Value 01010101010101010101010”

The Event Value is a 7, 11, 12, 15, 16 or 20 bit word showing the status of the output contacts, where the least significant bit (extreme right) corresponds to output contact 1 etc. The same information is present if the event is extracted and viewed via PC.

2.1.3 Relay Alarm Conditions

Any alarm conditions generated by the relays will also be logged as individual events. **Table** 2 shows examples of some of the alarm conditions and how they appear in the event list:

Alarm condition	Resulting event	
	Event text	Event value
Alarm Status 1 (Alarms 1 - 32) (32 bits)		

Alarm condition	Resulting event	
	Event text	Event value
Setting Group Via Opto Invalid	Setting Grp Invalid ON/OFF	Bit position 2 in 32 bit field
Protection Disabled	Prot'n Disabled ON/OFF	Bit position 3 in 32 bit field
Frequency Out of Range	Freq out of Range ON/OFF	Bit position 13 in 32 bit field
VTS Alarm	VT Fail Alarm ON/OFF	Bit position 4 in 32 bit field
CB Trip Fail Protection	CB Fail ON/OFF	Bit position 6 in 32 bit field
Alarm Status 2 (Alarms 1 - 32) (32 bits)		
SR User Alarm 1 - 4 (Self Reset)	SR User Alarm 1 - 4 ON/OFF	Bit position 17 - 31 in 32 bit field
MR User Alarm 5 - 16 (Manual Reset)	MR User Alarm 5 - 16 ON/OFF	Bit position 16 - 27 in 32 bit field
Alarm Status 3 (Alarms 1 - 32) (32 bits)		
Battery Fail	Battery Fail ON/OFF	Bit position 0 in 32 bit field
Field Voltage Fail	Field V Fail ON/OFF	Bit position 1 in 32 bit field

Table 2 - Alarm conditions

Table 2 shows the abbreviated description that is given to the various alarm conditions and also a corresponding value between 0 and 31. This value is appended to each alarm event in a similar way as for the input and output events described previously. It is used by the event extraction software, such as S1 Studio, to identify the alarm and is therefore invisible if the event is viewed on the LCD. Either ON or OFF is shown after the description to signify whether the particular condition has become operated or has reset.

The User Alarms can be operated from an opto input or a control input using the PSL. They can be useful to give an alarm LED and message on the LCD display and an alarm indication via the communications of an external condition, for example trip circuit supervision alarm, rotor earth fault alarm. The menu text editor in S1 Studio can be used to edit the user alarm text to give a more meaningful description on the LCD display.

2.1.4 Protection Element Starts and Trips

Any operation of protection elements, (either a start or a trip condition) will be logged as an event record, consisting of a text string indicating the operated element and an event value. Again, this value is intended for use by the event extraction software, such as S1 Studio, rather than for the user, and is therefore invisible when the event is viewed on the LCD.

2.1.5 General Events

Several events come under the heading of General Events - an example is shown in Table 3:

Nature of event	Displayed text in event record	Displayed value
Level 1 password modified, either from user interface, front or rear port.	PW1 modified UI, F, R or R2	0 UI=6, F=11, R=16, R2=38

Table 3 - General events

A complete list of the 'General Events' are given in the Relay Menu Database, *P341/EN MD*.

2.1.6 Fault Records

Each time a fault record is generated, an event is also created. The event simply states that a fault record was generated, with a corresponding time stamp.

Note 1	*Viewing of the actual fault record is carried out in the Select Fault cell further down the VIEW RECORDS column, which is selectable from up to 5 records. These records consist of fault flags, fault location, fault measurements etc.*
Note 2	*The time stamp given in the fault record itself will be more accurate than the corresponding stamp given in the event record as the event is logged some time after the actual fault record is generated.*

The fault record is triggered from the **Fault REC. TRIG**. signal assigned in the default programmable scheme logic to relay 3, protection trip. The fault measurements in the fault record are given at the time of the protection start. The fault recorder does not stop recording until any start (DDB 992) or the any trip signals (DDB 674) resets to record all the protection flags during the fault.

It is recommended that the triggering contact (relay 3 for example) be 'self reset' and not latching. If a latching contact were chosen the fault record would not be generated until the contact had fully reset.

2.1.7 Maintenance Reports

Internal failures detected by the self-monitoring circuitry, such as watchdog failure or field voltage failure are logged into a maintenance report. The maintenance report holds up to ten such events and is accessed from the **Select Report** cell at the bottom of the **VIEW RECORDS** column.

Each entry consists of a self explanatory text string and a **Type** and **Data** cell, which are explained in the menu extract at the beginning of this section and in further detail in document *P341/EN MD*.

Each time a Maintenance Report is generated, an event is also created. The event simply states that a report was generated, with a corresponding time stamp.

2.1.8 Setting Changes

Changes to any setting within the relay are logged as an event. Two examples are shown in Table 4:

Type of setting change	Displayed text in event record	Displayed value
Control/Support Setting	C & S Changed	22
Group # Change	Group # Changed	# Where # = 1 to 4

Table 4 - Setting changes

Note:	*Control/Support settings are communications, measurement, CT/VT ratio settings etc, which are not duplicated within the four setting groups. When any of these settings are changed, the event record is created simultaneously. However, changes to protection or disturbance recorder settings will only generate an event once the settings have been confirmed at the 'setting trap'.*

2.2 Resetting of Event/Fault Records

To delete the event, fault or maintenance reports, use the **RECORD CONTROL** column.

2.3 Viewing Event Records via S1 Studio Support Software

When the event records are extracted and viewed on a PC they look slightly different than when viewed on the LCD. The following shows an example of how various events appear when displayed using S1 Studio:

Monday 08 January 2001 18:45:28.633 GMT V<1 Trip A/AB ON

Schneider Electric: MiCOM P341
Model Number: P341314B2M0360J
Address: 001 Column: 0F Row: 26
Event Type: Setting event
Event Value: 00000001000000000000000000000000

Monday 08 January 2001 18:45:28.634 GMT Output Contacts

Schneider Electric: MiCOM P341
Model Number: P341314B2M0360J
Address: 001 Column: 00 Row: 21
Event Type: Device output changed state
Event Value: 00000000001100
OFF 0 Output R1
OFF 1 Output R2
ON 2 Output R3
ON 3 Output R4
OFF 4 Output R5
OFF 5 Output R6
OFF 6 Output R7

Monday 08 January 2001 18:45:28.633 GMT Voltage Prot Alm ON

Schneider Electric: MiCOM P341
Model Number: P341314B2M0360J
Address: 001 Column: 00 Row: 22
Event Type: Alarm event
Event Value: 00001000000000000000000000000000
OFF 0 Not Used
OFF 1 Freq out of range
OFF 2 SG-opto Invalid
OFF 3 Prot'n Disabled
OFF 4 VT Fail Alarm
OFF 5 CT Fail Alarm
OFF 6 CB Fail Alarm
OFF 7 I^ Maint Alarm
OFF 8 I^ Maint Lockout
OFF 9 CB OPs Maint
OFF 10 CB OPs Lockout
OFF 11 CB Op Time Maint
OFF 12 CB Time Lockout
OFF 13 Fault Freq Lock
OFF 14 CB Status Alarm
OFF 15 CB Trip Fail
OFF 16 CB Close Fail
OFF 17 Man CB Unhealthy
OFF 18 F out of Range
OFF 19 Thermal Alarm
OFF 20 Not Used
OFF 21 Not Used
OFF 22 Not Used
OFF 23 Not Used
OFF 24 Not Used
OFF 25 Not Used

OFF 26 Not Used
ON 27 Freq Prot Alm
OFF 28 Voltage Prot Alm
OFF 29 Not Used
OFF 30 Not Used
OFF 31 Not Used

The first line gives the description and time stamp for the event, while the additional information displayed below may be collapsed via the +/– symbol.

For further information regarding events and their specific meaning, refer to relay menu database document, *P341/EN MD*. This is a standalone document not included in this manual.

2.4 Event Filtering

Event filtering can be disabled from all interfaces that supports setting changes. The settings that control the various types of events are in the record control column. The effect of setting each to disabled is shown in **Table** 5:

Menu text	Default setting	Available settings
RECORD CONTROL		
Clear Events	No	No or Yes
Selecting **Yes** will cause the existing event log to be cleared and an event will be generated indicating that the events have been erased.		
Clear Faults	No	No or Yes
Selecting **Yes** will cause the existing fault records to be erased from the relay.		
Clear Maint.	No	No or Yes
Selecting Yes will cause the existing maintenance records to be erased from the relay.		
Alarm Event	Enabled	Enabled or Disabled
Disabling this setting means that no event will be generated for all alarms.		
Relay O/P Event	Enabled	Enabled or Disabled
Disabling this setting means that no event will be generated for any change in relay output contact state.		
Opto Input Event	Enabled	Enabled or Disabled
Disabling this setting means that no event will be generated for any change in logic input state.		
General Event	Enabled	Enabled or Disabled
Disabling this setting means that no General Events will be generated. See event record sheet in the Relay Menu Database document, *P341/EN MD* for list of general events.		
Fault Rec Event	Enabled	Enabled or Disabled
Disabling this setting means that no event will be generated for any fault that produces a fault record.		
Maint. Rec Event	Enabled	Enabled or Disabled
Disabling this setting means that no event will be generated for any maintenance records.		
Protection Event	Enabled	Enabled or Disabled
Disabling this setting means that no event will be generated for any operation of the protection elements.		
DDB 31 - 0	11111111111111111111111111111111	
32 bit setting to enable or disable the event recording for DDBs 0-31. For each bit 1 = event recording Enabled, 0 = event recording Disabled.		
DDB 2047 - 2016	11111111111111111111111111111111	
32 bit setting to enable or disable the event recording for DDBs 2047 - 2016. For each bit 1 = event recording Enabled, 0 = event recording Disabled. There are similar cells showing 32 bit binary strings for all DDBs from 0 – 2047. The first and last 32 bit binary strings only are shown here.		

Table 5 - Record control settings

Note	*Some occurrences result in more than one type of event, for example a battery failure will produce an alarm event and a maintenance record event.*

If the Protection Event setting is Enabled a further set of settings is revealed which allow the event generation by individual DDB signals to be enabled or disabled.

For further information regarding events and their specific meaning, refer to Relay Menu Database document, *P341/EN MD*.

3 DISTURBANCE RECORDER

The integral disturbance recorder has an area of memory specifically set aside for record storage. The number of records that may be stored by the relay is dependent upon the selected recording. The relay can typically store a minimum of 50 records, each of 1.5 seconds duration (8 analogue channels and 32 digital channels). VDEW relays, however, have the same total record length but the VDEW protocol dictates that only 8 records can be extracted via the rear port. Disturbance records continue to be recorded until the available memory is exhausted, at which time the oldest record(s) are overwritten to make space for the newest one.

The recorder stores actual samples that are taken at a rate of 24 samples per cycle.

Each disturbance record consists of a maximum of 8 analog data channels for P341 and thirty-two digital data channels. The relevant CT and VT ratios for the analog channels are also extracted to enable scaling to primary quantities.

Note	*If a CT ratio is set less than unity, the relay will choose a scaling factor of zero for the appropriate channel.*

The DISTURBANCE RECORDER menu column is shown in **Table** 6:

Menu text	Default setting	Setting range		Step size
		Min.	Max.	
DISTURB RECORDER				
Duration	1.5 s	0.1 s	10.5 s	0.01 s
Overall recording time setting.				
Trigger Position	33.3%	0	100%	0.1%
Trigger point setting as a percentage of the duration. For example, the default settings show that the overall recording time is set to 1.5 s with the trigger point being at 33.3% of this, giving 0.5 s pre-fault and 1 s post fault recording times.				
Trigger Mode	Single	Single or Extended		
If set to **single** and if a further trigger occurs while a recording is taking place, the recorder will ignore the trigger. However, if this has been set to **Extended**, the post trigger timer will be reset to zero, thereby extending the recording time.				
Analog. Channel 1	VA	Unused, VA, VB, VC, VN, IA, IB, IC, I Sensitive, Frequency, C/S voltage		
Selects any available analog input to be assigned to this channel.				
Analog. Channel 2	VB	As above		
Analog. Channel 3	VC	As above		
Analog. Channel 4	VN1	As above		
Analog. Channel 5	IA-1	As above		
Analog. Channel 5	IB-1	As above		
Analog. Channel 6	IC-1	As above		
Analog. Channel 7	I Sensitive	As above		
Analog. Channel 8	IN	As above		
Digital Inputs 1 to 32	Relays 1 to 24 and Opto's 1 to 24	Any of O/P Contacts or Any of Opto Inputs or Internal Digital Signals		
The digital channels may be mapped to any of the opto isolated inputs or output contacts, in addition to a number of internal relay digital signals, such as protection starts, LEDs etc.				
Inputs 1 to 32 Trigger	No Trigger except Dedicated Trip Relay O/P's which are set to Trigger L/H	No Trigger, Trigger L/H, Trigger H/L		

Menu text	Default setting	Setting range		Step size
		Min.	Max.	
DISTURB RECORDER				
Any of the digital channels may be selected to trigger the disturbance recorder on either a low to high (L/H) or a high to low (H/L) transition.				

Table 6 - Disturbance recorder settings

The pre and post fault recording times are set by a combination of the **Duration** and **Trigger Position** cells. **Duration** sets the overall recording time and the **Trigger Position** sets the trigger point as a percentage of the duration. For example, the default settings show that the overall recording time is set to 1.5 s with the trigger point being at 33.3% of this, giving 0.5 s pre-fault and 1 s post fault recording times.

If a further trigger occurs while a recording is taking place, the recorder ignores the trigger if the **Trigger Mode** has been set to **Single**. However, if this has been set to **Extended**, the post trigger timer will be reset to zero, thereby extending the recording time.

As can be seen from the menu, each of the analog channels is selectable from the available analog inputs to the relay. The digital channels may be mapped to any of the opto isolated inputs or output contacts, in addition to a number of internal relay digital signals, such as protection starts, LEDs etc. The complete list of these signals may be found by viewing the available settings in the relay menu or via a setting file in S1 Studio. Any of the digital channels may be selected to trigger the disturbance recorder on either a low to high or a high to low transition, via the **Input Trigger** cell. The default trigger settings are that any dedicated trip output contacts (e.g. relay 3) will trigger the recorder.

It is not possible to view the disturbance records locally via the LCD; they must be extracted using suitable software such as S1 Studio. This process is fully explained in the SCADA Communications chapter.

4 MEASUREMENTS

The relay produces a variety of both directly measured and calculated power system quantities. These measurement values are updated on a per second basis and can be viewed in the **Measurements** columns (up to three) of the relay or via S1 Studio Measurement viewer. The P341 relay is able to measure and display the following quantities as summarized.

- Phase Voltages and Currents
- Phase to Phase Voltage and Currents
- Sequence Voltages and Currents
- Slip Frequency
- Power and Energy Quantities
- Rms. Voltages and Currents
- Peak, Fixed and Rolling Demand Values

There are also measured values from the protection functions, which are also displayed under the measurement columns of the menu; these are described in the section on the relevant protection function.

4.1 Measured Voltages and Currents

The relay produces both phase to ground and phase to phase voltage and current values. They are produced directly from the Discrete Fourier Transform (DFT) used by the relay protection functions and present both magnitude and phase angle measurement.

4.2 Sequence Voltages and Currents

Sequence quantities are produced by the relay from the measured Fourier values; these are displayed as magnitude and phase angle values.

4.3 Slip Frequency

The relay produces a slip frequency measurement by measuring the rate of change of phase angle, between the bus and line voltages, over a one-cycle period. The slip frequency measurement assumes the bus voltage to be the reference phasor.

4.4 Power and Energy Quantities

Using the measured voltages and currents the relay calculates the apparent, real and reactive power quantities. These are produced on a phase by phase. Three-phase values based on the sum of the three individual phase values. The signing of the real and reactive power measurements can be controlled using the measurement mode setting. The four options are defined in Table 7.

Measurement mode	Parameter	Signing
0 (Default)	Export Power (Watts) Import Power (Watts) Lagging VArs (Import VArs) Leading Vars (Export Vars)	+ – + –

Measurement mode	Parameter	Signing
1	Export Power (Watts) Import Power (Watts) Lagging VArs (Import VArs) Leading Vars (Export Vars)	– + + –
2	Export Power (Watts) Import Power (Watts) Lagging VArs (Import VArs) Leading Vars (Export Vars)	+ – – +
3	Export Power (Watts) Import Power (Watts) Lagging VArs (Import VArs) Leading Vars (Export Vars)	– + – +

Table 7 - Power modes

In addition to the measured power quantities, the relay calculates the power factor phase by phase, in addition to a three-phase power factor.

These power values are also used to increment the total real and reactive energy measurements. Separate energy measurements are maintained for the total exported and imported energy. The energy measurements are incremented up to maximum values of 1000 GWhr or 1000 GVArhr at which point they will reset to zero, it is also possible to reset these values using the menu or remote interfaces using the **Reset Demand** cell.

For the energy measurements exporting Watts/VArs gives forward Whr/VArhr and importing Watts/VArs gives reverse Whr/VArhr.

4.5 Rms. Voltages and Currents

Rms. phase voltage and current values are calculated by the relay using the sum of the samples squared over a cycle of sampled data.

4.6 Demand Values

The relay produces fixed, rolling and peak demand values. Using the reset demand menu cell it is possible to reset these quantities via the user interface or the remote communications.

Fixed Demand Values

The fixed demand value is the average value of a quantity over the specified interval; values are produced for each phase current and for three phase real and reactive power. The fixed demand values displayed by the relay are those for the previous interval, the values are updated at the end of the fixed demand period.

Rolling Demand Values

The rolling demand values are similar to the fixed demand values, the difference being that a sliding window is used. The rolling demand window consists of a number of smaller sub-periods. The resolution of the sliding window is the sub-period length, with the displayed values being updated at the end of each of the sub-periods.

Peak Demand Values

Peak demand values are produced for each phase current and the real and reactive power quantities. These display the maximum value of the measured quantity since the last reset of the demand values.

4.7 Settings

The following settings under the heading **MEASUREMENT SET-UP** can be used to configure the relay measurement function.

Menu text	Default settings	Available settings
MEASURE'T SETUP		
Default Display	Description	Description/Plant Reference/ Frequency/Access Level/3Ph + N Current/3Ph Voltage/Power/Date and Time
This setting can be used to select the default display from a range of options, note that it is also possible to view the other default displays whilst at the default level using the ⟨ and ⟩ keys. However once the 15 minute timeout elapses the default display will revert to that selected by this setting.		
Local Values	Primary	Primary/Secondary
This setting controls whether measured values via the front panel user interface and the front courier port are displayed as primary or secondary quantities.		
Remote Values	Primary	Primary/Secondary
This setting controls whether measured values via the rear communication port are displayed as primary or secondary quantities.		
Measurement Ref.	VA	VA/VB/VC/IA/IB/IC
Using this setting the phase reference for all angular measurements by the relay can be selected.		
Measurement Mode	0	0 to 3 step 1
This setting is used to control the signing of the real and reactive power quantities; the signing convention used is defined in the Measurements and Recording chapter, *P341/EN MR.*		
Fix Dem Period	30 minutes	1 to 99 minutes step 1 minute
This setting defines the length of the fixed demand window.		
Roll Sub Period	30 minutes	1 to 99 minutes step 1 minute
The rolling demand uses a sliding/rolling window. The rolling demand window consists of a number of smaller sub periods (Num Sub Periods). The resolution of the rolling window is the sub period length (Roll Sub Period) with the displayed values being updated at the end of each sub period.		
Num Sub Periods	1	1 to 15 step 1
This setting is used to set the number of rolling demand sub periods.		
Remote 2 Values	Primary	Primary/Secondary
This setting controls whether measured values via the 2nd rear communication port are displayed as primary or secondary quantities.		

Table 8 - Measurement setup settings

4.8 Measurement Display Quantities

The relay has three Measurement columns for viewing of measurement quantities. These can also be viewed with S1 Studio and are shown below:

4.8.1 Measurements 1

Menu text	Default setting	Setting range		Step size
		Min.	Max.	
MEASUREMENTS 1				
IA Magnitude	Data.			
IA Phase Angle	Data.			
IB Magnitude	Data.			
IB Phase Angle	Data.			

Menu text	Default setting	Setting range		Step size
		Min.	Max.	
MEASUREMENTS 1				
IC Magnitude	Data.			
IC Phase Angle	Data.			
IN Derived Mag	Data. IN = IA+IB+IC.			
IN Derived Angle	Data.			
I Sen Magnitude	Data.			
I Sen Angle	Data.			
I1 Magnitude	Data. Positive sequence current.			
I2 magnitude	Data. Negative sequence current.			
I0 Magnitude	Data. Zero sequence current.			
IA RMS	Data.			
IB RMS	Data.			
IC RMS	Data.			
VAB Magnitude	Data.			
VAB Phase Angle	Data.			
VBC Magnitude	Data.			
VBC Phase Angle	Data.			
VCA Magnitude	Data.			
VCA Phase Angle	Data.			
VAN Magnitude	Data.			
VAN Phase Angle	Data.			
VBN Magnitude	Data.			
VBN Phase Angle	Data.			
VCN Magnitude	Data.			
VCN Phase Angle	Data.			
VN Measured Mag	Data. VN.			
VN Measured Ang	Data. VN.			
VN Derived Mag	Data. VN = VA+VB+VC.			
V1 Magnitude	Data. Positive sequence voltage.			
V2 Magnitude	Data. Negative sequence voltage.			
V0 Magnitude	Data. Zero sequence voltage.			
VAN RMS	Data.			
VBN RMS	Data.			
VCN RMS	Data.			
Frequency	Data.			
I1 Magnitude	Data. Positive sequence current.			
I1 Phase Angle				
I2 Magnitude	Data. Negative sequence current			
I2 Phase Angle	Data.			
I0 Magnitude	Data. Zero sequence current.			
I0 Phase Angle	Data.			
V1 Magnitude	Data. Positive sequence voltage.			
V1 Phase Angle				

Menu text	Default setting	Setting range		Step size
		Min.	Max.	
MEASUREMENTS 1				
V2 Magnitude	Data. Negative sequence voltage.			
V2 Phase Angle	Data.			
V0 Magnitude	Data. Zero sequence voltage.			
V0 Phase Angle	Data.			
C/S Voltage Mag	Data.			
C/S Voltage Ang	Data.			
CS Gen-Bus Volt	Data.			
CS Gen-Bus Angle	Data.			
Slip Frequency	Data.			
CS Frequency	Data.			

Table 9 - Measurements 1

4.8.2 Measurements 2

Menu text	Default setting	Setting range		Step size
		Min.	Max.	
MEASUREMENTS 2				
A Phase Watts	Data.			
B Phase Watts	Data.			
C Phase Watts	Data.			
A Phase VARs	Data.			
B Phase VARs	Data.			
C Phase VARs	Data.			
A Phase VA	Data.			
B Phase VA	Data.			
C Phase VA	Data.			
3 Phase Watts	Data.			
3 Phase VARs	Data.			
3 Phase VA	Data.			
3Ph Power Factor	Data.			
APh Power Factor	Data.			
BPh Power Factor	Data.			
CPh Power Factor	Data.			
3Ph WHours Fwd	Data.			
3Ph WHours Rev	Data.			
3Ph VArHours Fwd	Data.			
3Ph VArHours Rev	Data.			
3Ph W Fix Demand	Data.			
3Ph VAr Fix Demand	Data.			
IA Fixed Demand	Data.			
IB Fixed Demand	Data.			
IC Fixed Demand	Data.			

Menu text	Default setting	Setting range		Step size
		Min.	Max.	
MEASUREMENTS 2				
3Ph W Roll Demand	Data.			
3Ph VAr Roll Demand	Data.			
IA Roll Demand	Data.			
IB Roll Demand	Data.			
IC Roll Demand	Data.			
3Ph W Peak Demand	Data.			
3Ph VAr Peak Demand	Data.			
IA Peak Demand	Data.			
IB Peak Demand	Data.			
IC Peak Demand	Data.			
Reset Demand	No	No, Yes		N/A
Reset demand measurements command. Can be used to reset the fixed, rolling and peak demand value measurements to 0.				

Table 10 - Measurements 2

4.8.3 Measurements 3

Menu text	Default setting	Setting range		Step size
		Min.	Max.	
MEASUREMENTS 3				
APh Sen Watts	Data.			
APh Sen VArs	Data.			
APh Power Angle	Data.			
Thermal Overload	Data. Thermal state.			
Reset Thermal O/L	No	No, Yes		N/A
CLIO Input 1	Data. Current loop (transducer) input 1.			
CLIO Input 2	Data. Current loop (transducer) input 2.			
CLIO Input 3	Data. Current loop (transducer) input 3.			
CLIO Input 4	Data. Current loop (transducer) input 4.			
df/dt	Data.			

Table 11 - Measurements 3

4.8.4 Measurements 4

Menu text	Default setting	Setting range		Step size
		Min.	Max.	
MEASUREMENTS 4				
Max Iac	Data. Maximum phase current. (P341 7x)			
DLR Ambient Temp	Data. Ambient Temperature from current loop input. (P341 7x)			
Wind Velocity	Data. Wind Velocity from current loop input. (P341 7x)			
Wind Direction	Data. Wind Direction from current loop input. (P341 7x)			
Solar Radiation	Data. Solar Radiation from current loop input. (P341 7x)			

Menu text	Default setting	Setting range		Step size
		Min.	Max.	
MEASUREMENTS 4				
Effct wind angle	Data. Effective Wind Angle. Intermediate parameter calculated when calculating the convective cooling Pc. (P341 7x)			
Pc	Data. Convective cooling, takes the maximum value of ‘Pc, natural’, ‘Pc1, forced’, and ‘Pc2, forced’. (P341 7x)			
Pc, natural	Data. Natural convective cooling, an intermediate value changed according to the selected standard (CIGRE or IEEE). (P341 7x)			
Pc1, forced	Data. Forced convective cooling at low wind speed, an intermediate value changed according to the selected standard (CIGRE or IEEE). (P341 7x)			
Pc2, forced	Data. Forced convective cooling at high wind speed, an intermediate value changed according to the selected standard (CIGRE or IEEE). (P341 7x)			
DLR Ampacity	Data. Calculated ampacity (Amps). (P341 7x)			
DLR CurrentRatio	Data. Ratio of the maximum phase current and the calculated ampacity as a percentage. (P341 7x)			
Dyn Conduct Temp	Data. Real Time/Dynamic conductor temperature. (P341 7x)			
Steady Conduct T	Data. Steady State conductor temperature. (P341 7x)			
Time Constant	Data. Conductor thermal time constant. (P341 7x)			

Table 12 - Measurements 4

FIRMWARE DESIGN

CHAPTER 9

Date:	February 2012
Hardware Suffix:	J (P341)
Software Version:	36 & 71 (with DLR)
Connection Diagrams:	10P341xx (xx = 01 to 12)

CONTENTS

FIGURES

TABLES

1 RELAY SYSTEM OVERVIEW

1.1 Hardware Overview

The relay hardware is made up of several modules from a standard range. Some modules are essential while others are optional depending on the user's requirements.

The different modules that can be present in the relay are as follows:

1.1.1 Processor Board

The processor board performs all calculations for the relay and controls the operation of all other modules in the relay. The processor board also contains and controls the user interfaces (LCD, LEDs, keypad and communication interfaces).

1.1.2 Input Module

The input module converts the data in the analog and digital input signals into a format suitable for processing by the processor board. The standard input module consists of two boards: a transformer board to provide electrical isolation and a main input board which provides analog to digital conversion and the isolated digital inputs.

1.1.3 Power Supply Module

The power supply module provides power to all of the other modules in the relay, at three different voltage levels. It also provides the EIA(RS)485 electrical connection for the rear communication port. The second board the power supply module contains the relays that provide the output contacts.

1.1.4 IRIG-B Modulated or Unmodulated Board (Optional)

This board, which is optional, can be used where an IRIG-B signal is available to provide an accurate time reference for the relay. There is also an option on this board to specify a fiber optic or Ethernet rear communication port.

All modules are connected by a parallel data and address bus that allows the processor board to send and receive information to and from the other modules as required. There is also a separate serial data bus for conveying sample data from the input module to the processor. Figure 1 shows the modules of the relay and the flow of information between them.

1.1.5 Second rear comms. Board

The optional second rear port is designed typically for dial-up modem access by protection engineers and operators, when the main port is reserved for SCADA traffic. Communication is through one of three physical links; K-Bus, EIA(RS)485 or EIA(RS)232. The port supports full local or remote protection and control access by S1 Studio software. The second rear port is also available with an on board IRIG-B input.

1.1.6 Ethernet Board

This is a mandatory board for IEC 61850 enabled relays. It provides network connectivity through either a single Ethernet port: copper or fiber media at rates of 10 Mb/s (copper only) or 100 Mb/s or a 100 Mb/s fiber redundant Ethernet port. There is also an option on this board to specify IRIG-B port (modulated or un-modulated). This single/redundant port Ethernet board, the IRIG-B board mentioned in section 1.1.4 and second rear

comms board mentioned in section 1.1.5 are mutually exclusive as they all utilize slot A within the relay case.

All modules are connected by a parallel data and address bus which allows the processor board to send and receive information to and from the other modules as required.

There is also a separate serial data bus for conveying sample data from the input module to the processor. Figure 1 shows the modules of the relay and the flow of information between them.

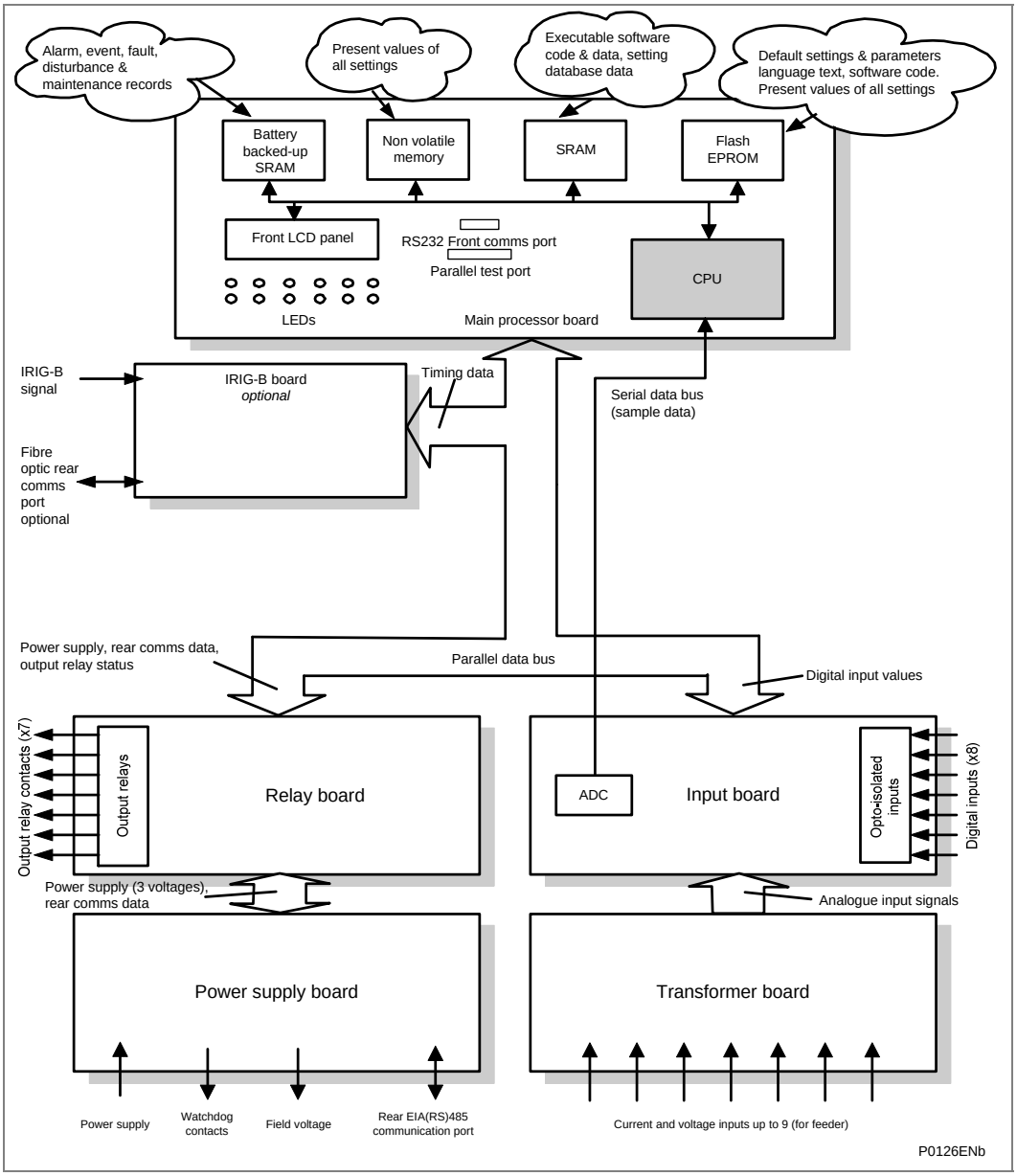

Figure 1 - Relay modules and information flow

1.2 Software Overview

The software for the relay can be split into four elements; the real-time operating system, the system services software, the platform software and the protection and control software. These four elements are not distinguishable to the user, and are all processed by the same processor board. The distinction between the four parts of the software is explained in the following sections.

1.2.1 Real-Time Operating System

The real time operating system provides a framework for the different parts of the relay's software to operate in. The software is split into tasks. The real-time operating system schedules the processing of these tasks so that they are carried out at the correct time and in the correct priority. The operating system also exchanges of information between tasks in the form of messages.

1.2.2 System Services Software

The system services software provides the low-level control of the relay hardware. For example, the system services software controls the boot of the relay's software from the non-volatile flash EPROM memory at power-on, and provides driver software for the user interface through the LCD and keypad, and through the serial communication ports. The system services software provides an interface layer between the control of the relay's hardware and the rest of the relay software.

1.2.3 Platform Software

The platform software deals with the management of the relay settings, the user interfaces and logging of event, alarm, fault and maintenance records. All of the relay settings are stored in a database in the relay. This database is directly compatible with Courier communications. For all other interfaces (such as the front panel keypad and LCD interface, MODBUS, IEC 60870-5-103, IEC 61850 and DNP3.0) the platform software converts the information from the database into the format required. The platform software notifies the protection & control software of all settings changes and logs data as specified by the protection & control software.

1.2.4 Protection & Control Software

The protection and control software performs the calculations for all of the protection algorithms of the relay. This includes digital signal processing such as Fourier filtering and ancillary tasks such as the disturbance recorder. The protection & control software interfaces with the platform software for settings changes and logging of records, and with the system services software for acquisition of sample data and access to output relays and digital opto-isolated inputs.

1.2.5 Disturbance Recorder

The analog values and logic signals are routed from the protection and control software to the disturbance recorder software. The platform software interfaces to the disturbance recorder to allow the stored records extracted.

2 HARDWARE MODULES

The relay is based on a modular hardware design where each module performs a separate function. This section describes the functional operation of the various hardware modules.

2.1 Processor Board

The relay is based around a TMS320VC33-150 MHz (peak speed), floating point, 32-bit digital signal processor (DSP) operating at a clock frequency of half this speed. This processor performs all of the calculations for the relay, including the protection functions, control of the data communication and user interfaces including the operation of the LCD, keypad and LEDs.

The processor board is located directly behind the relay's front panel that allows the LCD and LEDs to be mounted on the processor board along with the front panel communication ports. These comprise the 9-pin D-connector for EIA(RS)232 serial communications (e.g. using S1 Studio and Courier communications) and the 25-pin D-connector relay test port for parallel communication. All serial communication is handled using a field programmable gate array (FPGA).

The memory provided on the main processor board is split into two categories, volatile and non-volatile; the volatile memory is fast access (zero wait state) SRAM which is used for the storage and execution of the processor software, and data storage as required during the processor's calculations. The non-volatile memory is sub-divided into 3 groups; 4 MB of flash memory for non-volatile storage of software code and text, together with default settings; 4 MB of battery backed-up SRAM for the storage of disturbance, event, fault and maintenance record data; and 64 kB of E2PROM memory for the storage of configuration data, including the present setting values.

2.2 Internal Communication Buses

The relay has two internal buses for the communication of data between different modules. The main bus is a parallel link that is part of a 64-way ribbon cable. The ribbon cable carries the data and address bus signals in addition to control signals and all power supply lines. Operation of the bus is driven by the main processor board that operates as a master while all other modules within the relay are slaves.

The second bus is a serial link that is used exclusively for communicating the digital sample values from the input module to the main processor board. The DSP processor has a built-in serial port that is used to read the sample data from the serial bus. The serial bus is also carried on the 64-way ribbon cable.

2.3 Input Module

The input module provides the interface between the relay processor board(s) and the analog and digital signals coming into the relay. The input module of P341 (40TE case) consists of two PCBs; the main input board and the transformer board. The P341 relay (40TE case) provides four voltage inputs and four current inputs. The P341 (60TE case) input module contains an additional transformer board providing an additional voltage input.

2.3.1 Transformer Board

The transformer board holds up to four voltage transformers (VTs) and five Current Transformers (CTs). The current inputs accept either 1 A or 5 A nominal current (menu and wiring options) and the voltage inputs can be specified for either 110 V or 440 V nominal voltage (order option). The transformers are used both to step-down the

currents and voltages to levels appropriate to the relay's electronic circuitry and to provide effective isolation between the relay and the power system. The connection arrangements of both the current and voltage transformer secondaries provide differential input signals to the main input board to reduce noise.

2.3.2 Input Board

The main input board is shown as a block diagram in Figure 2. It provides the circuitry for the digital input signals and the analog-to-digital conversion for the analog signals. It takes the differential analog signals from the CTs and VTs on the transformer board(s), converts these to digital samples and transmits the samples to the main processor board through the serial data bus. On the input board the analog signals are passed through an anti-alias filter before being multiplexed into a single analog to digital converter chip. The A-D converter provides 16-bit resolution and a serial data stream output. The digital input signals are opto isolated on this board to prevent excessive voltages on these inputs causing damage to the relay's internal circuitry.

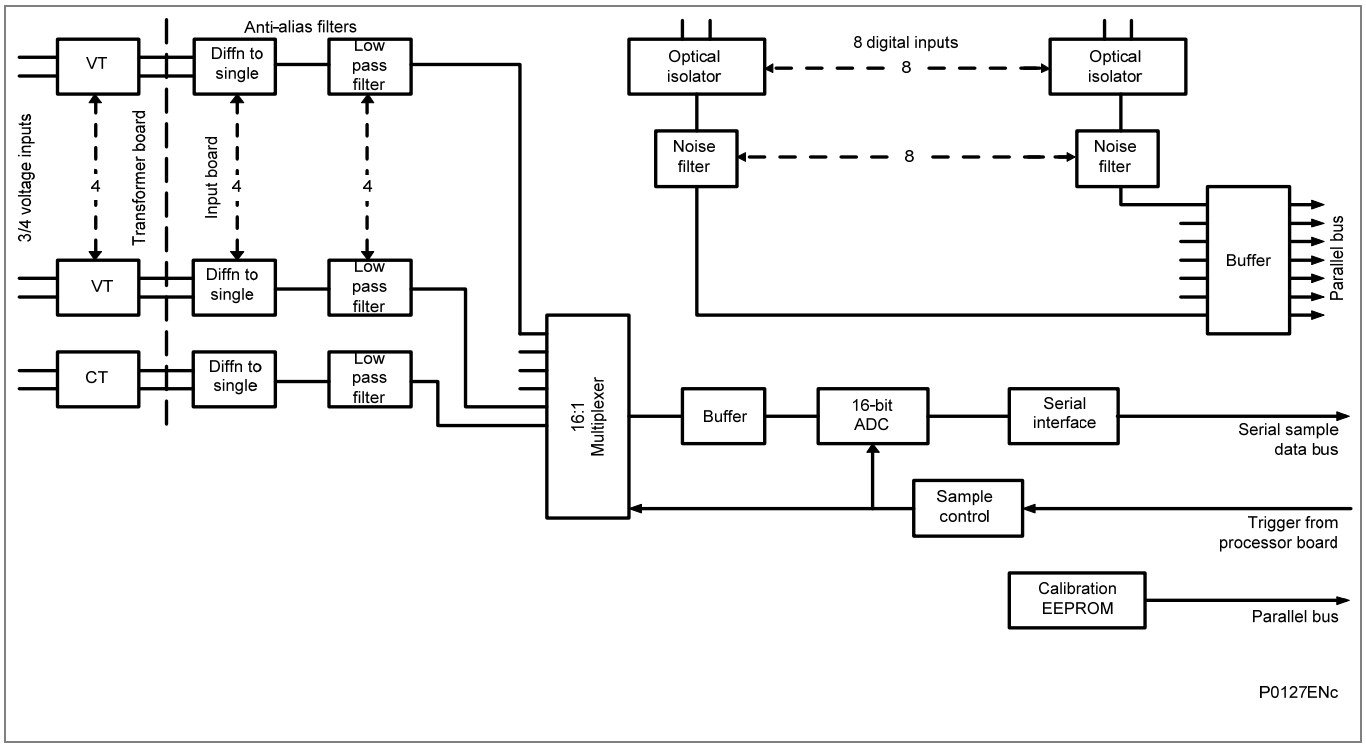

Figure 2: Main input board

The signal multiplexing allows 16 analog channels to be sampled with up to nine current inputs and four voltage inputs. The three spare channels are used to sample three different reference voltages for continually checking the multiplexer operation and the A-D converter accuracy. The sample rate is maintained at 24 samples per cycle of the power waveform by a logic control circuit that is driven by the frequency tracking function on the main processor board. The calibration non-volatile memory holds the calibration coefficients that are used by the processor board to correct for any amplitude or phase error introduced by the transformers and analog circuitry.

The other function of the input board is to read the signals present on the digital inputs and present this to the parallel data bus for processing. The input board holds eight optical isolators for the connection of up to eight digital input signals. The opto-isolators are used with the digital signals for the same reason as the transformers with the analog signals; to isolate the relay's electronics from the power system environment. A 48 V 'field voltage' supply is provided at the back of the relay for use in driving the digital opto-inputs. The input board provides some hardware filtering of the digital signals to remove

unwanted noise before buffering the signals for reading on the parallel data bus. Depending on the relay model, more than 8 digital input signals can be accepted by the relay. This is achieved by the use of an additional opto-board that contains the same provision for 8 isolated digital inputs as the main input board, but does not contain any of the circuits for analog signals which are provided on the main input board.

2.3.3 Universal Opto Isolated Logic Inputs

The P34x series relays have universal opto isolated logic inputs that can be programmed for the nominal battery voltage of the circuit of which they are a part. This allows different voltages for different circuits such as signaling and tripping. From software version 30 onwards they can also be programmed as Standard 60% - 80% or 50% - 70% to satisfy different operating constraints.

Threshold levels are as follows:

Nominal battery voltage (Vdc)	Standard 60% - 80%		50% - 70%	
	No operation (logic 0) Vdc	Operation (logic 1) Vdc	No operation (logic 0) Vdc	Operation (logic 1) Vdc
24/27	<16.2	>19.2	<12.0	>16.8
30/34	<20.4	>24.0	<15.0	>21.0
48/54	<32.4	>38.4	<24.0	>33.6
110/125	<75.0	>88.0	<55.0	>77.0
220/250	<150.0	>176.0	<110	>154

Table 1 - Threshold levels

This lower value eliminates fleeting pick-ups that may occur during a battery earth fault, when stray capacitance may present up to 50% of battery voltage across an input.

Each input also has selectable filtering. This allows use of a pre-set filter of ½ cycle which renders the input immune to induced noise on the wiring: although this method is secure it can be slow, particularly for intertripping. This can be improved by switching off the ½ cycle filter in which case one of the following methods to reduce ac noise should be considered. The first method is to use double pole switching on the input, the second is to use screened twisted cable on the input circuit.

2.4 Power Supply Module (including Output Relays)

The power supply module contains two boards, one for the power supply unit itself and the other for the output relays. The power supply board also contains the input and output hardware for the rear communication port which provides an EIA(RS)485 communication interface.

2.4.1 Power Supply Board (including EIA(RS)485 Communication Interface)

One of three different configurations of the power supply board can be fitted to the relay. This will be specified at the time of order and depends on the nature of the supply voltage that will be connected to the relay. The three options are shown in Table 2

Nominal dc range	Nominal ac range
24/48 V	DC only
48/110 V	30/100 Vrms
110/250 V	100/240 Vrms

Table 2 - Power supply options

The output from all versions of the power supply module are used to provide isolated power supply rails to all of the other modules within the relay. Three voltage levels are used in the relay: 5.1 V for all of the digital circuits, ±16 V for the analog electronics such as on the input board, and 22 V for driving the output relay coils and the RTD board if fitted. All power supply voltages including the 0 V earth line are distributed around the relay through the 64-way ribbon cable. The power supply board also provides the 48 V field voltage. This is brought out to terminals on the back of the relay so that it can be used to drive the optically- isolated digital inputs.

The two other functions provided by the power supply board are the EIA(RS)485 communications interface and the watchdog contacts for the relay. The EIA(RS)485 interface is used with the relay's rear communication port to provide communication using one of either Courier, MODBUS, or IEC 60870-5-103, or DNP3.0 protocols. The EIA(RS)485 hardware supports half-duplex communication and provides optical isolation of the serial data being transmitted and received. All internal communication of data from the power supply board is conducted through the output relay board that is connected to the parallel bus.

The watchdog facility provides two output relay contacts, one normally open and one normally. These are driven by the main processor board and indicate that the relay is in a healthy state.

The power supply board incorporates inrush current limiting. This limits the peak inrush current, during energization, to approximately 10A.

2.4.2 Output Relay Board

There are two versions of the output relay board one with seven relays, three normally open contacts and four changeover contacts and one with eight relays, six normally open contacts and two changeover contacts.

For relay models with suffix A hardware, only the seven output relay boards were available. For equivalent relay models in suffix B hardware or greater the base numbers of output contacts, using the seven output relay boards, is being maintained for compatibility. The eight output relay board is only used for new relay models or existing relay models available in new case sizes or to provide additional output contacts to existing models for suffix issue B or greater hardware.

Note	*The model number suffix letter refers to the hardware version.*

The relays are driven from the 22 V power supply line. The relays' state is written to or read from using the parallel data bus. Depending on the relay model, more than seven output contacts may be provided, through the use of up to three extra relay boards. Each additional relay board provides a further seven or eight output relays.

2.4.3 High Break Relay Board

One 'high break' output relay board consisting of four normally open output contacts is available in the P341 as an option.

This board contains a hybrid of MOSFET solid state devices (SSD) in parallel with high capacity relay output contacts. The MOSFET has a varistor across it to provide protection which is required when switching off inductive loads as the stored energy in the inductor causes a reverse high voltage which could damage the MOSFET.

When there is a control input command to operate an output contact the miniature relay is operated at the same time as the SSD. The miniature relay contact closes in nominally 3.5 mS and is used to carry the continuous load current; the SSD operates in <0.2 ms and is switched off after 7.5 mS. When the control input resets to open the contacts, the SSD is again turned on for 7.5 mS. The miniature relay resets in nominally 3.5 ms before the SSD and so the SSD is used to break the load. The SSD absorbs the energy when

breaking inductive loads and so limits the resulting voltage surge. This contact arrangement is for switching dc circuits only. As the SSD comes on very fast (<0.2 ms) then these high break output contacts have the added advantage of being very fast operating.

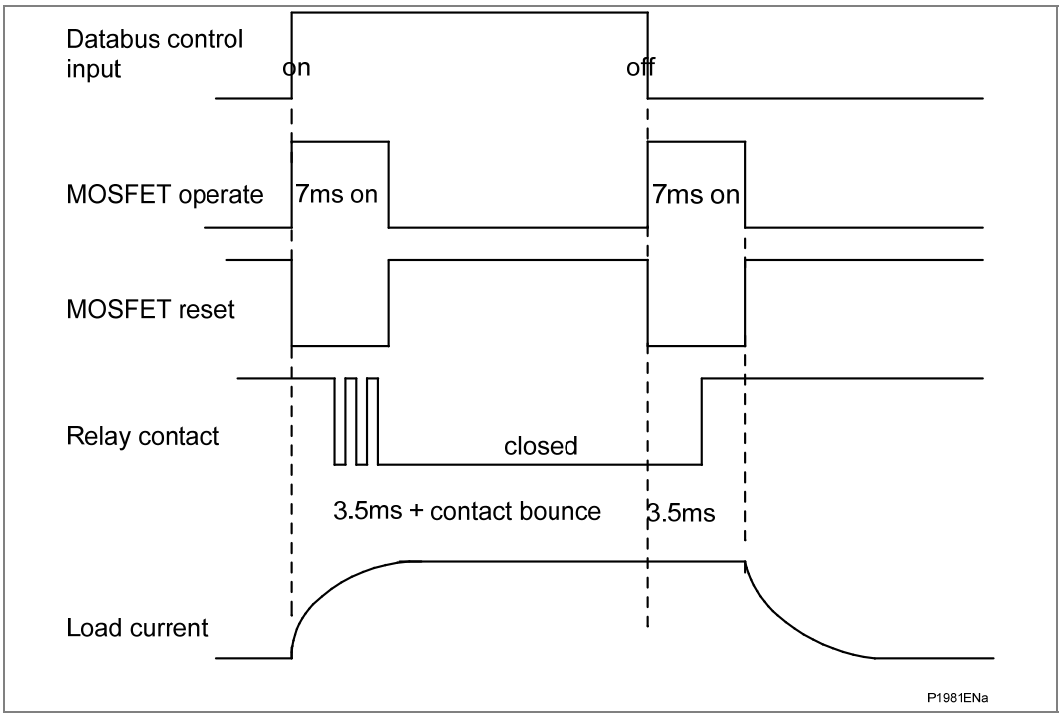

Figure 3 - High break contact operation

2.4.3.1 High Break Contact Applications

1. Efficient Scheme Engineering

   In traditional hardwired scheme designs, high break capability could only be achieved using external electromechanical trip relays. External MVAJ tripping relays can be used or the new high break contacts inside Schneider Electric relays can be used, reducing panel space.

2. Accessibility of CB Auxiliary Contacts

   Common practice is to use circuit breaker 52a (CB Closed) auxiliary contacts to break the trip coil current on breaker opening, therefore easing the duty on the protection contacts. In cases such as operation of disconnectors, or retrofitting, it may be that 52a contacts are either unavailable or unreliable. High break contacts can be used to break the trip coil current in these applications.

3. Breaker Fail

   The technique to use 52a contacts in trip circuits was described above. However, in the event of failure of the local circuit breaker (stuck breaker), or defective auxiliary contacts (stuck contacts), the 52a contact action is incorrect. The interrupting duty at the local breaker then falls on the relay output contacts which may not be rated to perform this duty. Schneider Electric high break contacts will avoid the risk of burnt relay contacts.

4. Initiation of Teleprotection

   The high break contacts also offer fast making. This can provide faster tripping: additionally, fast keying of teleprotection is a benefit. Fast keying bypasses the

usual contact operation time, such that permissive, blocking and intertrip commands can be routed faster.

2.5 IRIG-B Board Modulated or Unmodulated Board (Optional)

The IRIG-B board is an order option that can be fitted to provide an accurate timing reference for the relay. This can be used wherever an IRIG-B signal is available. The IRIG-B signal is connected to the board via a BNC connector on the back of the relay. The timing information is used to synchronize the relay's internal real-time clock to an accuracy of 1 ms. The internal clock is then used for the time tagging of the event, fault maintenance and disturbance records.

The IRIG-B board can also be specified with a fiber optic or Ethernet rear communication port.

2.6 Second Rear Communications Board

For relays with Courier, MODBUS, IEC 60870-5-103 or DNP3.0 protocol on the first rear communications port there is the hardware option of a second rear communications port, which will run the Courier language. This can be used over one of three physical links: twisted pair K-Bus (non-polarity sensitive), twisted pair EIA(RS)485 (connection polarity sensitive) or EIA(RS)232.

The second rear comms. Board, Ethernet and IRIG-B boards are mutually exclusive since they use the same hardware slot. For this reason two versions of second rear comms. and Ethernet boards are available; one with an IRIG-B input and one without. The physical layout of the second rear comms. board is shown in Figure 4.

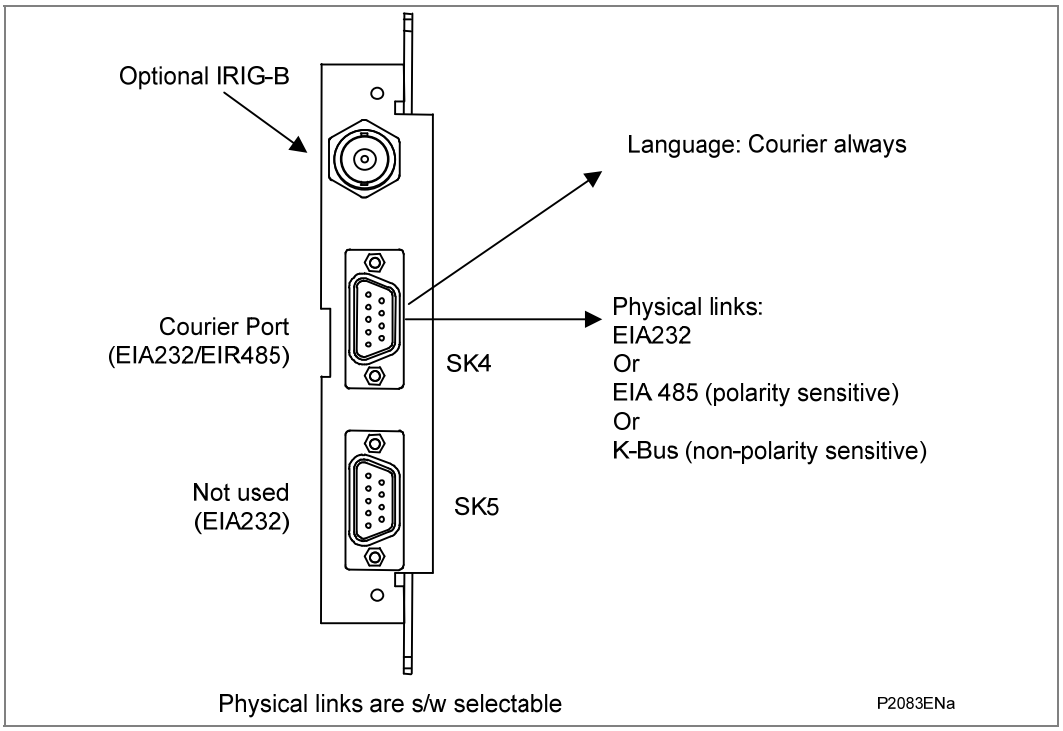

Figure 4 - Second rear comms. Port

2.7 Ethernet Board

For IEC 61850 over Ethernet two boards are available, the single Ethernet board (ZN0049) and the redundant Ethernet board (ZN0071). Both are required for communications but the dual redundant Ethernet board allows an alternative path to be always available, providing bumpless redundancy.

The optional single Ethernet board (ZN0049) has three variants which support the IEC 61850 implementation:

- 100 Mbits/s Fiber Optic + 10/100 Mbits/s Copper
- 100 Mbits/s Fiber Optic + 10/100 Mbits/s Copper + modulated IRIG-B
- 100 Mbits/s Fiber Optic + 10/100 Mbits/s Copper + unmodulated IRIG-B

The single Ethernet port card is fitted into Slot A of the relay, which is the optional communications slot. Each Ethernet card has a unique MAC address used for Ethernet communications. This is printed on the rear of the card, alongside the Ethernet sockets.

The 100 Mbits/s Fiber Optic ports use ST® type connectors and are suitable for 1300 nm multi-mode fiber type.

The single Ethernet port board has copper ports using RJ45 type connectors. When using copper Ethernet, it is important to use Shielded Twisted Pair (STP) or Foil Twisted Pair (FTP) cables, to shield the IEC 61850 communications against electromagnetic interference. The RJ45 connector at each end of the cable must be shielded, and the cable shield must be connected to this RJ45 connector shield, so that the shield is grounded to the relay case. Both the cable and the RJ45 connector at each end of the cable must be Category 5 minimum, as specified by the IEC 61850 standard. It is recommended that each copper Ethernet cable is limited to a maximum length of three meters and confined within one bay/cubicle.

When using IEC 61850 communications through the Ethernet card, the rear EIA(RS)485 and front EIA(RS)232 ports are also available for simultaneous use, both using the Courier protocol.

The physical layout of the single port Ethernet board is shown in Figure 5.

Industrial network failure can be disastrous. Redundancy provides increased security and reliability, but also devices can be added to or removed from the network without network downtime.

The following list shows Schneider Electrics implementation of Ethernet redundancy, which has six variants with embedded IEC 61850 over Ethernet, plus SHP, RSTP and DHP redundancy protocols.

- Self Healing Protocol (SHP) with 1300 nm multi mode 100BaseFx fiber optic Ethernet ports (ST® connector) and modulated IRIG-B input.
- Self Healing Protocol (SHP) with 1300 nm multi mode 100BaseFx fiber optic Ethernet ports (ST® connector) and unmodulated IRIG-B input.

Note:	*Both of these boards offer compatibility with C264-SWR202 and H35x multi-mode switches. Self healing Protocol is a Schneider Electric proprietary solution providing extremely fast recovery time.*

- Rapid Spanning Tree Protocol (RSTP IEEE 802.1D 2004) with 1300 nm multi mode 100BaseFx fiber optic Ethernet ports (ST® connector) and modulated IRIG-B input.
- Rapid Spanning Tree Protocol (RSTP IEEE 802.1D 2004) with 1300 nm multi mode 100BaseFx fiber optic Ethernet ports (ST® connector) and unmodulated IRIG-B input.

Note	*Both of these boards offer the RSTP protocol.*

- Dual Homing Protocol (DHP) with 1300 nm multi mode 100BaseFx fiber optic Ethernet ports (ST® connector) and modulated IRIG-B input.
- Dual Homing Protocol (DHP) with 1300 nm multi mode 100BaseFx fiber optic Ethernet ports (ST® connector) and unmodulated IRIG-B input.

Note:	*Both of these boards offer compatibility with C264-SWD202 and H36x multi-mode switches. Dual Homing Protocol is a Schneider Electric proprietary solution providing bumpless redundancy to the IED.*

The redundant Ethernet board is fitted into Slot A of the IED, which is the optional communications slot. Each Ethernet board has two MAC addresses, one for the managed embedded switch and one for the IED. The MAC address of the IED is printed on the rear panel of the IED. See the Redundant Ethernet Board User Guide, Px4x/EN REB for more information on redundant Ethernet communications.

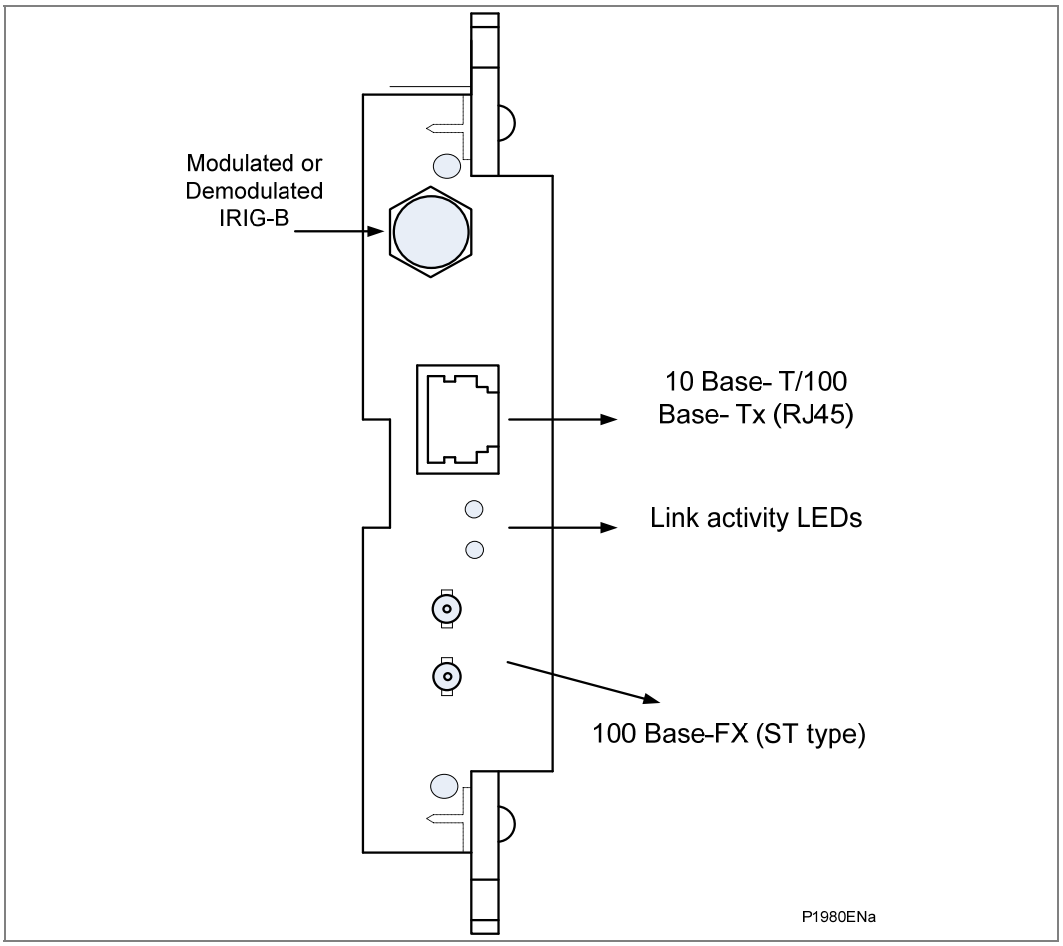

Figure 5 - Single Ethernet board

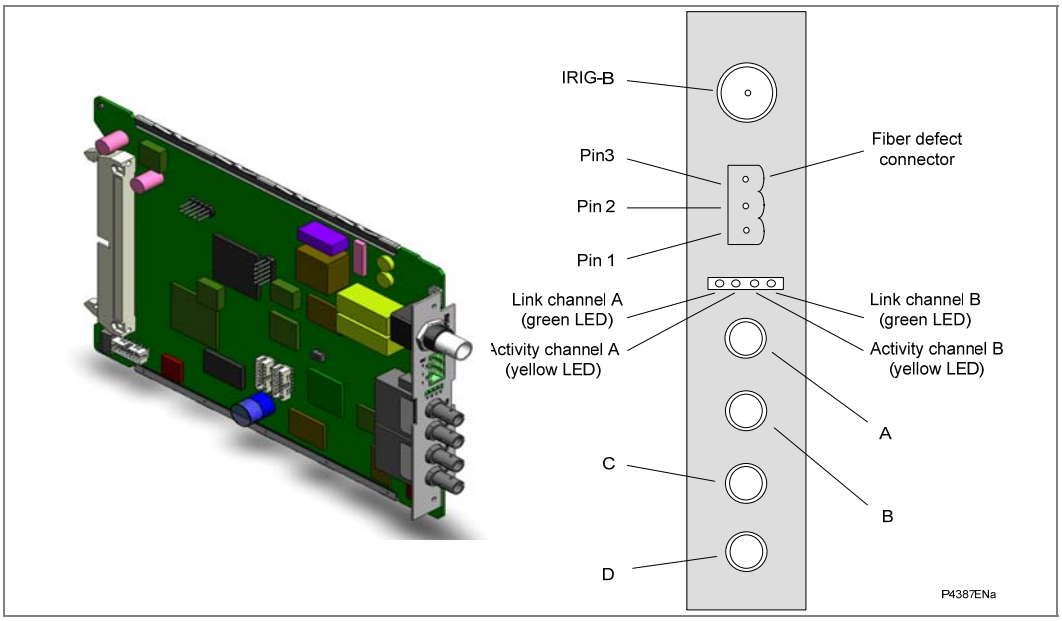

Figure 6 - Redundant Ethernet board connectors

2.8 Current Loop Input Output Board (CLIO)

The Current Loop Input Output (CLIO) board is an order option. The CLIO board is powered from the 22 V power rail that is used to drive the output relays.

Four analog (or current loop) inputs are provided for transducers with ranges of 0 - 1 mA, 0 - 10 mA, 0 - 20 mA or 4 - 20 mA. The input current data is read by the processor through the parallel data bus, and is used to provide measurements from various transducers such as vibration monitors, tachometers and pressure transducers.

For each of the four current loop inputs there are two separate input circuits, 0 - 1 mA and 0 - 20 mA. The latter is also used for 0 - 10 mA and 4 - 20 mA transducer inputs. The anti-alias filters have a nominal cut-off frequency (3 dB point) of 23 Hz to reduce power system interference from the incoming signals. Four analog current outputs are provided with ranges of 0 - 1 mA, 0 - 10 mA, 0 - 20 mA or 4 - 20 mA which can alleviate the need for separate transducers. These may be used to feed standard moving coil ammeters for analog indication of certain measured quantities or into a SCADA using an existing analog RTU.

Each of the four current loop outputs provides one 0 - 1 mA output, one 0 - 20 mA output and one common return. Suitable software scaling of the value written to the board allows the 0 - 20 mA output to also provide 0 - 10 mA and 4 - 20 mA. Screened leads are recommended for use on the current loop output circuits.

The refresh interval for the outputs is nominally 50 ms. The exceptions are shown in the Application Guide chapter. Those exceptional measurements are updated once every second.

All external connections to the current loop I/O board are made via the same 15 way light duty I/O connector SL3.5/15/90F used on the RTD board. Two such connectors are used, one for the current loop outputs and one for the current loop inputs.

The I/O connectors accommodate wire sizes in the range 1/0.85 mm (0.57 mm^2) to 1/1.38 mm (1.5 mm^2) and their multiple conductor equivalents. The use of screened cable is recommended. The screen terminations should be connected to the case earth of the relay.

Basic Insulation (300 V) is provided between analog inputs/outputs and earth and between analog inputs and outputs. However, there is no insulation between one input and another or one output and another.

Connection	IO Blocks	Connection
Outputs	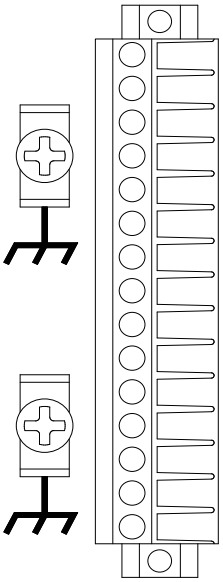	
Screen channel 1		0 - 10/0 - 20/4 - 20 mA channel 1 0 - 1 mA channel 1 Common return channel 1
Screen channel 2		0 - 10/0 - 20/4 - 20 mA channel 2 0 - 1 mA channel 2 Common return channel 2
Screen channel 3		0 - 10/0 - 20/4 - 20 mA channel 3 0 - 1 mA channel 3 Common return channel 3
Screen channel 4		0 - 10/0 - 20/4 - 20 mA channel 4 0 - 1 mA channel 4 Common return channel 4
Inputs	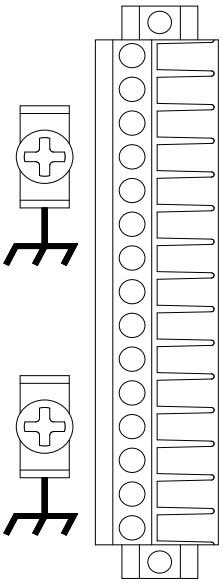	
Screen channel 1		0 - 10/0 - 20/4 - 20 mA channel 1 0 - 1 mA channel 1 Common channel 1
Screen channel 2		0 - 10/0 - 20/4 - 20 mA channel 2 0 - 1 mA channel 2 Common channel 2
Screen channel 3		0 - 10/0 - 20/4 - 20 mA channel 3 0 - 1 mA channel 3 Common channel 3
Screen channel 4		0 - 10/0 - 20/4 - 20 mA channel 4 0 - 1 mA channel 4 Common channel 4

Figure 7 - Current loop input output board

2.9 Mechanical Layout

The relay case is pre-finished steel with a conductive covering of aluminum and zinc. This provides good earthing at all joints giving a low impedance path to earth that is essential for shielding from external noise. The boards and modules use a multi-point earthing strategy to improve the immunity to external noise and minimize the effect of circuit noise. Ground planes are used on boards to reduce impedance paths and spring clips are used to ground the module metalwork.

Heavy duty terminal blocks are used at the rear of the relay for the current and voltage signal connections. Medium duty terminal blocks are used for the digital logic input signals, output relay contacts, power supply and rear communication port. A BNC connector is used for the optional IRIG-B signal. 9-pin and 25-pin female D-connectors are used at the front of the relay for data communication.

Inside the relay the PCBs plug into the connector blocks at the rear, and can be removed from the front of the relay only. The connector blocks to the relay's CT inputs are provided with internal shorting links inside the relay which will automatically short the current transformer circuits before they are broken when the board is removed.

The front panel consists of a membrane keypad with tactile dome keys, an LCD and 12 LEDs mounted on an aluminum backing plate.

3 RELAY SOFTWARE

The relay software was introduced in the overview of the relay at the start of this chapter. The software can be considered to be made up of four sections:

- The real-time operating system
- The system services software
- The platform software
- The protection & control software

This section describes in detail the latter two of these, the platform software and the protection & control software, which between them control the functional behavior of the relay. Figure 8 shows the structure of the relay software.

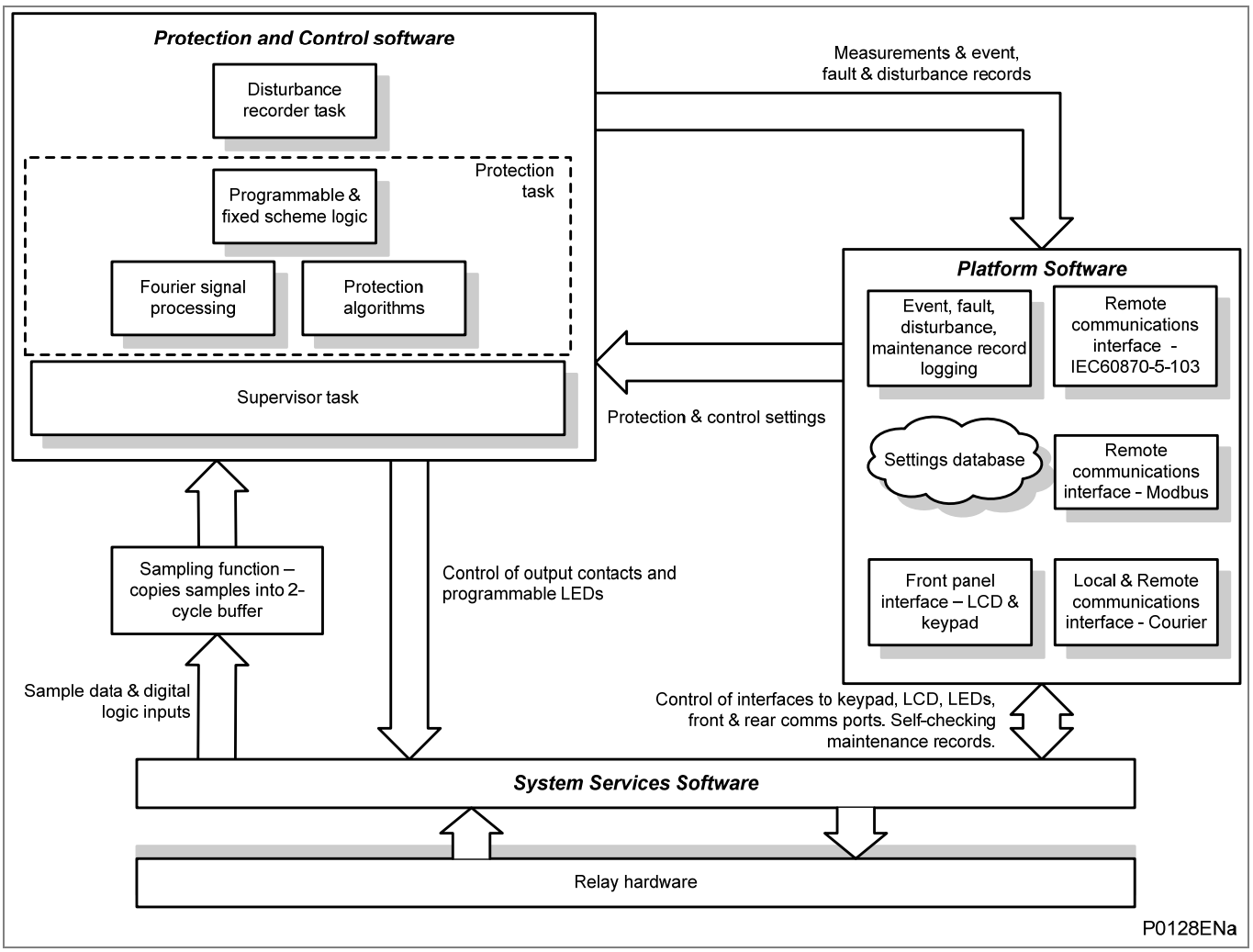

Figure 8 - Relay software structure

3.1 Real-Time Operating System

The software is split into tasks; the real-time operating system is used to schedule the processing of the tasks to ensure that they are processed in the time available and in the desired order of priority. The operating system is also responsible in part for controlling the communication between the software tasks through the use of operating system messages.

3.2 System Services Software

As shown in Figure 8, the system services software provides the interface between the relay's hardware and the higher-level functionality of the platform software and the protection & control software. For example, the system services software provides drivers for items such as the LCD display, the keypad and the remote communication ports, and controls the boot of the processor and downloading of the processor code into SRAM from non-volatile flash EPROM at power up.

3.3 Platform Software

The platform software has three main functions:

- To control the logging of all records that are generated by the protection software, including alarms and event, fault, disturbance and maintenance records.
- To store and maintain a database of all of the relay's settings in non-volatile memory.
- To provide the internal interface between the settings database and each of the relay's user interfaces, i.e. the front panel interface and the front and rear communication ports, using whichever communication protocol has been specified (Courier, MODBUS, IEC 60870-5-103 and DNP3.0).

3.3.1 Record Logging

The logging function is provided to store all alarms, events, faults and maintenance records. The records for all of these incidents are logged in battery backed-up SRAM to provide a non-volatile log of what has happened. The relay maintains four logs: one each for up to 32 alarms, 512 event records, 5 fault records and 5 maintenance records. The logs are maintained such that the oldest record is overwritten with the newest record. The logging function can be initiated from the protection software or the platform software.

The logging function can be initiated from the protection software or the platform software is responsible for logging of a maintenance record in the event of a relay failure. This includes errors that have been detected by the platform software itself or error that are detected by either the system services or the protection software functions. See section 4 Self testing & Diagnostics later in this chapter.

3.3.2 Settings Database

The settings database contains all of the settings and data for the relay, including the protection, disturbance recorder and control & support settings. The settings are maintained in non-volatile memory. The platform software's management of the settings database includes the responsibility of ensuring that only one user interface modifies the settings of the database at any one time. This feature is employed to avoid confusion between different parts of the software during a setting change. For changes to protection settings and disturbance recorder settings, the platform software operates a

'scratchpad' in SRAM memory. This allows a number of setting changes to be made in any order but applied to the protection elements, disturbance recorder and saved in the database in non-volatile memory, at the same time (see chapter *P341/EN IT* on the user interface). If a setting change affects the protection & control task, the database advises it of the new values.

3.3.3 Database Interface

The other function of the platform software is to implement the relay's internal interface between the database and each of the relay's user interfaces. The database of settings and measurements must be accessible from all of the relay's user interfaces to allow read and modify operations. The platform software presents the data in the appropriate format for each user interface.

3.4 Protection and Control Software

The protection and control software task is responsible for processing all of the protection elements and measurement functions of the relay. To achieve this it has to communicate with both the system services software and the platform software as well as organize its own operations. The protection software has the highest priority of any of the software tasks in the relay in order to provide the fastest possible protection response. The protection & control software has a supervisor task that controls the start-up of the task and deals with the exchange of messages between the task and the platform software.

3.4.1 Overview - Protection and Control Scheduling

After initialization at start-up, the protection & control task waits until there are enough samples to process. The sampling function is called by the system services software and takes each set of new samples from the input module and stores them in a two-cycle buffer. The protection & control software resumes execution when the number of unprocessed samples in the buffer reaches a certain number. However, the protection elements are split into groups so that different elements are processed each time, with every element being processed at least once per cycle. The protection and control software is suspended again when all of its processing on a set of samples is complete. This allows operations by other software tasks to take place.

3.4.2 Signal Processing

The sampling function filters the digital input signals from the opto-isolators and tracks the frequency of the analog signals. The digital inputs are checked against their previous value over a period of half a cycle. Therefore a change in the state of one of the inputs must be maintained over at least half a cycle before it is registered with the protection & control software.

The frequency tracking of the analog input signals is achieved by a recursive Fourier algorithm which is applied to one of the input signals, and works by detecting a change in the measured signal's phase angle. The calculated value of the frequency is used to modify the sample rate being used by the input module so as to achieve a constant sample rate of 24 samples per cycle of the power waveform. The value of the frequency is also stored for use by the protection & control task.

When the protection & control task is re-started by the sampling function, it calculates the Fourier components for the analog signals. The Fourier components are calculated using a one-cycle, 24-sample Discrete Fourier Transform (DFT). The DFT is always calculated using the last cycle of samples from the 2-cycle buffer, which is the most recent data. The DFT used in this way extracts the power frequency fundamental component from the signal and produces the magnitude and phase angle of the fundamental in rectangular component format. The DFT provides an accurate measurement of the fundamental frequency component, and effective filtering of harmonic frequencies and noise. This

performance is achieved in conjunction with the relay input module which provides hardware anti-alias filtering to attenuate frequencies above the half sample rate, and frequency tracking to maintain a sample rate of 24 samples per cycle. The Fourier components of the input current and voltage signals are stored in memory so that they can be accessed by all of the protection elements' algorithms. The samples from the input module are also used in an unprocessed form by the disturbance recorder for waveform recording and to calculate true rms values of current, voltage and power for metering purposes.

3.4.3 Frequency Response

With the exception of the RMS measurements all other measurements and protection functions are based on the Fourier derived fundamental component. The fundamental component is extracted by using a 24 sample Discrete Fourier Transform (DFT). This gives good harmonic rejection for frequencies up to the 23rd harmonic. The 23rd is the first predominant harmonic that is not attenuated by the Fourier filter and this is known as an 'Alias'. However, the Alias is attenuated by approximately 85% by an additional, analog, 'anti-aliasing' filter (low pass filter). The combined affect of the anti-aliasing and Fourier filters is shown in Figure 9.

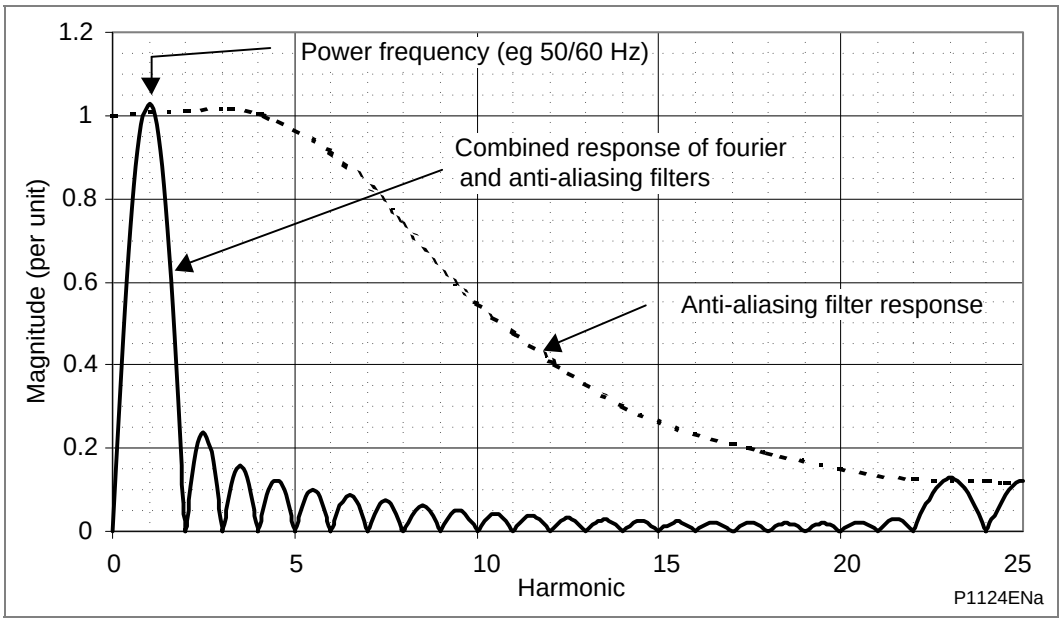

Figure 9 - Frequency response

For power frequencies that are not equal to the selected rated frequency the harmonics are attenuated to zero amplitude. For small deviations of ±1 Hz, this is not a problem but to allow for larger deviations, frequency tracking is used.

Frequency tracking automatically adjusts the sampling rate of the analog to digital conversion to match the applied signal. In the absence of a suitable signal to amplitude track, the sample rate defaults to the selected rated frequency (Fn). If the signal is in the tracking range of 40 to 70 Hz, the relay will lock on to the signal and the measured frequency will coincide with the power frequency as shown in Figure 9. The resulting outputs for harmonics up to the 23rd will be zero. The relay will frequency track off any voltage or current in the order VA/VB/VC/IA/IB/IC down to 10% Vn for voltage and 5%In for current.

3.4.4 Programmable Scheme Logic (PSL)

The purpose of the Programmable Scheme Logic (PSL) is to allow the relay user to configure an individual protection scheme to suit their own particular application. This is done with programmable logic gates and delay timers.

The input to the PSL is any combination of the status of the digital input signals from the opto-isolators on the input board, the outputs of the protection elements such as protection starts and trips, and the outputs of the fixed protection scheme logic. The fixed scheme logic provides the relay's standard protection schemes. The PSL itself consists of software logic gates and timers. The logic gates can be programmed to perform a range of different logic functions and can accept any number of inputs. The timers are used either to create a programmable delay, or to condition the logic outputs, such as to create a pulse of fixed duration on the output regardless of the length of the pulse on the input. The outputs of the PSL are the LEDs on the front panel of the relay and the output contacts at the rear.

The execution of the PSL logic is event driven: the logic is processed whenever any of its inputs change, for example as a result of a change in one of the digital input signals or a trip output from a protection element. Also, only the part of the PSL logic that is affected by the particular input change that has occurred is processed. This reduces the amount of processing time that is used by the PSL. The protection & control software updates the logic delay timers and checks for a change in the PSL input signals every time it runs.

This system provides flexibility for the user to create their own scheme logic design. However, it also means that the PSL can be configured into a very complex system, and because of this setting of the PSL is implemented through the PC support package S1 Studio.

3.4.4.1 PSL Data

In the PSL editor in S1 Studio when a PSL file is downloaded to the relay the user can specify the group to download the file and a 32 character PSL reference description. This PSL reference is shown in the Grp. 1/2/3/4 PSL Ref. cell in the PSL DATA menu in the relay. The download date and time and file checksum for each groups PSL file is also shown in the PSL DATA menu in cells Date/Time and Grp. 1/2/3/4 PSL ID. The PSL data can be used to indicate if a PSL has been changed and thus be useful in providing information for version control of PSL files.

The default PSL Reference description is Default PSL followed by the model number, for example Default PSL P34x??????0yy0? where x refers to the model e.g. 1, 2, 3 and yy refers to the software version e.g. 05. This is the same for all protection setting groups (since the default PSL is the same for all groups). Since the LCD display (bottom line) only has space for 16 characters the display must be scrolled to see all 32 characters of the PSL Reference description.

The default date and time is the date and time when the defaults were loaded from flash into EEPROM.

Note	*The PSL DATA column information is only supported by Courier and MODBUS, but not DNP3.0, IEC 61850 or IEC 60870-5-103.*

3.4.5 Event, Fault and Maintenance Recording

A change in any digital input signal or protection element output signal is used to indicate that an event has taken place. When this happens, the protection & control task sends a message to the supervisor task to indicate that an event is available to be processed and writes the event data to a fast buffer in SRAM that is controlled by the supervisor task. When the supervisor task receives either an event or fault record message, it instructs the platform software to create the appropriate log in battery backed-up SRAM. The operation of the record logging to battery backed-up SRAM is slower than the

supervisor's buffer. This means that the protection software is not delayed waiting for the records to be logged by the platform software. However, in the rare case when a large number of records to be logged are created in a short period of time, it is possible that some will be lost, if the supervisor's buffer is full before the platform software is able to create a new log in battery backed-up SRAM. If this occurs then an event is logged to indicate this loss of information.

Maintenance records are created in a similar manner with the supervisor task instructing the platform software to log a record when it receives a maintenance record message. However, it is possible that a maintenance record may be triggered by a fatal error in the relay in which case it may not be possible to successfully store a maintenance record, depending on the nature of the problem. See the section on self supervision & diagnostics.

3.4.6 Disturbance Recorder

The disturbance recorder operates as a separate task from the protection and control task. It can record the waveforms for up to 8 analog channels and the values of up to 32 digital signals. The recording time is user selectable up to a maximum of 10 seconds. The disturbance recorder is supplied with data by the protection and control task once per cycle. The disturbance recorder collates the data that it receives into the required length disturbance record. The disturbance records can be extracted by S1 Studio that can also store the data in COMTRADE format, therefore allowing the use of other packages to view the recorded data.

4 SELF-TESTING AND DIAGNOSTICS

The relay includes several self-monitoring functions to check the operation of its hardware and software when it is in service. These are included so that if an error or fault occurs in the relay's hardware or software, the relay is able to detect and report the problem and attempt to resolve it by performing a reboot. The relay must therefore be out of service for a short period, during which the Healthy LED on the front of the relay is OFF and, the watchdog contact at the rear is ON. If the reboot fails to resolve the problem, the relay takes itself permanently out of service; the Healthy LED stays OFF and watchdog contact stays ON.

If a problem is detected by the self-monitoring functions, the relay stores a maintenance record in battery backed-up SRAM to allow the nature of the problem to be notified to the user.

The self-monitoring is implemented in two stages: firstly a thorough diagnostic check that is performed when the relay is booted-up and secondly a continuous self-checking operation that checks the operation of the relay's critical functions whilst it is in service.

4.1 Start-Up Self-Testing

The self-testing that is carried out when the relay is started takes a few seconds to complete, during which time the relay's protection is unavailable. This is signaled by the Healthy LED on the front of the relay that will illuminate when the relay has passed all of the tests and entered operation. If the testing detects a problem, the relay will remain out of service until it is manually restored to working order.

The operations that are performed at start-up are as follows:

4.1.1 System Boot

The integrity of the flash EPROM memory is verified using a checksum before the program code and data stored in it is copied into SRAM to be used for execution by the processor. When the copy has been completed the data then held in SRAM is compared to that in the flash EPROM to ensure that the two are the same and that no errors have occurred in the transfer of data from flash EPROM to SRAM. The entry point of the software code in SRAM is then called which is the relay initialization code.

4.1.2 Initialization Software

The initialization process includes the operations of initializing the processor registers and interrupts, starting the watchdog timers (used by the hardware to determine whether the software is still running), starting the real-time operating system and creating and starting the supervisor task. In the course of the initialization process the relay checks:

- The status of the battery
- The integrity of the battery backed-up SRAM that is used to store event, fault and disturbance records
- The voltage level of the field voltage supply that is used to drive the opto-isolated inputs
- The operation of the LCD controller
- The watchdog operation

When the initialization software routine is compete, the supervisor task starts the platform software.

4.1.3 Platform Software Initialization and Monitoring

In starting the platform software, the relay checks the integrity of the data held in non-volatile memory with a checksum, the operation of the real-time clock, and the IRIG-B, and CLIO board if fitted. The final test that is made concerns the input and output of data; the presence and healthy condition of the input board is checked and the analog data acquisition system is checked through sampling the reference voltage.

At the successful conclusion of all of these tests the relay is entered into service and the protection started-up.

4.2 Continuous Self-Testing

When the relay is in service, it continually checks the operation of the critical parts of its hardware and software. The checking is carried out by the system services software (see section on relay software earlier in this chapter) and the results reported to the platform software. The functions that are checked are as follows:

- The flash EPROM containing all program code and language text is verified by a checksum
- The code and constant data held in SRAM is checked against the corresponding data in flash EPROM to check for data corruption
- The SRAM containing all data other than the code and constant data is verified with a checksum
- The non-volatile memory containing setting values is verified by a checksum, whenever its data is accessed
- The battery status
- The level of the field voltage
- The integrity of the digital signal I/O data from the opto-isolated inputs and the relay contacts, is checked by the data acquisition function every time it is executed. The operation of the analog data acquisition system is continuously checked by the acquisition function every time it is executed, by means of sampling the reference voltage on a spare multiplexed channel
- The operation of the IRIG-B board is checked, where it is fitted, by the software that reads the time and date from the board
- The correct operation of the CLIO board is checked, where it is fitted
- The operation of the Ethernet board is checked, where it is fitted, by the software on the main processor card. If the Ethernet board fails to respond an alarm is raised and the card is reset in an attempt to resolve the problem

In the unlikely event that one of the checks detects an error in the relay's subsystems, the platform software is notified and it will attempt to log a maintenance record in battery backed-up SRAM. If the problem is with the battery status, CLIO board or the IRIG-B board, the relay will continue in operation. However, for problems detected in any other area the relay will initiate a shutdown and reboot. This results in a period of up to 5 seconds when the protection is unavailable, but the complete restart of the relay including all initializations should clear most problems that could occur. An integral part of the start-up procedure is a thorough diagnostic self-check. If this detects the same problem that caused the relay to restart, the restart has not cleared the problem and the relay takes itself permanently out of service. This is indicated by the Healthy LED on the front of the relay, which goes OFF, and the watchdog contact that goes ON.

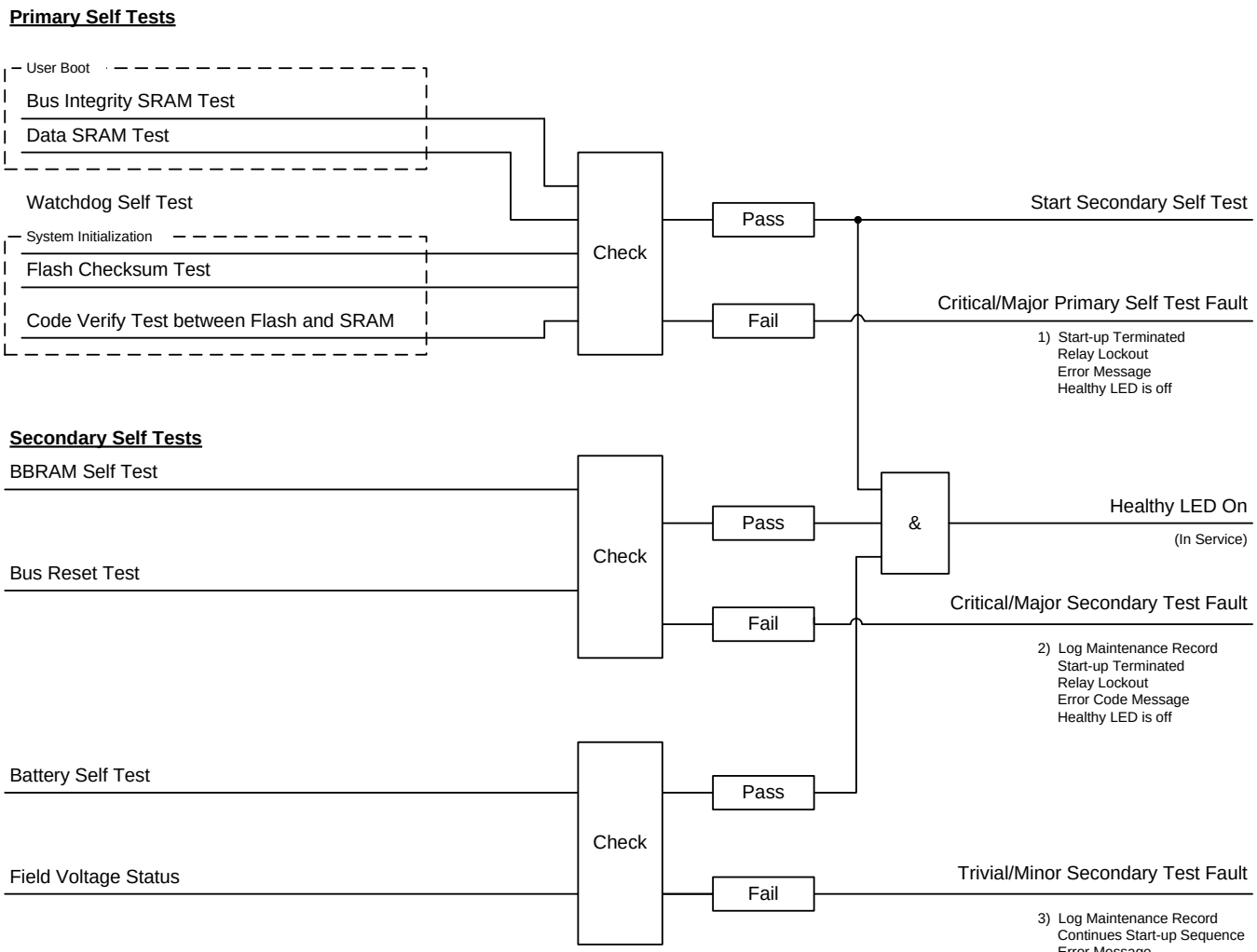

1) Critical, Primary Self Test Error Messages

Error Message on User Interface	Description
Bus Fail	Integrity Bus Test Error
SRAM Fail	SRAM Test Error
Flash Fail (Checksum)	Flash Test Error detected in the flash structure
Code Verify Fail	Error in code comparison test flash
Watchdog fail	Watchdog circuit fails to operate

2) Critical, Secondary Self Test Error Messages

Error Code	Description
0x0C170017	The secondary self tests detected an error in the Battery Backed SRAM (BBRAM)
0x0C170018	The secondary self tests detected an error in the Bus Curcuit

3) Trivial, Secondary Power on Self Tests Alarm Indications

Alarm	Description
Battery Failure	The secondary self tests detected battery self test has failed
Field Volt Fail	The secondary self tests detected Field Voltage failure

Figure 10 - Start-up self-testing logic

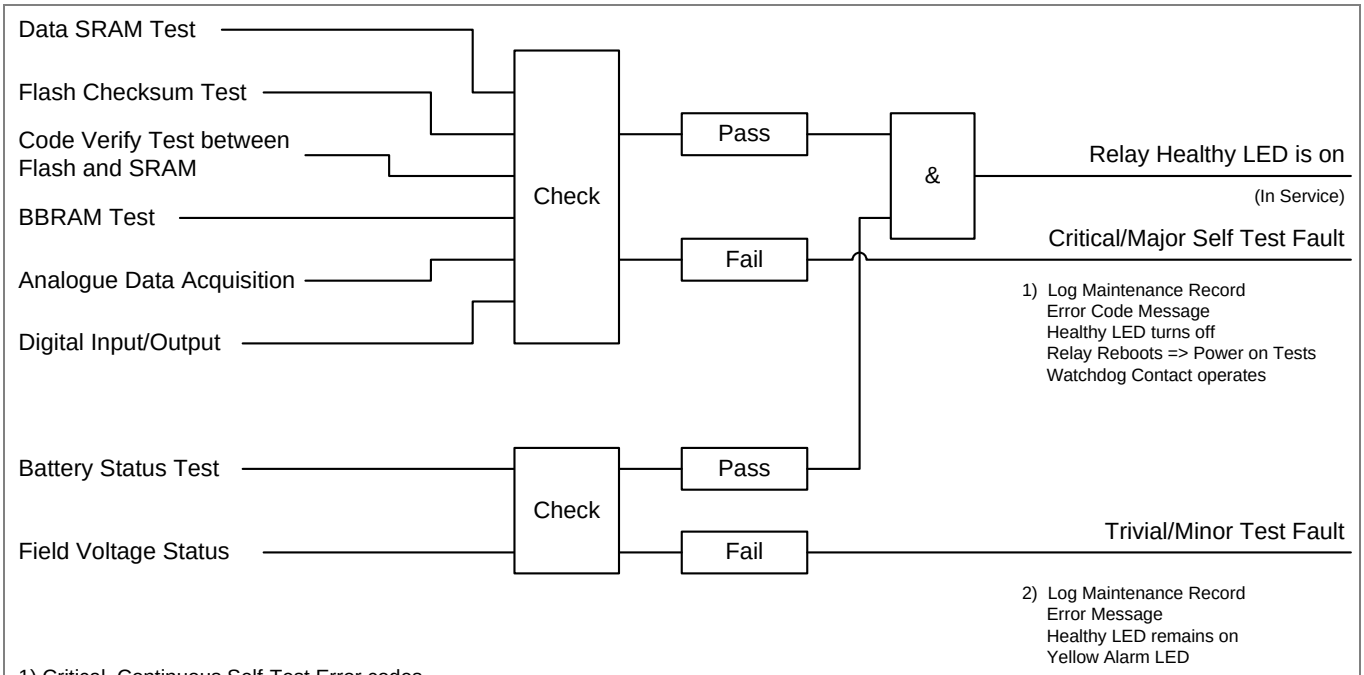

1) Critical, Continuous Self-Test Error codes

Error Code	Description
0x0C160011	The continuous self tests detected an error in SRAM
0x0C160012	The continuous self tests detected an error in the Flash memory checksum
0x0C160013	The continuous self tests detected an error in the code comparison
0x0C160014	The continuous self tests detected an error in the Battery Backed RAM
0x0C1600A0	The continuous self tests detected an error in the acquisition card
0x0C1600Bn	The continuous self tests detected an error in relay card n (number from 0)
0x0C1600Cn	The continuous self tests detected an error in opto card n (number from 0)

2) Trivial, Continuous Self-Test alarm indications

Error Code	Description
Battery Failure	The secondary self tests detected battery self test has failed
Field Volt Fail	The secondary self tests detected Field Voltage failure

P1626ENa

Figure 11 - Continuous self-testing logic

Notes:

COMMISSIONING

CHAPTER 10

Date:	February 2012
Hardware Suffix:	J (P341)
Software Version:	36 and 71 (with DLR)
Connection Diagrams:	10P341xx (xx = 01 to 12)

CONTENTS

FIGURES

TABLES

1 INTRODUCTION

The P341 Interconnection Protection Relays are fully numerical in their design, implementing all protection and non-protection functions in software. The relays use a high degree of self-checking and give an alarm in the unlikely event of a failure. Therefore, the commissioning tests do not need to be as extensive as with non-numeric electronic or electro-mechanical relays.

To commission numeric relays, it is only necessary to verify that the hardware is functioning correctly and the application-specific software settings have been applied to the relay. It is considered unnecessary to test every function of the relay if the settings have been verified by one of the following methods:

- Extracting the settings applied to the relay using appropriate setting software (Preferred method)
- Using the operator interface.

To confirm that the product is operating correctly once the application-specific settings have been applied, perform a test on a single protection element.

Unless previously agreed to the contrary, the customer is responsible for determining the application-specific settings to be applied to the relay and for testing of any scheme logic applied by external wiring and/or configuration of the relay's internal programmable scheme logic.

Blank commissioning test and setting records are provided at the end of this chapter for completion as required.

As the relay's menu language is user-selectable, the Commissioning Engineer can change it to allow accurate testing as long as the menu is restored to the customer's preferred language on completion.

To simplify the specifying of menu cell locations in these Commissioning Instructions, they will be given in the form [courier reference: COLUMN HEADING, Cell Text]. For example, the cell for selecting the menu language (first cell under the column heading) is in the System Data column (column 00) so it appears as [0001: **SYSTEM DATA**, **Language**].

Caution	**Before carrying out any work on the equipment, the user should be familiar with the contents of the Safety Section SFTY/4LM/G11 or later issue and the ratings on the equipment's rating label.**

2 SETTING FAMILIARIZATION

When first commissioning a P341 relay, allow sufficient time to become familiar with how to apply the settings.

The Relay Menu Database document (*P341/EN MD*) and the Settings chapter contain a detailed description of the menu structure of P341relay.

With the secondary front cover in place all keys except the ⏎ key are accessible. All menu cells can be read. LEDs and alarms can be reset. However, no protection or configuration settings can be changed, or fault and event records cleared.

Removing the secondary front cover allows access to all keys so that settings can be changed, LEDs and alarms reset, and fault and event records cleared. However, to make changes to menu cells that have access levels higher than the default level, the appropriate password is needed.

Alternatively, if a portable PC with suitable setting software is available (such as S1 studio), the menu can be viewed one page at a time, to display a full column of data and text. This PC software also allows settings to be entered more easily, saved to a file on disk for future reference or printed to produce a setting record. Refer to the PC software user manual for details. If the software is being used for the first time, allow sufficient time to become familiar with its operation.

3 COMMISSIONING TEST MENU

To minimize the time needed to test MiCOM relays, the relay provides several test facilities under the **COMMISSION TESTS** menu heading. There are menu cells which allow the status of the opto-isolated inputs, output relay contacts, internal Digital Data Bus (DDB) signals and user-programmable LEDs to be monitored. Also, there are cells to test the operation of the output contacts and user-programmable LEDs.

Table 1 shows the relay menu of commissioning tests, including the available setting ranges and factory defaults.

Menu text	Default setting	Settings
COMMISSION TESTS		
Opto I/P Status		
Relay O/P Status		
Test Port Status		
LED Status		
Monitor Bit 1	64 (LED 1)	0 to 511 See *P341/EN PL* for details of DDB signals
Monitor Bit 3	66 (LED 3)	
Monitor Bit 4	67 (LED 4)	
Monitor Bit 5	68 (LED 5)	
Monitor Bit 6	69 (LED 6)	
Monitor Bit 7	70 (LED 7)	
Monitor Bit 8	71 (LED 8)	
Test Mode	Disabled	Disabled Test Mode Contacts Blocked
Test Pattern	All bits set to 0	0 = Not Operated 1 = Operated
Contact Test	No Operation	No Operation Apply Test Remove Test
Test LEDs	No Operation	No Operation Apply Test

Table 1 - List of test facilities within COMMISSION TESTS menu

3.1 Opto I/P Status

This menu cell displays the status of the relay's opto-isolated inputs as a binary string, a **1** indicating an energized opto-isolated input and a **0** a de-energized one. If the cursor is moved along the binary numbers the corresponding label text will be displayed for each logic input.

The menu cell can be used during commissioning or routine testing to monitor the status of the opto-isolated inputs while they are sequentially energized with a suitable dc voltage.

3.2 Relay O/P Status

This menu cell displays the status of the DDB signals that result in energization of the output relays as a binary string, a **1** indicating an operated state and **0** a non-operated state. If the cursor is moved along the binary numbers the corresponding label text will be displayed for each relay output.

The information displayed can be used during commissioning or routine testing to show the status of the output relays when the relay is 'in service'. Also, to fault find for output relay damage, compare the status of the output contact under investigation with its associated bit.

Note	*When the **Test Mode** cell is set to **Enabled** this cell continues to show which contacts would operate if the relay was in-service. It does not show the actual status of the output relays.*

3.3 Test Port Status

This menu cell displays the status of the eight DDB signals that have been allocated in the **Monitor Bit** cells. If the cursor is moved along the binary numbers the corresponding DDB signal text string will be displayed for each monitor bit.

By using this cell with suitable monitor bit settings, the state of the DDB signals can be displayed as various operating conditions or sequences are applied to the relay. Therefore the programmable scheme logic can be tested.

As an alternative to using this cell, the optional monitor/download port test box can be plugged into the monitor/download port behind the bottom access cover. For details see section 3.10 of this chapter.

3.4 LED Status

The **LED Status** cell is an 8-bit binary string that indicates which of the user-programmable LEDs on the relay are ON when accessing the relay from a remote location. A **1** means that a particular LED is ON and a **0** means that it is OFF.

3.5 Monitor Bits 1 to 8

The eight **Monitor Bit** cells allow the user to select the status of which digital data bus signals can be observed in the **Test Port Status** cell or using the monitor/download port.

Each monitor bit is set by entering the required DDB signal number (0 – 511) from the list of available DDB signals in the Programmable Logic chapter. The pins of the monitor/download port used for monitor bits are shown in the following table. The signal ground is available on pins 18, 19, 22 and 25.

Monitor Bit	1	2	3	4	5	6	7	8
Monitor/ Download Port Pin	11	12	15	13	20	21	23	24

Warning	**The monitor/download port does not have electrical isolation against induced voltages on the communications channel. It should therefore only be used for local communications.**

3.6 Test Mode

The **Test Mode** menu cell is used to allow secondary injection testing to be performed on the relay without operation of the trip contacts. The Test Mode is also used in the IEC 60870-5-103 protocol, see the SCADA Communications chapter. It also enables a facility to directly test the output contacts by applying menu controlled test signals.

To select test mode, set the **Test Mode** menu cell to **Test Mode**. This takes the relay out of service and blocks the maintenance counters. It also causes an alarm condition to be

recorded, the yellow **Out of Service** LED switches ON, and an alarm message **Prot'n Disabled** is displayed.

To enable testing of output contacts, set the **Test Mode** cell to **Contacts Blocked**. This blocks the protection from operating the contacts. It also enables the test pattern and contact test functions, used to manually operate the output contacts. Once testing is complete, set the cell back to **Disabled** to restore the relay back to service.

Caution	**When the 'Test Mode' cell is set to 'test mode/contacts blocked' the relay scheme logic does not drive the output relays. Therefore the protection does not trip the associated circuit breaker if a fault occurs.**

3.7 Test Pattern

The **Test Pattern** cell is used to select the output relay contacts that are tested when the **Contact Test** cell is set to **Apply Test**. The cell has a binary string with one bit for each user-configurable output contact which can be set to **1** to operate the output under test conditions and **0** to not operate it.

3.8 Contact Test

When the **Apply Test** command in this cell is issued, the contacts set to 1 for operation in the **Test Pattern** cell change state. After the test has been applied, the command text on the LCD will change to **No Operation** and the contacts will remain in the Test State until reset issuing the **Remove Test** command. The command text on the LCD will again revert to **No Operation** after the **Remove Test** command has been issued.

Note	*When the **Test Mode** cell is set to **Enabled** the **Relay O/P Status** cell does not show the current status of the output relays and hence can not be used to confirm operation of the output relays. Therefore it will be necessary to monitor the state of each contact in turn.*

3.9 Test LEDs

When the **Apply Test** command in this cell is issued, the eight user-programmable LEDs are ON for approximately 2 seconds before they switch OFF and the command text on the LCD reverts to **No Operation**.

3.10 Using a Monitor/Download Port Test Box

A monitor/download port test box containing eight LEDs and a switchable audible indicator is available from Schneider Electric, or one of their regional sales offices. It is housed in a small plastic box with a 25-pin male D-connector that plugs directly into the relay's monitor/download port. There is also a 25-pin female D-connector which allows other connections to be made to the monitor/download port while the monitor/download port test box is in place.

Each LED corresponds to one of the monitor bit pins on the monitor/download port with **Monitor Bit 1** on the left hand side when viewed from the front of the relay. The audible indicator can either be selected to sound if a voltage appears on any of the eight monitor pins or remain silent so that indication of state is by LED alone.

4 EQUIPMENT REQUIRED FOR COMMISSIONING

4.1 Minimum Equipment Required

- Overcurrent test set with interval timer
- 110 V ac voltage supply (if stage 1 of the overcurrent function is set directional)
- Multimeter with suitable ac current range and ac and dc voltage ranges of 0 - 440 V and 0 - 250 V respectively
- Continuity tester (if not included in multimeter)
- Phase angle meter
- Phase rotation meter
- 100 Ω precision wirewound or metal film resistor, 0.1% tolerance (0ºC±2ºC)

Note	*Test equipment may contain many of the above features in one unit.*

4.2 Optional Equipment

- Multi-finger test plug type MMLB01 or P992 (if test block type MMLG or P991 is installed)
- An electronic or brushless insulation tester with a dc output not exceeding 500 V (For insulation resistance testing when required).
- A portable PC, with appropriate software. This enables the rear communications port to be tested, if this is to be used, and saves considerable time during commissioning.
- KITZ K-Bus to EIA(RS)232 protocol converter (if the EIA(RS)485 K-Bus port is being tested and one is not already installed).
- EIA(RS)485 to EIA(RS)232 converter (if the EIA(RS)485 Modbus port is being tested).
- A printer (for printing a setting record from the portable PC).

5 PRODUCT CHECKS

These product checks cover all aspects of the relay that need to be checked to ensure that it has not been physically damaged before commissioning, is functioning correctly and all input quantity measurements are within the stated tolerances.

If the application-specific settings have been applied to the relay prior to commissioning, it is advisable to make a copy of the settings so as to allow their restoration later. If Programmable Scheme Logic (PSL) other than the default settings with which the relay is supplied have been applied the default settings should be restored prior to commissioning. This could be done by:

- Obtaining a setting file on a diskette from the customer (this requires a portable PC with appropriate setting software for transferring the settings from the PC to the relay)
- Extracting the settings from the relay itself (this again requires a portable PC with appropriate setting software). If the PSL has been changed from the supplied one, this is the only way of restoring it for commissioning.
- Manually creating a setting record. This could be done using a copy of the setting record located at the end of this chapter to record the settings as the relay's menu is sequentially stepped through via the front panel user interface.

If password protection is enabled and the customer has changed password 2 that prevents unauthorized changes to some of the settings, either the revised password 2 should be provided, or the customer should restore the original password prior to commencement of testing.

Note	*In the event that the password has been lost, a recovery password can be obtained from Schneider Electric by quoting the serial number of the relay. The recovery password is unique to that relay and is unlikely to work on any other relay.*

Caution	**Before carrying out any work on the equipment the user should be familiar with the contents of the Safety Information section/Safety Guide *SFTY/4LM/G11* or later issue and the equipment's rating label.**

5.1 With the Relay De-Energized

The following group of tests should be carried out without the auxiliary supply being applied to the relay and with the trip circuit isolated.

The current and voltage transformer connections must be isolated from the relay for these checks. If a MMLG or P991 test block is provided, the required isolation can easily be achieved by inserting test plug type MMLB01 or P992 which effectively open-circuits all wiring routed through the test block.

Before inserting the test plug, reference should be made to the scheme (wiring) diagram to ensure that this will not potentially cause damage or a safety hazard. For example, the test block may be associated with protection current transformer circuits. It is essential that the sockets in the test plug which correspond to the current transformer secondary windings are linked before the test plug is inserted into the test block.

Danger	**Never open circuit the secondary circuit of a current transformer since the high voltage produced may be lethal and could damage insulation.**

If a test block is not provided, isolate the voltage transformer supply to the relay using the panel links or connecting blocks. The line current transformers should be short-circuited and disconnected from the relay terminals. Where means of isolating the auxiliary supply and trip circuit (e.g. isolation links, fuses, MCB, etc.) are provided, these should be used. If this is not possible, the wiring to these circuits will have to be disconnected and the exposed ends suitably terminated to prevent them from being a safety hazard.

5.1.1 Visual Inspection

Caution	**The rating information given under the top access cover on the front of the relay should be checked. Check that the relay being tested is correct for the protected line/circuit. Ensure that the circuit reference and system details are entered onto the setting record sheet. Double-check the CT secondary current rating, and be sure to record the actual CT tap which is in use.**

Carefully examine the relay to see that no physical damage has occurred since installation.

Ensure that the case earthing connections, bottom left-hand corner at the rear of the relay case, are used to connect the relay to a local earth bar using an adequate conductor.

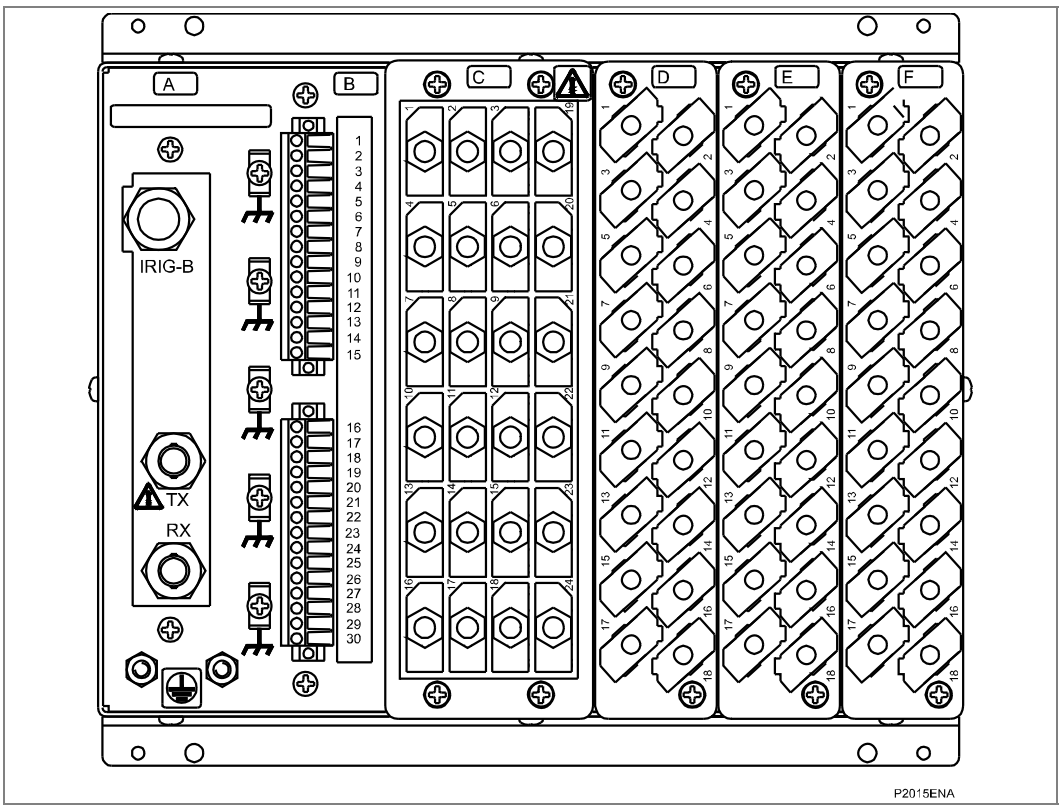

Figure 1 - Rear terminal blocks on size 40TE case

5.1.2 Current Transformer Shorting Contacts

If required, the current transformer shorting contacts can be checked to ensure that they close when the heavy duty terminal block (block reference C in Figure 1) is disconnected from the current input PCB. For P341 relays block reference C (40TE case) and D (60TE case) are heavy duty terminal blocks.

Current input	Shorting contact between terminals			
	P341 (40TE)		P341 (60TE)	
	1A CT's	5A CT's	1A CT's	5A CT's
IA	C3 – C2	C1 – C2	D3 - D2	D1 - D2
IB	C6 – C5	C4 – C5	D6 - D5	D4 - D5
IC	C9 – C8	C7 – C8	D9 - D8	D7 - D8
IN SENSITIVE	C15 – C14	C13 – C14	D15 - D14	D13 - D14

Table 2 - Current transformer shorting contact locations

Heavy duty terminal block are fastened to the rear panel using four crosshead screws. These are located top and bottom between the first and second, and third and fourth, columns of terminals (see Figure 2).

Note	*The use of a magnetic bladed screwdriver is recommended to minimize the risk of the screws being left in the terminal block or lost.*

Pull the terminal block away from the rear of the case and check with a continuity tester that all the shorting switches being used are closed. Table 1 shows the terminals between which shorting contacts are fitted.

Caution	**If external test blocks are connected to the relay, take great care when using the associated test plugs such as MMLB or P992 since their use may make hazardous voltages accessible. *CT shorting links must be in place before the insertion or removal of MMLB or P992 test plugs, to avoid potentially lethal voltages.**

**Note*	*When a P992 Test Plug is inserted into the P991 Test Block, the secondaries of the line CTs are automatically shorted, making them safe.*

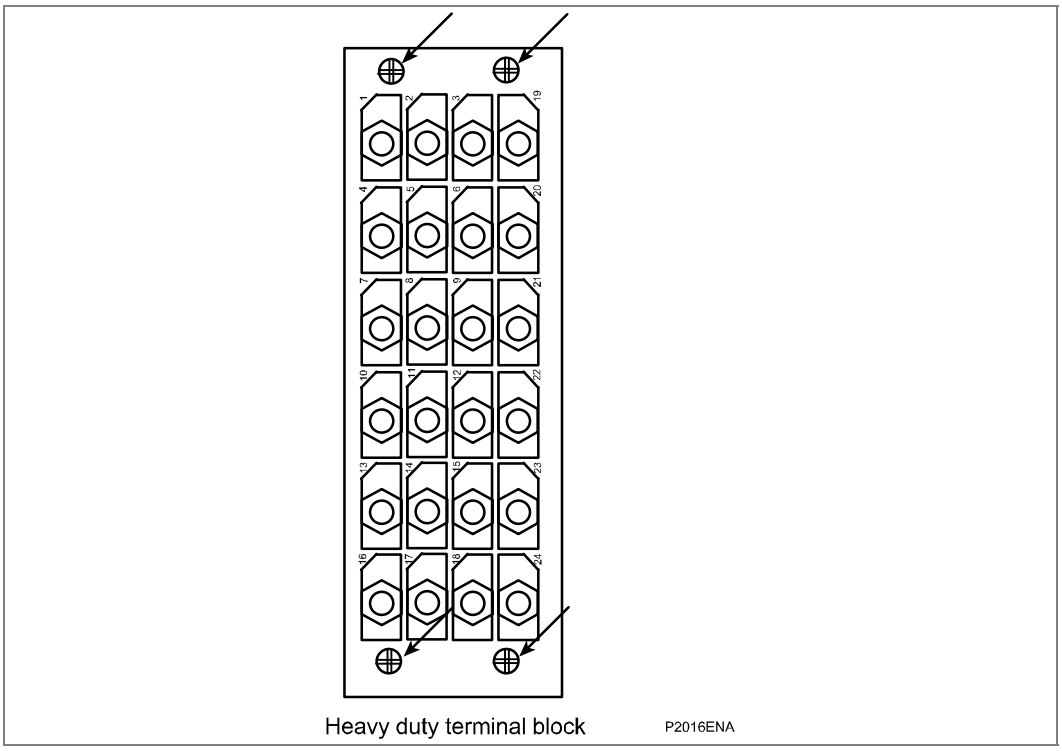

Figure 2 - Location of securing screws for heavy duty terminal blocks

5.1.3 Insulation

Insulation resistance tests are only necessary during commissioning if it is required for them to be done and they haven't been performed during installation.

Isolate all wiring from the earth and test the insulation with an electronic or brushless insulation tester at a dc voltage not exceeding 500 V. Terminals of the same circuits should be temporarily connected together.

The main groups of relay terminals are:

- Voltage transformer circuits
- Current transformer circuits
- Auxiliary voltage supply
- Field voltage output and opto-isolated control inputs
- Relay contacts
- First rear EIA(RS)485 communication port
- Current loop (analogue) inputs and outputs (CLIO)
- Case earth

The insulation resistance should be greater than 100 MΩ at 500 V.

On completion of the insulation resistance tests, ensure all external wiring is correctly reconnected to the unit.

5.1.4 External Wiring

Check that the external wiring is correct to the relevant relay diagram or scheme diagram. The relay diagram number appears on the rating label under the top access cover on the

front of the relay. The corresponding connection diagram will have been supplied with the Schneider Electric order acknowledgement for the relay.

If a MMLG or P991 test block is provided, the connections should be checked against the scheme (wiring) diagram. It is recommended that the supply connections are to the live side of the test block (colored orange with the odd numbered terminals (1, 3, 5, 7 etc.)). The auxiliary supply is normally routed via terminals 13 (supply positive) and 15 (supply negative), with terminals 14 and 16 connected to the relay's positive and negative auxiliary supply terminals respectively. However, check the wiring against the schematic diagram for the installation to ensure compliance with the customer's normal practice.

5.1.5 Watchdog Contacts

Use a continuity tester to check that the watchdog contacts are in the states given in Table 3 for a de-energized relay.

Terminals		Contact state	
		Relay De-energized	Relay Energized
F11 – F12 J11 - J12	(P341 40TE) (P341 60TE)	Closed	Open
F13 – F14 J13 - J14	(P341 40TE) (P341 60TE)	Open	Closed

Table 3 - Watchdog contact status

5.1.6 Auxiliary Supply

The relay can be operated from either a dc only or an ac/dc auxiliary supply depending on the relay's nominal supply rating. The incoming voltage must be within the operating range specified in Table 4.

Without energizing the relay, measure the auxiliary supply to ensure it is within the operating range.

Nominal supply rating		DC operating range	AC operating range
24 – 48 V dc	[–]	19 to 65 V	–
48 – 40 V dc	[40 - 100 V] ac	37 to 150 V	32 to 110 V
110 – 250 V dc	[100 - 240 V] ac	87 to 300 V	80 to 265 V

Table 4 - Operational range of auxiliary supply Vx

Note *The relay can withstand an ac ripple of up to 12% of the upper rated voltage on the dc auxiliary supply.*

Caution **Do not energize the relay using the battery charger with the battery disconnected as this can irreparably damage the relay's power supply circuitry.**

Caution **Energize the relay only if the auxiliary supply is within the operating range. If a MMLG or P991 test block is provided, it may be necessary to link across the front of the test plug to connect the auxiliary supply to the relay.**

5.2 With the Relay Energized

The following group of tests verify that the relay hardware and software is functioning correctly and should be carried out with the auxiliary supply applied to the relay.

Caution	**The current and voltage transformer connections must remain isolated from the relay for these checks. The trip circuit should also remain isolated to prevent accidental operation of the associated circuit breaker.**

5.2.1 Watchdog Contacts

Using a continuity tester, check the watchdog contacts are in the states given in Table 2 for an energized relay.

5.2.2 Liquid Crystal Display (LCD) Front Panel Display

The Liquid Crystal Display (LCD) is designed to operate in a wide range of substation ambient temperatures. For this purpose, the Px40 relays have an **LCD Contrast** setting. This allows the user to adjust how light or dark the characters displayed will be. The contrast is factory pre-set to account for a standard room temperature, however it may be necessary to adjust the contrast to give the best in-service display. To change the contrast, cell [09FF: **LCD Contrast**] at the bottom of the **CONFIGURATION** column can be incremented (darker) or decremented (lighter), as required.

Care	*Before applying a contrast setting, ensure that it will not render the display too light or dark so that menu text becomes unreadable. If such a mistake is made, it is possible to restore a visible display by downloading an S1 studio setting file, with the LCD Contrast set in the typical range of 7 - 11.*

5.2.3 Date and Time

Before setting the date and time, ensure that the factory-fitted battery isolation strip that prevents battery drain during transportation and storage has been removed. With the lower access cover open, the presence of the battery isolation strip can be checked by a red tab protruding from the positive side of the battery compartment. Lightly pressing the battery to prevent it falling out of the battery compartment, pull the red tab to remove the isolation strip.

The date and time should now be set to the correct values. The method of setting will depend on whether accuracy is being maintained via the optional Inter-Range Instrumentation Group standard B (IRIG-B) port on the rear of the relay.

5.2.3.1 With an IRIG-B Signal

If a satellite time clock signal conforming to IRIG-B is provided and the relay has the optional IRIG-B port fitted, the satellite clock equipment should be energized.

To allow the relay's time and date to be maintained from an external IRIG-B source cell [0804: **DATE and TIME**, **IRIG-B Sync**] must be set to **Enabled**.

Ensure the relay is receiving the IRIG-B signal by checking that cell [0805: **DATE and TIME**, **IRIG-B Status**] reads **Active**.

Once the IRIG-B signal is active, adjust the time offset of the universal co-ordinated time (satellite clock time) on the satellite clock equipment so that local time is displayed.

Check the time, date and month are correct in cell [0801: **DATE and TIME**, **Date/Time**]. The IRIG-B signal does not contain the current year so it will need to be set manually in this cell.

In the event of the auxiliary supply failing, with a battery fitted in the compartment behind the bottom access cover, the time and date will be maintained. Therefore, when the auxiliary supply is restored, the time and date will be correct and not need to be set again.

To test this, remove the IRIG-B signal, then remove the auxiliary supply from the relay. Leave the relay de-energized for approximately 30 seconds. On re-energization, the time in cell [0801: **DATE and TIME**, **Date/Time**] should be correct.

Reconnect the IRIG-B signal.

5.2.3.2 Without an IRIG-B Signal

If the time and date is not being maintained by an IRIG-B signal, ensure that cell [0804: **DATE and TIME**, **IRIG-B Sync**] is set to **Disabled**.

Set the date and time to the correct local time and date using cell [0801: **DATE and TIME**, **Date/Time**].

In the event of the auxiliary supply failing, with a battery fitted in the compartment behind the bottom access cover, the time and date will be maintained. Therefore when the auxiliary supply is restored the time and date will be correct and not need to be set again.

To test this, remove the auxiliary supply from the relay for approximately 30 seconds. On re-energization, the time in cell [0801: **DATE and TIME**, **Date/Time**] should be correct.

5.2.4 Light Emitting Diodes (LEDs)

On power-up, the green LED should switch on and stay on, indicating that the relay is healthy. The relay has non-volatile memory which stores the state (on or off) of the alarm, trip and, if configured to latch, user-programmable LED indicators when the relay was last energized from an auxiliary supply. Therefore these indicators may also illuminate when the auxiliary supply is applied.

If any of these LEDs are on, reset before proceeding with further testing. If the LED successfully reset (the LED switches off), there is no testing required for that LED because it is known to be operational.

5.2.4.1 Testing the Alarm and Out-Of-Service LEDs

The alarm and out of service LEDs can be tested using the **COMMISSION TESTS** menu column. Set cell [0F0D: **COMMISSION TESTS**, **Test Mode**] to **Contacts Blocked**. Check that the out of service LED illuminates continuously and the alarm LED flashes.

It is not necessary to return cell [0F0D: **COMMISSION TESTS**, **Test Mode**] to **Disabled** at this stage because the test mode will be required for later tests.

5.2.4.2 Testing the Trip LED

The trip LED can be tested by initiating a manual circuit breaker trip from the relay. However, the trip LED will operate during the setting checks performed later. Therefore no further testing of the trip LED is required at this stage.

5.2.4.3 Testing the User-Programmable LEDs

To test the user-programmable LEDs set cell [0F10: **COMMISSION TESTS**, **Test LEDs**] to **Apply Test**. Check that all 8 LEDs on the right-hand side of the relay illuminate.

5.2.5 Field Voltage Supply

The relay generates a field voltage of nominally 48 V that should be used to energize the opto-isolated inputs.

Measure the field voltage across terminals 7 and 9 on the terminal block given in Table 5. Check that the field voltage is within the range 40 V to 60 V when no load is connected and that the polarity is correct.

Repeat for terminals 8 and 10.

Supply rail	Terminals	
	P341 (40TE)	P341 (60TE)
+ve	F7 & F8	J7 & J8
–ve	F9 & F10	J9 & J10

Table 5 - Field voltage terminals

5.2.6 Input opto-isolators

This test checks that all the opto-isolated inputs are functioning correctly. The P341 relays have 8 opto-isolated inputs.

The opto-isolated inputs should be energized one at a time, see external connection diagrams in the Installation chapter for terminal numbers. Ensuring that the correct opto input nominal voltage is set in the **Opto Config** menu and correct polarity, connect the field supply voltage to the appropriate terminals for the input being tested. Each opto input also has selectable filtering. This allows use of a pre-set filter of ½ cycle which renders the input immune to induced noise on the wiring.

Note	*The opto-isolated inputs may be energized from an external dc auxiliary supply (e.g. the station battery) in some installations. Check that this is not the case before connecting the field voltage otherwise damage to the relay may result. If an external 24/27 V, 30/34 V, 48/54 V, 110/125 V, 220/250 V supply is being used it will be connected to the relay's optically isolated inputs directly. If an external supply is being used then it must be energized for this test but only if it has been confirmed that it is suitably rated with less than 12% ac ripple.*

The status of each opto-isolated input can be viewed using either cell [0020: **SYSTEM DATA**, Opto I/P Status] or [0F01: **COMMISSION TESTS**, **Opto I/P Status**], a 1 indicating an energized input and a **0** indicating a de-energized input. When each opto-isolated input is energized one of the characters on the bottom line of the display will change to indicate the new state of the inputs.

5.2.7 Output Relays

This test checks that all the output relays are functioning correctly. The P341 have 7 output relays. Ensure that the cell [0F0D: **COMMISSIONING TESTS**, **Test Mode**] is set to Contacts Blocked.

The output relays should be energized one at a time. To select output relay 1 for testing, set cell [0F0E: **COMMISSION TESTS**, **Test Pattern**] 00000000000000000000000000000001.

Connect a continuity tester across the terminals corresponding to output relay 1 as given in external connection diagram (*P341/EN IN*).

To operate the output relay set cell [0F0F: **COMMISSION TESTS**, **Contact Test**] to **Apply Test**. Operation will be confirmed by the continuity tester operating for a normally open contact and ceasing to operate for a normally closed contact. Measure the resistance of the contacts in the closed state.

Reset the output relay by setting cell [0F0F: **COMMISSION TESTS**, **Contact Test**] to **Remove Test**.

Note	*Ensure the thermal ratings of anything connected to the output relays during the contact test procedure is not exceeded by the associated output relay being operated for too long. It is therefore advised that the time between application and removal of contact test is kept to the minimum.*

Repeat the test for the rest of the relays

Return the relay to service by setting cell [0F0D: **COMMISSION TESTS**, **Test Mode**] to Disabled.

5.2.8 Current Loop Inputs

This test checks that all the current loop (analogue) inputs are functioning correctly and is only performed on relays with the CLIO (current loop input output) board fitted.

Relay terminal connections can be found by referring to the connection diagrams in the Installation chapter. Note that for the current loop inputs the physical connection of the 0-1 mA input is different from that of the 0-10, 0-20 and 4-20 mA inputs, as shown in the connection diagrams.

An accurate dc current source can be used to apply various current levels to the current loop inputs. Another approach is to use the current loop output as a convenient and flexible dc current source to test the input protection functionality. Externally the current loop outputs can be fed into their corresponding current loop inputs. Then by applying a certain level of analogue signal, such as VA, to the relay the required dc output level can be obtained from the current loop output which is feeding the current loop input.

Enable the current loop input to be tested. Set the CLIx minimum and maximum settings and the CLIx Input type for the application.

Apply a dc current to the relay current loop input at 50% of the CLI input maximum range, 0.5 mA (0-1 mA CLI), 5 mA (0-10 mA CLI) or 10 mA (0-20, 4-20 mA CLI).

Check the accuracy of the current loop input using the **MEASUREMENTS 3** – **CLIO Input** 1/2/3/4 column of the menu. The display should show (CLIx maximum + CLIx minimum)/2 ±1% full scale accuracy.

5.2.9 Current Loop Outputs

This test checks that all the current loop (analogue) outputs are functioning correctly and is only performed on relays with the CLIO board fitted.

Relay terminal connections can be found by referring to the connection diagrams in the Installation chapter.

Note	*The current loop outputs physical connection of the 0-1 mA output is different from that of the 0-10, 0-20 and 4-20 mA outputs, as shown in the connection diagrams.*

Enable the current loop output to be tested. Set the CLOx parameter, CLOx minimum and maximum settings and the CLOx Output type for the application. Apply the appropriate analogue input parameter to the relay equals to (CLOx maximum + CLOx minimum)/2. The current loop output should be at 50% of its maximum rated output. Using a precision resistive current shunt together with a high-resolution voltmeter, check that the current loop output is at 50% of its maximum rated output, 0.5 mA (0-1 mA CLO), 5 mA (0-10 mA CLO) or 10 mA (0-20, 4-20 mA CLO). The accuracy should be within ±0.5% of full scale + meter accuracy.

5.2.10 First Rear Communications Port

This test should only be performed where the relay is to be accessed from a remote location and will vary depending on the communications standard being adopted.

It is not the intention of the test to verify the operation of the complete system from the relay to the remote location, just the relay's rear communications port and any protocol converter necessary.

5.2.10.1 Courier Communications

If a K-Bus to RS232 KITZ protocol converter is installed, connect a portable PC running the appropriate software to the incoming (remote from relay) side of the protocol converter.

If a KITZ protocol converter is not installed, it may not be possible to connect the PC to the type installed. In this case a KITZ protocol converter and portable PC running appropriate software should be temporarily connected to the relay's K-Bus port. The terminal numbers for the relay's K-Bus port are given in Table 6. However, as the installed protocol converter is not being used in the test, only the correct operation of the relay's K-Bus port will be confirmed.

Connection		Terminal	
K-Bus	**Modbus or VDEW or DNP3.0**	**P341 (40TE)**	**P341 (60TE)**
Screen	Screen	F16	J16
1	+ve	F17	J17
2	–ve	F18	J18

Table 6 - EIA(RS)485 terminals

Ensure that the communications baud rate and parity settings in the application software are set the same as those on the protocol converter (usually a KITZ but could be a SCADA RTU). The relay's Courier address in cell [0E02: **COMMUNICATIONS**, **Remote Address**] must be set to a value between 1 and 254.

Check that communications can be established with this relay using the portable PC.

If the relay has the optional fiber optic communications port fitted, the port to be used should be selected by setting cell [0E07: **COMMUNICATIONS**, **Physical Link**] to Fiber Optic. Ensure that the relay address and baud rate settings in the application software are set the same as those in cell [0E04 **COMMUNICATIONS**, **Baud Rate**] of the relay. Check that, using the Master Station, communications with the relay can be established.

5.2.10.2 IEC 60870-5-103 (VDEW) Communications

If the relay has the optional fiber optic communications port fitted, the port to be used should be selected by setting cell [0E07: **COMMUNICATIONS**, **Physical Link**] to **Fiber Optic** or **EIA(RS)485**.

IEC 60870-5-103/VDEW communication systems are designed to have a local Master Station and this should be used to verify that the relay's fiber optic or EIA(RS)485 port, as appropriate, is working.

Ensure that the relay address and baud rate settings in the application software are set the same as those in cells [0E02: **COMMUNICATIONS**, **Remote Address**] and [0E04: COMMUNICATIONS, Baud Rate] of the relay.

Check that, using the Master Station, communications with the relay can be established.

5.2.10.3 DNP3.0 Communications

Connect a portable PC running the appropriate DNP3.0 Master Station Software to the relay's first rear EIA(RS)485 port via an EIA(RS)485 to EIA(RS)232 interface converter. The terminal numbers for the relay's EIA(RS)485 port are given in Table 6.

Ensure that the relay address, baud rate and parity settings in the application software are set the same as those in cells [0E02: **COMMUNICATIONS**, **Remote address**], [0E04: COMMUNICATIONS, Baud Rate] and [0E05: **COMMUNICATIONS**, **Parity**] of the relay.

Check that communications with this relay can be established.

If the relay has the optional fiber optic communications port fitted, the port to be used should be selected by setting cell [0E07: **COMMUNICATIONS**, **Physical Link**] to **Fiber Optic**. Ensure that the relay address and baud rate settings in the application software are set the same as those in cell [0E04: COMMUNICATIONS, Baud Rate] of the relay. Check that, using the Master Station, communications with the relay can be established.

5.2.10.4 IEC 61850 Communications

Connect a portable PC running the appropriate IEC 61850 Master Station Software or MMS browser to the relay's Ethernet port (RJ45 or ST fiber optic connection). The terminal numbers for the relay's Ethernet port are given in Table 7.

Configuration of the relay IP parameters (IP Address, Subnet Mask, Gateway) and SNTP time synchronization parameters (SNTP Server 1, SNTP Server 2) is performed by the IED Configurator tool, so if these parameters are not available via an SCL file, they must be configured manually.

If the assigned IP address is duplicated elsewhere on the same network, the remote communications will operate in an indeterminate way. However, the relay will check for a conflict on every IP configuration change and at power up. An alarm will be raised if an IP conflict is detected. The relay can be configured to accept data from networks other than the local network by using the 'Gateway' setting.

Check that communications with this relay can be established.

In order to communicate with an IEC 61850 IED on Ethernet, it is necessary only to know its IP address. This can then be configured into either:

- An IEC 61850 "client" (or master), for example a PACiS computer (C264) or HMI, or
- An "MMS browser", with which the full data model can be retrieved from the IED, without any prior knowledge

Setting changes (such as protection settings) are not supported in the current IEC 61850 implementation. In order to keep this process as simple as possible, such setting changes are done using S1 Studio Settings & Records program. This can be done as previously using the front port serial connection of the relay, or over the Ethernet link if preferred (this is known as "tunneling"). See SCADA Communications chapter, *P341/EN SC* for more information on IEC 61850.

The connector for the Ethernet port is a shielded RJ-45. Table 7 shows the signals and pins on the connector.

Pin	Signal name	Signal definition
1	TXP	Transmit (positive)
2	TXN	Transmit (negative)
3	RXP	Receive (positive)
4	-	Not used
5	-	Not used

Pin	Signal name	Signal definition
6	RXN	Receive (negative)
7	-	Not used
8	-	Not used

Table 7 - Signals on the Ethernet connector

5.2.11 Second Rear Communications Port

This test should only be performed where the relay is to be accessed from a remote location and will vary depending on the communications standard being adopted.

It is not the intention of the test to verify the operation of the complete system from the relay to the remote location, just the relay's rear communications port and any protocol converter necessary.

5.2.11.1 K-Bus Configuration

If a K-Bus to EIA(RS)232 KITZ protocol converter is installed, connect a portable PC running the appropriate software (e.g. S1 studio or PAS&T) to the incoming (remote from relay) side of the protocol converter.

If a KITZ protocol converter is not installed, it may not be possible to connect the PC to the relay installed. In this case a KITZ protocol converter and portable PC running appropriate software should be temporarily connected to the relay's second rear communications port configured for K-Bus. The terminal numbers for the relay's K-Bus port are given in Table 8. However, as the installed protocol converter is not being used in the test, only the correct operation of the relay's K-Bus port will be confirmed.

Pin*	Connection
4	EIA485 – 1 (+ ve)
7	EIA485 – 2 (- ve)

Note ** - All other pins unconnected.*

Table 8 - 2nd rear communications port K-Bus terminals

Ensure that the communications baud rate and parity settings in the application software are set the same as those on the protocol converter (usually a KITZ but could be a SCADA RTU). The relay's Courier address in cell [0E90: **COMMUNICATIONS**, **RP2 Address**] must be set to a value between 1 and 254. The second rear communication's port configuration [0E88: **COMMUNICATIONS RP2 Port Config**] must be set to K-Bus.

Check that communications can be established with this relay using the portable PC.

5.2.11.2 EIA(RS)485 Configuration

If an EIA(RS)485 to EIA(RS)232 converter (Schneider Electric CK222) is installed, connect a portable PC running the appropriate software (e.g. S1 studio) to the EIA(RS)232 side of the converter and the second rear communications port of the relay to the EIA(RS)485 side of the converter.

The terminal numbers for the relay's EIA(RS)485 port are given in Table 8.

Ensure that the communications baud rate and parity settings in the application software are set the same as those in the relay. The relay's Courier address in cell [0E90: **COMMUNICATIONS**, **RP2 Address**] must be set to a value between 1 and 254. The second rear communication's port configuration [0E88: **COMMUNICATIONS RP2 Port Config**] must be set to **EIA(RS)485**.

Check that communications can be established with this relay using the portable PC.

5.2.11.3 EIA(RS)232 Configuration

Connect a portable PC running the appropriate software (e.g. S1 studio) to the rear EIA(RS)232 port of the relay.

Note	*The EIA(RS)232 port is actually compliant to EIA(RS)574; the 9-pin version of EIA(RS)232, see www.tiaonline.org*

The second rear communications port connects via the 9-way female D-type connector (SK4). The connection is compliant to EIA(RS)574.

Pin	Connection
1	No Connection
2	RxD
3	TxD
4	DTR#
5	Ground
6	No Connection
7	RTS#
8	CTS#
9	No Connection
Note	*# - These pins are control lines for use with a modem.*

Table 9 - Second rear communications port EIA(RS)232 terminals

Connections to the second rear port configured for EIA(RS)232 operation can be made using a screened multi-core communication cable up to 15 m long, or a total capacitance of 2500 pF. The cable should be terminated at the relay end with a 9-way, metal shelled, D-type male plug. The terminal numbers for the relay's EIA(RS)232 port are given in Table 9.

Ensure that the communications baud rate and parity settings in the application software are set the same as those in the relay. The relay's Courier address in cell [0E90: **COMMUNICATIONS**, **RP2 Address**] must be set to a value between **1** and **254**. The second rear communication's port configuration [0E88: **COMMUNICATIONS RP2 Port Config**] must be set to **EIA(RS)232**.

Check that communications can be established with this relay using the portable PC.

5.2.12 Current Inputs

This test verifies that the accuracy of current measurement is within the acceptable tolerances.

All relays will leave the factory set for operation at a system frequency of 50 Hz. If operation at 60 Hz is required then this must be set in cell [0009: **SYSTEM DATA**, **Frequency**].

Apply current equal to the line current transformer secondary winding rating to each current transformer input of the corresponding rating in turn, checking its magnitude using a multimeter. Refer to Table 10 for the corresponding reading in the relay's **MEASUREMENTS 1** or **MEASUREMENTS 3** columns, as appropriate, and record the value displayed.

Menu cell	Apply current to			
	P341 (40TE)		P341 (60TE)	
	1 A Line CT	5 A Line CT	1 A CT's	5 A CT's
[0201: MEASUREMENTS 1, IA Magnitude]	C3 – C2	C1 – C2	D3 - D2	D1 - D2
[0203: MEASUREMENTS 1, IB Magnitude]	C6 – C5	C4 – C5	D6 - D5	D4 - D5
[0205: MEASUREMENTS 1, IC Magnitude]	C9 – C8	C7 – C8	D9 - D8	D7 - D8
[020B: MEASUREMENTS 1, ISEF Magnitude]	C15 – C14	C13 – C14	D15 - D14	D13 - D14

Table 10 - Current input terminals

The measured current values displayed on the relay LCD or a portable PC connected to the front communication port will either be in primary or secondary Amperes. If cell [0D02: **MEASURE'T SETUP**, **Local Values**] is set to Primary, the values displayed should be equal to the applied current multiplied by the corresponding current transformer ratio set in the CT and VT RATIOS menu column (see Table 11). If cell [0D02: **MEASURE'T SETUP**, **Local Values**] is set to Secondary, the value displayed should be equal to the applied current.

Note	*If a PC connected to the relay via the rear communications port is being used to display the measured current, the process will be similar. However, the setting of cell [0D03: **MEASURE'T SETUP**, **Remote Values**] will determine whether the displayed values are in primary or secondary Amperes.*

The measurement accuracy of the relay is ±1%. However, an additional allowance must be made for the accuracy of the test equipment being used.

Menu cell	Corresponding CT Ratio (in 'VT and CT RATIO column (0A) of menu)
[0201: MEASUREMENTS 1, IA Magnitude]	[0A07: Phase CT Primary] [0A08: Phase CT Sec'y]
[0203: MEASUREMENTS 1, IB Magnitude]	
[0205: MEASUREMENTS 1, IC Magnitude]	
[0401: MEASUREMENTS 3, IA-2 Magnitude]	
[0403: MEASUREMENTS 3, IB-2 Magnitude]	
[0405: MEASUREMENTS 3, IC-2 Magnitude]	
[0207: MEASUREMENTS 1, IN Measured Mag]	[0A09: E/F CT Primary] [0A0A: E/F CT Sec'y]
[020B: MEASUREMENTS 1, ISEF Magnitude]	[0A0B: SEF CT Primary] [0A0C: SEF CT Sec'y]

Table 11 - CT ratio settings

5.2.13 Voltage Inputs

This test verifies the accuracy of voltage measurement is within the acceptable tolerances.

Apply rated voltage to each voltage transformer input in turn, checking its magnitude using a multimeter. Refer to Table 12 for the corresponding reading in the relay's MEASUREMENTS 1 column and record the value displayed.

Menu cell	Voltage applied to	
	P341 (40TE)	P341 (60TE)
[021A: MEASUREMENTS 1, VAN Magnitude]	C19 – C22	D19 - D22
[021C: MEASUREMENTS 1, VBN Magnitude]	C20 – C22	D20 - D22

Menu cell	Voltage applied to	
	P341 (40TE)	P341 (60TE)
[021E: MEASUREMENTS 1, VCN Magnitude]	C21 – C22	D21 - D22
[0220: MEASUREMENTS 1, VN Measured Mag]	C23 – C24	D23 - D24
[0270: MEASUREMENTS 1, C/S Voltage Mag]		E23 – E24 (P341 60TE case)

Table 12 - Voltage input terminals

The measured voltage values displayed on the relay LCD or a portable PC connected to the front communication port will either be in primary or secondary volts. If cell [0D02: **MEASURE'T SETUP**, **Local Values**] is set to Primary, the values displayed should be equal to the applied voltage multiplied by the corresponding voltage transformer ratio set in the VT and CT RATIOS menu column (see Table 13). If cell [0D02: **MEASURE'T SETUP**, **Local Values**] is set to '**Secondary'**, the value displayed should be equal to the applied voltage.

Note	*If a PC connected to the relay via the rear communications port is being used to display the measured voltage, the process will be similar. However, the setting of cell [0D03: **MEASURE'T SETUP**, **Remote Values**] will determine whether the displayed values are in primary or secondary Volts.*

The measurement accuracy of the relay is ±1%. However, an additional allowance must be made for the accuracy of the test equipment being used.

Menu cell	Corresponding VT Ratio (in 'VT and CT RATIO column (0A) of menu)
[021A: MEASUREMENTS 1, VAN Magnitude]	[0A01: Main VT Primary] [0A02: Main VT Sec'y]
[021C: MEASUREMENTS 1, VBN Magnitude]	
[021E: MEASUREMENTS 1, VCN Magnitude]	
[0220: MEASUREMENTS 1, VN Measured Mag]	[0A05: VN VT Primary] [0A06: VN VT Sec'y]
[0270: MEASUREMENTS 1, C/S Voltage Mag]	[0A16: C/S VT Prim'y] (P341 60TE case) [0A17: C/S VT Sec'y]

Table 13 - VT ratio settings

6 SETTING CHECKS

The setting checks ensure that all of the application-specific relay settings (i.e. both the relay's function and programmable scheme logic settings) for the particular installation have been correctly applied to the relay.

If the application-specific settings are not available, ignore Sections 6.1 and 0.

Note	*The trip circuit should remain isolated during these checks to prevent accidental operation of the associated circuit breaker.*

6.1 Apply Application-Specific Settings

There are two methods of applying the settings:

- Transferring them from a pre-prepared setting file to the relay using a portable PC running the appropriate software (S1 Studio) via the relay's front EIA(RS)232 port, located under the bottom access cover, or rear communications port (with a KITZ protocol converter connected). This method is preferred for transferring function settings as it is much faster and there is less margin for error. If Programmable Scheme Logic (PSL) other than the default settings with which the relay is supplied is to be used then this is the only way of changing the settings.
- If a setting file has been created for the particular application and provided on a diskette, this will further reduce the commissioning time and should always be the case where application-specific PSL is to be applied to the relay.
- Enter the settings manually using the relay's operator interface. This method is not suitable for changing the PSL.

Caution	**It is essential that where the installation needs application-specific PSL, that the appropriate .psl file is downloaded (sent) to the relay, for each and every setting group that will be used. If the user fails to download the required .psl file to any setting group that may be brought into service, then factory default PSL will still be resident. This may have severe operational and safety consequences.**

6.2 Check Application-Specific Settings

Carefully check applied settings against the required application-specific settings to ensure they have been entered correctly. However, this is not considered essential if a customer-prepared setting file has been transferred to the relay using a portable PC.

There are two methods of checking the settings:

- Extract the settings from the relay using a portable PC running the appropriate software (S1 Studio) via the front EIA(RS)232 port, located under the bottom access cover, or rear communications port (with a KITZ protocol converter connected). Compare the settings transferred from the relay with the original written application-specific setting record. (For cases where the customer has only provided a printed copy of the required settings but a portable PC is available).
- Step through the settings using the relay's operator interface and compare them with the original application-specific setting record.

Unless previously agreed to the contrary, the application-specific PSL will not be checked as part of the commissioning tests.

Due to the versatility and possible complexity of the PSL, it is beyond the scope of these commissioning instructions to detail suitable test procedures. Therefore, when PSL tests must be performed, written tests that satisfactorily demonstrate the correct operation of the application-specific scheme logic should be devised by the Engineer who created it. These tests should be provided to the Commissioning Engineer with the diskette containing the PSL setting file.

6.3 Demonstrate Correct Relay Operation

Tests 4.2.9 and 4.2.10 have already demonstrated that the relay is within calibration, therefore the purpose of these tests is as follows:

- To verify correct operation of the Rate of change of frequency protection (df/dt) (P341, V3x/7x software).
- To verify correct operation of the voltage vector shift protection (P341, V3x/7x software).
- To verify correct operation of the phase overcurrent protection (P341, V3x/7x software). It is not considered necessary to check the boundaries of operation where cell [3502: **GROUP 1 OVERCURRENT**, **I>1 Directional**] is set to **Directional Fwd** or **Directional Rev** as tests detailed already confirm the correct functionality between current and voltage inputs, processor and outputs, and earlier checks confirmed the measurement accuracy is within the stated tolerance.
- To verify correct operation of the dynamic line rating protection (P341, V7x software).
- To verify correct assignment of the trip contacts, by monitoring the response to a selection of fault injections.

6.3.1 Rate of Change of Frequency Protection

The rate of change of frequency function should be tested in the P341 if used.

To make sure that there is no impact from other protection during the test, all other protection elements should be disabled in the relay's **CONFIGURATION** column except **df/dt** protection. Make a note of which elements need to be re-enabled after testing.

6.3.1.1 Connect the Test Circuit

Determine which output relay has been selected to operate when the **df/dt>1 Trip**, **df/dt>1 Under F and df/dt>1 Over F** occur by viewing the relay's PSL.

The PSL can only be changed using the appropriate software (S1 Studio).

If the df/dt>1 Trip protection signal is not mapped directly to an output relay in the PSL, the default PSL can be used to check the operation of the protection function. In the default PSL, relay 3 is the designated protection trip contact and DDB 928 df/dt>1 Trip is assigned to this contact. In the default PSL relay 3 is set to operate the Any Trip signal (DDB 674) which initiates the trip LED.

The associated terminal numbers can be found from the external connection diagrams in the Installation chapter.

Connect the output relays so that their operation will trip the test set and stop the timer.

Connect the voltage outputs of the test set to the 'VA, VB, VC, VN' phase voltage inputs of the relay (terminals C19, C20, C21 and C22 (40TE case) and D19, D20, D21 and D22 (60TE case)).

The assumptions for the test set are:

- df/dt pulse ramping function is provided to test the pick-up of the four stages
- A timer is provided to test the operation time of the df/dt stages

Df/dt Tripping	DDB 928 : df/dt>1 Trip DDB 929 : df/dt>2 Trip DDB 930 : df/dt>3 Trip DDB 931 : df/dt>4 Trip
Df/dt>1 low/high frequency	DDB 936 : df/dt> Under F DDB 937 : df/dt> Over F
Df/dt Starting	DDB 1184 : df/dt>1 Start DDB 1185 : df/dt>2 Start DDB 1186 : df/dt>3 Start DDB 1187 : df/dt>4 Start

6.3.1.2 Perform the df/dt Pick-Up Value Test

To make sure there is no impact from other df/dt elements, ensure that only the df/dt>1 stage to be tested is enabled, all other stages are disabled.

The pick-up value and operating time test of df/dt>1 and the df/dt>1 frequency band are described in the following tests based on the default settings:

Operating Mode = Fixed Window, df/dt Avg Cycles = 3, df/dt Iterations = 2, df/dt>1 Status = Enabled, df/dt>1 Setting = 0.2 Hz/s, df/dt>1 Dir'n = Both, df/dt>1 Time = 0.5 s, df/dt>1 L/H = Enabled, df/dt>1 f Low = 49.5 Hz and df/dt f High = 50.5 Hz. The settings associated with the rate of change of frequency protection are described in the Settings chapter.

Note	*During **df/dt>1 Trip** tests the start frequency and stop frequency for the rate of change of frequency must be outside the range of the setting **df/dt>1 f Low** and **df/dt>1 f High**.*

If an LED has been assigned to give the df/dt>1 Start (DDB 1184) information, this may be used to indicate correct operation. If not, monitor options will need to be used - see the next paragraph.

Go to the **COMMISSION TESTS** column in the menu, scroll down and change cell [0F05: **Monitor Bit 1**] to 1184. Cell [0F04: **Test Port Status**] will now appropriately indicate the set or reset of the bit that now represents df/dt>1 Start DDB with the rightmost bit representing df/dt>1 Start. From now on you should monitor the indication of [0F04: Test Port Status].

Apply a df/dt ramping pulse in the positive and negative direction as described in Table 14.

Df/dt pick-up test set settings for pulse ramping	
Parameters	Setting
Rest/Start Frequency	50 Hz
Pre-fault time	1s
Fault time	1.5 x (df/dt>1 Time setting)
Df/dt change from	df/dt>1 Setting/2
Df/dt change to	2 x (df/dt>1 Setting)

Table 14 - Df/dt pick-up test set settings for pulse ramping

Check that the pick-up value recorded by the test set is within the range,

Fixed Window

Pick-up: Setting ±0.05 Hz/s or ±3% whichever is greater

Rolling Window

Pick-up: Setting ±0.01 Hz/s or ±3% whichever is greater

6.3.1.3 Perform the df/dt Time Test

Ensure that the timer is reset.

Apply test voltages using two states to test the operating time as shown in Table 15 and note the time when the timer stops.

Note	*During the test, for **df/dt>1 Trip** the start frequency and stop frequency for the rate of change of frequency must be outside of the range of the setting **df/dt>1 f Low** and **df/dt>1 f High***

df/dt timer test set settings			
	State 1 (Pre-fault)	State 2 (Fault)	
VA-N	63.51 V	63.51 V	
	0.00 °	0.00 °	
	50.000 Hz	50.000 Hz	
VB-N	63.51 V	63.51 V	
	-120.00 °	-120.00 °	
	50.000 Hz	50.000 Hz	
VC-N	63.51 V	63.51 V	
	120.00 °	120.00 °	

df/dt timer test set settings			
Frequency	50.000 Hz	From: 50.000 Hz	to relay operation
Rate of Change of Frequency	0	2 x (df/dt>1 Setting)	
Duration	1.5*(df/dt>1 Time setting) s	Triggered by contact.	

Table 15 - df/dt timer test set settings

Check that the operating time recorded by the timer is within the range,

Fixed Window

Setting ±2% or ± (40+20*X*Y) ms

Rolling Window

Setting ±2% or ± (60+20*X+5*Y) ms

X = **df/dt Avg Cycles**

Y = **df/dt Iterations**

6.3.1.4 Perform the df/dt>1 Frequency Band Test

For the df/dt>1 stage only, the user can select a deadband around the nominal frequency, within which this element is blocked. The dead band is defined with high and low frequency settings **df/dt>1 f Low** and **df/dt> f High**.

If an LED has been assigned to give the df/dt>1 Under F and df/dt>1 Over F (DDB 936, 937) information, this may be used to indicate correct operation when the frequency is under or over the df/dt>1 frequency band as set by the settings **df/dt>1 f Low** and **df/dt>1 f High**. If not, monitor options will need to be used – see the next paragraph.

Go to the **COMMISSION TESTS** column in the menu, scroll down and change cell [0F05: **Monitor Bit 1**] to 936 and [0F05: **Monitor Bit 2**] to 937. Cell [0F04: **Test Port Status**] will now appropriately indicate the set or reset of the bits that now represents DDBs df/dt>1 Under F and df/dt>1 Over F with the rightmost bit representing df/dt>1 Under F. From now on you should monitor the indication of [0F04: Test Port Status].

Apply test voltages as shown in Table 16 for the frequency band test.

Df/dt frequency band test set settings for ramping		
State1	df/dt>1 f Low pick-up value test	
	Frequency from	1.2 x df/dt>1 f High
	Frequency to	0.8 x df/dt>1 f Low
	dt	10ms
	df/dt	2 x (df/dt>1 Setting)
	Duration	Triggered by contact.
State2	df/dt>1 f High pick-up value test	
	Frequency from	0.8 x df/dt>1 f Low
	Frequency to	1.2 x df/dt>1 f High
	dt	10ms
	df/dt	2 x (df/dt>1 Setting)
	Duration	Triggered by contact.

Table 16 - df/dt frequency band test set settings for ramping

Check that the pick-up value for **df/dt>1 f Low** and **df/dt>1 f High** recorded by the test set are within the range, Setting ±2% or ±80 mHz whichever is greater

6.3.2 Voltage Vector Shift Protection

The voltage vector shift function should be tested in the P341 if used.

To make sure that there is no impact from other protection during the test, all other protection elements should be disabled in the relay's **CONFIGURATION** column except V **Vector Shift** protection. Make a note of which elements need to be re-enabled after testing.

6.3.2.1 Connect the Test Circuit

Determine which output relay has been selected to operate when a **V Shift Trip** occurs by viewing the relay's programmable scheme logic.

The PSL can only be changed using the appropriate software (S1 Studio).

If the V Shift Trip protection signal is not mapped directly to an output relay in the programmable scheme logic the default PSL can be used to check the operation of the protection function. In the default PSL relay 3 is the designated protection trip contact and **DDB933 V Shift trip** is assigned to this contact. Note, in the default PSL relay 3 is set to operate the **Any Trip signal (DDB 674)** which initiates the trip LED. In the default PSL **DDB933 V Shift trip** is also assigned to LED4 which could be used to indicate the operation.

The associated terminal numbers can be found from the external connection diagram in the Installation chapter.

Connect the output relays so that their operation will trip the test set and stop the timer.

Connect the voltage outputs of the test set to the 'VA, VB, VC, VN' phase voltage inputs of the relay (terminals C19, C20, C21 and C22 (40TE case) and D19, D20, D21 and D22 (60TE case)).

6.3.2.2 Perform the Test

Ensure that the timer is reset. Adjust the voltage output of the test set and use two states to test the operating time as shown in Table 17:

Voltage vector shift test set settings		
	State1 (Pre-fault)	**State2 (Fault)**
VA-N	63.51 V	63.51 V
	0.00 °	0.00 °+2 x setting
	50.000 Hz	50.000 Hz
VB-N	63.51 V	63.51 V
	-120.00 °	-120.00 °+2 x setting
	50.000 Hz	50.000 Hz
VC-N	63.51 V	63.51 V
	120.00 °	120.00 °+2 x setting
Frequency	50.000 Hz	50.000 Hz
Duration	5 s	Triggered by contact.

Table 17 - Voltage vector shift test set settings

Check that the operating time recorded by the timer is within the range 20ms ±10ms.

6.3.3 Overcurrent Protection

To avoid spurious operation of any other protection elements all protection elements except the overcurrent protection should be disabled for the duration of the overcurrent element tests. This is done in the relay's **CONFIGURATION** column. Make a note of which elements need to be re-enabled after testing.

Determine which output relay has been selected to operate when an I>1 trip occurs by viewing the relay's PSL.

The PSL can only be changed using the appropriate software (S1 Studio). If this software has not been available then the default output relay allocations will still be applicable.

If the trip outputs are phase-segregated (i.e. a different output relay allocated for each phase), the relay assigned for tripping on 'A' phase faults should be used.

If the I>1 Trip protection signal is not mapped directly to an output relay in the programmable scheme logic the default PSL can be used to check the operation of the protection function. In the default PSL relay 3 is the designated protection trip contact and DDB800I>1 Trip is assigned to this contact. Note, in the default PSL relay 3 is set to operate the Any Trip signal (DDB 674) which initiates the trip LED.

Three Pole Tripping	DDB 800 : I>1 Trip
Single Pole Tripping	DDB 801 : I>1 Trip A DDB 802 : I>1 Trip B DDB 803 : I>1 Trip C

The associated terminal numbers can be found either from the external connection diagram in section *P341/EN IN*.

Connect the output relay so that its operation will trip the test set and stop the timer. Connect the current output of the test set to the 'A' phase current transformer input of the relay (terminals C3 - C2 (1A, 40TE case), D3 - D2 (1A, 60TE case) (C1 - C2 (5A, 40TE case), D1 - D2 (5A, 60TE case)).

If [3524: GROUP 1 **OVERCURRENT**, **I>1 Direction**] is set to **Directional Fwd**, the current should flow out of terminal C2 (40TE case) or D2 (60TE case) but flow into C2 or D2 if set to **Directional Rev**. Also apply rated voltage to terminals C20 and C21 (40TE case) or D20 and D21 (60TE case).

Ensure that the timer will start when the current is applied to the relay.

Note	*If the timer does not start when the current is applied and stage 1 has been set for directional operation, the connections may be incorrect for the direction of operation set. Try again with the current connections reversed.*

6.3.3.1 Perform the Test

Ensure that the timer is reset.

Apply a current of twice the setting in cell [3527: GROUP 1 **OVERCURRENT**, **I>1 Current Set**] to the relay and note the time displayed when the timer stops.

Check the red trip led and yellow alarm led turns on when the relay operates. Check 'Alarms / Faults Present – Started Phase A, Tripped Phase A, Overcurrent Start I>1, Overcurrent Trip I>1' is on the display. Reset all alarms. Note, the trip led is initiated from operation of relay 3, the protection trip contact in the default PSL.

6.3.3.2 Check the Operating Time

Check that the operating time recorded by the timer is in the range shown in Table 18.

Note	*Except for the definite time characteristic, the operating times given in Table 18 are for a time multiplier or time dial setting of 1. Therefore, to obtain the operating time at other time multiplier or time dial settings, the time given in Table 18 must be multiplied by the setting of cell [352A: GROUP 1* ***OVERCURRENT****,* ***I>1 TMS****] for IEC and UK characteristics or cell [352B: GROUP 1* ***OVERCURRENT****,* ***Time Dial****] for IEEE and US characteristics.* *In addition, for definite time and inverse characteristics there is an additional delay of up to 0.02 second and 0.08 second respectively that may need to be added to the relay's acceptable range of operating times.* *For all characteristics, allowance must be made for the accuracy of the test equipment being used.*

Characteristic	Operating time at twice current setting and Time Multiplier/Time Dial setting of 1.0	
	Nominal (Seconds)	**Range (Seconds)**
DT	[3504: I>1 Time Delay] setting	Setting ±2%
IEC S Inverse	10.03	9.53 - 10.53
IEC V Inverse	13.50	12.83 - 14.18
IEC E Inverse	26.67	24.67 - 28.67
UK LT Inverse	120.00	114.00 - 126.00
IEEE M Inverse	3.8	3.61 – 3.99
IEEE V Inverse	7.03	6.68 – 7.38
IEEE E Inverse	9.52	9.04 - 10
US Inverse	2.16	2.05 – 2.27
US ST Inverse	12.12	11.51 – 12.73

Table 18 - Characteristic operating times for I>1

On completion of the tests any protection elements which were disabled for testing purposes must have their original settings restored in the **CONFIGURATION** column.

6.3.4 Dynamic Line Rating (DLR)

The Dynamic Line Rating (DLR) protection function should be tested in the P341 (version 7x software) if used. The DLR protection includes six trip stages (DLR I>1/2/3/4/5/6). It is only necessary to test the elements being used.

To avoid spurious operation of any other protection elements all protection elements except the DLR protection should be disabled for the duration of the DLR tests. This is done in the relay's **CONFIGURATION** column. Make a note of which elements need to be re-enabled after testing.

6.3.4.1 Connect the Test Circuit

Determine which output relay has been selected to operate when a DLR I>1/2/3/4/5/6 Trip (DDB 952-957) occurs by viewing the relay's PSL.

The PSL can only be changed using the appropriate software. If this software is not available then the default output relay allocations will still be applicable.

If the DLR I> I>1/2/3/4/5/6 Trip protection signals are not mapped directly to an output relay in the PSL the default PSL can be used to check the operation of the protection function. In the default PSL relay 3 is the designated protection trip contact and DLR I>1/2/3/4/5/6 Trip (DDB 952-957) are assigned to this contact. Note, in the default PSL relay 3 is set to operate the Any Trip signal (DDB 674) which initiates the trip LED.

The associated terminal numbers can be found from the external connection diagrams in *Installation* chapter.

Connect the output relay so that its operation will trip the test set and stop the timer.

6.3.4.2 DLR Test Set-Up (Weather Station Simulator)

The P341 under test or a separate dc source can be used to simulate the output from the weather station current loop output sensors, 0-1/0-10/0-20/4-20mA, for ambient temperature, wind velocity, wind direction and solar radiation. The P341 can be used to produce the mA outputs required by applying voltages to the voltage inputs (VA, VB, VC, VNeutral) in the relay and configuring the current loop outputs to these voltages with the amplitude of the voltages proportional to the mA required, see Table 19. The P341 current loop outputs can thus be set to produce the mA required which can be connected to the P341 current loop inputs, see. If the test set does not have 4 voltage outputs then the default wind velocity, wind direction, ambient temperature or solar radiation setting should be set to the test value instead of injecting a mA signal to the current loop input. If the Ambient Temp, Wind Velocity, Wind Direction or Solar Radiation settings (cells 4821/4831/4841/4851) are set to Disabled the relays uses the default values, Default Ambient T, Default Wind Vel, Default Wind Dir, Default Solar R (cells 4822/4832/4842/4852).

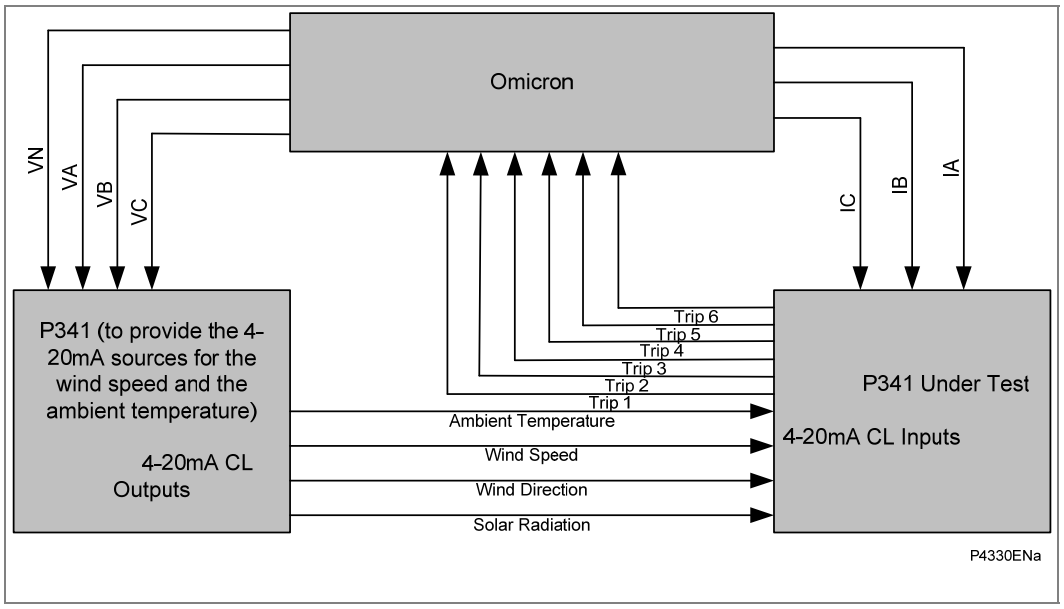

Figure 3 - DLR test set-up

Equipment	Simulating P341 (P341 settings)			Test P341		Secondary injection test set	
Settings	CLO channel	CLO type	CLO range	CLI channel	DLR Input configuration	Output channel	Converting function
Ambient Temp (AT)	CLO1	0-20 mA	0-80 V	CLI1	-40 - 50°C	VA	$\frac{80}{20}\cdot(4+\frac{16\cdot(AT+40)}{90})$
Wind Velocity (WV)	CLO2	0-20 mA	0-80 V	CLI2	0 - 60 m/s	VB	$\frac{80}{20}\cdot(4+\frac{16\cdot WV}{60})$
Wind Direction (WD)	CLO3	0-20 mA	0-80 V	CLI3	0 - 360°	VC	$\frac{80}{20}\cdot(4+\frac{16\cdot WD}{360})$
Solar Radiation (SR)	CLO4	0-20 mA	0-80 V	CLI4	0 – 2000 W	VN	$\frac{80}{20}\cdot(4+\frac{16\cdot SR}{2000})$

Table 19 - Test settings if using P341 CLO to derive mA for DLR testing

The abbreviations in Table 19 are:

- AT – Ambient Temperature
- WV – Wind Velocity
- WD – Wind Direction
- SR – Solar Radiation
- CLI – Current Loop Input
- CLO – Current Loop Output
- DLR – Dynamic Line Rating

The required current for Current Loop Input, m, can be calculated in Equation 1.

Equation 1 -

$$\frac{m-4}{20-4}=\frac{y-MIN}{MAX-MIN}$$

$$m=\left(4+\frac{16\cdot(y-MIN)}{MAX-MIN}\right)$$

The converting function for the injection test set output voltages can be calculated by multiplying ‘m’ with the factor 80 V/20 mA. The converting function can be calculated as shown in Figure 4.

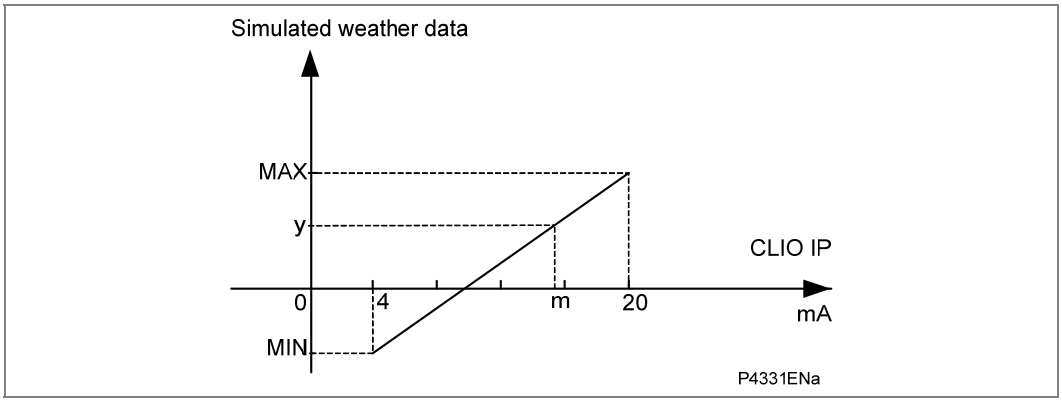

Figure 4 - CLO conversion

6.3.4.3 Check the Pick-Up and Drop-Off Settings

Ensure that the following **DYNAMIC RATING** settings are applied to the relay as shown in Table 20 below for Test 1 or Test 2 or Test 3. It is only necessary to perform one of the tests however more tests can be performed if necessary.

	Cell ref	Text string	Test 1	Test 2	Test 3
DLR Settings	4803	Conductor Type	Lynx	Lynx	Lynx
	480E	Solar Absorpt	0.95	0.5	0.5
	480F	Line Emissivity	0.95	0.5	0.5
	4810	Line Elevation	0 m	0 m	0 m
	4811	Line Azimuth Min	0°	0°	0°
	4812	Line Azimuth Max	0°	0°	0°
	4813	T Conductor Max	50°C	50°C	50°C
	4814	Ampacity Min	0.100 In	0.100 In	0.100 In
	4815	Ampacity Max	4.0 In	4.0 In	4.0 In
	4816	Drop-off Ratio	98%	98%	98%
	4817	Line Direction	0°	0°	0°
	4821	Ambient Temp	CLI1	CLI1	CLI1
	4822	Default Ambient T	2°C	2°C	2°C
	4823	Ambient T Corr	0°C	0°C	0°C
	4824	Ambient T Min	-40°C	-40°C	-40°C
	4825	Ambient T Max	50°C	50°C	50°C
	4826	Ambient T AvgSet	Disabled	Disabled	Disabled
	4828	AT Input Type	4-20 mA	4-20 mA	4-20 mA
	4829	Amb T I/P Min	-40°C	-40°C	-40°C
	482A	Amb T I/P Max	50°C	50°C	50°C
	482B	AT I< Alarm	Disabled	Disabled	Disabled
	4831	Wind Velocity	CLI2	CLI2	CLI2
	4832	Default Wind Vel	0.5 m/s	0.5 m/s	0.5 m/s
	4833	Wind Vel Corr	0	0	0
	4834	Wind Vel Min	0 m/s	0 m/s	0 m/s
	4835	Wind Vel Max	60 m/s	60 m/s	60 m/s
	4836	Wind Vel AvgSet	Disabled	Disabled	Disabled
	4837	WV Input Type	4-20 mA	4-20 mA	4-20 mA
	4838	WV I/P Minimum	0 m/s	0 m/s	0 m/s
	4839	WV I/P Maximum	60 m/s	60 m/s	60 m/s
	483A	WV I< Alarm	Disabled	Disabled	Disabled
	4841	Wind Direction	CLI3	CLI3	CLI3
	4842	Default Wind Dir	0°	0°	0°
	4843	Wind Dir Corr	0°	0°	0°
	4844	Wind Dir Min	0°	0°	0°
	4845	Wind Dir Max	360°	360°	360°
	4846	Wind Dir AvgSet	Disabled	Disabled	Disabled
	4848	WD Input Type	4-20 mA	4-20 mA	4-20 mA

	Cell ref	Text string	Test 1	Test 2	Test 3
	4849	WD I/P Minimum	0°	0°	0°
	484A	WD I/P Maximum	360°	360°	360°
	484B	WD I< Alarm	Disabled	Disabled	Disabled
	4851	Solar Radiation	CLI4	CLI4	CLI4
	4852	Default Solar R	0 W	0 W	0 W
	4853	Solar Rad Corr	0 W	0 W	0 W
	4854	Solar Rad Min	0 W	0 W	0 W
	4855	Solar Rad Max	2000 W	2000 W	2000 W
	4856	Solar Rad AvgSet	Disabled	Disabled	Disabled
	4858	SR Input Type	4-20 mA	4-20 mA	4-20 mA
	4859	SR I/P Minimum	0 W	0 W	0 W
	485A	SR I/P Maximum	2000 W	2000 W	2000 W
	485B	SR I< Alarm	Disabled	Disabled	Disabled
Sensor Inputs - Measurements 4	0520	Max Iac	0.2568 In (CIGRE), 0.2527 In (IEEE)	0.7446 In (CIGRE), 0.7310 In (IEEE)	1.598 In (CIGRE), 1.388 In (IEEE)
	0522	DLR Ambient Temp	30°C (65.778 V, 16.445 mA CLI)	15°C (55.111 V, 13.778 mA CLI)	-10°C (37.333 V, 9.333 mA CLI)
	0524	Wind Velocity	1.0 m/s (17.067 V, 4.267 mA CLI)	3.0 m/s (19.200 V, 4.800 mA CLI)	10.0 m/s (26.667 V, 6.667 mA CLI)
	0526	Wind Direction	23° (20.089 V, 5.022 mA CLI)	60° (26.667 V, 6.667 mA CLI)	90° (32.000 V, 8.000 mA CLI)
	0528	Solar Radiation	890 W (44.48 V, 11.12 mA CLI)	0 W (16 V, 4 mA CLI)	0 W (16 V, 4 mA CLI)
DLR Measurements - Measurements 4	0532	Effct wind angle	23° (CIGRE), 23° (IEEE)	60° (CIGRE), 60° (IEEE)	90° (CIGRE), 90° (IEEE)
	0534	Pc	20.069 (CIGRE), 19.712 (IEEE)	90.967 (CIGRE), 87.426 (IEEE)	451.135 (CIGRE), 340.039 (IEEE)
	0536	Pc, natural	0.0000 (CIGRE), 8.543 (IEEE)	0.0000 (CIGRE), 17.406 (IEEE)	0.0000 (CIGRE), 34.865 (IEEE)
	0538	Pc1, forced	0.0000 (CIGRE), 19.712 (IEEE)	0.0000 (CIGRE), 82.533 (IEEE)	0.0000 (CIGRE), 288.338 (IEEE)
	053A	Pc2, forced	20.069 (CIGRE), 18.899 (IEEE)	0.0000 (CIGRE), 87.426 (IEEE)	0.0000 (CIGRE), 340.039 (IEEE)
	053C	DLR Ampacity	0.2568 In (CIGRE), 0.2527 In (IEEE)	0.7446 In (CIGRE), 0.7310 In (IEEE)	1.598 In (CIGRE), 1.388 In (IEEE)
	053E	DLR Current ratio	100.0% (CIGRE), 100.0% (IEEE)	100.0% (CIGRE), 100.0% (IEEE)	100.0% (CIGRE), 100.0% (IEEE)

Table 20 - Dynamic line rating settings

If an LED has been assigned to give the DLR I>1 Start (DDB 954) information, this may be used to indicate correct operation. If not, monitor options will need to be used - see the next paragraph.

Go to the **COMMISSION TESTS** column in the menu, scroll down and change cell [0F05: **Monitor Bit 1**] to 954. Cell [0F04: **Test Port Status**] will now appropriately indicate the set or reset of the bit that now represents DLR I>1 Start DDB with the rightmost bit representing DLR I>1 Start. From now on you should monitor the indication of [0F04: Test Port Status].

The P341 under test or a separate dc source can be used to simulate the output from the weather station current loop output sensors, 0-1/0-10/0-20/4-20 mA, for ambient

temperature, wind velocity, wind direction and solar radiation as described above. Apply a dc mA signal or voltages/current to the relay VA/VB/VC/VN inputs, C19 - C20 - C21 - C22 (40TE case), D19 - D20 - D21 - D22 (60TE case) and the VNeutral input, C23 - C24 (40TE case), D23 - D24 (60TE case), proportional to the ambient temperature, wind velocity, wind direction and solar radiation (cell ref 0522, 0524, 0526, 0528) as indicated in the table above for Test 1 or Test 2 or Test 3 (See Measurements 1 for VAN/VBN/VCN Magnitude and VN Measured Mag). If any of the weather station inputs are not available then set the default ambient temperature or wind velocity or wind direction or solar radiation setting equal to the test value. Check that the 'Ambient Temp', 'Wind Velocity', 'Wind Direction' and 'Solar Radiation' values in the Measurements 4 menu are as shown in Table 20 above for Test 1 or Test 2 or Test 3.

Inject 0.2 In current into the IA/IB/IC inputs, C3 – C2, C6 – C5, C9 – C8 (1A, 40TE case), C1 – C2, C4 – C5, C7 – C8 (5A, 40TE case) D3 – D2, D6 – D5, D9 – D8 (1A, 60TE case), D1 – D2, D4 – D5, D7 – D8 (5A, 60TE case) and check the Effct wind angle, Pc, Pc Natural, Pc1, forced, Pc2, forced, DLR Ampacity and DLR Current Ratio in the Measurements 4 menu are as shown in Table 20 above for Test 1 or Test 2 or Test 3.

Increase the current into the IA/IB/IC inputs, until the DLR I> 1 start element picks-up.

Check that the appropriate bit (Bits 1 of [0F04: Test Port Status] is set to 1).

Record the current magnitude, Max Iac, the DLR Ampacity and DLR Current Ratio and check that the Max Iac/DLR Ampacity = DLR Current Ratio and check the DLR Current Ratio corresponds to the DLR I>1 Set value, ±5%. See Measurements 4 menu for DLR measurements.

Decrease the current into the IA/IB/IC inputs until the DLR I> 1 start element resets.

Check that the appropriate bit (Bit 1 of [0F04: Test Port Status] is set to 0).

Record the current magnitude, Max Iac, the DLR Ampacity and DLR Current Ratio and check that the Max Iac/DLR Ampacity = DLR Current Ratio and check the DLR Current Ratio corresponds to the DLR I>1 Set value x Drop-off Ratio, ±5%.

Switch OFF the test and reset the alarms.

The same test can also be applied to other DLR protection stages if required, DLR I>1/2/3/4/5/6 Start - DDB 1206-1211.

The pick-up and drop-off current of the DLR stages can be calculated using the equations below:

Pickup criteria: DLR Ratio = Max Iac /DLR Ampacity ≥ DLR I>1/2/3/4/5/6 DLR Set (%)

Drop-off criteria: DLR Ratio < DLR I>1/2/3/4/5/6 DLR Set (%) x Drop-off Ratio

Where,

Max Iac = is the maximum, IA, IB, IC, phase current.

DLR Ampacity is the calculated dynamic line rating, DLR Ampacity Test 1 = 0.2568 In (CIGRE), 0.2527 In (IEEE), Test 2 = 0.7446 In (CIGRE), 0.7310 In (IEEE), Test 3 = 1.598 In (CIGRE), 1.388 In (IEEE), see Table 20 above.

6.3.4.4 Perform the Timing Tests

Ensure that the timer is reset.

Apply a current equivalent to 2x the setting, DLR I>1 Set, (apply current = 2x DLR I> Set x DLR Ampacity) to the relay and note the time displayed when the timer stops. DLR Ampacity Test 1 = 0.2568 In (CIGRE), 0.2527 In (IEEE), Test 2 = 0.7446 In (CIGRE), 0.7310 In (IEEE), Test 3 = 1.598 In (CIGRE), 1.388 In (IEEE), see Table 20 above.

Check the red trip led and yellow alarm led turns on when the relay operates. Check 'Alarms/Faults Present – Dyn Line Rating Start I>1, Dyn Line Rating Trip I>1' is on the display. Reset all alarms. Note, in the default PSL relay 3 is set to operate the Any Trip signal (DDB 626) which initiates the trip LED.

Check that the operating time recorded by the timer is within the range, DLR I>1 Delay setting ±2% or 2 s whichever is greater for definite time operation.

Allowance must also be made for the accuracy of the test equipment being used.

Ensure that the timer is reset.

The same test can also be applied to other DLR protection stages if required.

Ensure that the timer is reset.

On completion of the tests any protection elements that were disabled for testing purposes must have their original settings restored in the **CONFIGURATION** column.

7 ON-LOAD CHECKS

The following on-load measuring checks ensure the external wiring to the current and voltage inputs is correct but can only be carried out if there are no restrictions preventing the energization of the plant being protected.

Remove all test leads, temporary shorting leads, etc. and replace any external wiring that has been removed to allow testing.

If any of the external wiring had to be disconnect from the relay to perform any of the foregoing tests, make sure that all connections are restored according to the relevant external connection or scheme diagram.

7.1 Voltage Connections

Using a multimeter measure the voltage transformer secondary voltages to ensure they are correctly rated. Check that the system phase rotation is correct using a phase rotation meter.

Compare the values of the secondary phase voltages with the relay's measured values, which can be found in the **MEASUREMENTS 1** menu column.

If cell [0D02: **MEASURE'T SETUP**, **Local Values**] is set to **Secondary**, the values displayed on the relay LCD or a portable PC connected to the front EIA(RS)232 communication port should be equal to the applied secondary voltage. The values should be within 1% of the applied secondary voltages. However, an additional allowance must be made for the accuracy of the test equipment being used.

If cell [0D02: **MEASURE'T SETUP**, **Local Values**] is set to **Primary**, the values displayed should be equal to the applied secondary voltage multiplied the corresponding voltage transformer ratio set in the **CT & VT RATIOS** menu column (see Table 21). Again the values should be within 1% of the expected value, plus an additional allowance for the accuracy of the test equipment being used.

Voltage	Cell in MEASUREMENTS 1 Column (02)	Corresponding VT Ratio (in 'VT and CT RATIO column (0A) of menu)
VAB	[0214: VAB Magnitude]	[0A01: Main VT Primary] [0A02: Main VT Sec'y]
VBC	[0216: VBC Magnitude]	
VCA	[0218: VCA Magnitude]	
VAN	[021A: VAN Magnitude]	
VBN	[021C: VBN Magnitude]	
VCN	[021E: VCN Magnitude]	
VN	[0220: VN Measured Mag]	[0A05: VN VT Primary] [0A06: VN VT Sec'y]
C/S Voltage	[0270: C/S Voltage Mag]	[0A16: C/S VT Prim'y] (P341 60TE case) [0A17: C/S VT Sec'y]

Table 21 - Measured voltages and VT ratio settings

7.2 Current Connections

Measure the current transformer secondary values for each input using a multimeter connected in series with corresponding relay current input.

Check that the current transformer polarities are correct by measuring the phase angle between the current and voltage, either against a phase meter already installed on site and known to be correct or by determining the direction of power flow by contacting the system control centre.

Ensure the current flowing in the neutral circuit of the current transformers is negligible.

Compare the values of the secondary phase currents and phase angle with the relay's measured values, which can be found in the **MEASUREMENTS 1** menu column.

Note	*Under normal load conditions the earth fault function will measure little, if any, current. It is therefore necessary to simulate a phase to neutral fault. This can be achieved by temporarily disconnecting one or two of the line current transformer connections to the relay and shorting the terminals of these current transformer secondary windings.*

Check that the I2 Magnitude negative phase sequence current measured by the relay is not greater than expected for the particular installation, see the **MEASUREMENTS 1** menu. Check that the active and reactive power measured by the relay are correct, see the **MEASUREMENTS 2** menu. The power measurement modes are described in the Measurements and Recording chapter.

If cell [0D02: **MEASURE'T SETUP**, **Local Values**] is set to **Secondary**, the currents displayed on the relay LCD or a portable PC connected to the front EIA(RS)232 communication port should be equal to the applied secondary current. The values should be within 1% of the applied secondary currents. However, an additional allowance must be made for the accuracy of the test equipment being used.

If cell [0D02: **MEASURE'T SETUP**, **Local Values**] is set to **Primary**, the currents displayed should be equal to the applied secondary current multiplied by the corresponding current transformer ratio set in **CT & VT RATIOS** menu column. Again the values should be within 1% of the expected value, plus an additional allowance for the accuracy of the test equipment being used.

Note	*If a P341 relay is applied with a single dedicated current transformer for the earth fault function, it may not be possible to check the relay's measured values as the neutral current will be almost zero.*

8 FINAL CHECKS

The tests are now complete.

Remove all test or temporary shorting leads, etc. If it has been necessary to disconnect any of the external wiring from the relay in order to perform the wiring verification tests, it should be ensured that all connections are replaced in accordance with the relevant external connection or scheme diagram.

Ensure that the relay has been restored to service by checking that cell [0F0D: **COMMISSION TESTS**, **Test Mode**] is set to **Disabled**.

If the relay is in a new installation or the circuit breaker has just been maintained, the circuit breaker maintenance and current counters should be zero. These counters can be reset using cell [0606: CB **CONDITION**, **Reset CB Data**]. If the required access level is not active, the relay will prompt for a password to be entered so that the setting change can be made.

If the menu language has been changed to allow accurate testing it should be restored to the customer's preferred language.

If a MMLG or P991 test block is installed, remove the MMLB01 or P992 test plug and replace the MMLG or P991cover so that the protection is put into service.

Ensure that all event records, fault records, disturbance records, alarms and LEDs have been reset before leaving the relay.

If applicable, replace the secondary front cover on the relay.

9 COMMISSIONING TEST RECORD

9.1 Date

Date: _____ Engineer: _____

Station: Circuit: _____

System Frequency: _____ Hz

9.2 Front Plate Information

Interconnection protection relay	P34
Model number	
Serial number	
Rated current In	1A ☐ 5A ☐
Rated voltage Vn	
Auxiliary voltage Vx	

9.3 Test Equipment Used

This section should be completed to allow future identification of protective devices that have been commissioned using equipment that is later found to be defective or incompatible but may not be detected during the commissioning procedure.

Overcurrent test set	Model: Serial No:	
Phase angle meter	Model: Serial No:	
Phase rotation meter	Model: Serial No:	
Insulation tester	Model: Serial No:	
Setting software:	Type: Version:	

9.4 Records

	Have all relevant safety instructions been followed?	Yes ☐ No ☐
5.	PRODUCT CHECKS	
5.1	With the relay de-energized	
5.1.1	Visual inspection	
	Relay damaged?	Yes ☐ No ☐
	Rating information correct for installation?	Yes ☐ No ☐
	Case earth installed?	Yes ☐ No ☐
5.1.2	Current transformer shorting contacts close?	Yes ☐ No ☐ Not checked ☐
5.1.3	Insulation resistance >100 MΩ at 500 V dc	Yes ☐ No ☐ Not tested ☐
5.1.4	External wiring	
	Wiring checked against diagram?	Yes ☐ No ☐
	Test block connections checked?	Yes ☐ No ☐ N/A ☐
5.1.5	Watchdog contacts (auxiliary supply off)	
	Terminals 11 and 12 Contact closed?	Yes ☐ No ☐
	Contact resistance	Ω Not measured ☐
	Terminals 13 and 14 Contact open?	Yes ☐ No ☐
5.1.6	Measured auxiliary supply	V ac/dc
5.2	With the relay energized	
5.2.1	Watchdog contacts (auxiliary supply on)	
	Terminals 11 and 12 Contact open?	Yes ☐ No ☐
	Terminals 13 and 14 Contact closed?	Yes ☐ No ☐
	Contact resistance	Ω Not measured ☐
5.2.3	Date and time	
	Clock set to local time?	Yes ☐ No ☐
	Time maintained when auxiliary supply removed?	Yes ☐ No ☐
5.2.4	Light emitting diodes	
	Relay healthy (green) LED working?	Yes ☐ No ☐
	Alarm (yellow) LED working?	Yes ☐ No ☐
	Out of service (yellow) LED working?	Yes ☐ No ☐
	Trip (red) LED working?	Yes ☐ No ☐
	All 8 programmable LEDs working?	Yes ☐ No ☐
5.2.5	Field supply voltage	
	Value measured between terminals 7 and 9	V dc
	Value measured between terminals 8 and 10	V dc

5.2.6 Input opto-isolators

Opto input 1	working?	Yes	☐	No	☐		
Opto input 2	working?	Yes	☐	No	☐		
Opto input 3	working?	Yes	☐	No	☐		
Opto input 4	working?	Yes	☐	No	☐		
Opto input 5	working?	Yes	☐	No	☐		
Opto input 6	working?	Yes	☐	No	☐		
Opto input 7	working?	Yes	☐	No	☐		
Opto input 8	working?	Yes	☐	No	☐		
Opto input 9	working?	Yes	☐	No	☐	N/A	☐
Opto input 10	working?	Yes	☐	No	☐	N/A	☐
Opto input 11	working?	Yes	☐	No	☐	N/A	☐
Opto input 12	working?	Yes	☐	No	☐	N/A	☐
Opto input 13	working?	Yes	☐	No	☐	N/A	☐
Opto input 14	working?	Yes	☐	No	☐	N/A	☐
Opto input 15	working?	Yes	☐	No	☐	N/A	☐
Opto input 16	working?	Yes	☐	No	☐	N/A	☐
Opto input 17	working?	Yes	☐	No	☐	N/A	☐
Opto input 18	working?	Yes	☐	No	☐	N/A	☐
Opto input 19	working?	Yes	☐	No	☐	N/A	☐
Opto input 20	working?	Yes	☐	No	☐	N/A	☐
Opto input 21	working?	Yes	☐	No	☐	N/A	☐
Opto input 22	working?	Yes	☐	No	☐	N/A	☐
Opto input 23	working?	Yes	☐	No	☐	N/A	☐
Opto input 24	working?	Yes	☐	No	☐	N/A	☐

5.2.7 Output relays

Relay 1	working?		Yes	☐	No	☐
	Contact resistance			Ω	Not measured	☐
Relay 2	working?		Yes	☐	No	☐
	Contact resistance			Ω	Not measured	☐
Relay 3	working?		Yes	☐	No	☐
	Contact resistance			Ω	Not measured	☐
Relay 4	working?		Yes	☐	No	☐
	Contact resistance	(N/C)		Ω	Not measured	☐
		(N/O)		Ω	Not measured	☐
Relay 5	working?		Yes	☐	No	☐
	Contact resistance	(N/C)		Ω	Not measured	☐
		(N/O)		Ω	Not measured	☐
Relay 6	working?		Yes	☐	No	☐
	Contact resistance	(N/C)		Ω	Not measured	☐
		(N/O)		Ω	Not measured	☐
Relay 7	working?		Yes	☐	No	☐
	Contact resistance	(N/C)		Ω	Not measured	☐
		(N/O)		Ω	Not measured	☐
Relay 8	working?		Yes	☐	No	☐
	Contact resistance	(N/C)		Ω	Not measured	☐
		(N/O)		Ω	Not measured	☐

Relay 9	working?		Yes ☐ No ☐ N/A ☐
	Contact resistance		Ω Not measured ☐
Relay 10	working?		Yes ☐ No ☐ N/A ☐
	Contact resistance		Ω Not measured ☐
Relay 11	working?		Yes ☐ No ☐ N/A ☐
	Contact resistance	(N/C)	Ω Not measured ☐
		(N/O)	Ω Not measured ☐
Relay 12	working?		Yes ☐ No ☐ N/A ☐
	Contact resistance	(N/C)	Ω Not measured ☐
		(N/O)	Ω Not measured ☐
Relay 13	working?		Yes ☐ No ☐ N/A ☐
	Contact resistance	(N/C)	Ω Not measured ☐
		(N/O)	Ω Not measured ☐
Relay 14	working?		Yes ☐ No ☐ N/A ☐
	Contact resistance	(N/C)	Ω Not measured ☐
		(N/O)	Ω Not measured ☐
Relay 15	working?		Yes ☐ No ☐ N/A ☐
	Contact resistance	(N/C)	Ω Not measured ☐
		(N/O)	Ω Not measured ☐
Relay 16	working?		Yes ☐ No ☐ N/A ☐
	Contact resistance	(N/C)	Ω Not measured ☐
		(N/O)	Ω Not measured ☐
Relay 17	working?		Yes ☐ No ☐ N/A ☐
	Contact resistance	(N/C)	Ω Not measured ☐
		(N/O)	Ω Not measured ☐
Relay 18	working?		Yes ☐ No ☐ N/A ☐
	Contact resistance	(N/C)	Ω Not measured ☐
		(N/O)	Ω Not measured ☐
Relay 20	working?		Yes ☐ No ☐ N/A ☐
	Contact resistance	(N/C)	Ω Not measured ☐
		(N/O)	Ω Not measured ☐
Relay 21	working?		Yes ☐ No ☐ N/A ☐
	Contact resistance	(N/C)	Ω Not measured ☐
		(N/O)	Ω Not measured ☐
Relay 22	working?		Yes ☐ No ☐ N/A ☐
	Contact resistance	(N/C)	Ω Not measured ☐
		(N/O)	Ω Not measured ☐
Relay 23	working?		Yes ☐ No ☐ N/A ☐
	Contact resistance	(N/C)	Ω Not measured ☐
		(N/O)	Ω Not measured ☐
Relay 24	working?		Yes ☐ No ☐ N/A ☐
	Contact resistance	(N/C)	Ω Not measured ☐
		(N/O)	Ω Not measured ☐

5.2.8 Current loop inputs

CLI input type	0 - 1 mA ☐ 0 - 10 mA ☐ 0 - 20 mA ☐ 4 - 20 mA ☐
CLI1 reading at 50% CLI maximum range [0425: CLI1 Input Label]	
CLI2 reading at 50% CLI maximum range [0426: CLI2 Input Label]	
CLI3 reading at 50% CLI maximum range [0427: CLI3 Input Label]	

	CLI4 reading at 50% CLI maximum range [0428: CLI4 Input Label]	
5.2.9	Current loop outputs	0 - 1 mA ☐ 0 - 10 mA ☐ 0 - 20 mA ☐ 4 - 20 mA ☐
	CLO output type	mA
	CLO1 output current at 50% of rated output	mA
	CLO2 output current at 50% of rated output	mA
	CLO3 output current at 50% of rated output	mA
	CLO4 output current at 50% of rated output	mA

5.2.10	First rear communications port	
	Communication standard	K-Bus ☐ MODBUS ☐ IEC 60870-5-103 ☐ DNP3* ☐ IEC 61850 ☐
	Communications established?	Yes ☐ No ☐
	Protocol converter tested?	Yes ☐ No ☐ N/A ☐

5.2.11	Second rear communications port	
	Communication port configuration	K-Bus ☐ EIA(RS)485 ☐ EIA(RS)232 ☐
	Communications established?	Yes ☐ No ☐
	Protocol converter tested?	Yes ☐ No ☐ N/A ☐

5.2.12	Current inputs	
	Displayed current	Primary ☐ Secondary ☐
	Phase CT ratio $\left(\frac{[\text{Phase CT Primary}]}{[\text{Phase CT Sec'y}]}\right)$	A N/A ☐
	ISen CT ratio $\left(\frac{[\text{ISen CT Primary}]}{[\text{ISen CT Sec'y}]}\right)$	A N/A ☐

Input CT	Applied Value	Displayed Value
IA	A	A
IB	A	A
IC	A	A
IN Sensitive/ISEF	A	A

5.2.13	Voltage inputs	
	Displayed voltage	Primary ☐ Secondary ☐
	Main VT ratio $\left(\frac{[\text{Main VT Primary}]}{[\text{Main VT Sec'y.}]}\right)$	V N/A ☐
	C/S VT ratio $\left(\frac{[C/S\ VT\ \text{Prim'y}]}{[C/S\ VT\ \text{Sec'y}]}\right)$	N/A ☐

VN1VT Ratio	$\left(\frac{\text{[VN1 VT Primary]}}{\text{[VN1 VT Secondary]}}\right)$	V N/A ☐

Input VT	Applied Value	Displayed value
Va	V	V
Vb	V	V
Vc	V	V
C/S Voltage	V	V

6.	SETTING CHECKS	
6.1	Application-specific function settings applied?	Yes ☐ No ☐
	Application-specific programmable scheme logic settings applied?	Yes ☐ No ☐ N/A ☐
6.2	Application-specific function settings verified?	Yes ☐ No ☐ N/A ☐
	Application-specific programmable scheme logic tested?	Yes ☐ No ☐ N/A ☐
6.3.1.6	Rate of change of frequency function pick-up tested?	Yes ☐ No ☐
	df/dt>1 Setting	Hz/s
	Measured df/dt>1 pick-up value	Hz/s
6.3.1.7	Rate of change of frequency function timing tested?	Yes ☐ No ☐
	df/dt>1 Setting	Hz/s
	Applied df/dt value	Hz/s
	Expected df/dt>1 operating time	s
	Measured df/dt>1 operating time	s
6.3.1.8	Rate of change of frequency frequency band tested?	Yes ☐ No ☐
	df/dt>1 Setting	Hz/s
	Applied df/dt value	Hz/s
	df/dt>1 f Low	Hz
	Measured df/dt>1 f Low	Hz
	df/dt>1 f High	Hz
	Measured df/dt>1 f High	Hz
6.3.2	Voltage vector shift protection timing function tested?	Yes ☐ No ☐
	V Shift Angle setting	
	Applied angle value	
	Expected operating time	
	Measured operating time	
6.3	Overcurrent Protection function timing tested?	Yes ☐ No ☐
	Overcurrent type (set in cell [I>1 Direction])	Directional ☐ Non-directional ☐
	Applied voltage	V N/A ☐
	Applied current	A
	Expected operating time	s
	Measured operating time	s

6.3.2	DLR protection (P341 7x software)						
6.3.2.2	Protection pick-up tested?	Yes	☐	No	☐		
	Applied current		A				
	DLR Ampacity		A				
	DLR Ratio		%				
	DLR I>1 Trip pick-up		%				
	Protection drop-off tested?	Yes	☐	No	☐		
	Applied current		A				
	DLR Ampacity		A				
	DLR Ratio		%				
	DLR I>1 Trip drop-off		%				

7.	ON-LOAD CHECKS						
	Test wiring removed?	Yes	☐	No	☐	N/A	☐
	Disturbed customer wiring re-checked?	Yes	☐	No	☐	N/A	☐
	On-load test performed?	Yes	☐	No	☐		

7.1	VT wiring checked?	Yes	☐	No	☐	N/A	☐
	Phase rotation correct?	Yes	☐	No	☐		
	Displayed voltage	Primary	☐	Secondary	☐		
	Main VT ratio $\left(\frac{\text{[Main VT Primary]}}{\text{[Main VT Sec'y.]}}\right)$		V	N/A	☐		
	VN1 VT Ratio $\left(\frac{\text{[VN1 VT Primary]}}{\text{[VN1 VT Secondary]}}\right)$		V	N/A	☐		
	C/S VT ratio $\left(\frac{[C/S\ VT\ \ Prim'y]}{[C/S\ VT\ \ Sec'y]}\right)$		V	N/A	☐		

Voltages	Applied Value	Displayed value
VAN/VAB	V	V
VBN/VBC	V	V
VCN/VCA	V	V
C/S	V	V
VN	V	V

7.2	CT wiring checked?	Yes	☐	No	☐	N/A	☐
	CT polarities correct?	Yes	☐	No	☐		
	Displayed current	Primary	☐	Secondary	☐		
	Phase CT ratio $\left(\frac{\text{[Phase CT Primary]}}{\text{[Phase CT Sec'y]}}\right)$		A	N/A	☐		

ISen CT ratio $\left(\frac{\text{[ISen CT Primary]}}{\text{[ISen CT Sec'y]}} \right)$

A N/A ☐

Currents	Applied Value		Displayed value	
IA	A		A	
IB	A		A	
IC	A		A	
IN	A	N/A ☐	A	N/A ☐
IN Sensitive/ISEF	A		A	

8. FINAL CHECKS

Test wiring removed?	Yes	☐	No	☐	N/A	☐
Disturbed customer wiring re-checked?	Yes	☐	No	☐	N/A	☐
Test mode disabled?	Yes	☐	No	☐		
Circuit breaker operations counter reset?	Yes	☐	No	☐	N/A	☐
Current counters reset?	Yes	☐	No	☐	N/A	☐
Event records reset?	Yes	☐	No	☐		
Fault records reset?	Yes	☐	No	☐		
Disturbance records reset?	Yes	☐	No	☐		
Alarms reset?	Yes	☐	No	☐		
LEDs reset?	Yes	☐	No	☐		
Secondary front cover replaced?	Yes	☐	No	☐	N/A	☐

Commissioning Engineer

Date:

Customer Witness

Date:

10 SETTING RECORD

10.1 Date

Date:		Engineer:	
Station:		Circuit:	
		System Frequency:	Hz
VT Ratio:	/ V	CT Ratio (tap in use):	/ A

10.2 Front Plate Information

Interconnection protection relay	P34
Model number	
Serial number	
Rated current In	1A ☐ 5A ☐
Rated voltage Vn	
Auxiliary voltage Vx	

10.3 Setting Groups Used

Group 1	Yes ☐ No ☐
Group 2	Yes ☐ No ☐
Group 3	Yes ☐ No ☐
Group 4	Yes ☐ No ☐

10.4 0000 – System Data

0000	SYSTEM DATA	
0001	Language	English ☐ Francais ☐ Deutsche ☐ Espanol ☐ Russian ☐ Chinese ☐
0003	Sys Fn Links	
0004	Description	
0005	Plant Reference	
0006	Model Number	
0008	Serial Number	
0009	Frequency	
000A	Comms Level	
000B	Relay Address	
0011	Software Ref 1	
00D1	Password Control	Level 0 ☐ Level 1 ☐ Level 2 ☐
00D2	Password Level 1	
00D3	Password Level 2	

10.5 0600 – CB Condition

0600	CB CONDITION	
0601	CB Operations	
0602	Total IA Broken	
0603	Total IB Broken	
0604	Total IC Broken	
0605	CB Operate Time	

10.6 0700 – CB Control

0700	CB CONTROL	
0701	CB Control by	Disabled ☐ Local ☐ Remote ☐ Local + Remote ☐ Opto ☐ Opto + Local ☐ Opto + Remote ☐ Opto + Rem. + Local ☐
0702	Close Pulse Time	
0703	Trip Pulse Time	
0705	Man Close Delay	
0706	CB Healthy Time	
0707	Sys Check Time	
0709	Reset Lockout by	User Interface ☐ CB Close ☐
070A	Man Close RstDly	
0711	CB Status Input	None ☐ 52A ☐ 52B ☐ Both 52A and 52B ☐

10.7 0800 – Date and Time

0800	DATE AND TIME	
0804	IRIG-B Sync	Disabled ☐ Enabled ☐
0805	IRIG-B Status	Inactive ☐ Active ☐
0806	Battery Status	Dead ☐ Healthy ☐
0807	Battery Alarm	Disabled ☐ Enabled ☐
0813	SNTP Status	Disabled ☐ Trying Server1 ☐ Trying Server 2 ☐ Server 1 OK ☐ Server 2 OK ☐ No response ☐ No Valid Clock ☐
0820	LocalTime Enable	Disabled ☐ Fixed ☐ Flexible ☐
0821	LocalTime Offset	
0822	DST Enable	Disabled ☐ Enabled ☐
0823	DST Offset	
0824	DST Start	
0825	DST Start Day	
0826	DST Start Month	
0827	DST Start Mins	
0828	DST End	

0800	DATE AND TIME	
0829	DST End Day	
082A	DST End Month	
082B	DST End Mins	
0830	RP1 Time Zone	UTC ☐ Local ☐
0831	RP2 Time Zone	UTC ☐ Local ☐
0832	DNPOE Time Zone	UTC ☐ Local ☐
0833	Tunnel Time Zone	UTC ☐ Local ☐

10.8 0900 - Configuration

0900	CONFIGURATION				
0902	Setting Group	Select via Menu ☐	Select via Optos ☐		
0903	Active Settings	Group 1 ☐	Group 2 ☐	Group 3 ☐	Group 4 ☐
0907	Setting Group 1	Disabled ☐	Enabled ☐		
0908	Setting Group 2	Disabled ☐	Enabled ☐		
0909	Setting Group 3	Disabled ☐	Enabled ☐		
090A	Setting Group 4	Disabled ☐	Enabled ☐		
090C	Power	Disabled ☐	Enabled ☐		
0910	Overcurrent	Disabled ☐	Enabled ☐		
911	Thermal Overload	Disabled ☐	Enabled ☐		
0913	Earth Fault	Disabled ☐	Enabled ☐		
0915	SEF/REF/S Power	Disabled ☐	SEF ☐	REF ☐	Sensitive Power ☐
0916	Residual O/V NVD	Disabled ☐	Enabled ☐		
0919	df/dt	Disabled ☐	Enabled ☐		
091A	V Vector Shift	Disabled ☐	Enabled ☐		
091C	Reconnect Delay	Disabled ☐	Enabled ☐		
091D	Volt Protection	Disabled ☐	Enabled ☐		
091E	Freq Protection	Disabled ☐	Enabled ☐		
0920	CB Fail	Disabled ☐	Enabled ☐		
0921	Supervision	Disabled ☐	Enabled ☐		
0923	Dynamic Rating	Disabled ☐	Enabled ☐		
0924	Pole Slipping	Disabled ☐	Enabled ☐		
0925	Input Labels	Invisible ☐	Visible ☐		
0926	Output Labels	Invisible ☐	Visible ☐		
0928	CT & VT Ratios	Invisible ☐	Visible ☐		
0929	Record Control	Invisible ☐	Visible ☐		
092A	Disturb Recorder	Invisible ☐	Visible ☐		
092B	Measure't Setup	Invisible ☐	Visible ☐		
092C	Comms Settings	Invisible ☐	Visible ☐		
092D	Commissioning Tests	Invisible ☐	Visible ☐		
092E	Setting Values	Primary ☐	Secondary ☐		
092F	Control Inputs	Invisible ☐	Visible ☐		
0930	CLIO Inputs	Disabled ☐	Enabled ☐		
0931	CLIO Outputs	Disabled ☐	Enabled ☐		

0900	CONFIGURATION				
0933	System Checks	Disabled	☐	Enabled	☐
0935	Ctrl I/P Config	Invisible	☐	Visible	☐
0936	Ctrl I/P Labels	Invisible	☐	Visible	☐
0939	Direct Access	Disabled	☐	Enabled	☐
09FB	RP1 Read only	Disabled	☐	Enabled	☐
09FC	RP2 Read only	Disabled	☐	Enabled	☐
09FD	NIC Read only	Disabled	☐	Enabled	☐
09FF	LCD Contrast				

10.9 0A00 – CT and VT Ratios

0A00	CT AND VT RATIOS	
0A12	Main VT Primary	
0A13	Main VT Sec'y	
0A16	C/S VT Prim'y	
0A17	C/S VT Sec'y	
0A22	VN1 VT Primary	
0A23	VN1 VT Sec'y	
0A32	Phase CT Primary	
0A61	Isen CT Polarity	
0A33	Phase CT Sec'y	
0A62	SEF CT Primary	
0A63	SEF CT Sec'y	

10.10 0B00 – Record Control

0B00	RECORD CONTROL				
0B04	Alarm Event	Disabled	☐	Enabled	☐
0B05	Relay O/P Event	Disabled	☐	Enabled	☐
0B06	Opto Input Event	Disabled	☐	Enabled	☐
0B07	General Event	Disabled	☐	Enabled	☐
0B08	Fault Rec Event	Disabled	☐	Enabled	☐
0B09	Maint Rec Event	Disabled	☐	Enabled	☐
0B0A	Protection Event	Disabled	☐	Enabled	☐
0B40	DDB 31 - 0				
0B41	DDB 63 - 32				
0B42	DDB 95 - 64				
0B43	DDB 127 - 96				
0B44	DDB 159 - 128				
0B45	DDB 191 - 160				
0B46	DDB 223 - 192				
0B47	DDB 255 - 224				
0B48	DDB 287 - 256				

0B00	RECORD CONTROL	
0B49	DDB 319 - 288	
0B4A	DDB 351 - 320	
0B4B	DDB 383 - 352	
0B4C	DDB 415 - 384	
0B4D	DDB 447 - 416	
0B4E	DDB 479 - 448	
0B4F	DDB 511 - 480	
0B50	DDB 543 - 512	
0B51	DDB 575 - 544	
0B52	DDB 607 - 576	
0B53	DDB 639 - 608	
0B54	DDB 671 - 640	
0B55	DDB 703 - 672	
0B56	DDB 735 - 704	
0B57	DDB 767 - 736	
0B58	DDB 799 - 768	
0B59	DDB 831 - 800	
0B5A	DDB 863 - 832	
0B5B	DDB 895 - 864	
0B5C	DDB 927 - 896	
0B5D	DDB 959 - 928	
0B5E	DDB 991 - 960	
0B5F	DDB 1023 - 992	
0B60	DDB 1055-1024	
0B61	DDB 1087-1056	
0B62	DDB 1119-1088	
0B63	DDB 1151-1120	
0B64	DDB 1183-1152	
0B65	DDB 1215-1184	
0B66	DDB 1247-1216	
0B67	DDB 1279-1248	
0B68	DDB 1311-1280	
0B69	DDB 1343-1312	
0B6A	DDB 1375-1344	
0B6B	DDB 1407-1376	
0B6C	DDB 1439-1408	
0B6D	DDB 1471-1440	
0B6E	DDB 1503-1472	
0B6F	DDB 1535-1504	
0B70	DDB 1567-1536	
0B71	DDB 1599-1568	
0B72	DDB 1631-1600	
0B73	DDB 1663-1632	
0B74	DDB 1695-1664	

0B00	RECORD CONTROL	
0B75	DDB 1727-1696	
0B76	DDB 1759-1728	
0B77	DDB 1791-1760	
0B78	DDB 1823-1792	
0B79	DDB 1855-1824	
0B7A	DDB 1887-1856	
0B7B	DDB 1919-1888	
0B7C	DDB 1951-1920	
0B7D	DDB 1983-1952	
0B7E	DDB 2015-1984	
0B7F	DDB 2047-2016	

10.11 0C00 – Disturb. Recorder

0C00	DISTURB. RECORDER						
0C52	Duration						
0C54	Trigger Position						
0C56	Trigger Mode	Single	☐	Extended	☐		
0C58	Analog Channel 1						
0C59	Analog Channel 2						
0C5A	Analog Channel 3						
0C5B	Analog Channel 4						
0C5C	Analog Channel 5						
0C5D	Analog Channel 6						
0C5E	Analog Channel 7						
0C5F	Analog Channel 8						
0C60	Digital Input 1						
0C81	Input 1 Trigger	No Trigger	☐	Trigger L - H	☐	Trigger H - L	☐
0C82	Digital Input 2						
0C83	Input 2 Trigger	No Trigger	☐	Trigger L - H	☐	Trigger H - L	☐
0C84	Digital Input 3						
0C85	Input 3 Trigger	No Trigger	☐	Trigger L - H	☐	Trigger H - L	☐
0C86	Digital Input 4						
0C87	Input 4 Trigger	No Trigger	☐	Trigger L - H	☐	Trigger H - L	☐
0C88	Digital Input 5						
0C89	Input 5 Trigger	No Trigger	☐	Trigger L - H	☐	Trigger H - L	☐
0C8A	Digital Input 6						
0C8B	Input 6 Trigger	No Trigger	☐	Trigger L - H	☐	Trigger H - L	☐
0C8C	Digital Input 7						
0C8D	Input 7 Trigger	No Trigger	☐	Trigger L - H	☐	Trigger H - L	☐
0C8E	Digital Input 8						
0C8F	Input 8 Trigger	No Trigger	☐	Trigger L - H	☐	Trigger H - L	☐
0C90	Digital Input 9						
0C91	Input 9 Trigger	No Trigger	☐	Trigger L - H	☐	Trigger H - L	☐

0C00	DISTURB. RECORDER						
0C92	Digital Input 10						
0C93	Input 10 Trigger	No Trigger	☐	Trigger L - H	☐	Trigger H - L	☐
0C94	Digital Input 11						
0C95	Input 11 Trigger	No Trigger	☐	Trigger L - H	☐	Trigger H - L	☐
0C96	Digital Input 12						
0C97	Input 12 Trigger	No Trigger	☐	Trigger L - H	☐	Trigger H - L	☐
0C98	Digital Input 13						
0C99	Input 13 Trigger	No Trigger	☐	Trigger L - H	☐	Trigger H - L	☐
0C9A	Digital Input 14						
0C9B	Input 14 Trigger	No Trigger	☐	Trigger L - H	☐	Trigger H - L	☐
0C9C	Digital Input 15						
0C9D	Input 15 Trigger	No Trigger	☐	Trigger L - H	☐	Trigger H - L	☐
0C9E	Digital Input 16						
0C9F	Input 16 Trigger	No Trigger	☐	Trigger L - H	☐	Trigger H - L	☐
0CA4	Digital Input 17						
0CA5	Input 17 Trigger	No Trigger	☐	Trigger L - H	☐	Trigger H - L	☐
0CA6	Digital Input 18						
0CA7	Input 18 Trigger	No Trigger	☐	Trigger L - H	☐	Trigger H - L	☐
0CA8	Digital Input 19						
0CA9	Input 19 Trigger	No Trigger	☐	Trigger L - H	☐	Trigger H - L	☐
0CAA	Digital Input 20						
0CAB	Input 20 Trigger	No Trigger	☐	Trigger L - H	☐	Trigger H - L	☐
0CAC	Digital Input 21						
0CAD	Input 21 Trigger	No Trigger	☐	Trigger L - H	☐	Trigger H - L	☐
0CAE	Digital Input 22						
0CAF	Input 22 Trigger	No Trigger	☐	Trigger L - H	☐	Trigger H - L	☐
0CB0	Digital Input 23						
0CB1	Input 23 Trigger	No Trigger	☐	Trigger L - H	☐	Trigger H - L	☐
0CB2	Digital Input 24						
0CB3	Input 24 Trigger	No Trigger	☐	Trigger L - H	☐	Trigger H - L	☐
0CB4	Digital Input 25						
0CB5	Input 25 Trigger	No Trigger	☐	Trigger L - H	☐	Trigger H - L	☐
0CB6	Digital Input 26						
0CB7	Input 26 Trigger	No Trigger	☐	Trigger L - H	☐	Trigger H - L	☐
0CB8	Digital Input 27						
0CB9	Input 27 Trigger	No Trigger	☐	Trigger L - H	☐	Trigger H - L	☐
0CBA	Digital Input 28						
0CBB	Input 28 Trigger	No Trigger	☐	Trigger L - H	☐	Trigger H - L	☐
0CBC	Digital Input 29						
0CBD	Input 29 Trigger	No Trigger	☐	Trigger L - H	☐	Trigger H - L	☐
0CBE	Digital Input 30						
0CBF	Input 30 Trigger	No Trigger	☐	Trigger L - H	☐	Trigger H - L	☐
0CA4	Digital Input 31						
0CA5	Input 31 Trigger	No Trigger	☐	Trigger L - H	☐	Trigger H - L	☐

0C00	DISTURB. RECORDER	
0CA6	Digital Input 32	
0CA7	Input 32 Trigger	No Trigger ☐ Trigger L - H ☐ Trigger H - L ☐

10.12 0D00 – Measure't Setup

0D00	MEASURE'T SETUP	
0D01	Default Display	3Ph + N Current 3Ph Voltage Power Date & Time Description Plant Reference Frequency Access Level
0D02	Local Values	Primary ☐ Secondary ☐
0D03	Remote Values	Primary ☐ Secondary ☐
0D04	Measurement Ref	VA ☐ VB ☐ VC ☐ IA ☐ IB ☐ IC ☐
0D05	Measurement Mode	
0D06	Fix Dem Period	
0D07	Roll Sub Period	
0D08	Num Sub Periods	
0D08	Remote 2 Values	Primary ☐ Secondary ☐

10.13 0E00 - Communications

0E00	COMMUNICATIONS	
0E01	RP1 Protocol	Courier ☐ IEC 870-5-103 ☐ MODBUS ☐ DNP3.0 ☐
0E02	RP1 Address	
0E03	RP1 Inactivity Timer	
0E04	RP1 Baud Rate	1200 ☐ 2400 ☐ 4800 ☐ 9600 ☐ 19200 ☐ 38400 ☐
0E05	RP1 Parity	Odd ☐ Even ☐ None ☐
0E06	RP1 Measure't Period	
0E07	RP1 Physical Link	Copper ☐ Fiber Optic ☐
0E08	RP1 Time Sync	Disabled ☐ Enabled ☐
0E09	Modbus IEC Time	Standard ☐ Reverse ☐
0E0A	RP1 CS103 Blocking	Disabled ☐ Monitor Blocking ☐ Command Blocking ☐
0E0B	RP1 Card Status	K Bus OK ☐ EIA(RS)485 OK ☐ Fiber Optic OK ☐
0E0C	RP1 Port Config	EIA(RS)232 ☐ EIA(RS)485 ☐ K-Bus ☐
0E8D	RP1 Comms Mode	IEC60870 FT1.2 ☐ 10-bit No Parity ☐
0E0E	RP1 Baud Rate	9600 ☐ 19200 ☐ 38400 ☐
0E11	DNP Need Time	
0E12	DNP App Fragment	
0E13	DNP App Timeout	

0E00	COMMUNICATIONS	
0E14	DNP SBO Timeout	
0E15	DNP Link Timeout	
0E1F	NIC Protocol	IEC61850 (Ethernet)
0E22	NIC MAC Address	
0E64	NIC Tunl Timeout	
0E6A	NIC Link Report	Alarm ☐ Event ☐ None (Ethernet) ☐
0E81	RP2 Protocol	Courier Courier ☐
0E84	RP2 Card Status	Unsupported ☐ Card Not Fitted ☐ EIA(RS)232 OK ☐ EIA(RS)485 OK ☐ K-Bus OK ☐
0E88	RP2 Port Config	EIA(RS)232 ☐ EIA(RS)485 ☐ K-Bus OK ☐
0E8A	RP2 Comms Mode	IEC60870 FT1.2 ☐ 10-bit No Parity ☐
0E90	RP2 Address	
0E92	RP2 Inactive Timer	
0E94	RP2 Baud Rate	1200 ☐ 2400 ☐ 4800 ☐ 9600 ☐ 19200 ☐ 38400 ☐

10.14 0F00 – Commission Tests

0F00	COMMISSION TESTS	
0F05	Monitor Bit 1	
0F06	Monitor Bit 2	
0F07	Monitor Bit 3	
0F08	Monitor Bit 4	
0F09	Monitor Bit 5	
0F0A	Monitor Bit 6	
0F0B	Monitor Bit 7	
0F0C	Monitor Bit 8	
0F0D	Test Mode	Test Mode ☐ Contacts Blocked ☐
0F0E	Test Pattern	

10.15 1000 – CB Monitor Setup

1000	CB MONITOR SETUP	
1001	Broken I^	
1002	I^ Maintenance	Alarm Disabled ☐ Alarm Enabled ☐
1003	I^ Maintenance	
1004	I^ Lockout	Alarm Disabled ☐ Alarm Enabled ☐
1005	I^ Lockout	
1006	No CB Ops Maint	Alarm Disabled ☐ Alarm Enabled ☐
1007	No CB Ops Maint	
1008	No CB Ops Lock	Alarm Disabled ☐ Alarm Enabled ☐
1009	No CB Ops Lock	

1000	CB MONITOR SETUP				
100A	CB Time Maint	Alarm Disabled	☐	Alarm Enabled	☐
100B	CB Time Maint				
100C	CB Time Lockout	Alarm Disabled	☐	Alarm Enabled	☐
100D	CB Time Lockout				
100E	Fault Freq Lock	Alarm Disabled	☐	Alarm Enabled	☐
100F	Fault Freq Count				
1010	Fault Freq Time				

10.16 1100 – Opto Config

1100	OPTO CONFIG						
1101	Nominal V	24 - 27 V 110 - 125 V	☐ ☐	30 - 34 V 220 - 250 V	☐ ☐	48 - 54 V Custom	☐
1102	Opto Input 1	24 - 27 V 110 - 125 V	☐ ☐	30 - 34 V 220 - 250 V	☐ ☐	48 - 54 V	☐
1103	Opto Input 2	24 - 27 V 110 - 125 V	☐ ☐	30 - 34 V 220 - 250 V	☐ ☐	48 - 54 V	☐
1104	Opto Input 3	24 - 27 V 110 - 125 V	☐ ☐	30 - 34 V 220 - 250 V	☐ ☐	48 - 54 V	☐
1105	Opto Input 4	24 - 27 V 110 - 125 V	☐ ☐	30 - 34 V 220 - 250 V	☐ ☐	48 - 54 V	☐
1106	Opto Input 5	24 - 27 V 110 - 125 V	☐ ☐	30 - 34 V 220 - 250 V	☐ ☐	48 - 54 V	☐
1107	Opto Input 6	24 - 27 V 110 - 125 V	☐ ☐	30 - 34 V 220 - 250 V	☐ ☐	48 - 54 V	☐
1108	Opto Input 7	24 - 27 V 110 - 125 V	☐ ☐	30 - 34 V 220 - 250 V	☐ ☐	48 - 54 V	☐
1109	Opto Input 8	24 - 27 V 110 - 125 V	☐ ☐	30 - 34 V 220 - 250 V	☐ ☐	48 - 54 V	☐
110A	Opto Input 9	24 - 27 V 110 - 125 V	☐ ☐	30 - 34 V 220 - 250 V	☐ ☐	48 - 54 V	☐
110B	Opto Input 10	24 - 27 V 110 - 125 V	☐ ☐	30 - 34 V 220 - 250 V	☐ ☐	48 - 54 V	☐
110C	Opto Input 11	24 - 27 V 110 - 125 V	☐ ☐	30 - 34 V 220 - 250 V	☐ ☐	48 - 54 V	☐
110D	Opto Input 12	24 - 27 V 110 - 125 V	☐ ☐	30 - 34 V 220 - 250 V	☐ ☐	48 - 54 V	☐
110E	Opto Input 13	24 - 27 V 110 - 125 V	☐ ☐	30 - 34 V 220 - 250 V	☐ ☐	48 - 54 V	☐
110F	Opto Input 14	24 - 27 V 110 - 125 V	☐ ☐	30 - 34 V 220 - 250 V	☐ ☐	48 - 54 V	☐
1110	Opto Input 15	24 - 27 V 110 - 125 V	☐ ☐	30 - 34 V 220 - 250 V	☐ ☐	48 - 54 V	☐
1111	Opto Input 16	24 - 27 V 110 - 125 V	☐ ☐	30 - 34 V 220 - 250 V	☐ ☐	48 - 54 V	☐
1112	Opto Input 17	24 - 27 V 110 - 125 V	☐ ☐	30 - 34 V 220 - 250 V	☐ ☐	48 - 54 V	☐
1113	Opto Input 18	24 - 27 V 110 - 125 V	☐ ☐	30 - 34 V 220 - 250 V	☐ ☐	48 - 54 V	☐

1100	OPTO CONFIG																
1114	Opto Input 19	24 - 27 V 110 - 125 V	☐ ☐			30 - 34 V 220 - 250 V	☐ ☐			48 - 54 V	☐						
1115	Opto Input 20	24 - 27 V 110 - 125 V	☐ ☐			30 - 34 V 220 - 250 V	☐ ☐			48 - 54 V	☐						
1116	Opto Input 21	24 - 27 V 110 - 125 V	☐ ☐			30 - 34 V 220 - 250 V	☐ ☐			48 - 54 V	☐						
1117	Opto Input 22	24 - 27 V 110 - 125 V	☐ ☐			30 - 34 V 220 - 250 V	☐ ☐			48 - 54 V	☐						
1118	Opto Input 23	24 - 27 V 110 - 125 V	☐ ☐			30 - 34 V 220 - 250 V	☐ ☐			48 - 54 V	☐						
1119	Opto Input 24	24 - 27 V 110 - 125 V	☐ ☐			30 - 34 V 220 - 250 V	☐ ☐			48 - 54 V	☐						
1150	Opto Filter Ctrl																
1180	Characteristic	Standard 60% - 80%				☐		50% - 70%			☐						

10.17 1300 – Ctrl I/P Config

1300	CTRL I/P CONFIG																
1301	Hotkey Enabled																
1310	Control Input 1	Latched			☐		Pulsed				☐						
1311	Ctrl Command 1	On/Off In/Out			☐ ☐		Set/Reset Enabled/Disabled				☐ ☐						
1314	Control Input 2	Latched			☐		Pulsed				☐						
1315	Ctrl Command 2	On/Off In/Out			☐ ☐		Set/Reset Enabled/Disabled				☐ ☐						
1318	Control Input 3	Latched			☐		Pulsed				☐						
1319	Ctrl Command 3	On/Off In/Out			☐ ☐		Set/Reset Enabled/Disabled				☐ ☐						
131C	Control Input 4	Latched			☐		Pulsed				☐						
131D	Ctrl Command 4	On/Off In/Out			☐ ☐		Set/Reset Enabled/Disabled				☐ ☐						
1320	Control Input 5	Latched			☐		Pulsed				☐						
1321	Ctrl Command 5	On/Off In/Out			☐ ☐		Set/Reset Enabled/Disabled				☐ ☐						
1324	Control Input 6	Latched			☐		Pulsed				☐						
1325	Ctrl Command 6	On/Off In/Out			☐ ☐		Set/Reset Enabled/Disabled				☐ ☐						
1328	Control Input 7	Latched			☐		Pulsed				☐						
1329	Ctrl Command 7	On/Off In/Out			☐ ☐		Set/Reset Enabled/Disabled				☐ ☐						
132C	Control Input 8	Latched			☐		Pulsed				☐						
132D	Ctrl Command 8	On/Off In/Out			☐ ☐		Set/Reset Enabled/Disabled				☐ ☐						
1330	Control Input 9	Latched			☐		Pulsed				☐						
1331	Ctrl Command 9	On/Off In/Out			☐ ☐		Set/Reset Enabled/Disabled				☐ ☐						

1300	CTRL I/P CONFIG				
1334	Control Input 10	Latched	☐	Pulsed	☐
1335	Ctrl Command 10	On/Off In/Out	☐ ☐	Set/Reset Enabled/Disabled	☐ ☐
1338	Control Input 11	Latched	☐	Pulsed	☐
1339	Ctrl Command 11	On/Off In/Out	☐ ☐	Set/Reset Enabled/Disabled	☐ ☐
133C	Control Input 12	Latched	☐	Pulsed	☐
133C	Ctrl Command 12	On/Off In/Out	☐ ☐	Set/Reset Enabled/Disabled	☐ ☐
1340	Control Input 13	Latched	☐	Pulsed	☐
1341	Ctrl Command 13	On/Off In/Out	☐ ☐	Set/Reset Enabled/Disabled	☐ ☐
1344	Control Input 14	Latched	☐	Pulsed	☐
1345	Ctrl Command 14	On/Off In/Out	☐ ☐	Set/Reset Enabled/Disabled	☐ ☐
1348	Control Input 15	Latched	☐	Pulsed	☐
1349	Ctrl Command 15	On/Off In/Out	☐ ☐	Set/Reset Enabled/Disabled	☐ ☐
134C	Control Input 16	Latched	☐	Pulsed	☐
134D	Ctrl Command 16	On/Off In/Out	☐ ☐	Set/Reset Enabled/Disabled	☐ ☐
1350	Control Input 17	Latched	☐	Pulsed	☐
1351	Ctrl Command 17	On/Off In/Out	☐ ☐	Set/Reset Enabled/Disabled	☐ ☐
1354	Control Input 18	Latched	☐	Pulsed	☐
1355	Ctrl Command 18	On/Off In/Out	☐ ☐	Set/Reset Enabled/Disabled	☐ ☐
1358	Control Input 19	Latched	☐	Pulsed	☐
1359	Ctrl Command 19	On/Off In/Out	☐ ☐	Set/Reset Enabled/Disabled	☐ ☐
135C	Control Input 20	Latched	☐	Pulsed	☐
135D	Ctrl Command 20	On/Off In/Out	☐ ☐	Set/Reset Enabled/Disabled	☐ ☐
1360	Control Input 21	Latched	☐	Pulsed	☐
1361	Ctrl Command 21	On/Off In/Out	☐ ☐	Set/Reset Enabled/Disabled	☐ ☐
1364	Control Input 22	Latched	☐	Pulsed	☐
1365	Ctrl Command 22	On/Off In/Out	☐ ☐	Set/Reset Enabled/Disabled	☐ ☐
1368	Control Input 23	Latched	☐	Pulsed	☐
1369	Ctrl Command 23	On/Off In/Out	☐ ☐	Set/Reset Enabled/Disabled	☐ ☐
136C	Control Input 24	Latched	☐	Pulsed	☐
136D	Ctrl Command 24	On/Off In/Out	☐ ☐	Set/Reset Enabled/Disabled	☐ ☐
1370	Control Input 25	Latched	☐	Pulsed	☐
1371	Ctrl Command 25	On/Off In/Out	☐ ☐	Set/Reset Enabled/Disabled	☐ ☐
1374	Control Input 26	Latched	☐	Pulsed	☐

1300	CTRL I/P CONFIG				
1375	Ctrl Command 26	On/Off In/Out	☐ ☐	Set/Reset Enabled/Disabled	☐ ☐
1378	Control Input 27	Latched	☐	Pulsed	☐
1379	Ctrl Command 27	On/Off In/Out	☐ ☐	Set/Reset Enabled/Disabled	☐ ☐
137C	Control Input 28	Latched	☐	Pulsed	☐
137D	Ctrl Command 28	On/Off In/Out	☐ ☐	Set/Reset Enabled/Disabled	☐ ☐
1380	Control Input 29	Latched	☐	Pulsed	☐
1381	Ctrl Command 29	On/Off In/Out	☐ ☐	Set/Reset Enabled/Disabled	☐ ☐
1384	Control Input 30	Latched	☐	Pulsed	☐
1385	Ctrl Command 30	On/Off In/Out	☐ ☐	Set/Reset Enabled/Disabled	☐ ☐
1388	Control Input 31	Latched	☐	Pulsed	☐
1389	Ctrl Command 31	On/Off In/Out	☐ ☐	Set/Reset Enabled/Disabled	☐ ☐
138C	Control Input 32	Latched	☐	Pulsed	☐
138D	Ctrl Command 32	On/Off In/Out	☐ ☐	Set/Reset Enabled/Disabled	☐ ☐

10.18 1900 – IED Configurator

1900	IED CONFIGURATOR					
1905	Switch Conf.Bank	No Action	☐	Switch Banks	☐	
190A	Restore MCL	No Action	☐	Restore MCL	☐	
1910	Active Conf.Name					
1911	Active Conf.Rev					
1920	Inact.Conf.Name					
1921	Inact.Conf.Rev					
1930	IP PARAMETERS					
1931	IP Address					
1932	Subnet Address					
1933	Gateway					
1940	SNTP PARAMETERS					
1941	SNTP Server 1					
1942	SNTP Server 2					
1950	IEC 61850 SCL					
1951	IED Name					
1960	IEC 61850 GOOSE					
1970	GoEna	Disabled	☐	Enabled	☐	
1971	Test Mode	Disabled	☐	Pass Through	☐	Forced ☐
1973	Ignore Test Flag	Yes ☐	No	☐		

10.19 2900 – Ctrl I/P Labels

2900	CTRL I/P LABELS	
2901	Control Input 1	
2902	Control Input 2	
2903	Control Input 3	
2904	Control Input 4	
2905	Control Input 5	
2906	Control Input 6	
2907	Control Input 7	
2908	Control Input 8	
2909	Control Input 9	
290A	Control Input 10	
290B	Control Input 11	
290C	Control Input 12	
290D	Control Input 13	
290E	Control Input 14	
290F	Control Input 15	
2910	Control Input 16	
2911	Control Input 17	
2912	Control Input 18	
2913	Control Input 19	
2914	Control Input 20	
2915	Control Input 21	
2916	Control Input 22	
2917	Control Input 23	
2918	Control Input 24	
2919	Control Input 25	
291A	Control Input 26	
291B	Control Input 27	
291C	Control Input 28	
291D	Control Input 29	
291E	Control Input 30	
291F	Control Input 31	
2920	Control Input 32	

10.20 B700 – PSL Data

B700	PSL DATA	
B701	Grp 1 PSL Ref	
B702	Date/Time	
B703	Grp 1 PSL ID	
B711	Grp 2 PSL Ref	
B712	Date/Time	
B713	Grp 2 PSL ID	

B700	PSL DATA	
B721	Grp 3 PSL Ref	
B722	Date/Time	
B723	Grp 3 PSL ID	
B731	Grp 4 PSL Ref	
B732	Date/Time	
B733	Grp 4 PSL ID	

10.21 Protection Settings

There are four Groups used for protection settings:

- Group 1 protection settings use 3000/4000 Courier cell addresses
- Group 2 protection settings use 5000/6000 Courier cell addresses
- Group 3 protection settings use 7000/8000 Courier cell addresses
- Group 4 protection settings use 9000/A000 Courier cell addresses

10.22 3000 – System Config

3000	SYSTEM CONFIG				
Group 1 Settings		Group 1 Settings	Group 2 Settings	Group 3 Settings	Group 4 Settings
3042	Phase Sequence				
3043	VT Reversal				
3044	CT1 Reversal				
3045	CT2 Reversal				
3050	C/S Input				
3051	C/S V Ratio Corr				
3052	Main VT Vect Grp				
3053	Main VT Location				

10.23 3100 - Power

3100	POWER				
Group 1 Settings		Group 1 Settings	Group 2 Settings	Group 3 Settings	Group 4 Settings
3120	Operating Mode				
3124	Power1 Function				
3128	-P>1 Setting				
312C	P<1 Setting				
3130	P>1 Setting				
3134	Power 1 Time Delay				
3138	Power1 DO Timer				
313C	P1 Poledead Inhibit				

3100	POWER				
Group 1 Settings		Group 1 Settings	Group 2 Settings	Group 3 Settings	Group 4 Settings
3140	Power 2 Function				
3144	P>2 Setting				
3148	P<2 Setting				
314C	P>2 Setting				
3150	Power 2 Time Delay				
3154	Power 2 DO Timer				
3158	P2 Poledead Inhibit				

10.24 3500 - Overcurrent

3500	OVERCURRENT				
Group 1 Settings		Group 1 Settings	Group 2 Settings	Group 3 Settings	Group 4 Settings
3523	I>1 Function				
3524	I>1 Direction				
3527	I>1 Current Set				
3529	I>1 Time Delay				
352A	I>1 TMS				
352B	I>1 Time Dial				
352C	I>1 K (RI)				
352E	I>1 Reset Char				
352F	I>1 tRESET				
3532	I>2 Function				
3533	I>2 Direction				
3536	I>2 Current				
3538	I>2 Time Delay				
3539	I>2 TMS				
353A	I>2 Time Dial				
353B	I>2 K (RI)				
353D	I>2 Reset Char				
353E	I>2 tRESET				
3540	I>3 Status				
3541	I>3 Direction				
3544	I>3 Current Set				
3545	I>3 Time Delay				
3547	I>4 Status				
3548	I>4 Direction				
354B	I>4 Current Set				
354C	I>4 Time Delay				
354E	I> Char Angle				
354F	I> Function Link				
3550	NPS OVERCURRENT				

3500	OVERCURRENT				
Group 1 Settings		Group 1 Settings	Group 2 Settings	Group 3 Settings	Group 4 Settings
3552	I2>1 Status				
3554	I2>1 Direction				
3556	I2>1 Current Set				
3558	I2>1 Time Delay				
3562	I2>2 Status				
3564	I2>2 Direction				
3566	I2>2 Current Set				
3568	I2>2 Time Delay				
3572	I2>3 Status				
3574	I2>3 Direction				
3576	I2>3 Current Set				
3578	I2>3 Time Delay				
3582	I2>4 Status				
3584	I2>4 Direction				
3586	I2>4 Current Set				
3588	I2>4 Time Delay				
3590	I2> VTS Block				
3594	I2>V2Pol				
3598	I2> Char Angle				

10.25 3600 – Thermal Overload

3600	THERMAL OVERLOAD				
Group 1 Settings		Group 1 Settings	Group 2 Settings	Group 3 Settings	Group 4 Settings
3650	Thermal				
3655	Thermal I >				
365A	Thermal Alarm				
365F	T-heating				
3664	T-cooling				
3669	M Factor				

10.26 3800 – Earth Fault

3800	EARTH FAULT				
Group 1 Settings		Group 1 Settings	Group 2 Settings	Group 3 Settings	Group 4 Settings
3825	IN>1 Function				
3829	IN>1 Current Set				
382A	IN>1 IDG Is				
382C	IN>1 Time Delay				
382D	IN>1 TMS				

3800	EARTH FAULT				
Group 1 Settings		Group 1 Settings	Group 2 Settings	Group 3 Settings	Group 4 Settings
382E	IN>1 Time Dial				
382F	IN>1 K (RI)				
3830	IN>1 IDG Time				
3832	IN>1 Reset Char				
3833	IN>1 tRESET				
3836	IN>2 Function				
3837	IN>2 Direction				
383A	IN>2 Current Set				
383B	IN>2 IDG Is				
383D	IN>2 Time Delay				
383E	IN>2 TMS				
383F	IN>2 Time Dial				
3840	IN>2 K (RI)				
3841	IN>2 IDG Time				
3843	IN>2 Reset Char				
3844	IN>2 tRESET				
3846	IN>3 Status				
3847	IN>3 Direction				
384A	IN>3 Current				
384B	IN>3 Time Delay				
384D	IN>4 Status				
384E	IN>4 Direction				
3851	IN>4 Current				
3852	IN>4 Time Delay				
3854	IN> Func Link				
3855	IN> Directional				
3856	IN> Char Angle				
3857	IN> Pol				
3858	IN> VNpol Input				
3859	IN> VNpol Set				
385A	IN> V2pol Set				

10.27 3A00 – SEF/REF Protection

3A00	SEF/REF PROTECTION				
Group 1 Settings		Group 1 Settings	Group 2 Settings	Group 3 Settings	Group 4 Settings
3A01	Sens E/F Options				
3A2A	ISEF>1 Function				
3A2B	ISEF>1 Direction				
3A2E	ISEF>1 Current				
3A2F	ISEF>1 IDG Is				

3A00	SEF/REF PROTECTION				
Group 1 Settings		Group 1 Settings	Group 2 Settings	Group 3 Settings	Group 4 Settings
3A31	ISEF>1 Delay				
3A32	ISEF>1 TMS				
3A33	ISEF>1 Time Dial				
3A34	ISEF>1 IDG Time				
3A36	ISEF>1 Reset Char				
3A37	ISEF>1 tRESET				
3A3A	ISEF>2 Function				
3A3B	ISEF>2 Direction				
3A3E	ISEF>2 Current				
3A3F	ISEF>2 IDG Is				
3A41	ISEF>2 Delay				
3A42	ISEF>2 TMS				
3A43	ISEF>2 Time Dial				
3A44	ISEF>2 IDG Time				
3A46	ISEF>2 Reset Char				
3A47	ISEF>2 tRESET				
3A49	ISEF>3 Status				
3A4A	ISEF>3 Direction				
3A4D	ISEF>3 Current				
3A4E	ISEF>3 Delay				
3A50	ISEF>4 Status				
3A51	ISEF>4 Direction				
3A54	ISEF>4 Current				
3A55	ISEF>4 Delay				
3A57	ISEF> Func Link				
3A58	ISEF Directional				
3A59	ISEF> Char Angle				
3A5A	ISEF> Vpol Input				
3A5B	ISEF> VNpol Set				
3A5D	Wattmetric SEF				
3A5E	PN> Setting				
3A60	Restricted E/F				
3A61	IREF> k1				
3A62	IREF> k2				
3A63	IREF> Is1				
3A64	IREF> Is2				
3A65	IREF> Is				

10.28 3B00 – Residual O/V NVD

3B00	RESIDUAL O/V NVD				
Group 1 Settings		Group 1 Settings	Group 2 Settings	Group 3 Settings	Group 4 Settings
3B10	VN>1 Status				
3B12	VN>1 Input				
3B14	VN>1 Function				
3B16	VN>1 Voltage Set				
3B18	VN>1 Time Delay				
3B1A	VN>1 TMS				
3B1C	VN>1 tReset				
3B20	VN>2 Status				
3B22	VN>2 Input				
3B24	VN>2 Function				
3B26	VN>2 Voltage Set				
3B28	VN>2 Time Delay				
3B2A	VN>2 TMS				
3B2C	VN>2 tReset				
3B30	VN>3 Status				
3B32	VN>3 Input				
3B34	VN>3 Function				
3B36	VN>3 Voltage Set				
3B38	VN>3 Time Delay				
3B3A	VN>3 TMS				
3B3C	VN>3 tReset				
3B40	VN>4 Status				
3B42	VN>4 Input				
3B44	VN>4 Function				
3B46	VN>4 Voltage Set				
3B48	VN>4 Time Delay				
3B4A	VN>4 TMS				
3B4C	VN>4 tReset				

10.29 3E00 – DF/DT

3E00	DF/DT				
Group 1 Settings		Group 1 Settings	Group 2 Settings	Group 3 Settings	Group 4 Settings
3E10	Operating Mode				
3E11	df/dt Avg Cycles				
3E12	df/dt Iterations				
3E20	df/dt>1 Status				
3E21	df/dt>1 Setting				
3E22	df/dt>1 Dir'n				
3E23	df/dt>1 Time				

3E00	DF/DT				
Group 1 Settings		Group 1 Settings	Group 2 Settings	Group 3 Settings	Group 4 Settings
3E24	df/dt>1 f L/H				
3E25	df/dt>1 f Low				
3E26	df/dt>1 f High				
3E30	df/dt>2 Status				
3E31	df/dt>2 Setting				
3E31	df/dt>2 Dir'n				
3E33	df/dt>2 Time				
3E40	df/dt>3 Status				
3E41	df/dt>3 Setting				
3E42	df/dt>3 Dir'n				
3E43	df/dt>3 Time				
3E50	df/dt>4 Status				
3E51	df/dt>4 Setting				
3E52	df/dt>4 Dir'n				
3E53	df/dt>4 Time				

10.30 3F00 - Group 1 V Vector Shift

3F00	GROUP 1 V VECTOR SHIFT				
Group 1 Settings		Group 1 Settings	Group 2 Settings	Group 3 Settings	Group 4 Settings
3F01	V Shift Status				
3F02	V Shift Angle				

10.31 4100 – Group 1 V Reconnect Delay

4100	GROUP 1 V RECONNECT DELAY				
Group 1 Settings		Group 1 Settings	Group 2 Settings	Group 3 Settings	Group 4 Settings
4101	Reconnect Status				
4102	Reconnect Delay				
4103	Reconnect tPULSE				

10.32 4200 – Volt Protection

4200	VOLT PROTECTION				
Group 1 Settings		Group 1 Settings	Group 2 Settings	Group 3 Settings	Group 4 Settings
4201	UNDERVOLTAGE				
4202	V< Measur't Mode				
4203	V< Operate Mode				
4204	V<1 Function				

4200	VOLT PROTECTION				
Group 1 Settings		Group 1 Settings	Group 2 Settings	Group 3 Settings	Group 4 Settings
4205	V<1 Voltage Set				
4206	V<1 Time Delay				
4207	V<1 TMS				
4208	V<1 Poledead Inhibit				
4209	V<2 Status				
420A	V<2 Voltage Set				
420B	V<2 Time Delay				
420C	V<2 Poledead Inhibit				
420D	OVERVOLTAGE				
420E	V> Measur't Mode				
420F	V> Operate Mode				
4210	V>1 Function				
4211	V>1 Voltage Set				
4212	V>1 Time Delay				
4213	V>1 TMS				
4214	V>2 Status				
4215	V>2 Voltage Set				
4216	V>2 Time Delay				
4220	NPS OVERVOLTAGE				
4222	V2>1 Status				
4226	V2>1 Voltage Set				
4228	V2>1 Time Delay				

10.33 4300 – Freq Protection

4300	FREQ PROTECTION				
Group 1 Settings		Group 1 Settings	Group 2 Settings	Group 3 Settings	Group 4 Settings
4301	Under Frequency				
4302	F<1 Status				
4303	F<1 Setting				
4304	F<1 Time Delay				
4305	F<2 Status				
4306	F<2 Setting				
4307	F<2 Time Delay				
4308	F<3 Status				
4309	F<3 Setting				
430A	F<3 Time Delay				
430B	F<4 Status				
430C	F<4 Setting				
430D	F<4 Time Delay				
430E	F< Function Link				

4300	FREQ PROTECTION				
Group 1 Settings		Group 1 Settings	Group 2 Settings	Group 3 Settings	Group 4 Settings
430F	Over Frequency				
4310	F>1 Status				
4311	F>1 Freq Set				
4312	F>1 Time Delay				
4313	F>2 Status				
4314	F>2 Freq Set				
4315	F>2 Time Delay				

10.34 4500 – CB Fail & I<

4500	CB FAIL & I<				
Group 1 Settings		Group 1 Settings	Group 2 Settings	Group 3 Settings	Group 4 Settings
4501	BREAKER FAIL				
4502	CB Fail 1 Status				
4503	CB Fail 1 Timer				
4504	CB Fail 2 Status				
4505	CB Fail 2 Timer				
4506	CBF Non I Reset				
4507	CBF Ext Reset				
4508	UNDER CURRENT				
4509	I< Current Set				
450A	IN< Current Set				
450B	ISEF< Current				
450C	BLOCKED O/C				
450D	Remove I> Start				
450E	Remove IN> Start				

10.35 4600 - Supervision

4600	SUPERVISION				
Group 1 Settings		Group 1 Settings	Group 2 Settings	Group 3 Settings	Group 4 Settings
4601	VT SUPERVISION				
4602	VTS Status				
4603	VTS Reset Mode				
4604	VTS Time Delay				
4605	VTS I> Inhibit				
4606	VTS I2> Inhibit				
4607	CT SUPERVISION				
4608	CTS Status				
4609	CTS VN Inhibit				

4600	SUPERVISION				
Group 1 Settings		Group 1 Settings	Group 2 Settings	Group 3 Settings	Group 4 Settings
460A	CTS VN< Inhibit				
460B	CTS IN> Set				
460C	CTS Time Delay				

10.36 4700 – Sensitive Power

4700	SENSITIVE POWER				
Group 1 Settings		Group 1 Settings	Group 2 Settings	Group 3 Settings	Group 4 Settings
4720	Comp Angle				
4724	Operating Mode				
4728	Sen Power 1 Func				
472C	Sen P>1 Setting				
4730	Sen P<1 Setting				
4734	Sen P>1 Setting				
4738	Sen Power 1 Delay				
473C	Power 1 DO Timer				
4740	P1 Pole Dead Inhibit				
4744	Sen Power 2 Func				
4748	Sen P>2 Setting				
474C	Sen P<2 Setting				
4750	Sen P>2 Setting				
4754	Sen Power 2 Delay				
4758	Power 2 DO Timer				
475C	P2 Pole Dead Inhibit				

10.37 4800 – Dynamic Rating

4800	DYNAMIC RATING				
Group 1 Settings		Group 1 Settings	Group 2 Settings	Group 3 Settings	Group 4 Settings
4801	Dyn Line Rating				
4802	DLR LINE SETTING				
4803	Conductor Type				
4804	NonFerrous layer				
4805	DC Resist per km				
4806	Overall Diameter				
4807	Outer Layer Diam				
4808	TotalArea(mm sq)				
4809	TempCoefR x0.001				
480A	mc				
480E	Solar Absorpt				

4800	DYNAMIC RATING				
Group 1 Settings		Group 1 Settings	Group 2 Settings	Group 3 Settings	Group 4 Settings
480F	Line Emissivity				
4810	Line Elevation				
4811	Line Azimuth Min				
4812	Line Azimuth Max				
4813	T Conductor Max				
4814	Ampacity Min				
4815	Ampacity Max				
4816	Drop-off Ratio				
4817	Line Direction				
4820	DLR CHANNEL SET				
4821	Ambient Temp				
4822	Default AmbientT				
4823	Ambient T Corr				
4824	Ambient T Min				
4825	Ambient T Max				
4826	Ambient T AvgSet				
4827	Ambient T AvgDly				
4828	Amb T Input Type				
4829	Amb T I/P Min				
482A	Amb T I/P Max				
482B	Amb T I< Alarm				
482C	Amb T I< Alm Set				
4831	Wind Velocity				
4832	Default Wind Vel				
4833	Wind Vel Corr				
4834	Wind Vel Min				
4835	Wind Vel Max				
4836	Wind Vel AvgSet				
4837	Wind Vel AvgDly				
4838	WV Input Type				
4839	WV I/P Minimum				
483A	WV I/P Maximum				
483B	WV I< Alarm				
483C	WV I< Alarm Set				
4841	Wind Direction				
4842	Default Wind Dir				
4843	Wind Dir Corr				
4844	Wind Dir Min				
4845	Wind Dir Max				
4846	Wind Dir AvgSet				
4847	Wind Dir AvgDly				
4848	WD Input Type				
4849	WD I/P Minimum				

4800	DYNAMIC RATING				
Group 1 Settings		Group 1 Settings	Group 2 Settings	Group 3 Settings	Group 4 Settings
484A	WD I/P Maximum				
484B	WD I< Alarm				
484C	WD I< Alarm Set				
4851	Solar Radiation				
4852	Default Solar R				
4853	Solar Rad Corr				
4854	Solar Rad Min				
4855	Solar Rad Max				
4856	Solar Rad AvgSet				
4857	Solar Rad AvgDly				
4858	SR Input Type				
4859	SR I/P Minimum				
485A	SR I/P Maximum				
485B	SR I< Alarm				
485C	SR I< Alarm Set				
4860	DLR PROT SETTING				
4861	DLR I>1 Trip				
4862	DLR I>1 Set				
4863	DLR I>1 Delay				
4864	DLR I>2 Trip				
4865	DLR I>2 Set				
4866	DLR I>2 Delay				
4867	DLR I>3 Trip				
4868	DLR I>3 Set				
4869	DLR I>3 Delay				
486A	DLR I>4 Trip				
486B	DLR I>4 Set				
486C	DLR I>4 Delay				
486D	DLR I>5 Trip				
486E	DLR I>5 Set				
486F	DLR I>5 Delay				
4870	DLR I>6 Trip				
4871	DLR I>6 Set				
4872	DLR I>6 Delay				

10.38 4A00 – Input Labels

4A00	INPUT LABELS				
Group 1 Settings		Group 1 Settings	Group 2 Settings	Group 3 Settings	Group 4 Settings
4A01	Opto Input 1				
4A02	Opto Input 2				

4A00	INPUT LABELS				
Group 1 Settings		Group 1 Settings	Group 2 Settings	Group 3 Settings	Group 4 Settings
4A03	Opto Input 3				
4A04	Opto Input 4				
4A05	Opto Input 5				
4A06	Opto Input 6				
4A07	Opto Input 7				
4A08	Opto Input 8				
4A09	Opto Input 9				
4A0A	Opto Input 10				
4A0B	Opto Input 11				
4A0C	Opto Input 12				
4A0D	Opto Input 13				
4A0E	Opto Input 14				
4A0F	Opto Input 15				
4A10	Opto Input 16				
4A11	Opto Input 17				
4A12	Opto Input 18				
4A13	Opto Input 19				
4A14	Opto Input 20				
4A15	Opto Input 21				
4A16	Opto Input 22				
4A17	Opto Input 23				
4A18	Opto Input 24				

10.39 4B00 – Output Labels

4B00	OUTPUT LABELS				
Group 1 Settings		Group 1 Settings	Group 2 Settings	Group 3 Settings	Group 4 Settings
4B01	Relay 1				
4B02	Relay 2				
4B03	Relay 3				
4B04	Relay 4				
4B05	Relay 5				
4B06	Relay 6				
4B07	Relay 7				
4B08	Relay 8				
4B09	Relay 9				
4B0A	Relay 10				
4B0B	Relay 11				
4B0C	Relay 12				
4B0D	Relay 13				
4B0E	Relay 14				

4B00	OUTPUT LABELS				
Group 1 Settings		Group 1 Settings	Group 2 Settings	Group 3 Settings	Group 4 Settings
4B0F	Relay 15				
4B10	Relay 16				
4B11	Relay 17				
4B12	Relay 18				
4B13	Relay 19				
4B14	Relay 20				
4B15	Relay 21				
4B16	Relay 22				
4B17	Relay 23				
4B18	Relay 24				

10.40 4D00 – CLIO Protection

4D00	CLIO PROTECTION				
Group 1 Settings		Group 1 Settings	Group 2 Settings	Group 3 Settings	Group 4 Settings
4D02	CLIO Input 1				
4D04	CLI1 Input Type				
4D06	CLI1 Input Label				
4D08	CLI1 Minimum				
4D0A	CLI1 Maximum				
4D0C	CLI1 Alarm				
4D0E	CLI1 Alarm Fn				
4D10	CLI1 Alarm Set				
4D12	CLI1 Alarm Delay				
4D14	CLI1 Trip				
4D16	CLI1 Trip Fn				
4D18	CLI1 Trip Set				
4D1A	CLI1 Trip Delay				
4D1C	CLI1 I< Alarm				
4D1E	CLI1 I< Alm Set				
4D22	CLIO Input 2				
4D24	CLI2 Input Type				
4D26	CLI2 Input Label				
4D28	CLI2 Minimum				
4D2A	CLI2 Maximum				
4D2C	CLI2 Alarm				
4D2E	CLI2 Alarm Fn				
4D30	CLI2 Alarm Set				
4D32	CLI2 Alarm Delay				
4D34	CLI2 Trip				
4D36	CLI2 Trip Fn				

4D00	CLIO PROTECTION				
Group 1 Settings		Group 1 Settings	Group 2 Settings	Group 3 Settings	Group 4 Settings
4D38	CLI2 Trip Set				
4D3A	CLI2 Trip Delay				
4D3C	CLI2 I< Alarm				
4D3E	CLI2 I< Alm Set				
4D42	CLIO Input 3				
4D44	CLI3 Input Type				
4D46	CLI3 Input Label				
4D48	CLI3 Minimum				
4D4A	CLI3 Maximum				
4D4C	CLI3 Alarm				
4D4E	CLI3 Alarm Fn				
4D50	CLI3 Alarm Set				
4D52	CLI3 Alarm Delay				
4D54	CLI3 Trip				
4D56	CLI3 Trip Fn				
4D58	CLI3 Trip Set				
4D5A	CLI3 Trip Delay				
4D5C	CLI3 I< Alarm				
4D5E	CLI3 I< Alm Set				
4D62	CLIO Input 4				
4D64	CLI4 Input Type				
4566	CLI4 Input Label				
4D68	CLI4 Minimum				
4D6A	CLI4 Maximum				
4D6C	CLI4 Alarm				
4D6E	CLI4 Alarm Fn				
4D70	CLI4 Alarm Set				
4D72	CLI4 Alarm Delay				
4D74	CLI4 Trip				
4D76	CLI4 Trip Fn				
4D78	CLI4 Trip Set				
4D7A	CLI4 Trip Delay				
4D7C	CLI4 I< Alarm				
4D7E	CLI4 I< Alm Set				
4DA0	CLIO Output 1				
4DA2	CLO1 Output Type				
4DA4	CLO1 Set Values				
4DA6	CLO1 Parameter				
4DA8	CLO1 Minimum				
4DAA	CLO1 Maximum				
4DB0	CLIO Output 2				
4DB2	CLO2 Output Type				
4DB4	CLO2 Set Values				

4D00	CLIO PROTECTION				
Group 1 Settings		Group 1 Settings	Group 2 Settings	Group 3 Settings	Group 4 Settings
4DB6	CLO2 Parameter				
4DB8	CLO2 Minimum				
4DBA	CLO2 Maximum				
4DC0	CLIO Output 3				
4DC2	CLO3 Output Type				
4DC4	CLO3 Set Values				
4DC6	CLO3 Parameter				
4DC8	CLO3 Minimum				
4DCA	CLO3 Maximum				
4DD0	CLIO Output 4				
4DD2	CLO4 Output Type				
4DD4	CLO4 Set Values				
4DD6	CLO4 Parameter				
4DD8	CLO4 Minimum				
4DDA	CLO4 Maximum				

10.41 4E00 – System Checks

4E00	SYSTEM CHECKS				
Group 1 Settings		Group 1 Settings	Group 2 Settings	Group 3 Settings	Group 4 Settings
4E01	VOLTAGE MONITORS				
4E02	Live Voltage				
4E03	Dead Voltage				
4E04	Gen Under Voltage				
4E05	Gen Over Voltage				
4E06	CS UnderVoltage				
4E07	CS OverVoltage				
4E08	CS Diff Voltage				
4E09	CS Voltage Block				
4E0A	Gen Under Freq				
4E0B	Gen Over Freq				
4E10	CHECK SYNC				
4E11	CS1 Status				
4E12	CS1 Phase Angle				
4E13	CS1 Slip Control				
4E14	CS1 Slip Freq				
4E15	CS1 Slip Timer				
4E16	CS2 Status				
4E17	CS2 Phase Angle				
4E18	CS2 Slip Control				
4E19	CS2 Slip Freq				

4E00	SYSTEM CHECKS				
Group 1 Settings		Group 1 Settings	Group 2 Settings	Group 3 Settings	Group 4 Settings
4E1A	CS2 Slip Timer				
4E20	SYSTEM SPLIT				
4E21	SS Status				
4E22	SS Phase Angle				
4E23	SS Under V Block				
4E24	SS UnderVoltage				
4E25	SS Timer				
4E30	CB Close Time				

Commissioning Engineer

Date:

Customer Witness

Date:

Notes:

MAINTENANCE

CHAPTER 11

Date:	November 2011
Products covered by this chapter:	MiCOM P24x, P341 & P34x (P241, P242, P243, P341, P342, P343, P344, P345, P346 & P391)
Hardware Suffix:	P24x: P241 J P242/P243 K P341: J P34x: P342 J P343/P344/P345/P346 K P391 A
Software Version:	P24x (P241, P242 & P243): 57 P341: 36 & 71 P34x: P342, P343, P344, P345, P346 & P391 36
Connection Diagrams:	P24x (P241, P242 & P243): 10P241xx (xx = 01 to 02) 10P24201 10P24301 P341: 10P341xx (xx = 01 to 12) P34x (P342, P343, P344, P345, P346 & P391): 10P342xx (xx = 01 to 17) 10P343xx (xx = 01 to 19) 10P344xx (xx = 01 to 12) 10P345xx (xx = 01 to 07) 10P346xx (xx = 01 to 19) 10P391xx (xx = 01 to 02)

CONTENTS

FIGURES

TABLES

1 MAINTENANCE PERIOD

We recommend that products supplied by Schneider Electric receive periodic monitoring after installation. As with all products some deterioration with time is inevitable. Due to the critical nature of protective relays and their infrequent operation, you must confirm that all such protection devices are operating correctly at regular intervals.

Schneider Electric protective relays are designed for life in excess of 20 years.

The MiCOM P24x, P341 & P34x generator relays are self-supervising and so require less maintenance than earlier designs of relay. Most problems will result in an alarm so that remedial action can be taken. However, some periodic tests should be done to ensure that the relay is functioning correctly and the external wiring is intact.

If the customer's organization has a Preventative Maintenance Policy, you should include the recommended product checks in the regular program. Maintenance periods depend on many factors, such as:

- The operating environment
- The accessibility of the site
- The amount of available manpower
- The importance of the installation in the power system
- The consequences of failure

2 MAINTENANCE CHECKS

Although some functionality checks can be performed from a remote location using the communications ability of the relays, these are predominantly restricted to checking that the relay is measuring the applied currents and voltages accurately, and checking the circuit breaker maintenance counters. Therefore it is recommended that maintenance checks are performed locally (that is, at the substation itself).

Before carrying out any work on the equipment, you should be familiar with the contents of the Safety and Technical Data sections and the ratings on the equipment's rating label.

Warning	**Before carrying out any work on the equipment, you should be familiar with the contents of the Safety and Technical Data sections and the ratings on the equipment's rating label.** **If a P391 is used, you should also be familiar with the ratings and warning statements in the P391 technical manual sections.**

2.1 Alarms

Check the alarm status LED to identify if any alarm conditions exist. If the LED is ON, press the read key [] repeatedly to step through the alarms. Clear the alarms to switch the LED OFF.

2.2 Opto-Isolators

Check the relay responds when the opto-isolated inputs are energized See the Commissioning chapter for more details.

2.3 Output Relays

Check the output relays operate. See the Commissioning chapter for more details.

2.4 Measurement Accuracy

If the power system is energized, compare the values measured by the relay with known system values to check they are in the approximate expected range. If they are, the relay is performing the analog/digital conversion and calculations are being performed correctly. See the Commissioning chapter for more details.

Alternatively, check the values measured by the relay against known values injected into the relay using the test block, if fitted, or injected directly into the relay terminals. See the Commissioning chapter for more details.. These tests prove that the calibration accuracy is being maintained.

3 METHOD OF REPAIR

If the relay develops a fault in service, depending on the type of the fault, the watchdog contacts change state and an alarm condition is flagged. Due to the extensive use of surface-mount components, faulty PCBs cannot be repaired and should be replaced. Therefore either the complete relay or just the faulty PCB (identified by the in-built diagnostic software) can be replaced. See the Troubleshooting chapter for more details.

The preferred method is to replace the complete relay. This ensures the internal circuitry is protected against electrostatic discharge and physical damage at all times and avoids incompatibility between replacement PCBs. It may be difficult to remove an installed relay due to limited access to the back of the cubicle and rigidity of the scheme wiring.

Replacing PCBs can reduce transport costs but requires clean, dry conditions on site and higher skills from the person performing the repair. If the repair is not performed by an approved service center, the warranty will be invalidated.

Caution	**Before carrying out any work on the equipment, you should be familiar with the contents of the Safety and Technical Data sections and the ratings on the equipment's rating label.**

This should ensure that no damage is caused by incorrect handling of the electronic components.

3.1 Replacing the Complete IED/Relay

The case and the rear terminal blocks are designed to ease removal of the complete relay, without disconnecting the scheme wiring.

Caution	**Before working at the rear of the IED/relay, isolate all voltage and current supplies to the relay.**

Note	*The MiCOM range has integral current transformer shorting switches which will close when the heavy duty terminal block is removed.*

1. Disconnect the relay earth connection from the rear of the IED/relay.

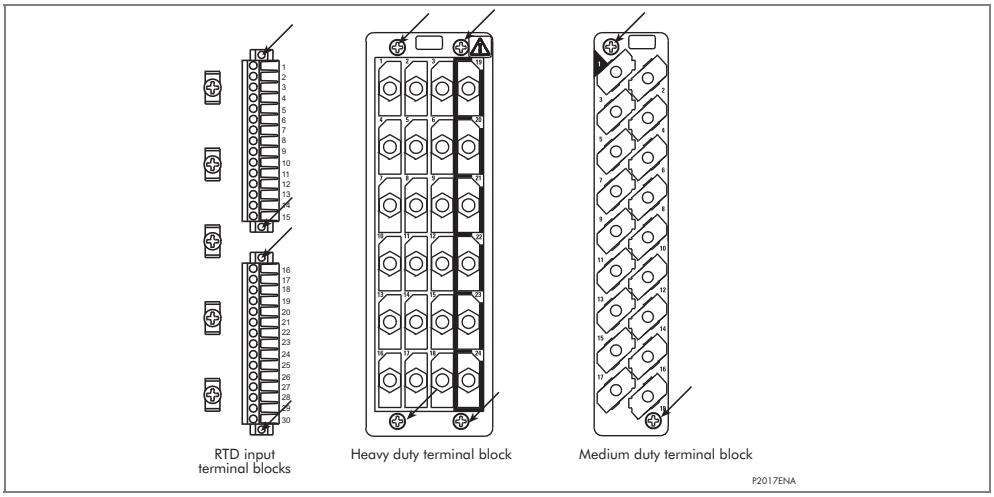

Figure 1 - Location of securing screws for terminal blocks

There are three types of terminal block used on the relay, RTD/CLIO input, heavy duty and medium duty, which are fastened to the rear panel using screws (crosshead on the heavy and medium duty blocks, slotted on RTD/CLIO input blocks), as in Figure 1.

Note	*The use of a magnetic bladed screwdriver is recommended to minimize the risk of the screws being left in the terminal block or lost.*

2. Without exerting excessive force or damaging the scheme wiring, pull the terminal blocks away from their internal connectors.
3. Remove the screws used to fasten the relay to the panel, rack, etc. These are the screws with the larger diameter heads that are accessible with the access covers are fitted and open.

Caution	**If the top and bottom access covers have been removed, do not remove the screws with the smaller diameter heads which are accessible. These screws hold the front panel on the relay.**

4. Withdraw the relay from the panel, rack, etc. carefully because it will be heavy due to the internal transformers.
5. To reinstall the repaired or replacement relay follow steps 1 to 5 in reverse. Relocate each terminal block in the correct position. Replace the case earth, IRIG-B and fiber optic connections. To help identify each terminal block, they are labeled alphabetically with ‘A’ on the left hand side when viewed from the rear.
6. Once reinstallation is complete, recommission the relay using the instructions in the Commissioning chapter.

3.2 Replacing a Printed Circuit Board (PCB)

Replacing PCBs and other internal components of protective relays must be undertaken only by Service Centers approved by Schneider Electric. Failure to obtain the authorization of Schneider Electric after sales engineers prior to commencing work may invalidate the product warranty.

Schneider Electric support teams are available world-wide, and it is strongly recommended that any repairs be entrusted to those trained personnel.

If the equipment fails to operate correctly refer to the Troubleshooting chapter, to help determine which PCB is faulty.

1. To replace any of the relay's PCBs it is necessary to first remove the front panel.

Caution	**Before removing the front panel to replace a PCB the auxiliary supply must be removed. It is also strongly recommended that the voltage and current transformer connections and trip circuit are isolated.**

2. Open the top and bottom access covers. With size 60TE/80TE cases the access covers have two hinge-assistance T-pieces which clear the front panel molding when the access covers are opened by more than 90°, to allow their removal.
3. If fitted, remove the transparent secondary front cover. A description of how to do this is given in the Introduction chapter.
4. By applying outward pressure to the middle of the access covers, they can be bowed sufficiently so as to disengage the hinge lug allowing the access cover to be removed. The screws that fasten the front panel to the case are now accessible.
5. The size 40TE case has four crosshead screws fastening the front panel to the case, one in each corner, in recessed holes. The size 60TE/80TE case has an additional two screws, one midway along each of the top and bottom edges of the front plate. Undo and remove the screws.

Caution	**Do not remove the screws with the larger diameter heads which are accessible when the access covers are fitted and open. These screws hold the relay in its mounting (panel or cubicle).**

6. When the screws have been removed, the complete front panel can be pulled forward and separated from the metal case.

Caution	**Take care at this stage because the front panel is connected to the rest of the relay circuitry by a 64-way ribbon cable. The internal circuitry of the equipment is now exposed and not protected against electrostatic discharges, dust ingress, etc. Therefore ESD precautions and clean working conditions should be maintained at all times.**

7. The ribbon cable is fastened to the front panel using an IDC connector; a socket on the cable itself and a plug with locking latches on the front panel. Gently push the two locking latches outwards which will eject the connector socket slightly. Remove the socket from the plug to disconnect the front panel.

The PCBs in the relay are now accessible. The Installation chapter shows the PCB locations for the generator relays in the size 40TE, 60TE and 80TE cases.

Note	*The numbers above the case outline identify the guide slot reference for each PCB. Each PCB has a label stating the corresponding guide slot number to ensure correct re-location after removal. To serve as a reminder of the slot numbering there is a label on the rear of the front panel metallic screen.*

The 64-way ribbon cable to the front panel also provides the electrical connections between PCBs with the connections being via IDC connectors.

The slots inside the case to hold the PCBs securely in place each correspond to a rear terminal block. Looking from the front of the relay these terminal blocks are labeled from right to left.

Note	*To ensure compatibility, always replace a faulty PCB with one of an identical part number. Table 1 lists the part numbers of each PCB type.*

Applicability	PCB	Description	Part number	Design suffix
P241 only	Front panel assembly		GN0004 001	A/C
P242 only	Front panel assembly		GN0006 001	C
P243 only	Front panel assembly		GN0068 001	C
P241 only	Front panel assembly		GN0178 001	J
P242 only	Front panel assembly		GN0277 001	K
P243 only	Front panel assembly		GN0341 001	K
P341 and P34x only	Main processor board		ZN0006 001	A/B/C
P341 and P34x only	Main processor board		ZN0026 001	J
P343/P344/P345/P346 only	Main processor board		ZN0041 001	K
	Power supply board	(24/48 V dc)	ZN0001 001	A/B
	Power supply board	(48/125 V dc)	ZN0001 002	A/B
	Power supply board	(110/250 V dc)	ZN0001 003	A/B
	Power supply board	(24/48 V dc)	ZN0021 001	C/J/K
	Power supply board	(48/125 V dc)	ZN0021 002	C/J/K
	Power supply board	(110/250 V dc)	ZN0021 003	C/J/K
	Relay board	7 Relay contacts	ZN0002 001	A
	Relay board	7 Relay contacts	ZN0031 001	B/C/J
	Relay board	8 Relay contacts	ZN0019 001	B/C/J/K
P341 and P34x only	Relay board	4 high break contacts	ZN0042 001	J/K
	Opto board	8 Opto inputs	ZN0005 002	A
	Opto board	8 Opto inputs	ZN0017 002	B/C
	Dual char. opto board	8 Opto inputs	ZN0017 012	J/K
	Dual input/output board	4 Opto inputs + 4 relay contacts	ZN0028 002	B/C
P341 and P34x only	Dual char. input/output board	4 Opto inputs + 4 relay contacts	ZN0028 011	J
	IRIG-B board (comms. assy.)	(IRIG-B modulated input only)	ZN0007 001	A/B/C/J/K
	IRIG-B board (comms. assy.)	(Fiber optic port only)	ZN0007 002	A/B/C/J/K

Applicability	PCB	Description	Part number	Design suffix
	IRIG-B board (comms. assy.)	(IRIG-B input modulated with fiber optic port)	ZN0007 003	A/B/C/J/K
	RTD board	10 RTDs	ZN0010 001	A/B/C/J
	RTD board	10 RTDs	ZN0044 001	J/K
	2nd rear comms. board	(2nd rear comms with IRIG-B modulated)	ZN0025 001	C/J/K
	2nd rear comms. board	(2nd rear comms port only)	ZN0025 002	C/J/K
	Ethernet board	(Ethernet port only)	ZN0049 001	J/K
	Ethernet board	(Ethernet with IRIG-B modulated)	ZN0049 002	J/K
	Ethernet board	(Ethernet with IRIG-B un-modulated)	ZN0049 003	J/K
	Ethernet board	(IRIG-B un-modulated input only)	ZN0049 004	J/K
	Ethernet board	Redundant Ethernet Self-Healing Ring, 2 multi-mode fiber ports + Modulated IRIG-B	ZN0071 001	J/K
	Ethernet board	Redundant Ethernet Self-Healing Ring, 2 multi-mode fiber ports + Un-modulated IRIG-B	ZN0071 002	J/K
	Ethernet board	Redundant Ethernet RSTP, 2 multi-mode fiber ports + Modulated	ZN0071 005	J/K
	Ethernet board	Redundant Ethernet RSTP, 2 multi-mode fiber ports + Un-modulated IRIG-B	ZN0071 006	J/K
	Ethernet board	Redundant Ethernet Dual-Homing Star, 2 multi-mode fiber ports + Modulated IRIG-B	ZN0071 007	J/K
	Ethernet board	Redundant Ethernet Dual-Homing Star, 2 multi-mode fiber ports + Un-modulated IRIG-B	ZN0071 008	J/K
	CLIO board	4 inputs + 4 outputs	ZN0018 001	C/J/K
	Transformer board		ZN0004 001	A/B/C/J/K
	Auxiliary transformer board		ZN0011 001	A/B/C/J
P345 only	Auxiliary transformer board		ZN0052 001	K
P24x only	Input board	8 Opto inputs	ZN0005 005	A
P24x only	Input board	8 Opto inputs	ZN0017 003	B/C
P341 and P34x only	Input board	8 Opto inputs	ZN0005 001	A
P341 and P34x only	Input board	8 Opto inputs	ZN0017 001	B/C
P341 and P34x only	Dual char. input board	8 Opto inputs	ZN0017 011	J
P345 only	Dual char. input board	8 Opto inputs	ZN0051 001/2	K
P24x only	Input module (transformer + auxiliary transformer + input board)	P241 Vn = 100/120 V	GN0010 005 GN0010 092	A/C/J
P24x only	Input module (transformer + auxiliary transformer + input board)	P242 Vn = 100/120 V	GN0010 005 GN0010 092	C/K
P24x only	Input module (transformer + auxiliary transformer + input board)	P243 Vn = 100/120 V	GN0012 011 GN0010 029	C/K
P341 only	Input module (transformer + auxiliary transformer + input board)	P341 Vn = 100/120 V	GN0010 004	A

Applicability	PCB	Description	Part number	Design suffix
P341 only	Input module (transformer + auxiliary transformer + input board)	P341 Vn = 380/480 V	GN0010 008	A
P342 only	Input module (transformer + auxiliary transformer + input board)	P342 Vn = 100/120 V	GN0010 009	A
P342 only	Input module (transformer + auxiliary transformer + input board)	P342 Vn = 380/480 V	GN0010 010	A
P343 only	Input module (transformer + auxiliary transformer + input board)	P343 Vn = 100/120 V	GN0012 002	A
P343 only	Input module (transformer + auxiliary transformer + input board)	P343 Vn = 380/480 V	GN0012 003	A
P341 only	Input module (transformer + auxiliary transformer + input board)	P341 Vn = 100/120 V	GN0010 024	B/C
P341 only	Input module (transformer + auxiliary transformer + input board)	P341 Vn = 380/480 V	GN0010 028	B/C
P342 only	Input module (transformer + auxiliary transformer + input board)	P342 Vn = 100/120 V	GN0010 029	B/C
P342 only	Input module (transformer + auxiliary transformer + input board)	P342 Vn = 380/480 V	GN0010 030	B/C
P343 only	Input module (transformer + auxiliary transformer + input board)	P343 Vn = 100/120 V	GN0012 009	B/C
P343 only	Input module (transformer + auxiliary transformer + input board)	P343 Vn = 380/480 V	GN0012 010	B/C
P341 only	Input module (transformer + auxiliary transformer + input board)	P341 Vn = 100/120 V	GN0010 078	J
P341 only	Input module (transformer + auxiliary transformer + input board)	P341 Vn = 380/480 V	GN0010 079	J
P341 only	Input module (transformer + auxiliary transformer + input board)	P341 (60TE) Vn = 100/120 V	GN0012 022	J
P341 only	Input module (transformer + auxiliary transformer + input board)	P341 (60TE) Vn = 380/480 V	GN0012 023	J
P342 only	Input module (transformer + auxiliary transformer + input board)	P342 Vn = 100/120 V	GN0010 080	J
P342 only	Input module (transformer + auxiliary transformer + input board)	P342 Vn = 380/480 V	GN0010 081	J
P343 only	Input module (transformer + auxiliary transformer + input board)	P343 Vn = 100/120 V	GN0012 024	J
P343 only	Input module (transformer + auxiliary transformer + input board)	P343 Vn = 380/480 V	GN0012 025	J
P344 only	Input module (transformer + auxiliary transformer + input board)	P344 Vn = 380/480 V	GN0012 026	J
P344 only	Input module (transformer + auxiliary transformer + input board)	P344 Vn = 380/480 V	GN0012 027	J
P345 only	Input module (transformer + auxiliary transformer + input board)	P345 Vn = 100/120 V	GN0407 001/2	K
P345 only	Input module (transformer + auxiliary transformer + input board)	P345 Vn = 380/480 V	GN0407 003/4	K
P391	Measurement board		ZN0066 001	A
P391	Coupling resistor board		ZN0064 001	A

Table 1 - PCB part numbers

3.2.1 Replacing the Main Processor Board

The main processor board is in the front panel. The other PCBs are in the main case of the relay.

1. Place the front panel with the user interface face-down and remove the six screws from the metallic screen, as shown in Figure 2. Remove the metal plate.
2. Remove the two screws, either side of the rear of the battery compartment recess, that hold the main processor PCB in position.
3. The user interface keypad is connected to the main processor board via a flex-strip ribbon cable. Carefully disconnect the ribbon cable at the PCB-mounted connector as it can easily be damaged by excessive twisting.

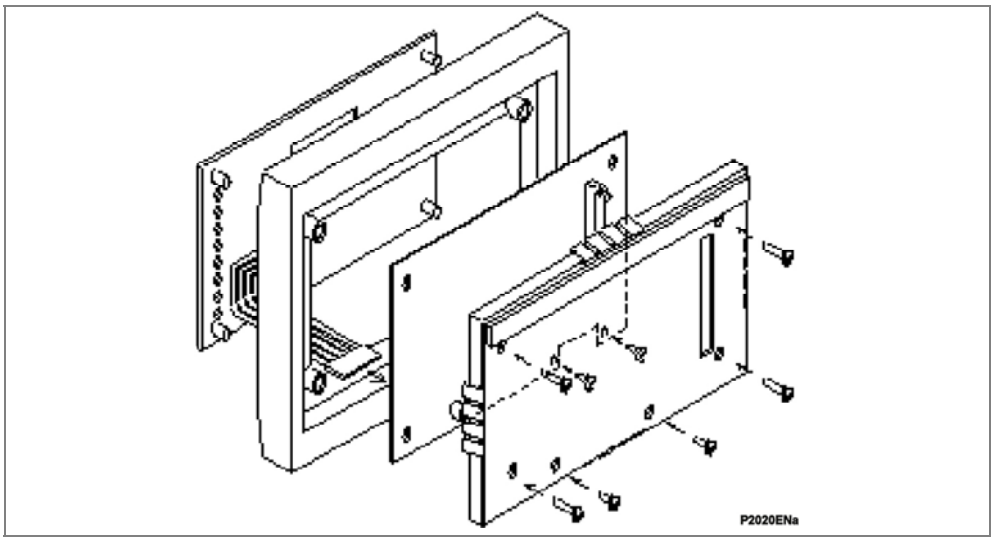

Figure 2 - Front panel assembly

4. The front panel can then be re-assembled with a replacement PCB using the reverse procedure. Make sure the ribbon cable is reconnected to the main processor board and all eight screws are re-fitted.
5. Refit the front panel using the reverse procedure to that given in section 3.2. After refitting and closing the access covers on size 60TE cases, press at the location of the hinge-assistance T-pieces so they click back into the front panel molding.

   After replacement of the main processor board, all the settings required for the application need to be re-entered. It is useful if an electronic copy of the application-specific settings is available on disk. This can reduce the time taken to re-enter the settings and hence the time the protection is out-of-service.
6. Once the relay has been reassembled after repair, recommission it in accordance with the instructions in the Commissioning chapter.

3.2.2 Replacing the IRIG-B/Second Rear Communications/Ethernet Board

Depending on the relay model number, the relay may have an IRIG-B board fitted with connections for IRIG-B signals, IEC60870-5-103 (VDEW) communications, both or not be present at all. The relay may also have the second communications board fitted with or without IRIG-B in same position. The relay may also have the Ethernet communications board fitted with or without IRIG-B in same position.

1. To replace a faulty board, disconnect all IRIG-B and/or IEC60870-5-103 and/or communications connections at the rear of the relay.
2. The board is secured in the case by two screws accessible from the rear of the relay, one at the top and another at the bottom, as shown in Figure 3. Remove these screws carefully as they are not captive in the rear panel of the relay.

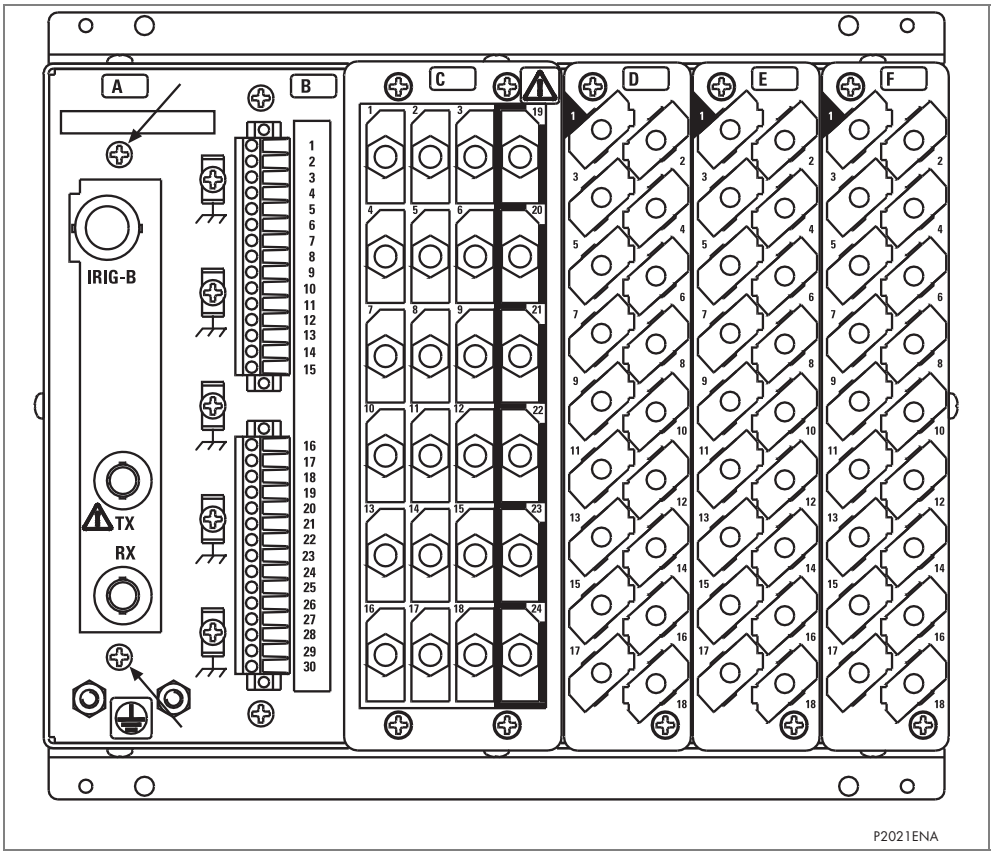

Figure 3 - Location of securing screws for IRIG-B board

3. Gently pull the IRIG-B board or second rear communications board or Ethernet board forward and out of the case.

   To help identify that the correct board has been removed, Figure 4 shows the layout of the IRIG-B board with both IRIG-B and IEC 60870-5-103 options fitted (ZN0007 003). The other versions (ZN0007 001 and ZN0007 002) use the same PCB layout but have fewer components fitted. Figure 5 shows the second communications board with IRIG-B.

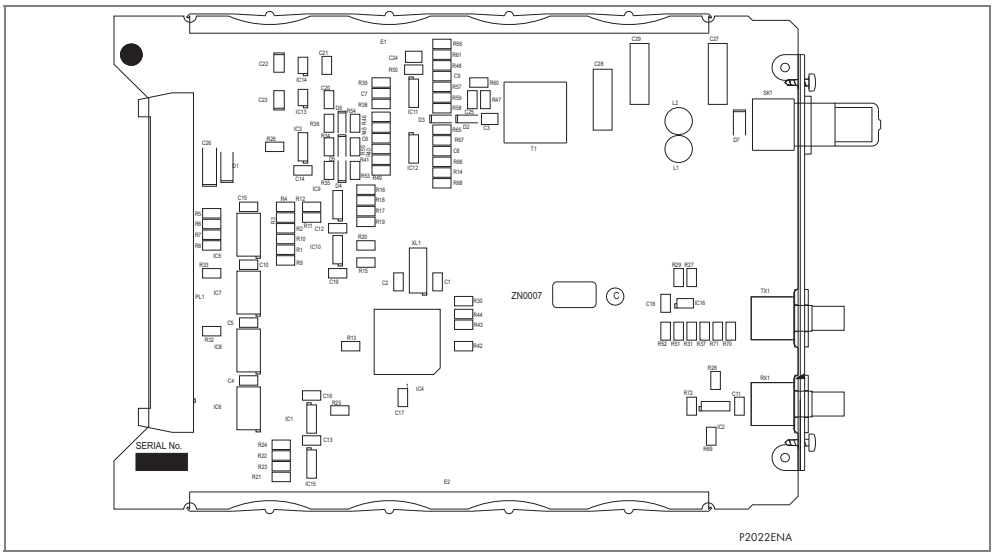

Figure 4 - Typical IRIG-B board

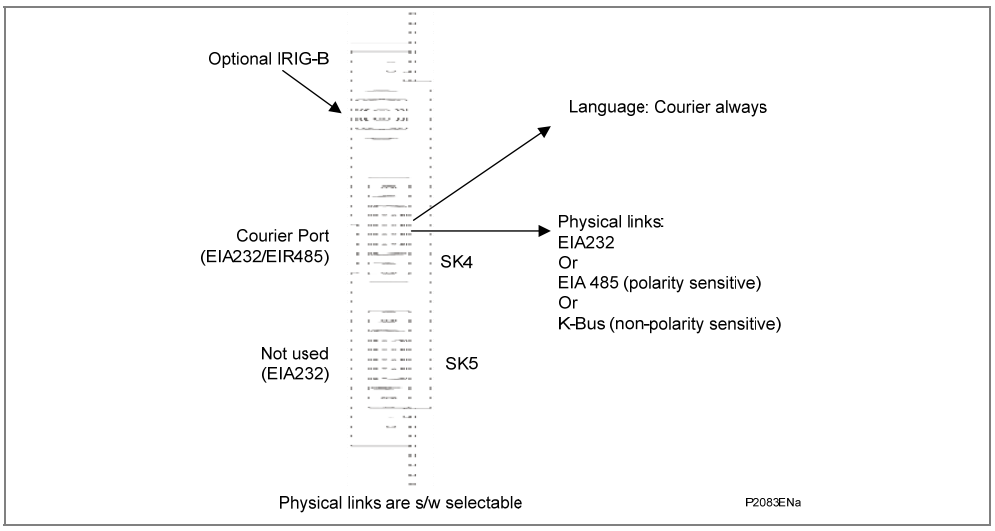

Figure 5 - Second rear communications board with IRIG-B

4. Before fitting the replacement PCB check that the number on the round label adjacent to the front edge of the PCB matches the slot number into which it will be fitted. If the slot number is missing or incorrect write the correct slot number on the label.

5. Fit the replacement PCB carefully into the appropriate slot. Make sure it is pushed fully back on to the rear terminal blocks and the securing screws are re-fitted.

6. Reconnect all IRIG-B and/or IEC 60870-5-103 and/or communications connections at the rear of the relay.

7. Refit the front panel using the reverse procedure to that in section 3.2. After refitting and closing the access covers on size 60TE/80TE cases, press at the location of the hinge-assistance T-pieces so they click back into the front panel molding.

8. Once the relay has been reassembled after repair, recommission it according to the instructions in the Commissioning chapter.

3.2.3 Replacing the Input Module

The input module comprises of two or three boards fastened together. In P241/P242/P341/P342 the input module consists of a transformer board and an input board. In P243/P343/P344/P345/P346 input module has three boards; input, transformer and auxiliary transformer.

1. The module is secured in the case by two screws on its right-hand side, accessible from the front of the relay, as shown in Figure 6. Remove these screws carefully as they are not captive in the front plate of the module.

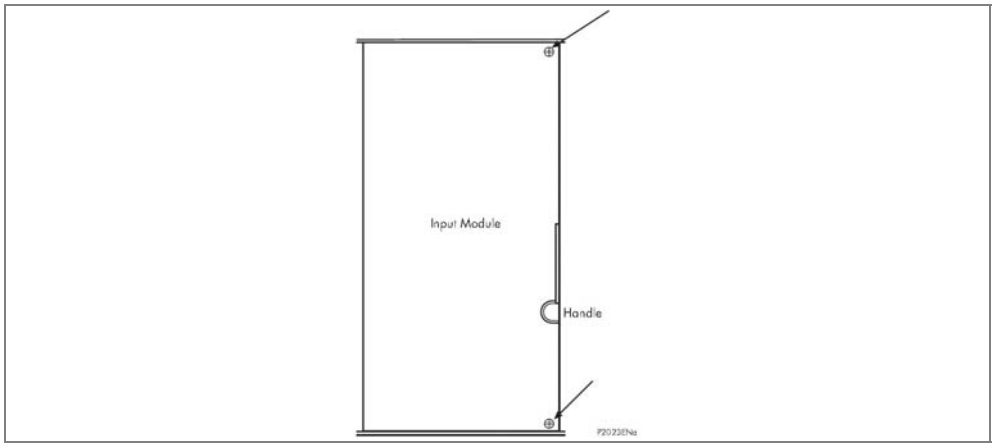

Figure 6 - Location of securing screws for input module

On the right-hand side of the analog input module in P241/P242/P341/P342 there is a small metal tab which brings out a handle. In the P243/P343/P344/P345/P346 there is an additional tab on the left hand side.

2. Grasp the handle or handles firmly, pull the module forward, away from the rear terminal blocks.

   A reasonable amount of force will be required to achieve this due to the friction between the contacts of the terminal blocks. In the P241/P242/P341/P342 there is one medium duty and one heavy duty block. In the P243/P343/P344/P345/P346 there is one medium duty and two heavy duty blocks.

Note	*Take care when withdrawing the input module as it will suddenly come loose once the friction of the terminal blocks has been overcome. This is particularly important with unmounted relays as the metal case will need to be held firmly whilst the module is withdrawn.*

3. Remove the module from the case, taking care as it is heavy because it contains all the relay's input voltage and current transformers.
4. Before fitting the replacement module check that the number on the round label near the front edge of the PCB matches the slot number into which it will be fitted. If the slot number is missing or incorrect write the correct number on the label.
5. Slot the replacement module in using the reverse procedure, ensuring that it is pushed fully back on to the rear terminal blocks. To help confirm that the module has been inserted fully there is a V-shaped cut-out in the bottom plate of the case that should be fully visible. Re-fit the securing screws.

Note	*The transformer and input boards in the module are calibrated together with the calibration data being stored on the input board. It is recommended that the complete module is replaced to avoid on-site recalibration having to be performed.*

6. Refit the front panel using the reverse procedure to that given in section 3.2. After refitting and closing the access covers on size 60TE/80TE cases, press the hinge-assistance T-pieces so that they click back into the front panel molding.

7. Once the relay has been reassembled after repair, recommission it in accordance with the instructions in the Commissioning chapter.

3.2.4 Replacing the Power Supply Board

Caution	**Before carrying out any work on the equipment, you should be familiar with the contents of the Safety and Technical Data sections and the ratings on the equipment's rating label.**

The power supply board is fastened to a relay board to form the power supply module and is located on the extreme left-hand side of all MiCOM relays.

8. Pull the power supply module forward, away from the rear terminal blocks and out of the case. A reasonable amount of force will be required to achieve this due to the friction between the contacts of the two medium-duty terminal blocks.

9. The two boards are held together with push-fit nylon pillars and can be separated by pulling them apart.

Note	*Take care when separating the boards to avoid damaging the inter-board connectors located near the lower edge of the PCBs towards the front of the power supply module.*

The power supply board has two large electrolytic capacitors which protrude through the other board that forms the power supply module. To help identify that the correct board has been removed, Figure 7 shows the layout of the power supply board for all voltage ratings.

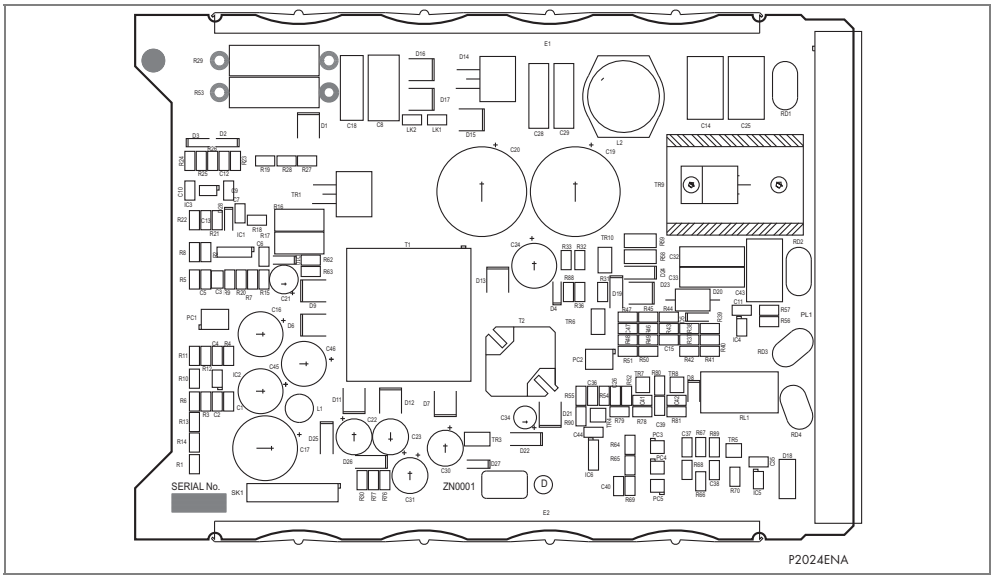

Figure 7 - Typical power supply board

10. Before re-assembling the module with a replacement PCB check that the number on the round label near the front edge of the PCB matches the slot number into which it will be fitted. If the slot number is missing or incorrect write the correct number on the label.

11. Re-assemble the module with a replacement PCB ensuring the inter-board connectors are firmly pushed together. Fit the four push-fit nylon pillars are securely located in their respective holes in each PCB.
12. Slot the power supply module back into the relay case, ensuring that it is pushed fully back on to the rear terminal blocks.
13. Refit the front panel using the reverse procedure to that given in section 3.2. After refitting and closing the access covers on size 60TE/80TE cases, press the hinge-assistance T-pieces so that they click back into the front panel molding.
14. Once the relay has been reassembled after repair, recommission it in accordance with the instructions in the Commissioning chapter.

3.2.5 Replacing the Relay Board in the Power Supply Module

1. Remove and replace the relay board in the power supply module as described in 3.2.4 above. The relay board is the one with holes cut in it to allow the transformer and two large electrolytic capacitors of the power supply board to protrude through. To help identify the board, see Figure 8.

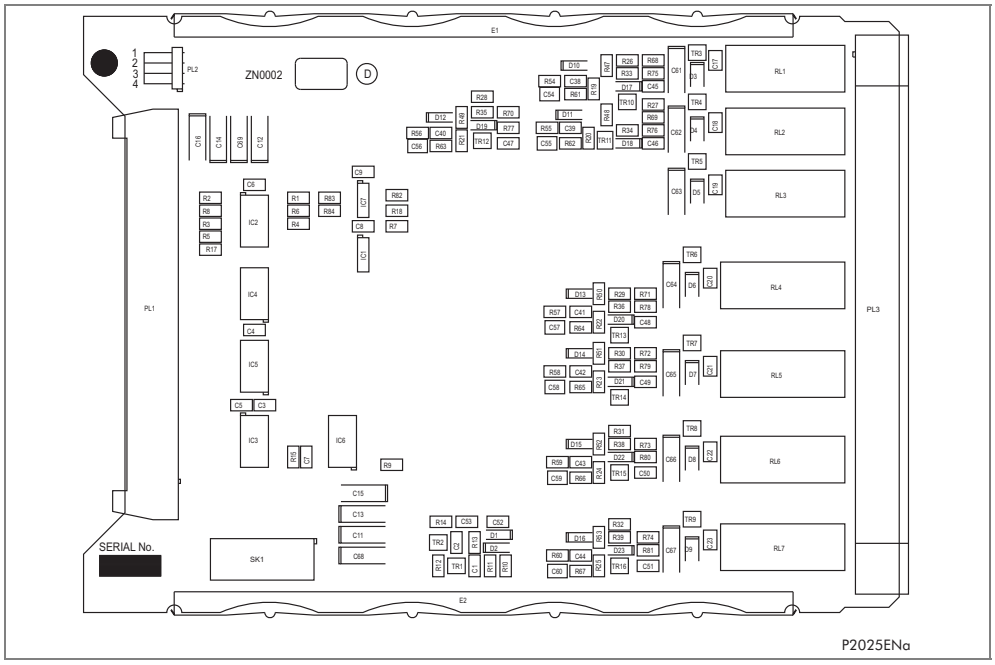

Figure 8 - Typical relay board

2. Before re-assembling the module with a replacement relay board check that the number on the round label near the front edge of the PCB matches the slot number into which it will be fitted. If the slot number is missing or incorrect write the correct number on the label.
3. Ensure the setting of the link (located above IDC connector) on the replacement relay board is the same as the one being replaced before replacing the module in the relay case.
4. Once the relay has been reassembled after repair, recommission it in accordance with the instructions in the Commissioning chapter.

3.2.6 Replacing the Opto and Separate Relay Boards (P343/P344/P345/P346 only)

The number of boards varies depending on the product which has been supplied.

- The P241/2/3 motor relays have additional boards.

- The P341 (60TE) relay has two additional boards compared to the P341 (40TE). The P341 (40TE/60TE) has a spare slot where an additional board can be fitted.
- The P343/P344/P345/P346 generator relay has two additional boards to the P341/P342.

These boards provide extra output relays and optically-isolated inputs to those in the power supply and input modules respectively.

1. To remove either, gently pull the faulty PCB forward and out of the case.
2. If the relay board is being replaced, ensure the setting of the link (located above IDC connector) on the replacement relay board is the same as the one being replaced. Figure 8 and Figure 9 show the layout of the relay and opto boards.

   If a new board is being added to increase the number of opto inputs or relay outputs, check the terminal numbers (B1, B2 for example) of the new inputs or outputs on the wiring diagram in the Installation chapter, for the rear slot position B/C/D etc. Then check the final assembly drawings for the correct jumper link position for that slot position so the relay will correctly recognize the new PCB.
3. Before fitting the replacement PCB check that the number on the round label near the front edge of the PCB matches the slot number into which it will be fitted. If the slot number is missing or incorrect write the correct number on the label.
4. Carefully slide the replacement board into the appropriate slot, ensuring that it is pushed fully back on to the rear terminal blocks.
5. Refit the front panel using the reverse procedure to that given in section 3.2. After refitting and closing the access covers on size 60TE/80TE cases, press the hinge-assistance T-pieces so that they click back into the front panel molding.

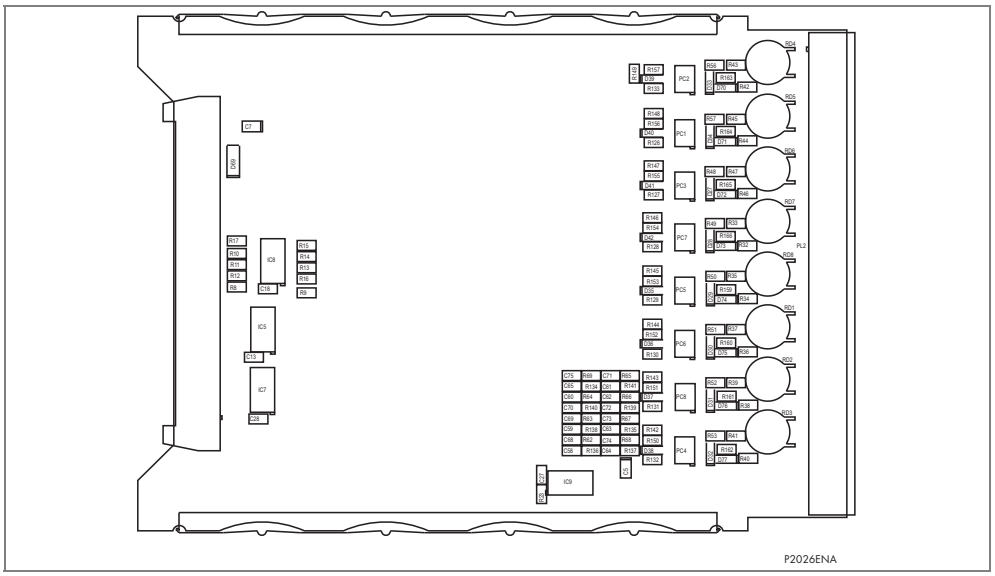

Figure 9 - Typical opto board

6. Once the relay has been reassembled after repair, recommission it according to the instructions in the Commissioning chapter.

3.2.7 Replacing the RTD Input Board

All external connections to the RTD board are made using the 15-way light-duty I/O connector SL3.5/15/90F. Two such connectors are used for the 10 RTDs.

1. To replace a faulty RTD input board, first remove the two 15-way terminal blocks, each is fastened to its other half by slotted screws above and below the row of terminals, as shown in Figure 10. Remove these screws carefully as they are not captive in the terminal blocks.
2. Without damaging the RTD wiring, pull the terminal blocks away from their internal halves. You do not need to disconnect the RTD screen connections from the spade connectors on the metal rear panel of the relay.

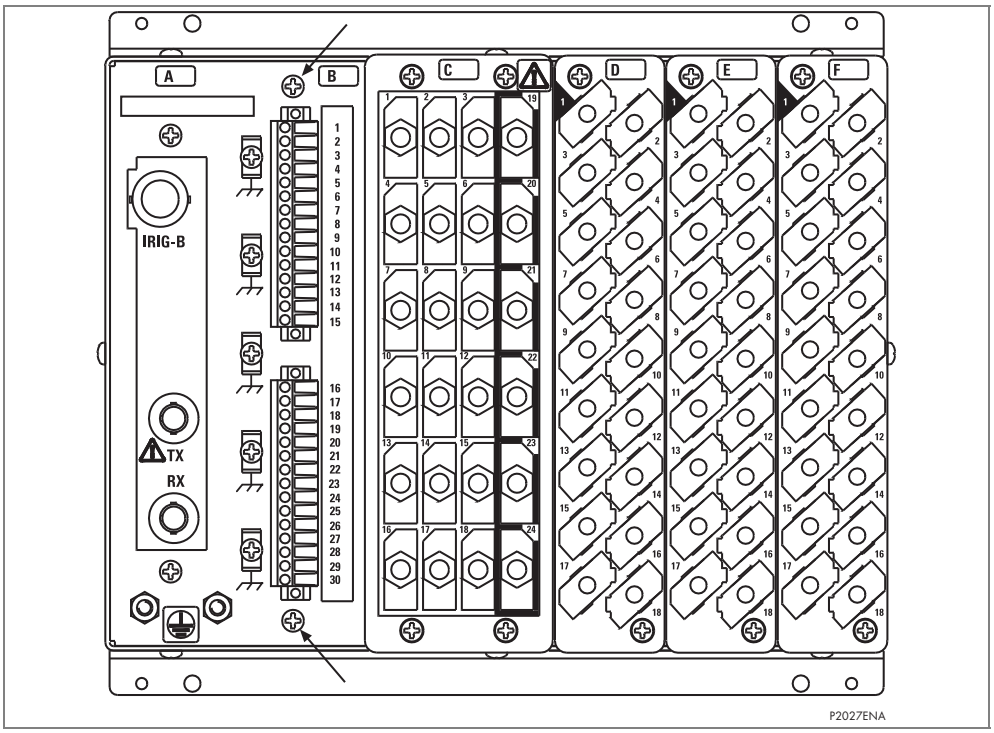

Figure 10 - Location of securing screws for RTD/CLIO input board

3. The RTD input board is secured in the case by two screws accessible from the rear of the relay, one at the top and another at the bottom, as shown in Figure 10. Remove these screws carefully as they are not captive in the rear panel of the relay.

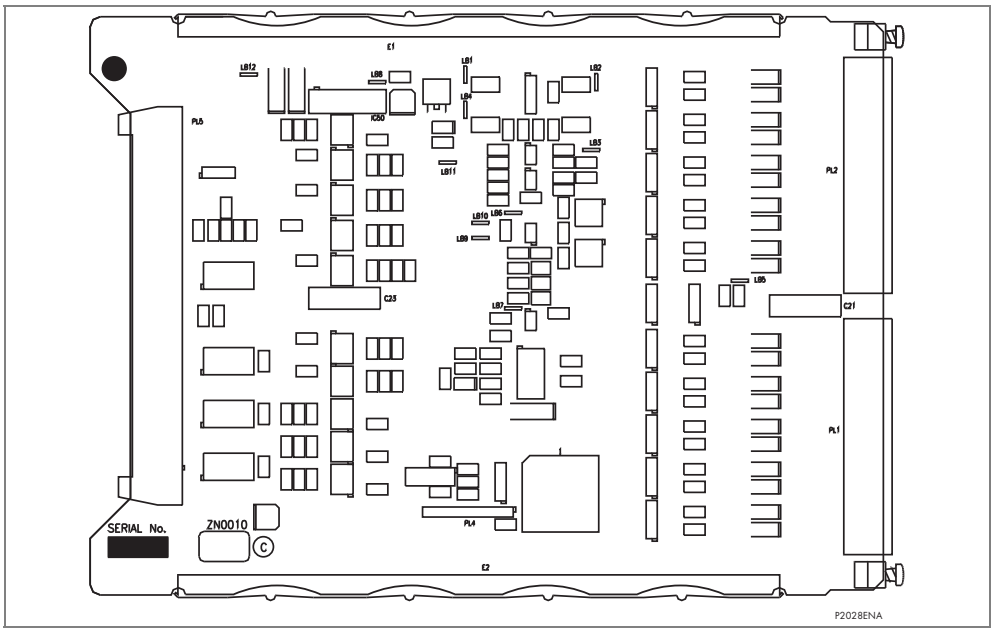

Figure 11 - Typical RTD input board

4. Gently pull the faulty RTD input PCB forward and out of the case. To help identify that the correct board has been removed, Figure 10 shows the PCB layout.
5. Carefully slot the replacement PCB back into the appropriate slot, ensuring that it is pushed fully back and the board securing screws are re-fitted.
6. Refit the RTD input terminal blocks, ensuring that they are in the correct location and that their fixing screws are replaced.
7. Once the relay has been reassembled after repair, recommission it according to the instructions in the Commissioning chapter.

3.2.8 Replacing the CLIO Input Board

All external connections to the current loop input output board are made using the same 15-way light-duty I/O connector SL3.5/15/90F as used on the RTD board. Two such connectors are used, one for the current loop outputs and one for the current loop inputs.

1. To replace a faulty CLIO board, first remove the two 15-way terminal blocks, each is fastened to its other half by slotted screws above and below the row of terminals, as shown in Figure 11. Remove these screws carefully as they are not captive in the terminal blocks.

Note	*The CLIO board occupies the same slot B as the RTD board in the 60TE case but uses a separate slot C in the 80TE case.*

2. Without damaging the CLIO wiring, pull the terminal blocks away from their internal halves. You do not need to disconnect the CLIO screen connections from the spade connectors on the metal rear panel of the relay.
3. The CLIO board is secured in the case by two screws accessible from the rear of the relay, one at the top and another at the bottom, as shown in Figure 11. Remove these screws carefully as they are not captive in the rear panel of the relay.
4. Gently pull the faulty CLIO PCB forward and out of the case.
5. Carefully slot the replacement PCB back into the appropriate slot, ensuring that it is pushed fully back and the board securing screws are re-fitted.
6. Refit the CLIO terminal blocks, ensuring that they are in the correct location and that their fixing screws are replaced.
7. Once the relay has been reassembled after repair, recommission it according to the instructions in the Commissioning chapter.

4 RE-CALIBRATION

Re-calibration is not required when a PCB is replaced unless it happens to be one of the boards in the input module, the replacement of either directly affect the calibration.

Although it is possible to carry out re-calibration on site, this requires test equipment with suitable accuracy and a special calibration program to run on a PC. It is therefore recommended that the work is carried out by the manufacturer, or entrusted to an approved service centre.

5 CHANGING THE BATTERY

Each relay has a battery to maintain status data and the correct time when the auxiliary supply voltage fails. The data maintained includes event, fault and disturbance records and the thermal state at the time of failure.

This battery will periodically need changing, although an alarm will be given as part of the relay's continuous self-monitoring in the event of a low battery condition.

If the battery-backed facilities are not required to be maintained during an interruption of the auxiliary supply, the steps below can be followed to remove the battery, but do not replace with a new battery.

Caution	**Before carrying out any work on the equipment, you should be familiar with the contents of the Safety and Technical Data sections and the ratings on the equipment's rating label.**

5.1 Instructions for Replacing the Battery

1. Open the bottom access cover on the front of the relay.
2. Gently extract the battery from its socket. If necessary, use a small insulated screwdriver to prize the battery free.
3. Ensure that the metal terminals in the battery socket are free from corrosion, grease and dust.

Caution	**When you remove the replacement battery from its packaging and place it into the battery holder, take care that the polarity markings on the battery agree with those adjacent to the socket.**

Note	*Only use a type ½AA Lithium battery with a nominal voltage of 3.6 V and safety approvals such as UL (Underwriters Laboratory), CSA (Canadian Standards Association) or VDE (Vereinigung Deutscher Elektrizitätswerke).*

4. Ensure that the battery is securely held in its socket and that the battery terminals are making good contact with the metal terminals of the socket.
5. Close the bottom access cover.

5.2 Post Modification Tests

To ensure that the replacement battery will maintain the time and status data if the auxiliary supply fails, check cell [0806: **DATE and TIME**, Battery Status] reads **Healthy**.

If you need further confirmation that the replacement battery is installed correctly, perform the commissioning test described in the Commissioning chapter.

5.3 Battery Disposal

Dispose of the removed battery according to the disposal procedure for Lithium batteries in the country in which the relay is installed.

6 CLEANING

Caution	**Before cleaning the relay ensure that all ac and dc supplies, current transformer and voltage transformer connections are isolated. This will prevent any chance of an electric shock whilst cleaning.**

Only clean the equipment with a lint-free cloth dampened with clean water.

Do not use detergents, solvents or abrasive cleaners as they may damage the relay's surface and leave a conductive residue.

7 P391 METHOD OF REPAIR

Caution **Before carrying out any work on the equipment, you should be familiar with the contents of the Safety and Technical Data sections and the ratings on the equipment's rating label.**

If the P391 Generator Rotor Earth Fault Unit (REFU) develops a fault whilst in service, either the entire REFU or an internal Printed Circuit Board (PCB) will need to be replaced. This will be dependant on working conditions of the installation environment.

The preferred method is to replace the complete REFU as it ensures that the internal circuitry is protected against ElectroStatic Discharge (ESD) and physical damage at all times. This also avoids the possibility of fitting an incompatible replacement PCB. Note that it may be necessary to replace a PCB where it is difficult to replace a complete REFU due to limited access or rigidity of the scheme wiring.

Replacing PCBs can reduce transport costs but requires clean, dry onsite conditions and requires a highly-skilled repair engineer. The warranty will be invalidated if the repair is not performed by a Schneider Electric approved service centre. Repairing faulty PCBs to component level must not be attempted as the use of unapproved replacement components may compromise equipment safety or degrade performance. Attempting to repair a faulty PCB will void the warranty and may cause subsequent damage if incorrectly undertaken.

Under certain equipment fault conditions, the P391 watchdog contacts will change state and an alarm condition will be flagged.

7.1 Replacing a Complete P391 REFU

Caution **Before carrying out any work on the equipment, you should be familiar with the contents of the Safety and Technical Data sections and the ratings on the equipment's rating label.**

1. Remove all connections to the P391 REFU.
2. Remove the screws used to fasten the REFU to the panel, rack or wall, paying special attention to support the unit as it becomes free from its mounting.
3. To reinstall the repaired or replacement REFU follow the above instructions in reverse, ensuring that each connection is made to the correct terminal and that the protective earth is replaced.
4. Once reinstallation is complete the REFU should be recommissioned using the P391 instructions in the Commissioning chapter.

7.2 Replacing P391 Internal PCBs

Caution **Before carrying out any work on the equipment, you should be familiar with the contents of the Safety and Technical Data sections and the ratings on the equipment's rating label.**

Caution **The internal circuitry of the P391 is not protected against ESD when the front panel is removed. ESD precautions and a clean working environment should be maintained. See section 2 of the Installation chapter, *P34x/EN IN*, 'Handling of Electronic Equipment' for information on ESD precautions.**

The P391 REFU comprises three internal PCBs; one PSU/Measurement PCB and two identical resistor coupling PCBs. Each PCB plugs directly into a socket mounted inside the metal case. (Each socket corresponds directly to a terminal block on the outside of the case). Polarizing guides on the PCB connector and metal guides inside the case ensure the PCB can be correctly connected in only one orientation.

Replacing printed circuit boards and other internal components of the REFU must be undertaken only by Service Centers approved by Schneider Electric. Failure to obtain the authorization of Schneider Electric after sales engineers prior to commencing work may invalidate the product warranty.

Schneider Electric support teams are available world-wide, and it is strongly recommended that any repairs be entrusted to those trained personnel.

1. To replace any of the REFU's PCBs it will be necessary to first remove the front panel. The P391 has twelve size-4 pan-head self-tapping screws fastening the front panel to the case. Undo and remove these screws.
2. When the screws have been removed, the complete front panel can be pulled forward and separated from the metal case.

   The PCBs within the REFU are now accessible. The P391 final assembly drawings in the Installation chapter, *P34x/EN IN* illustrate the PCB locations for the P391.

Notes *Each internal slot is labeled inside the casework with a reference number. This reference number will correspond to a label attached to the PCB inserted.*
To ensure compatibility, always replace a faulty PCB with one of an identical reference number. Table 2 lists PCB reference numbers.

PCB/Slot reference number	Description	Qty
ZN0066001	PSU and Measurement PCB	1
ZN0064001	72 kΩ Coupling Resistor PCB	2

Table 2 - PCB reference lists

3. Gently pull on the PCB to be replaced taking care not to damage any components with excess pressure or rough handling.
4. The replacement PCB should be carefully slid into the appropriate slot, ensuring that it is mates securely into the rear socket.
5. Refit the front panel using the reverse procedure to that given in section 7.1.
6. Once the REFU has been reassembled after repair, re-commission it in accordance with the instructions in Commissioning chapter.

7.3 Cleaning

Caution	**Isolate all voltage inputs, including the high voltage DC rotor winding supply before cleaning the P391 REFU**

You can clean the equipment using a lint-free cloth dampened with clean water. The use of detergents, solvents or abrasive cleaners is not recommended as they may damage the REFU's surface and leave a conductive residue.

TROUBLESHOOTING

CHAPTER 12

Date:	November 2011	
Hardware Suffix:	P14x (P141, P142, P143, P144 & P145) P24x (P241, P242 & P243) P341 P34x (P342, P343, P344 & P345) P445 P44y (P443 and P446) P547 P54x (P543, P544, P545 & P546) P64x (P642, P643 & P645): P841 P842 P846	J J (P241) & K (P242/P243) J J (P342) K (P343/P344/P345) A (P391) J K K K J (P642) & K (P643/645) K B J
Software Version:	P14x (P141, P142, P143, P144 & P145) P24x (P241, P242 & P243) P341 P34x (P342, P343, P344 & P345) P445 P44y (P443 and P446) P547 P54x (P543, P544, P545 & P546) P64x (P642, P643 & P645): P841 P842 P846	43 57 36 & 71 (with DLR) 36 35 & 36 0550 57 45 & 55 04 45 & 55 04 30
Connection Diagrams:	P14 (P141, P142, P143, P144 & P145): 10P141/2/3/4/5xx (xx = 01 to 07) P24x (P241, P242 & P243): 10P241xx (xx = 01 to 02) 10P24201 10P24301 P341: 10P341xx (xx = 01 to 12) P34x (P342, P343, P344 & P345): 10P342xx (xx = 01 to 17) 10P343xx (xx = 01 to 19) 10P344xx (xx = 01 to 12) 10P345xx (xx = 01 to 07) 10P391xx (xx = 01 to 02) P445: 10P445xx (xx = 01 to 04) P44y: 10P44303 (SH 01 and 03) 10P44304 (SH 01 and 03) 10P44305 (SH 01 and 03) 10P44306 (SH 01 and 03) 10P44600 10P44601 (SH 1 to 2) 10P44602 (SH 1 to 2) 10P44603 (SH 1 to 2)	P547: 10P54702xx (xx = 01 to 02) 10P54703xx (xx = 01 to 02) 10P54704xx (xx = 01 to 02) 10P54705xx (xx = 01 to 02) P54x: 10P54302 (SH 1 to 2) 10P54303 (SH 1 to 2) 10P54400 10P54404 (SH 1 to 2) 10P54405 (SH 1 to 2) 10P54502 (SH 1 to 2) 10P54503 (SH 1 to 2) 10P54600 10P54604 (SH 1 to 2) 10P54605 (SH 1 to 2) 10P54606 (SH 1 to 2) P64x: 10P642xx (xx = 01 to 10) 10P643xx (xx = 01 to 06) 10P645xx (xx = 01 to 09) P841: 10P841xx (xx = 01 to 02) 10P84100 10P841xx (xx = 01 to 03) P842: 10P842xx (xx = 01 to 02) P846: 10P846xx (xx = 01 to 07)

CONTENTS

TABLES

Notes:

1 INTRODUCTION

Warning **Before carrying out any work on the equipment, the user should be familiar with the contents of the Safety Guide or the Technical Data chapter of this Technical Manual and also the ratings on the equipment's rating label.**

The purpose of this section of the service manual is to allow an error condition on the relay to be identified so that appropriate corrective action can be taken.

Should the relay have developed a fault, it should be possible in most cases to identify which relay module requires attention. The Maintenance section (P14x/EN MT), advises on the recommended method of repair where faulty modules need replacing. It is not possible to perform an on-site repair to a faulted module.

In cases where a faulty relay/module is being returned to the manufacturer or one of their approved service centers, completed copy of the Repair/Modification Return Authorization Form located at the end of this section should be included.

2 INITIAL PROBLEM IDENTIFICATION

Consult Table 1 to find the description that best matches the problem experienced, then consult the section referenced to perform a more detailed analysis of the problem.

Symptom	Refer To
Relay fails to power up	Section 4
Relay powers up - but indicates error and halts during power-up sequence	Section 5
Relay Powers up but Out of Service LED is illuminated	Section 6
Error during normal operation	Section 7
Mal-operation of the relay during testing	Section 8

Table 1: Problem identification

3 POWER UP ERRORS

If the relay does not appear to power up then the following procedure can be used to determine whether the fault is in the external wiring, auxiliary fuse, power supply module of the relay or the relay front panel.

Test	Check	Action
1	Measure auxiliary voltage on terminals 1 and 2; verify voltage level and polarity against rating the label on front. Terminal 1 is –dc, 2 is +dc	If auxiliary voltage is present and correct, then proceed to test 2. Otherwise the wiring/fuses in auxiliary supply should be checked.
2	Do LEDs/and LCD backlight illuminate on power-up, also check the N/O watchdog contact for closing.	If they illuminate or the contact closes and no error code is displayed then error is probably in the main processor board (front panel). If they do not illuminate and the contact does not close then proceed to test 3.
3	Check Field voltage output (nominally 48V DC)	If field voltage is not present then the fault is probably in the relay power supply module.

Table 2: Failure of relay to power up

4 ERROR MESSAGE/CODE ON POWER-UP

During the power-up sequence of the relay self-testing is performed as indicated by the messages displayed on the LCD. If an error is detected by the relay during these self-tests, an error message will be displayed and the power-up sequence will be halted. If the error occurs when the relay application software is executing, a maintenance record will be created and the relay will reboot.

Test	Check	Action
1	Is an error message or code permanently displayed during power up?	If relay locks up and displays an error code permanently then proceed to test 2. If the relay prompts for input by the user proceed to test 4. If the relay re-boots automatically then proceed to test 5
2	Record displayed error, then remove and re-apply relay auxiliary supply.	Record whether the same error code is displayed when the relay is rebooted. If no error code is displayed then contact the local service center stating the error code and relay information. If the same code is displayed proceed to test 3.
3	Error code Identification Following text messages (in English) will be displayed if a fundamental problem is detected preventing the system from booting: Bus Fail address lines SRAM Fail data lines FLASH Fail format error FLASH Fail checksum Code Verify Fail These hex error codes relate to errors detected in specific relay modules: 0c140005/0c0d0000 0c140006/0c0e0000 Last 4 digits provide details on the actual error.	These messages indicate that a problem has been detected on the main processor board of the relay (located in the front panel). Input Module (inc. Opto-isolated inputs) Output Relay Cards Other error codes relate to problems within the main processor board hardware or software. It will be necessary to contact Schneider Electric with details of the problem for a full analysis.
4	Relay displays message for corrupt settings and prompts for restoration of defaults to the affected settings.	The power up tests have detected corrupted relay settings, it is possible to restore defaults to allow the power-up to be completed. It will then be necessary to re-apply the application-specific settings.
5	Relay resets on completion of power up - record error code displayed	Error 0x0E080000, Programmable Scheme Logic (PSL) error due to excessive execution time. Restore default settings by performing a power up with ⟨ and ⟩ keys depressed, confirm restoration of defaults at prompt using (↵) key. If relay powers up successfully, check PSL for feedback paths. Other error codes will relate to software errors on the main processor board, contact Schneider Electric.

Table 3: Power-up self-test error

5 OUT OF SERVICE LED ILLUMINATED ON POWER UP

Test	Check	Action	
1	Using the relay menu confirm whether the Commission Test/Test Mode setting is Enabled. Otherwise proceed to test 2.	If the setting is Enabled then disable the test mode and, verify that the Out of Service LED is extinguished.	
2	Select and view the last maintenance record from the menu (in the View Records).	Check for H/W Verify Fail this indicates a discrepancy between the relay model number and the hardware; examine the "**Maint. Data**", this indicates the causes of the failure using bit fields:	
		Bit	**Meaning**
		0	The application type field in the model number does not match the software ID
		1	The application field in the model number does not match the software ID
		2	The variant 1 field in the model number does not match the software ID
		3	The variant 2 field in the model number does not match the software ID
		4	The protocol field in the model number does not match the software ID
		5	The language field in the model number does not match the software ID
		6	The VT type field in the model number is incorrect (110V VTs fitted)
		7	The VT type field in the model number is incorrect (440V VTs fitted)
		8	The VT type field in the model number is incorrect (no VTs fitted)

Table 4: Out of service LED illuminated

6 ERROR CODE DURING OPERATION

The relay performs continuous self-checking, if an error is detected then an error message will be displayed, a maintenance record will be logged and the relay will reset (after a 1.6 second delay). A permanent problem (for example due to a hardware fault) will generally be detected on the power up sequence, following which the relay will display an error code and halt. If the problem was transient in nature then the relay should reboot correctly and continue in operation. The nature of the detected fault can be determined by examination of the maintenance record logged.

There are also two cases where a maintenance record will be logged due to a detected error where the relay will not reset. These are detection of a failure of either the field voltage or the lithium battery, in these cases the failure is indicated by an alarm message, however the relay will continue to operate.

If the field voltage is detected to have failed (the voltage level has dropped below threshold), then a scheme logic signal is also set. This allows the scheme logic to be adapted in the case of this failure (for example if a blocking scheme is being used).

In the case of a battery failure it is possible to prevent the relay from issuing an alarm using the setting under the Date and Time section of the menu. This setting '**Battery Alarm**' can be set to '**Disabled**' to allow the relay to be used without a battery, without an alarm message being displayed.

In the case of an RTD board failure, an alarm "RTD board fail" message is displayed, the RTD protection is disabled, but the operation of the rest of the relay functionality is unaffected.

7 MAL-OPERATION OF THE RELAY DURING TESTING

7.1 Failure of Output Contacts

An apparent failure of the relay output contacts may be caused by the relay configuration; the following tests should be performed to identify the real cause of the failure.

Note	*The relay self-tests verify that the coil of the contact has been energized, an error will be displayed if there is a fault in the output relay board.*

Test	Check	Action
1	Is the Out of Service LED illuminated?	Illumination of this LED may indicate that the relay is in test mode or that the protection has been disabled due to a hardware verify error (see Table 4).
2	Examine the Contact status in the Commissioning section of the menu.	If the relevant bits of the contact status are operated, proceed to test 4, if not proceed to test 3.
3	Verify by examination of the fault record or by using the test port whether the protection element is operating correctly.	If the protection element does not operate verify whether the test is being correctly applied. If the protection element does operate, it will be necessary to check the PSL to ensure that the mapping of the protection element to the contacts is correct.
4	Using the Commissioning/Test mode function apply a test pattern to the relevant relay output contacts and verify whether they operate (note the correct external connection diagram should be consulted). A continuity tester can be used at the rear of the relay for this purpose.	If the output relay does operate, the problem must be in the external wiring to the relay. If the output relay does not operate this could indicate a failure of the output relay contacts (note that the self-tests verify that the relay coil is being energized). Ensure that the closed resistance is not too high for the continuity tester to detect.

Table 5: Failure of output contacts

7.2 Failure of Opto-Isolated Inputs

The opto-isolated inputs are mapped onto the relay internal signals using the PSL. If an input does not appear to be recognized by the relay scheme logic the Commission Tests/Opto Status menu option can be used to verify whether the problem is in the opto-isolated input itself or the mapping of its signal to the scheme logic functions. If the opto-isolated input does appear to be read correctly then it will be necessary to examine its mapping within the PSL.

Ensure the voltage rating for the opto inputs has been configured correctly with applied voltage. If the opto-isolated input state is not being correctly read by the relay the applied signal should be tested. Verify the connections to the opto-isolated input using the correct wiring diagram and the correct nominal voltage settings in any standard or custom menu settings. Next, using a voltmeter verify that 80% opto setting voltage is present on the terminals of the opto-isolated input in the energized state. If the signal is being correctly applied to the relay then the failure may be on the input card itself. Depending on which opto-isolated input has failed this may require replacement of either the complete analog input module (the board within this module cannot be individually replaced without re-calibration of the relay) or a separate opto board.

7.3 Incorrect Analog Signals

The measurements may be configured in primary or secondary to assist. If it is suspected that the analog quantities being measured by the relay are not correct then the measurement function of the relay can be used to verify the nature of the problem. The measured values displayed by the relay should be compared with the actual magnitudes at the relay terminals. Verify that the correct terminals are being used (in particular the dual rated CT inputs) and that the CT and VT ratios set on the relay are correct. The correct 120 degree displacement of the phase measurements should be used to confirm that the inputs have been correctly connected.

7.4 PSL Editor Troubleshooting

A failure to open a connection could be because of one or more of the following:

- The relay address is not valid (note: this address is always 1 for the front port).
- Password is not valid
- Communication Set-up - COM port, Baud rate, or Framing - is not correct
- Transaction values are not suitable for the relay and/or the type of connection
- Modem configuration is not valid. Changes may be necessary when using a modem
- The connection cable is not wired correctly or broken. See MiCOM S1 connection configurations
- The option switches on any KITZ101/102 that is in use may be incorrectly set

7.4.1 Diagram Reconstruction after Recover from Relay

Although the extraction of a scheme from a relay is supported, the facility is provided as a way of recovering a scheme in the event that the original file is unobtainable.

The recovered scheme will be logically correct, but much of the original graphical information is lost. Many signals will be drawn in a vertical line down the left side of the canvas. Links are drawn orthogonally using the shortest path from A to B.

Any annotation added to the original diagram (titles, notes, etc.) are lost.

Sometimes a gate type may not be what was expected, e.g. a 1-input AND gate in the original scheme will appear as an OR gate when uploaded. Programmable gates with an inputs-to-trigger value of 1 will also appear as OR gates.

7.4.2 PSL Version Check

The PSL is saved with a version reference, time stamp and CRC check. This gives a visual check whether the default PSL is in place or whether a new application has been downloaded.

8 REPAIR AND MODIFICATION PROCEDURE

Please follow these steps to return an Automation product to us:

1. Get the Repair and Modification Authorization Form (RMA).
   A copy of the RMA form is shown at the end of this section.

2. Fill in the RMA form.
   Fill in only the white part of the form.
   Please ensure that all fields marked **(M)** are completed such as:
   - Equipment model
   - Model No. and Serial No.
   - Description of failure or modification required (please be specific)
   - Value for customs (in case the product requires export)
   - Delivery and invoice addresses
   - Contact details

3. Receive from local service contact, the information required to ship the product.
   Your local service contact will provide you with all the information:
   - Pricing details
   - RMA n°
   - Repair center address

   If required, an acceptance of the quote must be delivered before going to next stage.

4. Send the product to the repair center.
   Address the shipment to the repair center specified by your local contact.
   Ensure all items are protected by appropriate packaging: anti-static bag and foam protection.
   Ensure a copy of the import invoice is attached with the unit being returned.
   Ensure a copy of the RMA form is attached with the unit being returned.
   E-mail or fax a copy of the import invoice and airway bill document to your local contact.

Notes:

REPAIR/MODIFICATION RETURN AUTHORIZATION FORM

FIELDS IN GREY TO BE FILLED IN BY SCHNEIDER ELECTRIC PERSONNEL ONLY

Reference **RMA:** _____		Date:
Repair Center Address (for shipping)	**Service Type** ☐ Retrofit ☐ Warranty ☐ Paid service ☐ Under repair contract ☐ Wrong supply	LSC PO No.:
Schneider Electric - Local Contact Details Name: Telephone No.: Fax No.: E-mail:		

IDENTIFICATION OF UNIT

Fields marked (M) are mandatory, delays in return will occur if not completed.

Model No./Part No.: **(M)**	Site Name/Project:
Manufacturer Reference: **(M)**	Commissioning Date:
Serial No.: **(M)**	Under Warranty: ☐ Yes ☐ No
Software Version:	Additional Information:
Quantity:	Customer P.O (if paid):

FAULT INFORMATION

Type of Failure		**Found Defective**	
Hardware fail	☐	During FAT/inspection	☐
Mechanical fail/visible defect	☐	On receipt	☐
Software fail	☐	During installation/commissioning	☐
Other:		During operation	☐
		Other:	
Fault Reproducibility			
Fault persists after removing, checking on test bench	☐		
Fault persists after re-energization	☐		
Intermittent fault	☐		

Description of Failure Observed or Modification Required - *Please be specific* **(M)**

FOR REPAIRS ONLY

Would you like us to install an updated firmware version after repair?	☐ Yes	☐ No

CUSTOMS & INVOICING INFORMATION

Required to allow return of repaired items

Value for Customs (M)	
Customer Invoice Address ((M) if paid)	**Customer Return Delivery Address (full street address) (M)** Part shipment accepted ☐ Yes ☐ No **OR** Full shipment required ☐ Yes ☐ No
Contact Name: Telephone No.: Fax No.: E-mail:	Contact Name: Telephone No.: Fax No.: E-mail:

REPAIR TERMS

1. **Please ensure that a copy of the import invoice is attached with the returned unit, together with the airway bill document.** Please fax/e-mail a copy of the appropriate documentation **(M)**.
2. Please ensure the Purchase Order is released, for paid service, to allow the unit to be shipped.
3. Submission of equipment to Schneider Electric is deemed as authorization to repair and acceptance of quote.
4. Please ensure all items returned are marked as Returned for 'Repair/Modification' and **protected by appropriate packaging** (anti-static bag for each board and foam protection).

SCADA COMMUNICATIONS

CHAPTER 13

Date:	February 2012
Hardware Suffix:	J (P341)
Software Version:	36 and 71 (DLR)
Connection Diagrams:	10P341xx (xx = 01 to 12)

CONTENTS

FIGURES

TABLES

1 INTRODUCTION

This section describes the remote interfaces of the MiCOM relay in enough detail to allow integration within a substation communication network. As has been outlined in earlier sections, the relay supports a choice of one of four protocols via the rear communication interface, selected via the model number when ordering. This is in addition to the front serial interface and 2nd rear communications port, which supports the Courier protocol only.

The rear EIA(RS)485 interface is isolated and is suitable for permanent connection whichever protocol is selected. The advantage of this type of connection is that up to 32 relays can be ‘daisy chained’ together using a simple twisted pair electrical connection.

For each of the protocol options, the supported functions/commands will be listed together with the database definition. The operation of standard procedures such as extraction of event, fault and disturbance records, or setting changes, will also be described.

The descriptions contained in this section do not aim to fully detail the protocol itself. The relevant documentation for the protocol should be referred to for this information. This section serves to describe the specific implementation of the protocol in the relay.

2 REAR PORT INFORMATION AND CONNECTION ADVICE – EIA(RS)485 PROTOCOLS

2.1.1 Rear Communication Port EIA(RS)485 Interface

The rear EIA(RS)485 communication port is provided by a 3-terminal screw connector located on the back of the relay. See chapter the *Installation* chapter for details of the connection terminals. The rear port provides K-Bus/EIA(RS)485 serial data communication and is intended for use with a permanently wired connection to a remote control center. Of the three connections, two are for the signal connection, and the other is for the earth shield of the cable. When the K-Bus option is selected for the rear port, the two signal connections are not polarity conscious, however for MODBUS, IEC60870-5-103 and DNP3.0 care must be taken to observe the correct polarity.

The protocol provided by the relay is indicated in the relay menu in the 'Communications' column. Using the keypad and LCD, firstly check that the **Comms. settings** cell in the 'Configuration' column is set to **Visible**, then move to the **Communications** column. The first cell down the column shows the communication protocol being used by the rear port.

2.2 EIA(RS)485 Bus

The EIA(RS)485 two-wire connection provides a half-duplex fully isolated serial connection to the product. The connection is polarized and whilst the product's connection diagrams indicate the polarization of the connection terminals, it should be borne in mind that there is no agreed definition of which terminal is which. If the master is unable to communicate with the product, and the communication parameter's match, then it is possible that the two-wire connection is reversed.

EIA(RS)485 provides the capability to connect multiple devices to the same two-wire bus. MODBUS is a master-slave protocol, so one device will be the master, and the remaining devices will be slaves. It is not possible to connect two masters to the same bus, unless they negotiate bus access.

2.2.1 Bus Termination

The EIA(RS)485 bus must have 120 Ω (Ohm) ½ Watt terminating resistors fitted at either end across the signal wires - see Figure 1. Some devices may be able to provide the bus terminating resistors by different connection or configuration arrangements, in which case separate external components will not be required. However, this product does not provide such a facility, so if it is located at the bus terminus then an external termination resistor will be required.

2.2.2 Bus Connections and Topologies

The EIA(RS)485 standard requires that each device be directly connected to the physical cable that is the communications bus. Stubs and tees are expressly forbidden, as are star topologies. Loop bus topologies are not part of the EIA(RS)485 standard and are forbidden by it.

Two-core screened cable is recommended. The specification of the cable will be dependent on the application, although a multi-strand 0.5 mm^2 per core is normally adequate. Total cable length must not exceed 1000 m. The screen must be continuous and connected at one end, normally at the master connection point; it is important to avoid circulating currents, especially when the cable runs between buildings, for both safety and noise reasons.

This product does not provide a signal ground connection. If a signal ground connection is present in the bus cable then it must be ignored, although it must have continuity for

the benefit of other devices connected to the bus. At no stage must the signal ground be connected to the cables screen or to the product's chassis. This is for both safety and noise reasons.

2.2.3 Biasing

It may also be necessary to bias the signal wires to prevent jabber. Jabber occurs when the signal level has an indeterminate state because the bus is not being actively driven. This can occur when all the slaves are in receive mode and the master is slow to turn from receive mode to transmit mode. This may be because the master purposefully waits in receive mode, or even in a high impedance state, until it has something to transmit. Jabber causes the receiving device(s) to miss the first bits of the first character in the packet, which results in the slave rejecting the message and consequentially not responding. Symptoms of this are poor response times (due to retries), increasing message error counters, erratic communications, and even a complete failure to communicate.

Biasing requires that the signal lines be weakly pulled to a defined voltage level of about 1 V. There should only be one bias point on the bus, which is best situated at the master connection point. The DC source used for the bias must be clean; otherwise noise will be injected. Note that some devices may (optionally) be able to provide the bus bias, in which case external components will not be required.

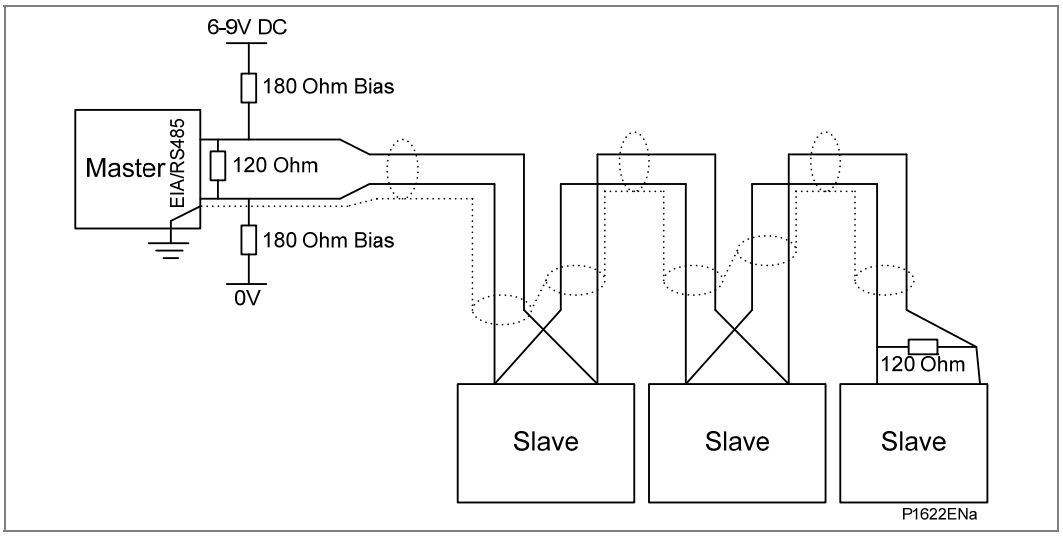

Figure 1 - EIA(RS)485 bus connection arrangements

It is possible to use the product's field voltage output (48 V DC) to bias the bus using values of 2.2 kΩ (½W) as bias resistors instead of the 180 Ω resistors shown in the above diagram. Note the following warnings apply:

- It is extremely important that the 120 Ω termination resistors are fitted. Failure to do so will result in an excessive bias voltage that may damage the devices connected to the bus.
- As the field voltage is much higher than that required, Schneider Electric cannot assume responsibility for any damage that may occur to a device connected to the network as a result of incorrect application of this voltage.
- Ensure that the field voltage is not being used for other purposes (i.e. powering logic inputs) as this may cause noise to be passed to the communication network.

2.2.4 Courier Communication

Courier is the communication language developed by Schneider Electric to allow remote interrogation of its range of protection relays. Courier works on a master/slave basis where the slave units contain information in the form of a database, and respond with information from the database when it is requested by a master unit.

The relay is a slave unit that is designed to be used with a Courier master unit such as S1 Studio, S10, PAS&T or a SCADA system. S1 Studio is a Windows NT4.0/98 compatible software package which is specifically designed for setting changes with the relay.

To use the rear port to communicate with a PC-based master station using Courier, a KITZ K-Bus to EIA(RS)232 protocol converter is required. This unit is available from Schneider Electric. A typical connection arrangement is shown in Figure 2. For more detailed information on other possible connection arrangements refer to the manual for the Courier master station software and the manual for the KITZ protocol converter. Each spur of the K-Bus twisted pair wiring can be up to 1000 m in length and have up to 32 relays connected to it.

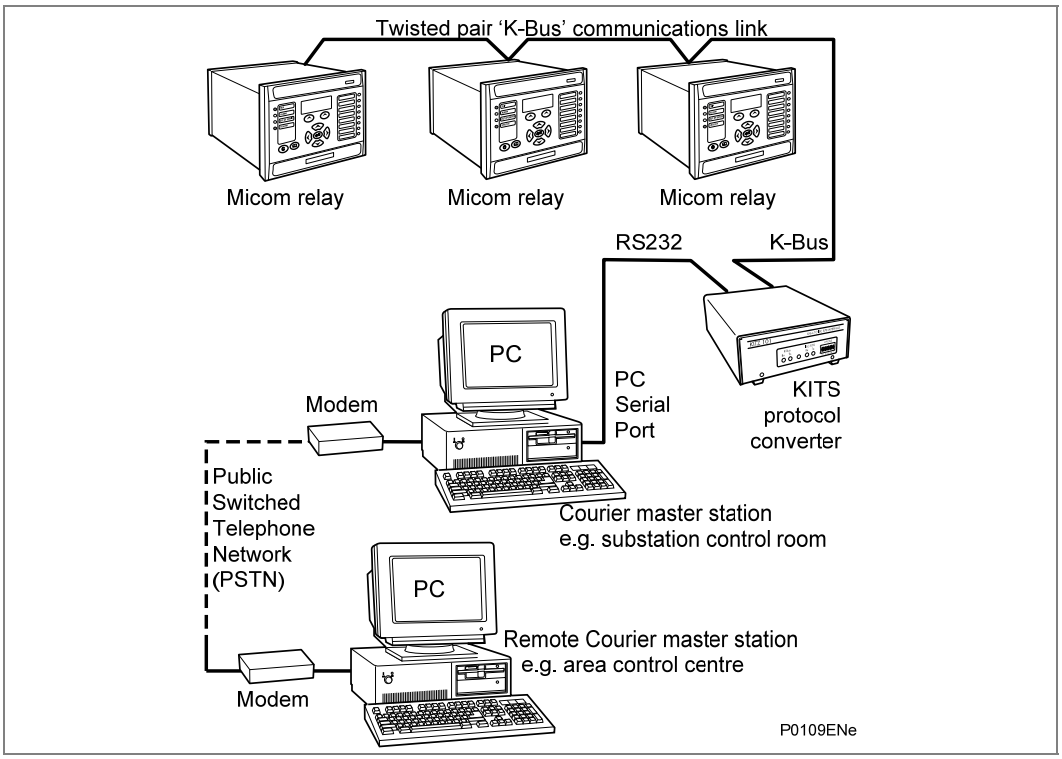

Figure 2 - Remote communication connection arrangements

Having made the physical connection to the relay, the relay's communication settings must be configured. To do this use the keypad and LCD user interface. In the relay menu firstly check that the **Comms. settings** cell in the **Configuration** column is set to **Visible**, then move to the **Communications** column. Only two settings apply to the rear port using Courier, the relay's address and the inactivity timer. Synchronous communication is used at a fixed baud rate of 64 kbits/s.
Move down the **Communications** column from the column heading to the first cell down which indicates the communication protocol:

```
RP1 Protocol
Courier
```

The next cell down the column controls the address of the relay:

```
RP1 Address
1
```

Since up to 32 relays can be connected to one K-Bus spur, as indicated in Figure 8, it is necessary for each relay to have a unique address so that messages from the master control station are accepted by one relay only. Courier uses an integer number between 0 and 254 for the relay address that is set with this cell. It is important that no two relays have the same Courier address. The Courier address is then used by the master station to communicate with the relay.
The next cell down controls the inactivity timer:

```
RP1 Inactiv timer
10.00 mins.
```

The inactivity timer controls how long the relay will wait without receiving any messages on the rear port before it reverts to its default state, including revoking any password access that was enabled. For the rear port this can be set between 1 and 30 minutes.

The next cell down the column controls the physical media used for the communication:

```
RP1 Physical link
Copper
```

The default setting is to select the copper electrical EIA(RS)485 connection. If the optional fiber optic connectors are fitted to the relay, then this setting can be changed to 'Fiber optic'. This cell is also invisible if second rear comms. port is fitted as it is mutually exclusive with the fiber optic connectors.
As an alternative to running Courier over K-Bus, Courier over EIA(RS)485 may be selected. The next cell down indicates the status of the hardware, e.g.:

```
RP1 Card status
EIA(RS)232 OK
```

The next cell allows for selection of the port configuration:

```
RP1 Port config.
EIA(RS)232
```

The port can be configured for EIA(RS)485 or K-Bus.

In the case of EIA(RS)485 the next cell selects the communication mode:

```
RP1 Comms. Mode
IEC60870 FT1.2
```

The choice is either IEC60870 FT1.2 for normal operation with 11-bit modems, or 10-bit no parity.
In the case of EIA(RS)485 the next cell down controls the baud rate. For K-Bus the baud rate is fixed at 64kbit/second between the relay and the KITZ interface at the end of the relay spur.

```
RP1 Baud rate
19200
```

Courier communications is asynchronous. Three baud rates are supported by the relay, '9600 bits/s', '19200 bits/s' and '38400 bits/s',

Note that protection and disturbance recorder settings that are modified using an on-line editor such as PAS&T must be confirmed with a write to the **Save changes** cell of the **Configuration** column. Off-line editors such as S1 Studio do not require this action for the setting changes to take effect.

2.2.5 MODBUS Communication

MODBUS is a master/slave communication protocol that can be used for network control. In a similar fashion to Courier, the system works by the master device initiating all actions and the slave devices, (the relays), responding to the master by supplying the requested data or by taking the requested action. MODBUS communication is achieved via a twisted pair connection to the rear port and can be used over a distance of 1000 m with up to 32 slave devices.

To use the rear port with MODBUS communication, the relay's communication settings must be configured. To do this use the keypad and LCD user interface. In the relay menu firstly check that the **Comms. settings** cell in the **Configuration** column is set to **Visible**, then move to the **Communications** column. Four settings apply to the rear port using MODBUS that are described below. Move down the **Communications** column from the column heading to the first cell down that indicates the communication protocol:

```
RP1 Protocol
MODBUS
```

The next cell down controls the MODBUS address of the relay:

```
RP1 MODBUS address
23
```

Up to 32 relays can be connected to one MODBUS spur, and therefore it is necessary for each relay to have a unique address so that messages from the master control station are accepted by one relay only. MODBUS uses an integer number between 1 and 247 for the relay address. It is important that no two relays have the same MODBUS address. The MODBUS address is then used by the master station to communicate with the relay.

The next cell down controls the inactivity timer:

```
RP1 Inactiv timer
10.00 mins.
```

The inactivity timer controls how long the relay will wait without receiving any messages on the rear port before it reverts to its default state, including revoking any password access that was enabled. For the rear port this can be set between 1 and 30 minutes.

The next cell down the column controls the baud rate to be used:

```
RP1 Baud rate
9600 bits/s
```

MODBUS communication is asynchronous. Three baud rates are supported by the relay, '9600 bits/s', '19200 bits/s' and '38400 bits/s'. It is important that whatever baud rate is selected on the relay is the same as that set on the MODBUS master station.

The next cell down controls the parity format used in the data frames:

```
RP1 Parity
None
```

The parity can be set to be one of 'None', 'Odd' or 'Even'. It is important that whatever parity format is selected on the relay is the same as that set on the MODBUS master station.

The next cell down the column controls the physical media used for the communication:

```
RP1 Physical link
Copper
```

The default setting is to select the copper electrical EIA(RS)485 connection. If the optional fiber optic connectors are fitted to the relay, then this setting can be changed to

'Fiber optic'. This cell is also invisible if second rear comms. port is fitted as it is mutually exclusive with the fiber optic connectors.

The next cell down controls the format of the Date/Time (software 30 or later):

```
MODBUS
IEC time standard
```

The format can be selected to either 'Standard' (as per IEC60870-5-4 'Binary Time 2a'), the default, or to 'Reverse' for compatibility with other products. For further information see section 4.16

2.2.6 IEC 60870-5 CS 103 communication

The IEC specification IEC 60870-5-103: Telecontrol Equipment and Systems, Part 5: Transmission Protocols Section 103 defines the use of standards IEC 60870-5-1 to IEC 60870-5-5 to perform communication with protection equipment. The standard configuration for the IEC 60870-5-103 protocol is to use a twisted pair connection over distances up to 1000m. As an option for IEC 60870-5-103, the rear port can be specified to use a fiber optic connection for direct connection to a master station. The relay operates as a slave in the system, responding to commands from a master station. The method of communication uses standardized messages which are based on the VDEW communication protocol.

To use the rear port with IEC 60870-5-103 communication, the relay's communication settings must be configured. To do this use the keypad and LCD user interface. In the relay menu firstly check that the **Comms. settings** cell in the **Configuration** column is set to **Visible**, then move to the **Communications** column. Four settings apply to the rear port using IEC 60870-5-103 that are described below.

Move down the **Communications** column from the column heading to the first cell that indicates the communication protocol:

```
RP1 Protocol
IEC 60870-5-103
```

The next cell down controls the IEC 60870-5-103 address of the relay:

```
RP1 address
162
```

Up to 32 relays can be connected to one IEC 60870-5-103 spur, and therefore it is necessary for each relay to have a unique address so that messages from the master control station are accepted by one relay only. IEC 60870-5-103 uses an integer number between 0 and 254 for the relay address. It is important that no two relays have the same IEC 60870-5-103 address. The IEC 60870-5-103 address is then used by the master station to communicate with the relay.

The next cell down the column controls the baud rate to be used:

```
RP1 Baud rate
9600 bits/s
```

IEC 60870-5-103 communication is asynchronous. Two baud rates are supported by the relay, '9600 bits/s' and '19200 bits/s'. It is important that whatever baud rate is selected on the relay is the same as that set on the IEC 60870-5-103 master station.

The next cell down controls the period between IEC 60870-5-103 measurements:

```
RP1 Meas. Period
30.00 s
```

The IEC 60870-5-103 protocol allows the relay to supply measurements at regular intervals. The interval between measurements is controlled by this cell, and can be set between 1 and 60 seconds.

The following cell is not currently used but is available for future expansion:

```
RP1 Inactiv timer
```

The next cell down the column controls the physical media used for the communication:

```
RP1 Physical link
Copper
```

The default setting is to select the copper electrical EIA(RS)485 connection. If the optional fiber optic connectors are fitted to the relay, then this setting can be changed to **Fiber optic**. This cell is also invisible if second rear comms. port is fitted as it is mutually exclusive with the fiber optic connectors.

The next cell down can be used for monitor or command blocking:

```
RP1 CS103 Blcking
```

There are three settings associated with this cell; these are:

- Disabled — No blocking selected.
- Monitor Blocking — When the monitor blocking DDB Signal is active high, either by energizing an opto input or control input, reading of the status information and disturbance records is not permitted. When in this mode the relay returns a **Termination of general interrogation** message to the master station.
- Command Blocking — When the command blocking DDB signal is active high, either by energizing an opto input or control input, all remote commands will be ignored (i.e. CB Trip/Close, change setting group etc.). When in this mode the relay returns a **negative acknowledgement of command** message to the master station.

2.2.7 DNP3.0 Communication

The DNP3.0 protocol is defined and administered by the DNP User Group. Information about the user group, DNP3.0 in general and protocol specifications can be found on their website:

www.dnp.org

The relay operates as a DNP3.0 slave and supports subset level 2 of the protocol plus some of the features from level 3. DNP3.0 communication is achieved via a twisted pair connection to the rear port and can be used over a distance of 1000m with up to 32 slave devices.

To use the rear port with DNP3.0 communication, the relay's communication settings must be configured. To do this use the keypad and LCD user interface. In the relay menu firstly check that the 'Comms. setting' cell in the 'Configuration' column is set to 'Visible', then move to the 'Communications' column. Four settings apply to the rear port using DNP3.0, which are described below. Move down the 'Communications' column from the column heading to the first cell that indicates the communications protocol:

```
RP1 Protocol
DNP3.0
```

The next cell controls the DNP3.0 address of the relay:

```
RP1 Address
232
```

Up to 32 relays can be connected to one DNP3.0 spur, and therefore it is necessary for each relay to have a unique address so that messages from the master control station are accepted by only one relay. DNP3.0 uses a decimal number between 1 and 65519 for the relay address. It is important that no two relays have the same DNP3.0 address. The DNP3.0 address is then used by the master station to communicate with the relay.

The next cell down the column controls the baud rate to be used:

```
RP1 Baud rate
9600 bits/s
```

DNP3.0 communication is asynchronous. Six baud rates are supported by the relay ‘1200bits/s’, ‘2400bits/s’, ‘4800bits/s’, ’9600bits/s’, ‘19200bits/s’ and ‘38400bits/s’. It is important that whatever baud rate is selected on the relay is the same as that set on the DNP3.0 master station.

The next cell down the column controls the parity format used in the data frames:

```
RP1 Parity
None
```

The parity can be set to be one of ‘None’, ‘Odd’ or ‘Even’. It is important that whatever parity format is selected on the relay is the same as that set on the DNP3.0 master station.

The next cell down the column controls the physical media used for the communication:

```
RP1 Physical link
Copper
```

The default setting is to select the copper electrical EIA(RS)485 connection. If the optional fiber optic connectors are fitted to the relay, then this setting can be changed to ‘Fiber optic’. This cell is also invisible if second rear comms. port is fitted as it is mutually exclusive with the fiber optic connectors.

The next cell down the column sets the time synchronization request from the master by the relay:

```
RP1 Time sync.
Enabled
```

The time sync. can be set to either enabled or disabled. If enabled it allows the DNP3.0 master to synchronize the time.

2.3 Second Rear Communication Port

For relays with Courier, MODBUS, IEC60870-5-103 or DNP3.0 protocol on the first rear communications port there is the hardware option of a second rear communications port, which will run the Courier language. This can be used over one of three physical links: twisted pair K-Bus (non-polarity sensitive), twisted pair EIA(RS)485 (connection polarity sensitive) or EIA(RS)232.

The settings for this port are located immediately below the ones for the first port as described in the *Installation* chapter. Move down the settings until the following sub heading is displayed:

```
Rear port2
(RP2)
```

The next cell down indicates the language, which is fixed at Courier for RP2:

```
RP2 Protocol
Courier
```

The next cell down indicates the status of the hardware, e.g.:

```
RP2 Card status
EIA(RS)232 OK
```

The next cell allows for selection of the port configuration:

```
RP2 Port config.
EIA(RS)232
```

The port can be configured for EIA(RS)232, EIA(RS)485 or K-Bus.

In the case of EIA(RS)232 and EIA(RS)485 the next cell selects the communication mode:

```
RP2 Comms. Mode
IEC60870 FT1.2
```

The choice is either IEC60870 FT1.2 for normal operation with 11-bit modems, or 10-bit no parity.

The next cell down controls the comms. port address:

```
RP2 Address
255
```

Since up to 32 relays can be connected to one K-Bus spur, as indicated in Figure 9, it is necessary for each relay to have a unique address so that messages from the master control station are accepted by one relay only. Courier uses an integer number between 0 and 254 for the relay address that is set with this cell. It is important that no two relays have the same Courier address. The Courier address is then used by the master station to communicate with the relay.

The next cell down controls the inactivity timer:

```
RP2 Inactivity timer
15 mins.
```

The inactivity timer controls how long the relay will wait without receiving any messages on the rear port before it reverts to its default state, including revoking any password access that was enabled. For the rear port this can be set between 1 and 30 minutes.

In the case of EIA(RS)232 and EIA(RS)485 the next cell down controls the baud rate. For K-Bus the baud rate is fixed at 64kbit/second between the relay and the KITZ interface at the end of the relay spur.

```
RP2 Baud rate
19200
```

Courier communications is asynchronous. Three baud rates are supported by the relay, ‘9600 bits/s’, ‘19200 bits/s’ and ‘38400 bits/s’.

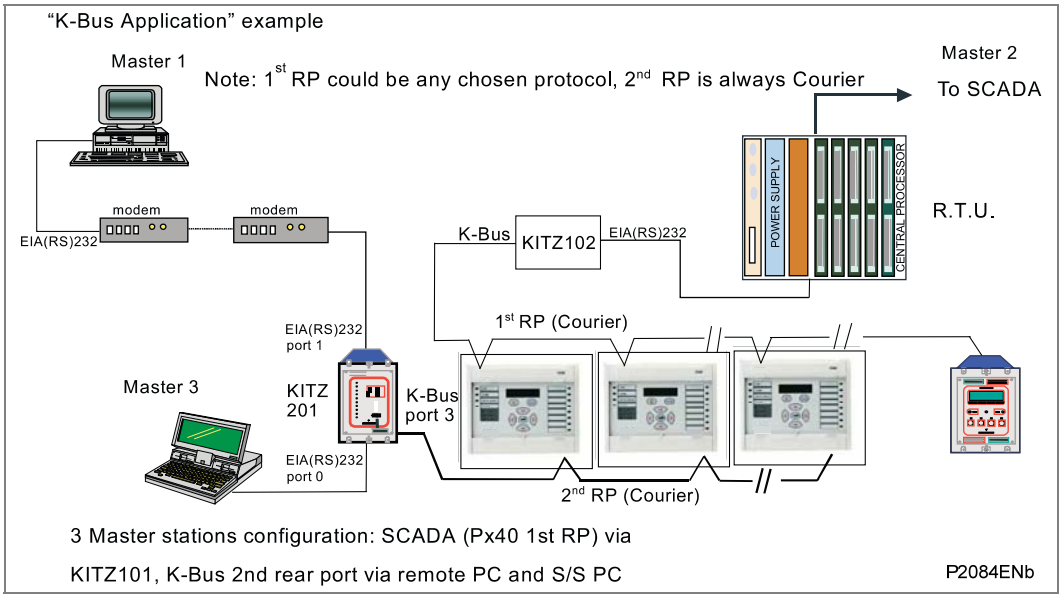

Figure 3 - Second rear port K-Bus application

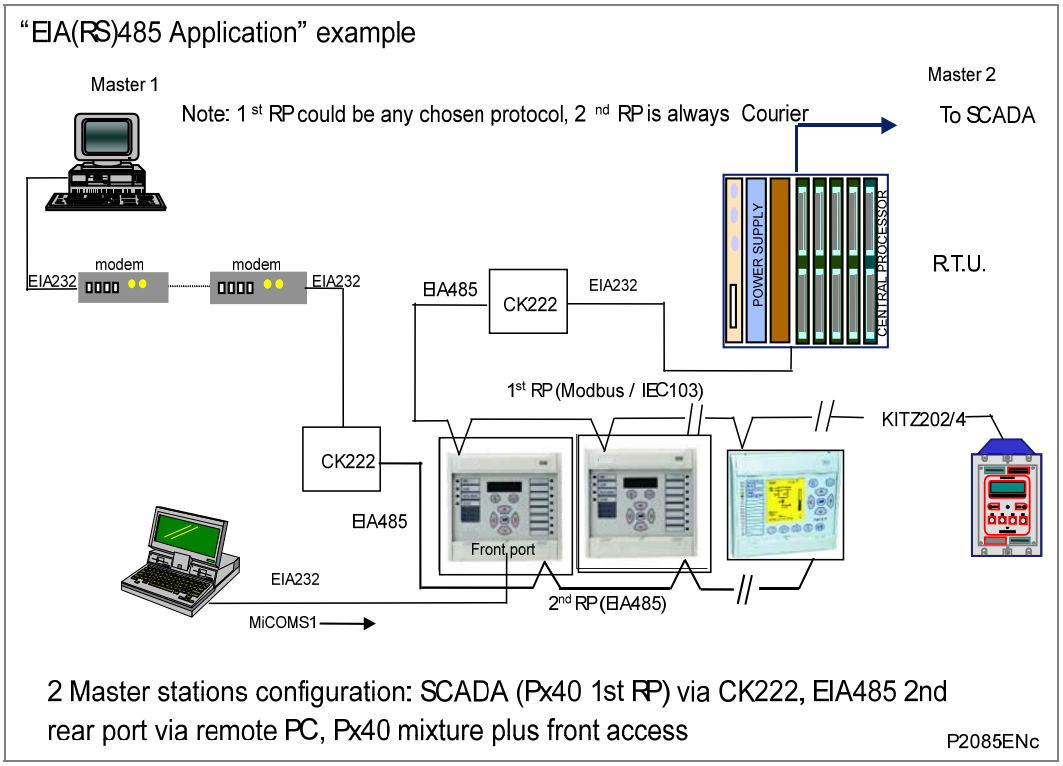

Figure 4 - Second rear port EIA(RS)485 example

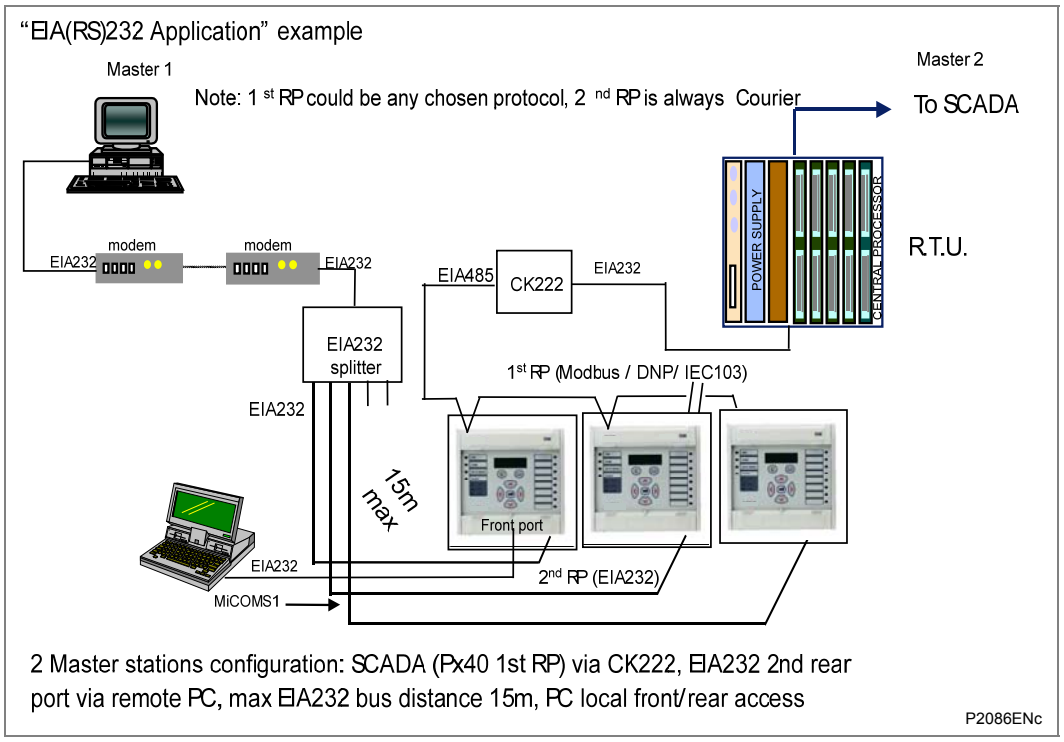

Figure 5 - Second rear port EIA(RS)232 example

3 COURIER INTERFACE

3.1 Courier Protocol

Courier is a Schneider Electric communication protocol. The concept of the protocol is that a standard set of commands is used to access a database of settings and data within the relay. This allows a generic master to be able to communicate with different slave devices. The application specific aspects are contained within the database itself rather than the commands used to interrogate it; i.e. the master station does not need to be pre-configured.
The same protocol can be used via two physical links K-Bus or EIA(RS)232.

K-Bus is based on EIA(RS)485 voltage levels with HDLC FM0 encoded synchronous signaling and its own frame format. The K-Bus twisted pair connection is unpolarized, whereas the EIA(RS)485 and EIA(RS)232 interfaces are polarized.

The EIA(RS)232 interface uses the IEC 60870-5 FT1.2 frame format.

The relay supports an IEC60870-5 FT1.2 connection on the front-port. This is intended for temporary local connection and is not suitable for permanent connection. This interface uses a fixed baud rate, 11-bit frame, and a fixed device address.

The rear interface is used to provide a permanent connection for K-Bus and allows multi-drop connection. Although K-Bus is based on EIA(RS)485 voltage levels it is a synchronous HDLC protocol using FM0 encoding. It is not possible to use a standard EIA(RS)232 to EIA(RS)485 converter to convert IEC 60870-5 FT1.2 frames to K-Bus. Nor is it possible to connect K-Bus to an EIA(RS)485 computer port. A protocol converter, such as the KITZ101, should be employed for this purpose.

The following documentation should be referred to for a detailed description of the Courier protocol, command-set and link description.

R6509	K-Bus Interface Guide
R6510	IEC60870 Interface Guide
R6511	Courier Protocol
R6512	Courier User Guide

3.2 Front Courier Port

The front EIA(RS)232 9 pin port supports the Courier protocol for one to one communication. The EIA(RS)232 port is actually compliant to EIA(RS)574; the 9-pin version of EIA(RS)232, see www.tiaonline.org. It is designed for use during installation and commissioning/maintenance and is not suitable for permanent connection. Since this interface will not be used to link the relay to a substation communication system, some of the features of Courier are not implemented. These are as follows:

- Automatic extraction of Event Records:
  - Courier Status byte does not support the Event flag.
  - Send Event/Accept Event commands are not implemented.
  - Automatic extraction of Disturbance records:
  - Courier Status byte does not support the Disturbance flag.
- Busy Response Layer:

Courier Status byte does not support the Busy flag, the only response to a request will be the final data.

- Fixed Address:

- The address of the front Courier port is always 1; the Change Device address command is not supported.

- Fixed Baud Rate:
  - 19200 bps.

Note	*Although automatic extraction of event and disturbance records is not supported it is possible to manually access this data via the front port.*

3.3 Supported Command Set

The following Courier commands are supported by the relay:

Protocol Layer:

Reset Remote Link
Poll Status
Poll Buffer*

Low Level Commands:

Send Event*
Accept Event*
Send Block
Store Block Identifier
Store Block Footer

Menu Browsing:

Get Column Headings
Get Column Text
Get Column Values
Get Strings
Get Text
Get Value
Get Column Setting Limits

Setting Changes:

Enter Setting Mode
Preload Setting
Abort Setting
Execute Setting
Reset Menu Cell
Set Value

Control Commands:

Select Setting Group
Change Device Address*
Set Real Time

Note	*Commands indicated with an * are not supported via the front Courier port.*

3.4 Relay Courier Database

The Courier database is a two dimensional structure with each cell in the database being referenced by a row and column address. Both the column and the row can take a range from 0 to 255. Addresses in the database are specified as hexadecimal values; e.g. 0A02 is column 0A (10 decimal) row 02. Associated settings/data will be part of the same column, row zero of the column contains a text string to identify the contents of the column, i.e. a column heading.

P341/EN MD contains the complete database definition for the relay. For each cell location the following information is stated:

- Cell Text
- Cell Datatype
- Cell value
- Whether the cell is settable, if so:
  - Minimum value
  - Maximum value
  - Step size
  - Password Level required to allow setting changes
  - String information (for Indexed String or Binary flag cells)

3.5 Setting Changes

(See R6512, Courier User Guide - Chapter 9)

Courier provides two mechanisms for making setting changes, both of these are supported by the relay. Either method can be used for editing any of the settings within the relay database.

3.5.1 Method 1

This uses a combination of three commands to perform a settings change:

Enter Setting Mode	Checks that the cell is settable and returns the limits.
Pre-load Setting	Places a new value to the cell, this value is echoed to ensure that setting corruption has not taken place, the validity of the setting is not checked by this action.
Execute Setting	Confirms the setting change, if the change is valid then a positive response will be returned, if the setting change fails then an error response will be returned.
Abort Setting	This command can be used to abandon the setting change.

This is the most secure method and is ideally suited to on-line editors as the setting limits are taken from the relay before the setting change is made. However this method can be slow if many settings are being changed as three commands are required for each change.

3.5.2 Method 2

The Set Value command can be used to directly change a setting, the response to this command will be either a positive confirm or an error code to indicate the nature of a failure. This command can be used to implement a setting more rapidly then the previous method, however the limits are not extracted from the relay. This method is most suitable for off-line setting editors such as S1 Studio, or for the issuing of pre-configured (SCADA) control commands.

3.5.3 Relay Settings

There are three categories of settings within the relay database:

- Control and support
- Disturbance recorder
- Protection settings group

Setting changes made to the control and support settings are implemented immediately and stored in non-volatile memory. Changes made to either the Disturbance recorder settings or the Protection Settings Groups are stored in a 'scratchpad' memory and are not immediately implemented by the relay.
To action setting changes stored in the scratchpad the Save Changes cell in the Configuration column must be written to. This allows the changes to either be confirmed and stored in non-volatile memory, or the setting changes to be aborted.

3.5.4 Setting Transfer Mode

If it is necessary to transfer all of the relay settings to or from the relay a cell within the Communication System Data column can be used. This cell (location BF03) when set to 1 makes all of the relay settings visible. Any setting changes made, with the relay set in this mode, are stored in scratchpad memory (including control and support settings). When the value of BF03 is set back to 0 any setting changes are verified and stored in non-volatile memory.

3.6 Event Extraction

Events can be extracted either automatically (rear port only) or manually (either Courier port). For automatic extraction all events are extracted in sequential order using the standard Courier event mechanism, this includes fault/maintenance data if appropriate. The manual approach allows the user to select events, faults, or maintenance data at random from the stored records.

3.6.1 Automatic Event Extraction

(See Chapter 7 Courier User Guide, publication R6512).
This method is intended for continuous extraction of event and fault information as it is produced. It is only supported via the rear Courier port.
When new event information is created the Event bit is set within the Status byte, this indicates to the Master device that event information is available. The oldest, unextracted event can be extracted from the relay using the Send Event command. The relay will respond with the event data, which will be either a Courier Type 0 or Type 3 event. The Type 3 event is used for fault records and maintenance records.

Once an event has been extracted from the relay, the Accept Event can be used to confirm that the event has been successfully extracted. If all events have been extracted then the event bit will reset, if there are more events still to be extracted the next event can be accessed using the Send Event command as before.

3.6.2 Event Types

Events will be created by the relay under these circumstances:

- Change of state of output contact
- Change of state of opto input
- Protection element operation
- Alarm condition
- Setting change
- Password entered/timed-out
- Fault record (Type 3 Courier Event)
- Maintenance record (Type 3 Courier Event)

3.6.3 Event Format

The Send Event command results in these fields being returned by the relay:

- Cell reference
- Time stamp
- Cell text
- Cell value

The Relay Menu Database, *P341/EN MD*, contains a table of the events created by the relay and indicates how the contents of the above fields are interpreted. Fault records and Maintenance records will return a Courier Type 3 event, which contains the above fields together with two additional fields:

- Event extraction column
- Event number

These events contain additional information that is extracted from the relay using the referenced extraction column. Row 01 of the extraction column contains a setting that allows the fault/maintenance record to be selected. This setting should be set to the event number value returned within the record; the extended data can be extracted from the relay by uploading the text and data from the column.

3.6.4 Manual Event Record Extraction

Column 01 of the database can be used for manual viewing of event, fault, and maintenance records. The contents of this column will depend on the nature of the record selected. It is possible to select events by event number and to directly select a fault record or maintenance record by number.

Event Record selection (Row 01)

This cell can be set to a value between 0 to 249 to select which of the 250 stored events is selected, 0 will select the most recent record; 249 the oldest stored record. For simple event records, (Type 0) cells 0102 to 0105 contain the event details. A single cell is used to represent each of the event fields. If the event selected is a fault or maintenance record (Type 3) then the remainder of the column will contain the additional information.

Fault Record Selection (Row 05)

This cell can be used to directly select a fault record using a value between 0 and 4 to select one of up to five stored fault records. (0 will be the most recent fault and 4 will be the oldest). The column will then contain the details of the fault record selected.

Maintenance Record Selection (Row F0)

This cell can be used to select a maintenance record using a value between 0 and 4 and operates in a similar way to the fault record selection.

If this column is used to extract event information from the relay the number associated with a particular record will change when a new event or fault occurs.

3.7 Disturbance Record Extraction

The stored disturbance records within the relay are accessible in a compressed format via the Courier interface. The records are extracted using column B4. Cells required for extraction of uncompressed disturbance records are not supported.

Select Record Number (Row 01)

This cell can be used to select the record to be extracted. Record 0 will be the oldest unextracted record, already extracted older records will be assigned positive values, and negative values will be used for more recent records. To facilitate automatic extraction via the rear port the Disturbance bit of the Status byte is set by the relay whenever there are unextracted disturbance records.

Once a record has been selected, using the above cell, the time and date of the record can be read from cell 02. The disturbance record itself can be extracted using the block transfer mechanism from cell B00B. It should be noted that the file extracted from the relay is in a compressed format. It will be necessary to use S1 Studio to de-compress this file and save the disturbance record in the COMTRADE format.

As has been stated, the rear Courier port can be used to automatically extract disturbance records as they occur. This operates using the standard Courier mechanism defined in Chapter 8 of the Courier User Guide. The front Courier port does not support automatic extraction although disturbance record data can be extracted manually from this port.

3.8 Programmable Scheme Logic (PSL) Settings

The Programmable Scheme Logic (PSL) settings can be uploaded from and downloaded to the relay using the block transfer mechanism defined in Chapter 12 of the Courier User Guide.

The following cells are used to perform the extraction:

- B204 Domain/ — Used to select either PSL settings (Upload or download) or PSL configuration data (Upload only)
- B208 Sub-Domain — Used to select the Protection Setting Group to be uploaded/downloaded.
- B20C Version — Used on a download to check the compatibility of the file to be downloaded with the relay.
- B21C Transfer Mode — Used to set-up the transfer process.
- B120 Data Transfer Cell — Used to perform upload/download.

The PSL settings can be uploaded and downloaded to and from the relay using this mechanism. If it is necessary to edit the settings S1 Studio must be used as the data format is compressed. S1 Studio also performs checks on the validity of the settings before they are downloaded to the relay.

4 MODBUS INTERFACE

The MODBUS interface is a master/slave protocol and it is defined by MODBUS.org:

www.modbus.org

MODBUS Serial Protocol Reference Guide: PI-MBUS-300 Rev. E

4.1 Serial Interface

The MODBUS interface uses the first rear EIA(RS)485 (RS485) two-wire port “RP1”. The port is designated “EIA(RS)485/K-Bus Port” on the external connection diagrams.

The interface uses the MODBUS “RTU” mode of communication, rather than the “ASCII” mode since it provides for more efficient use of the communication bandwidth and is in wide spread use. This mode of communication is defined by the MODBUS standard, noted above.

4.1.1 Character Framing

The character framing is 1 start bit, 8 bit data, either 1 parity bit and 1 stop bit, or 2 stop bits. This gives 11 bits per character.

4.1.2 Maximum MODBUS Query and Response Frame Size

The maximum query and response frame size is limited to 260 bytes in total. (This includes the frame header and CRC footer, as defined by the MODBUS protocol.).

4.1.3 User Configurable Communications Parameters

The following parameters can be configured for this port using the product’s front panel user interface (in the communications sub-menu):

- Baud rate: 9600, 19200, 38400 bps
- Device address: 1 - 247
- Parity: Odd, even, none.
- Inactivity time (see Note 2): 1 - 30 minutes

Note 1	*The MODBUS interface communication parameters are not part of the product’s setting file and cannot be configured with the S1 Studio setting support tool.*
Note 2	*The inactivity timer is started (or restarted) whenever the active password level is reduced upon the entry of a valid password, or a change is made to the setting scratchpad. When the timer expires, the password level is restored to its default level and any pending (uncommitted) setting changes on the scratch pad are discarded. The inactivity timer is disabled when the password level is at its default value and there are no settings pending on the scratchpad. See section 4.13.*

4.2 Supported MODBUS Query Functions

The MODBUS protocol provides numerous query functions, of which the product supports the subset in Table 1. The product will respond with exception code 01 if any other query function is received by it.

Query function code	MODBUS query name	Application
01	Read Coil Status	Read status of output contacts (0x addresses)
02	Read Input Status	Read status of opto-isolated status inputs (1x addresses)
03	Read Holding Registers	Read setting values (4x addresses)
04	Read Input Registers	Read measurement values (3x addresses)
06	Preset Single Register	Write single setting value (4x addresses)
07	Read Exception Status	Read relay status, same value as register 3x1
08	Diagnostics	Application defined by the MODBUS protocol specification
11	Fetch Communication Event Counter	
12	Fetch Communication Event Log	
16	Preset Multiple Registers	Write multiple setting values (4x addresses)

Table 1 - MODBUS query functions supported by the product

4.3 MODBUS Response Code Interpretation

Code	MODBUS response name	Product interpretation
01	Illegal Function Code	The function code transmitted is not supported.
02	Illegal Data Address	The start data address in the request is not an allowable value. If any of the addresses in the range cannot be accessed due to password protection then all changes within the request are discarded and this error response will be returned. *Note* *If the start address is correct but the range includes non-implemented addresses this response is not produced.*
03	Illegal Value	A value referenced in the data field transmitted by the master is not within range. Other values transmitted within the same packet will be executed if inside range.
04	Slave Device Failure	An exception arose during the processing of the received query that is not covered by any of the other exception codes in this table.
05	Acknowledge	Not used.
06	Slave Device Busy	The write command cannot be implemented due to the product's internal database being locked by another interface. This response is also produced if the product is busy executing a previous request.

Table 2 - MODBUS response code interpretation

4.4 Maximum Query and Response Parameters

Table 3 shows the maximum amount of data that the product can process for each of the supported query functions (see section 4.2) and the maximum amount of data that can be sent in a corresponding response frame. The principal constraint is the maximum query and response frame size, as noted in section 4.1.2. Maximum MODBUS query and response frame size.

Query function code	MODBUS query name	Maximum query data request size	Maximum response data size
01	Read Coil Status	32 coils	32 coils
02	Read Input Status	32 inputs	32 inputs
03	Read Holding Registers	127 registers	127 registers
04	Read Input Registers	127 registers	127 registers
06	Preset Single Register	1 register	1 register
07	Read Exception Status	-	8 coils
08	Diagnostics	-	-
11	Fetch Communication Event Counter	-	-
12	Fetch Communication Event Log	-	70 bytes
16	Preset Multiple Registers	127 registers	127 registers

Table 3 - Maximum query and response parameters for supported queries

4.5 Register Mapping

4.5.1 Conventions

4.5.1.1 Memory Pages

The MODBUS specification associates a specific register address space to each query that has a data address field. The address spaces are often called memory pages, because they are analogs to separate memory devices. In fact a simplistic view of the queries in MODBUS is that a specified location in a specified memory device is being read or written. However, it should be borne in mind that the product's implementation of such queries is not as a literal memory access but as a translation to an internal database query (see Note 1).

Note 1	*One consequence of this is that the granularity of the register address space (in the 3x and 4x memory pages) is governed by the size of the data item being requested from the internal database. Since this is often more than the 16-bits of an individual register, not all register addresses are valid. See section 4.14 for more details.*

Each MODBUS memory page has a name and an ID. Table 4 provides a summary of the memory pages, their Ids, and their application in the product.

It is common shorthand practice to prefix a decimal register address with the page ID and, for the most part, this is the style used in this document.

Memory page ID	MODBUS memory page name	Product application
0x	Coil Status	Read and write access of the Output Relays.
1x	Input Status	Read only access of the Opto-Isolated Status Inputs.
3x	Input Registers	Read only data access, e.g. measurements and records.
4x	Holding Registers	Read and write data access, e.g. Product configurations settings and control commands.
6x	Extended Memory File	Not used/supported.

Table 4 - MODBUS "memory" pages reference and application

4.5.1.2 MODBUS Register Identification

The MODBUS convention is to document register identifiers with ordinal values (first, second, third…) whereas the actual protocol uses memory-page based register addresses that begin with address zero. Therefore, the first register in a memory page is register address zero. The second register is register address 1 and so on. In general, one must be subtracted from a registers identifier to find its equivalent address. Note that the page number notation is not part of the address.

Example:

Task:

Obtain the status of the output contacts from the P343 device at address 1.

The output contact status is a 32-bit binary string held in input registers 3x8 and 3x9 (see section 4.8).

Select MODBUS function code 4 “Read input registers” and request two registers starting at input register address 7. Note that the register address is one less than the required register ordinal.

The MODBUS query frame is (the following frame data is shown in hexadecimal 8-bit bytes) (see Note 1):

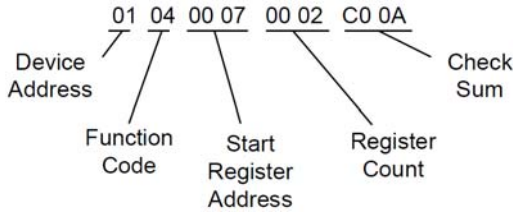

The frame is transmitted from left to right by the master device. Note that the start register address, register count and check sum are all 16-bit numbers that are transmitted in a high byte - low byte order.

The query may elicit the following response (see Note 1):

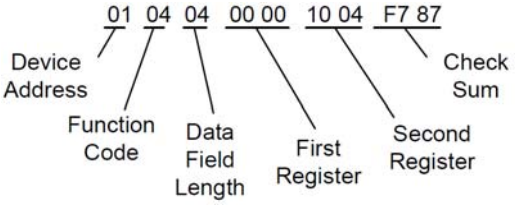

The frame was transmitted from left to right by the slave device. The response frame is valid because 8th bit of the function code field is not set. The data field length is 4 bytes since the query was a read of two 16-bit registers. The data field consists of two pairs of bytes in a high byte - low byte order with the first requested registers data coming first. Thus, the request for the 32-bit output contact status starting at register 3x8 is 00001004h (1000000000100b), which indicates that outputs 3 and 13 are energized and the remaining outputs are de-energized.

Note 1	*The following frame data is shown in hexadecimal 8-bit bytes*

4.6 Register Map

A complete map of the MODBUS addresses supported by the product is presented in the Relay Menu Database, *P341/EN MD*.

The register map tables in this document include an “Equivalent Courier Cell” column. The cell identifiers relate to the product’s internal Courier database and may be used in cross-reference with the Courier Protocol documentation and/or the product’s front panel user interface documentation.

The “Data Format” column specifies the format of the data presented by the associated MODBUS register or registers. Section 4.14 describes the formats used.

The right-hand columns in the tables indicate whether the register is implemented in a particular product model; an asterisk indicates that the model implements the register.

4.7 Measurement Values

Table 1 shows all of the product's available measurements: analog values and counters. Their values are refreshed approximately every second.

Measurement name	Measurement unit	Equivalent courier cell	Start register	End register	Data format	Data size (registers)	P341	P342	P343	P344	P345	P346
IA Magnitude	Amps	0201	3x00200	3x00201	G24	2	*	*				
IA-1 Magnitude	Amps	0201	3x00200	3x00201	G24	2			*	*	*	*
IA Phase Angle	Degrees	0202	3x00202		G30	1	*	*				
IA-1 Phase Angle	Degrees	0202	3x00202		G30	1			*	*	*	*
IB Magnitude	Amps	0203	3x00203	3x00204	G24	2	*	*				
IB-1 Magnitude	Amps	0203	3x00203	3x00204	G24	2			*	*	*	*
IB Phase Angle	Degrees	0204	3x00205		G30	1	*	*				
IB-1 Phase Angle	Degrees	0204	3x00205		G30	1			*	*	*	*
IC Magnitude	Amps	0205	3x00206	3x00207	G24	2	*	*				
IC-1 Magnitude	Amps	0205	3x00206	3x00207	G24	2			*	*	*	*
IC Phase Angle	Degrees	0206	3x00208		G30	1	*	*				
IC-1 Phase Angle	Degrees	0206	3x00208		G30	1			*	*	*	*
IN Measured Mag	Amps	0207	3x00209	3x00210	G24	2		*	*	*	*	*
IN Measured Ang	Degrees	0208	3x00211		G30	1		*	*	*	*	*
IN Derived Mag	Amps	0209	3x00212	3x00213	G24	2	*	*				
IN-1 Derived Mag	Amps	0209	3x00212	3x00213	G24	2			*	*	*	*
IN Derived Angle	Degrees	020A	3x00214		G30	1	*					
Isen Magnitude	Amps	020B	3x00215	3x00216	G24	2	*	*	*	*	*	*
Isen Angle	Degrees	020C	3x00217		G30	1	*	*	*	*	*	*
I1 Magnitude	Amps	020D	3x00218	3x00219	G24	2	*	*	*	*	*	*
I2 Magnitude	Amps	020E	3x00220	3x00221	G24	2	*	*	*	*	*	*
I0 Magnitude	Amps	020F	3x00222	3x00223	G24	2	*	*	*	*	*	*
I1 Phase Angle	Degrees	0241	3x00266		G30	1	*	*	*	*	*	*
I2 Phase Angle	Degrees	0243	3x00267		G30	1	*	*	*	*	*	*
I0 Phase Angle	Degrees	0245	3x00268		G30	1	*	*	*	*	*	*
IA RMS	Amps	0210	3x00224	3x00225	G24	2	*	*	*	*	*	*
IB RMS	Amps	0211	3x00226	3x00227	G24	2	*	*	*	*	*	*
IC RMS	Amps	0212	3x00228	3x00229	G24	2	*	*	*	*	*	*
IN-2 Derived Mag	Amps	0213	3x00273	3x00274	G24	2			*	*	*	*
VAB Magnitude	Volts	0214	3x00230	3x00231	G24	2	*	*	*	*	*	*
VAB Phase Angle	Degrees	0215	3x00232		G30	1	*	*	*	*	*	*
VBC Magnitude	Volts	0216	3x00233	3x00234	G24	2	*	*	*	*	*	*

Measurement name	Measurement unit	Equivalent courier cell	Start register	End register	Data format	Data size (registers)	P341	P342	P343	P344	P345	P346
VBC Phase Angle	Degrees	0217	3x00235		G30	1	*	*	*	*	*	*
VCA Magnitude	Volts	0218	3x00236	3x00237	G24	2	*	*	*	*	*	*
VCA Phase Angle	Degrees	0219	3x00238		G30	1	*	*	*	*	*	*
VAN Magnitude	Volts	021A	3x00239	3x00240	G24	2	*	*	*	*	*	*
VAN Phase Angle	Degrees	021B	3x00241		G30	1	*	*	*	*	*	*
VBN Magnitude	Volts	021C	3x00242	3x00243	G24	2	*	*	*	*	*	*
VBN Phase Angle	Degrees	021D	3x00244		G30	1	*	*	*	*	*	*
VCN Magnitude	Volts	021E	3x00245	3x00246	G24	2	*	*	*	*	*	*
VCN Phase Angle	Degrees	021F	3x00247		G30	1	*	*	*	*	*	*
VN Measured Mag	Volts	0220	3x00248	3x00249	G24	2	*	*	*			*
VN1 Measured Mag	Volts	0220	3x00248	3x00249	G24	2				*	*	
VN Measured Ang	Degrees	0221	3x00250		G30	1	*	*	*			*
VN1 Measured Ang	Degrees	0221	3x00250		G30	1				*	*	
VN2 Measured Mag	Volts	0250	3x00275	3x00276	G24	2				*	*	
VN2 Measured Ang	Degrees	0251	3x00277		G30	1				*	*	
VN Derived Mag	Volts	0222	3x00251	3x00252	G24	2	*	*	*	*	*	*
VN Derived Ang	Degrees	0223	3x00272 see Note		G30	1	*	*	*	*	*	*
			Note *Register 3x00272 was 3x00252 in P340 software revisions 01, 02, 03, 04, 05, 06, & 07. Register 3x00252 overlaps with the register pair beginning at 3x00251. As separate requests, these registers yielded the correct values. However, the overlap prevents a multi-register request that yields the required data. Moreover, the overlap could confuse certain master stations such that the value of assigned to the 3x00252 variable was the value yielded for the 3x00251 register-pair request. This is because it considers the slaves register map to be discrete 16 bit registers akin to a piece of memory and simply works to construct a copy of the slaves register memory.*											
VN Derived Ang	Degrees	0223	3x00272 see Note		G30	1	*	*	*	*	*	*

Measurement name	Measurement unit	Equivalent courier cell	Start register	End register	Data format	Data size (registers)	P341	P342	P343	P344	P345	P346
			Note *Register 3x00272 was 3x00252 in P340 software revisions 01, 02, 03, 04, 05, 06, & 07. Register 3x00252 overlaps with the register pair beginning at 3x00251. As separate requests, these registers yielded the correct values. However, the overlap prevents a multi-register request that yields the required data. Moreover, the overlap could confuse certain master stations such that the value of assigned to the 3x00252 variable was the value yielded for the 3x00251 register-pair request. This is because it considers the slaves register map to be discrete 16 bit registers akin to a piece of memory and simply works to construct a copy of the slaves register memory.*										
C/S Voltage Mag	Volts	0270	3x00281	3x00282	G24	2	*	*	*	*	*	*
C/S Voltage Ang	Degrees	0271	3x00283		G30	1	*	*	*	*	*	*
CS Gen-Bus Mag	Volts	0272	3x00284	3x00285	G24		*	*	*	*	*	*
CS Gen-Bus Angle	Degrees	0273	3x00286		G30	1	*	*	*	*	*	*
Slip Frequency	Hertz	0274	3x00287		G30	1	*	*	*	*	*	*
CS Frequency	Hertz	0275	3x00288		G30	1	*	*	*	*	*	*
V1 Magnitude	Volts	0224	3x00253	3x00254	G24	2	*	*	*	*	*	*
V2 Magnitude	Volts	0225	3x00255	3x00256	G24	2	*	*	*	*	*	*
V0 Magnitude	Volts	0226	3x00257	3x00258	G24	2	*	*	*	*	*	*
V1 Phase Angle	Degrees	0247	3x00269		G30	1	*	*	*	*	*	*
V2 Phase Angle	Degrees	0249	3x00270		G30	1	*	*	*	*	*	*
V0 Phase Angle	Degrees	024B	3x00271		G30	1	*	*	*	*	*	*
VAN RMS	Volts	0227	3x00259	3x00260	G24	2	*	*	*	*	*	*
VBN RMS	Volts	0228	3x00261	3x00262	G24	2	*	*	*	*	*	*
VCN RMS	Volts	0229	3x00263	3x00264	G24	2	*	*	*	*	*	*
Frequency	Hertz	022D	3x00265		G30	1	*	*	*	*	*	*
A Phase Watts	Watts	0301	3x00391	3x00392	G125	2	*	*	*	*	*	*
A Phase Watts	Watts	0301	3x00300	3x00302	G29	3	*	*	*	*	*	*
B Phase Watts	Watts	0302	3x00393	3x00394	G125	2	*	*	*	*	*	*
B Phase Watts	Watts	0302	3x00303	3x00305	G29	3	*	*	*	*	*	*
C Phase Watts	Watts	0303	3x00395	3x00396	G125	2	*	*	*	*	*	*
C Phase Watts	Watts	0303	3x00306	3x00308	G29	3	*	*	*	*	*	*
A Phase VArs	VAr	0304	3x00397	3x00398	G125	2	*	*	*	*	*	*
A Phase VArs	VAr	0304	3x00309	3x00311	G29	3	*	*	*	*	*	*
B Phase VArs	VAr	0305	3x00399	3x00400	G125	2	*	*	*	*	*	*
B Phase VArs	VAr	0305	3x00312	3x00314	G29	3	*	*	*	*	*	*
C Phase VArs	VAr	0306	3x00401	3x00402	G125	2	*	*	*	*	*	*
C Phase VArs	VAr	0306	3x00315	3x00317	G29	3	*	*	*	*	*	*
A Phase VA	VA	0307	3x00403	3x00404	G125	2	*	*	*	*	*	*
A Phase VA	VA	0307	3x00318	3x00320	G29	3	*	*	*	*	*	*
B Phase VA	VA	0308	3x00405	3x00406	G125	2	*	*	*	*	*	*

Measurement name	Measurement unit	Equivalent courier cell	Start register	End register	Data format	Data size (registers)	P341	P342	P343	P344	P345	P346
B Phase VA	VA	0308	3x00321	3x00323	G29	3	*	*	*	*	*	*
C Phase VA	VA	0309	3x00407	3x00408	G125	2	*	*	*	*	*	*
C Phase VA	VA	0309	3x00324	3x00326	G29	3	*	*	*	*	*	*
3 Phase Watts	Watts	030A	3x00409	3x00410	G125	2	*	*	*	*	*	*
3 Phase Watts	Watts	030A	3x00327	3x00329	G29	3	*	*	*	*	*	*
3 Phase VArs	VAr	030B	3x00411	3x00412	G125	2	*	*	*	*	*	*
3 Phase VArs	VAr	030B	3x00330	3x00332	G29	3	*	*	*	*	*	*
3 Phase VA	VA	030C	3x00413	3x00414	G125	2	*	*	*	*	*	*
3 Phase VA	VA	030C	3x00333	3x00335	G29	3	*	*	*	*	*	*
NPS Power S2	VA	030D	3x00336	3x00338	G29	3		*	*	*	*	*
NPS Power S2	VA	030D	3x00500	3x00501	G125	2		*	*	*	*	*
APh Sensitive Watts	Watts	0420	3x00476	3x00477	G125	2	*	*	*	*	*	*
APh Sensitive VArs	VAr	0421	3x00478	3x00479	G125	2	*	*	*	*	*	*
APh Sensitive Power Angle	Degrees	0422	3x00480		G30	1	*	*	*	*	*	*
3Ph Power Factor	-	030E	3x00339		G30	1	*	*	*	*	*	*
APh Power Factor	-	030F	3x00340		G30	1	*	*	*	*	*	*
BPh Power Factor	-	0310	3x00341		G30	1	*	*	*	*	*	*
CPh Power Factor	-	0311	3x00342		G30	1	*	*	*	*	*	*
3 Phase WHours Fwd	Wh	0312	3x00415	3x00416	G125	2	*	*	*	*	*	*
3 Phase WHours Fwd	Wh	0312	3x00343	3x00345	G29	3	*	*	*	*	*	*
3 Phase WHours Rev	Wh	0313	3x00417	3x00418	G125	2	*	*	*	*	*	*
3 Phase WHours Rev	Wh	0313	3x00346	3x00348	G29	3	*	*	*	*	*	*
3 Phase VArHours Fwd	VArh	0314	3x00419	3x00420	G125	2	*	*	*	*	*	*
3 Phase VArHours Fwd	VArh	0314	3x00349	3x00351	G29	3	*	*	*	*	*	*
3 Phase VArHours Rev	VArh	0315	3x00421	3x00422	G125	2	*	*	*	*	*	*
3 Phase VArHours Rev	VArh	0315	3x00352	3x00354	G29	3	*	*	*	*	*	*
3 Phase W Fix Demand	Watts	0316	3x00423	3x00424	G125	2	*	*	*	*	*	*
3 Phase W Fix Demand	Watts	0316	3x00355	3x00357	G29	3	*	*	*	*	*	*
3 Phase VArs Fix Demand	VAr	0317	3x00425	3x00426	G125	2	*	*	*	*	*	*
3 Phase VArs Fix Demand	VAr	0317	3x00358	3x00360	G29	3	*	*	*	*	*	*

Measurement name	Measurement unit	Equivalent courier cell	Start register	End register	Data format	Data size (registers)	P341	P342	P343	P344	P345	P346
IA Fixed Demand	Amps	0318	3x00361	3x00362	G24	2	*	*	*	*	*	*
IB Fixed Demand	Amps	0319	3x00363	3x00364	G24	2	*	*	*	*	*	*
IC Fixed Demand	Amps	031A	3x00365	3x00366	G24	2	*	*	*	*	*	*
3 Phase W Roll Demand	Watts	031B	3x00427	3x00428	G125	2	*	*	*	*	*	*
3 Phase W Roll Demand	Watts	031B	3x00367	3x00369	G29	3	*	*	*	*	*	*
3 Phase VArs Roll Demand	VAr	031C	3x00429	3x00430	G125	2	*	*	*	*	*	*
3 Phase VArs Roll Demand	VAr	031C	3x00370	3x00372	G29	3	*	*	*	*	*	*
IA Roll Demand	Amps	031D	3x00373	3x00374	G24	2	*	*	*	*	*	*
IB Roll Demand	Amps	031E	3x00375	3x00376	G24	2	*	*	*	*	*	*
IC Roll Demand	Amps	031F	3x00377	3x00378	G24	2	*	*	*	*	*	*
3 Phase W Peak Demand	Watts	0320	3x00431	3x00432	G125	2	*	*	*	*	*	*
3Ph W Peak Dem	Watts	0320	3x00379	3x00381	G29	3	*	*	*	*	*	*
3 Phase VArs Peak Demand	VAr	0321	3x00433	3x00434	G125	2	*	*	*	*	*	*
3 Phase VArs Peak Demand	VAr	0321	3x00382	3x00384	G29	3	*	*	*	*	*	*
IA Peak Demand	Amps	0322	3x00385	3x00386	G24	2	*	*	*	*	*	*
IB Peak Demand	Amps	0323	3x00387	3x00388	G24	2	*	*	*	*	*	*
IC Peak Demand	Amps	0324	3x00389	3x00390	G24	2	*	*	*	*	*	*
CT2 NPS Power S2	Watts	0326	3x00596	3x00597	G125	2			*	*	*	*
CT2 NPS Power S2	Watts	0326	3x00593	3x00595	G29	3			*	*	*	*
IA-2 Magnitude	Amps	0401	3x00435	3x00436	G24	2			*	*	*	*
IA-2 Phase Angle	Degrees	0402	3x00437		G30	1			*	*	*	*
IB-2 Magnitude	Amps	0403	3x00438	3x00439	G24	2			*	*	*	*
IB-2 Phase Angle	Degrees	0404	3x00440		G30	1			*	*	*	*
IC-2 Magnitude	Amps	0405	3x00441	3x00442	G24	2			*	*	*	*
IC-2 Phase Angle	Degrees	0406	3x00443		G30	1			*	*	*	*
IA Differential	Amps	0407	3x00444	3x00445	G24	2			*	*	*	*
IB Differential	Amps	0408	3x00446	3x00447	G24	2			*	*	*	*
IC Differential	Amps	0409	3x00448	3x00449	G24	2			*	*	*	*
IA Bias	Amps	040A	3x00450	3x00451	G24	2			*	*	*	*
IB Bias	Amps	040B	3x00452	3x00453	G24	2			*	*	*	*
IC Bias	Amps	040C	3x00454	3x00455	G24	2			*	*	*	*
IREF Diff	Amps	040D	3x00456	3x00457	G24	2		*	*	*	*	*

Measurement name	Measurement unit	Equivalent courier cell	Start register	End register	Data format	Data size (registers)	P341	P342	P343	P344	P345	P346
IREF Bias	Amps	040E	3x00458	3x00459	G24	2		*	*	*	*	*
VN 3rd Harmonic	Volts	040F	3x00460	3x00461	G24	2			*	*	*	
NPS Thermal	Percentage	0410	3x00462		G1	1		*	*	*	*	*
RTD 1	Celsius	0412	3x00463		G10	1		*	*	*	*	*
RTD 2	Celsius	0413	3x00464		G10	1		*	*	*	*	*
RTD 3	Celsius	0414	3x00465		G10	1		*	*	*	*	*
RTD 4	Celsius	0415	3x00466		G10	1		*	*	*	*	*
RTD 5	Celsius	0416	3x00467		G10	1		*	*	*	*	*
RTD 6	Celsius	0417	3x00468		G10	1		*	*	*	*	*
RTD 7	Celsius	0418	3x00469		G10	1		*	*	*	*	*
RTD 8	Celsius	0419	3x00470		G10	1		*	*	*	*	*
RTD 9	Celsius	041A	3x00471		G10	1		*	*	*	*	*
RTD 10	Celsius	041B	3x00472		G10	1		*	*	*	*	*
RTD Open Circuit	-	041C	3x00473		G108	1		*	*	*	*	*
RTD Short Circuit	-	041D	3x00474		G109	1		*	*	*	*	*
RTD Data Error	-	041E	3x00475		G110	1		*	*	*	*	*
Thermal Overload	Percentage	0423	3x00481		G1	1	*	*	*	*	*	*
CLIO Input 1	-	0425	3x00482	3x00483	G125	2	*	*	*	*	*	*
CLIO Input 2	-	0426	3x00484	3x00485	G125	2	*	*	*	*	*	*
CLIO Input 3	-	0427	3x00486	3x00487	G125	2	*	*	*	*	*	*
CLIO Input 4	-	0428	3x00488	3x00489	G125	2	*	*	*	*	*	*
CB Operations	-	0601	3x00600		G1	1	*	*	*	*	*	*
Total IA Broken	Amps	0602	3x00601	3x00602	G24	2	*	*	*	*	*	*
Total IB Broken	Amps	0603	3x00603	3x00604	G24	2	*	*	*	*	*	*
Total IC Broken	Amps	0604	3x00605	3x00606	G24	2	*	*	*	*	*	*
CB Operate Time	Seconds	0605	3x00607		G25	1	*	*	*	*	*	*
Freq Band 1 Time (s)	Seconds	0430	3x00502	3x00503	G27	2		*	*	*	*	*
Freq Band 2 Time (s)	Seconds	0434	3x00504	3x00505	G27	2		*	*	*	*	*
Freq Band 3 Time (s)	Seconds	0438	3x00506	3x00507	G27	2		*	*	*	*	*
Freq Band 4 Time (s)	Seconds	043C	3x00508	3x00509	G27	2		*	*	*	*	*
Freq Band 5 Time (s)	Seconds	0440	3x00510	3x00511	G27	2		*	*	*	*	*
Freq Band 6 Time (s)	Seconds	0444	3x00512	3x00513	G27	2		*	*	*	*	*
df/dt	Hertz/S	0448	3x00525	3x00526	G125	2	*	*	*	*	*	*
Volts Per Hertz	V/Hz	0450	3x00514	3x00515	G24	2		*	*	*	*	*
64S V Magnitude	Volts	0452	0x00516	0x00517	G24	2					*	
64S I Magnitude	Amps	0454	0x00518	0x00519	G24	2					*	

Measurement name	Measurement unit	Equivalent courier cell	Start register	End register	Data format	Data size (registers)	P341	P342	P343	P344	P345	P346
64S I Angle	Degrees	0455	0x00520		G30	1					*	
64S R secondary	Ohms	0457	0x00521	0x00522	G125	2					*	
64S R primary	Ohms	0458	0x00523	0x00524	G125	2					*	
64R CL Input	Amps	0471	0x00539	0x00540	G125	2		*	*	*	*	*
64R R Fault	Ohms	0472	0x00541	0x00552	G125	2		*	*	*	*	*
IA Diff PU	Amps	0491	3x11300	3x11301	G24	2			*	*	*	*
IB Diff PU	Amps	0492	3x11302	3x11303	G24	2			*	*	*	*
IC Diff PU	Amps	0493	3x11304	3x11305	G24	2			*	*	*	*
IA Bias PU	Amps	0494	3x11306	3x11307	G24	2			*	*	*	*
IB Bias PU	Amps	0495	3x11308	3x11309	G24	2			*	*	*	*
IC Bias PU	Amps	0496	3x11310	3x11311	G24	2			*	*	*	*
IA Diff 2H	Amps	0497	3x11312	3x11313	G24	2			*	*	*	*
IB Diff 2H	Amps	0498	3x11314	3x11315	G24	2			*	*	*	*
IC Diff 2H	Amps	0499	3x11316	3x11317	G24	2			*	*	*	*
IA Diff 5H	Amps	049A	3x11318	3x11319	G24	2			*	*	*	*
IB Diff 5H	Amps	049B	3x11320	3x11321	G24	2			*	*	*	*
IC Diff 5H	Amps	049C	3x11322	3x11323	G24	2			*	*	*	*
CT2 I1 Mag	Amps	049D	3x11324	3x11325	G24	2			*	*	*	*
CT2 I1 Angle	Degrees	049E	3x11351		G30	1			*	*	*	*
CT2 I2 Mag	Amps	049F	3x11326	3x11327	G24	2			*	*	*	*
CT2 I2 Angle	Degrees	04A0	3x11352		G30	1			*	*	*	*
CT2 I0 Mag	Amps	04A1	3x11328	3x11329	G24	2			*	*	*	*
CT2 I0 Angle	Degrees	04A2	3x11353		G30	1			*	*	*	*
CT1 I2/I1	-	04A3	3x11330	3x11331	G24	2			*	*	*	*
CT2 I2/I1	-	04A4	3x11332	3x11333	G24	2			*	*	*	*
Hot Spot T	Celsius	0501	3x11334		G10	1		*	*	*	*	*
Top Oil T	Celsius	0502	3x11335		G10	1		*	*	*	*	*
Ambient T	Celsius	0504	3x11336		G10	1		*	*	*	*	*
TOL Pretrip left	Seconds	0505	3x11337	3x11338	G24	2		*	*	*	*	*
LOL status	-	0506	3x11339	3x11340	G24	2		*	*	*	*	*
Rate of LOL	-	0508	3x11341	3x11342	G24	2		*	*	*	*	*
LOL Ageing Fact	-	0509	3x11343	3x11344	G24	2		*	*	*	*	*
Lres at Design T	-	050A	3x11345	3x11346	G24	2		*	*	*	*	*
FAA,m	-	050B	3x11347	3x11348	G24	2		*	*	*	*	*
Lres at FAA,m	-	050C	3x11349	3x11350	G24	2		*	*	*	*	*

Table 5 - Measurement data available in the P340 product range

4.8 Binary Status Information

Binary status information is available for the product's optically-isolated status inputs ("optos"), relay contact outputs, alarm flags, control inputs, internal digital data bus ("DDB"), and the front panel 25-pin test port (see Note).

Note	*The test port allows the product to be configured to map up to eight of its digital data bus (DDB - see Relay Menu Database, P341/EN MD) signals to eight output pins. The usual application is to control test equipment. However, since the test port output status is available on the MODBUS interface, it could be used to efficiently collect up to eight DDB signals.*

The product's internal digital data bus consists of 2047 binary-status flags. The allocation of the points in the DDB are largely product and version specific. See the Relay Menu Database, *P341/EN MD*, for a definition of the product's DDB.

The relay-contact status information is available from the 0x "Coil Status" MODBUS page and from the 3x "Input Register" MODBUS page. For legacy reasons the information is duplicated in the 3x page with explicit registers (8 & 9) and in the DDB status register area (11023 & 11024).

The current state of the optically isolated status inputs is available from the 1x "Input Status" MODBUS page and from the 3x "Input Register" MODBUS page. The principal 3x registers are part of the DDB status register area (11025 & 11026). For legacy reasons, a single register at 3x00007 provides the status of the first 16 inputs.

The 0x "Coil Status" and 1x "Input Status" pages allow individual or blocks of binary status flags to be read. The resultant data is left aligned and transmitted in a big-endian (high order to low order) format in the response frame. Relay contact 1 is mapped to coil 1, contact 2 to coil 2 and so on. Similarly, opto-input 1 is mapped to input 1, opto-input 2 to input 2 and so on.

Table 6 shows the available 3x and 4x binary status information.

Name	Equivalent courier cell	Start register	End register	Data format	Data size (registers)	P341	P342	P343	P344	P345	P346
Product Status	-	3x00001		G26	1	*	*	*	*	*	*
Opto I/P Status	0030	3x11025	3x11026	G8	2	*	*	*	*	*	*
Relay O/P Status	0040	3x00008	3x00009	G9	2	*	*	*	*	*	*
Alarm Status 1	0050	3x00011	3x00012	G96	2	*	*	*	*	*	*
Alarm Status 2	0051	3x00013	3x00014	G128	2	*	*	*	*	*	*
Alarm Status 3	0052	3x00015	3x00016	G228	2	*	*	*	*	*	*
Ctrl I/P Status	1201	4x00950	4x00951	G202	2	*	*	*	*	*	*
Relay Test Port Status	0F03	3x11022		G1	1	*	*	*	*	*	*
DDB 31 - 0	0F20	3x11023	3x11024	G27	2	*	*	*	*	*	*
DDB 63 - 32	0F21	3x11025	3x11026	G27	2	*	*	*	*	*	*
DDB 95 - 64	0F22	3x11027	3x11028	G27	2	*	*	*	*	*	*
DDB 127 - 96	0F23	3x11029	3x11030	G27	2	*	*	*	*	*	*
DDB 159 - 128	0F24	3x11031	3x11032	G27	2	*	*	*	*	*	*
DDB 191 - 160	0F25	3x11033	3x11034	G27	2	*	*	*	*	*	*
DDB 223 - 192	0F26	3x11035	3x11036	G27	2	*	*	*	*	*	*
DDB 255 - 224	0F27	3x11037	3x11038	G27	2	*	*	*	*	*	*
DDB 287 - 256	0F28	3x11039	3x11040	G27	2	*	*	*	*	*	*
DDB 319 - 288	0F29	3x11041	3x11042	G27	2	*	*	*	*	*	*

Name	Equivalent courier cell	Start register	End register	Data format	Data size (registers)	P341	P342	P343	P344	P345	P346
DDB 351 - 320	0F2A	3x11043	3x11044	G27	2	*	*	*	*	*	*
DDB 383 - 352	0F2B	3x11045	3x11046	G27	2	*	*	*	*	*	*
DDB 415 - 384	0F2C	3x11047	3x11048	G27	2	*	*	*	*	*	*
DDB 447 - 416	0F2D	3x11049	3x11050	G27	2	*	*	*	*	*	*
DDB 479 - 448	0F2E	3x11051	3x11052	G27	2	*	*	*	*	*	*
DDB 511 - 480	0F2F	3x11053	3x11054	G27	2	*	*	*	*	*	*
DDB 543 - 512	0F30	3x11055	3x11056	G27	2	*	*	*	*	*	*
DDB 575 - 544	0F31	3x11057	3x11058	G27	2	*	*	*	*	*	*
DDB 607 - 576	0F32	3x11059	3x11060	G27	2	*	*	*	*	*	*
DDB 639 - 608	0F33	3x11061	3x11062	G27	2	*	*	*	*	*	*
DDB 671 - 640	0F34	3x11063	3x11064	G27	2	*	*	*	*	*	*
DDB 703 - 672	0F35	3x11065	3x11066	G27	2	*	*	*	*	*	*
DDB 735 - 704	0F36	3x11067	3x11068	G27	2	*	*	*	*	*	*
DDB 767 - 736	0F37	3x11069	3x11070	G27	2	*	*	*	*	*	*
DDB 799 - 768	0F38	3x11071	3x11072	G27	2	*	*	*	*	*	*
DDB 831 - 800	0F39	3x11073	3x11074	G27	2	*	*	*	*	*	*
DDB 863 - 832	0F3A	3x11075	3x11076	G27	2	*	*	*	*	*	*
DDB 895 - 864	0F3B	3x11077	3x11078	G27	2	*	*	*	*	*	*
DDB 927 - 896	0F3C	3x11079	3x11080	G27	2	*	*	*	*	*	*
DDB 959 - 928	0F3D	3x11081	3x11082	G27	2	*	*	*	*	*	*
DDB 991 - 960	0F3E	3x11083	3x11084	G27	2	*	*	*	*	*	*
DDB 1023 - 992	0F3F	3x11085	3x11086	G27	2	*	*	*	*	*	*
DDB 1055-1024	0F40	3x11087	3x11088	G27	2	*	*	*	*	*	*
DDB 1087-1056	0F41	3x11089	3x11090	G27	2	*	*	*	*	*	*
DDB 1119-1088	0F42	3x11091	3x11092	G27	2	*	*	*	*	*	*
DDB 1151-1120	0F43	3x11093	3x11094	G27	2	*	*	*	*	*	*
DDB 1183-1152	0F44	3x11095	3x11096	G27	2	*	*	*	*	*	*
DDB 1215-1184	0F45	3x11097	3x11098	G27	2	*	*	*	*	*	*
DDB 1247-1216	0F46	3x11099	3x11100	G27	2	*	*	*	*	*	*
DDB 1279-1248	0F47	3x11101	3x11102	G27	2	*	*	*	*	*	*
DDB 1311-1280	0F48	3x11103	3x11104	G27	2	*	*	*	*	*	*
DDB 1343-1312	0F49	3x11105	3x11106	G27	2	*	*	*	*	*	*
DDB 1375-1344	0F4A	3x11107	3x11108	G27	2	*	*	*	*	*	*
DDB 1407-1376	0F4B	3x11109	3x11110	G27	2	*	*	*	*	*	*
DDB 1439-1408	0F4C	3x11111	3x11112	G27	2	*	*	*	*	*	*
DDB 1471-1440	0F4D	3x11113	3x11114	G27	2	*	*	*	*	*	*
DDB 1503-1472	0F4E	3x11115	3x11116	G27	2	*	*	*	*	*	*
DDB 1535-1504	0F4F	3x11117	3x11118	G27	2	*	*	*	*	*	*
DDB 1567-1536	0F50	3x11119	3x11120	G27	2	*	*	*	*	*	*
DDB 1599-1568	0F51	3x11121	3x11122	G27	2	*	*	*	*	*	*
DDB 1631-1600	0F52	3x11123	3x11124	G27	2	*	*	*	*	*	*
DDB 1663-1632	0F53	3x11125	3x11126	G27	2	*	*	*	*	*	*
DDB 1695-1664	0F54	3x11127	3x11128	G27	2	*	*	*	*	*	*

Name	Equivalent courier cell	Start register	End register	Data format	Data size (registers)	P341	P342	P343	P344	P345	P346
DDB 1727-1696	0F55	3x11129	3x11130	G27	2	*	*	*	*	*	*
DDB 1759-1728	0F56	3x11131	3x11132	G27	2	*	*	*	*	*	*
DDB 1791-1760	0F57	3x11133	3x11134	G27	2	*	*	*	*	*	*
DDB 1823-1792	0F58	3x11135	3x11136	G27	2	*	*	*	*	*	*
DDB 1855-1824	0F59	3x11137	3x11138	G27	2	*	*	*	*	*	*
DDB 1887-1856	0F5A	3x11139	3x11140	G27	2	*	*	*	*	*	*
DDB 1919-1888	0F5B	3x11141	3x11142	G27	2	*	*	*	*	*	*
DDB 1951-1920	0F5C	3x11143	3x11144	G27	2	*	*	*	*	*	*
DDB 1983-1952	0F5D	3x11145	3x11146	G27	2	*	*	*	*	*	*
DDB 2015-1984	0F5E	3x11147	3x11148	G27	2	*	*	*	*	*	*
DDB 2047-2016	0F5F	3x11149	3x11150	G27	2	*	*	*	*	*	*

Table 6 - Binary status information available in the P340 product range

4.9 Measurement and Binary Status 3x Register Sets

The data available from the 3x input registers is arranged into register sets. A register set is a fixed collection of values in a contiguous block of register addresses. The advantage of this is that multiple values may be read with a single MODBUS query, function code 4 “Read Input Registers”, up to the maximum data limits of the query (see section 4.4).

The definition of a register-set is specified by the selection of a start and end address, which can span multiple contiguous values in the 3x Register, see Relay Menu Database, *P341/EN MD*. The only rule being that a register set must not result in an attempt to read only part of a multi-register data type (see section 4.14). It is permissible for a register set to span unused register locations, in which case a value of zero is returned for each such register location.

Some examples of useful register sets are:

- 3x701 to 3x786 provide a selection of measurement and binary-status values. Some of these registers are duplicates of other register values
- 3x723 to 3x786 provide the DDB status
- 3x391 to 3x408 provide the per phase power measurements in floating point format
- 3x409 to 3x414 provide the three-phase power measurements in floating point format
- 3x184 to 3x193 provide the ten RTD measurement values (P342/3/4/5/6 only)

There are many other possibilities depending on your application and an appraisal of the 3x Register Map in the Relay Menu Database document, *P341/EN MD*. The capabilities of the MODBUS master device, performance targets, and communications latencies may also influence the degree to which multiple values are read as register sets, as opposed to individually.

4.10 Controls

Table 7 shows MODBUS 4x “Holding Registers” that allow the external system to control aspects of the product’s behavior, configuration, records, or items of plant connected to the product such as circuit breakers.

The column **Command or setting** indicates whether the control is a self-resetting “Command” or a state based “Setting”.

“Command” controls will automatically return to their default value when the control action has been completed. For example, writing the “trip” value to the “CB Trip/Close” control will result in the controlled circuit breaker opening (if CB remote control is enabled, the CB has a valid state, and it was closed). The value of the “CB Trip/Close” register will automatically return to “no operation”. This may lead to problems with masters that attempt to verify write requests by reading back the written value.

“Setting” controls maintain the written value, assuming that it was accepted. For example the **Active Setting** register reports the current active group on reads. The Active Setting Group register also accepts writes with a valid setting group number to change the active group to the one specified. This assumes that the setting group selection by optically isolated status inputs has not been enabled and that the specified group is enabled.

Entries without a defined setting range, as per the “min.”, “max.” and “step” columns, are binary-string values whose pattern is defined by its stated data type.

Name	Equivalent courier cell	Start register	End register	Data format	Data size (registers)	Default value	Command or setting	Min	Max	Step	Password level	P341	P342	P343	P344	P345	P346
Active Setting Group	0903	4x00404		G90	1	1	Setting	0	3	1	1	*	*	*	*	*	*
CB Trip/Close	0010	4x00021		G55	1	No Operation	Command	0	2	1	1	*	*	*	*	*	*
Reset NPS Thermal	0411	4x00104		G11	1	No	Command	0	1	1	1		*	*	*	*	*
Reset RTD Flags	041F	4x00105		G11	1	No	Command	0	1	1	1		*	*	*	*	*
Reset Thermal O/L	0424	4x00106		G11	1	No	Command	0	1	1	1	*	*	*	*	*	*
Reset Demand	0325	4x00103		G11	1	No	Command	0	1	1	1	*	*	*	*	*	*
Record Control	-	4x00401		G6	1	0	Setting					*	*	*	*	*	*
Test Mode	0F0D	4x00858		G119	1	Disabled	Setting	0	2	1	2	*	*	*	*	*	*
Test LEDs	0F10	4x00862		G94	1	No Operation	Command	0	1	1	2	*	*	*	*	*	*
Lockout Reset	0708	4x00206		G11	1	No	Command	0	1	1	2	*	*	*	*	*	*
Reset CB Data	0606	4x00150		G11	1	No	Command	0	1	1	1	*	*	*	*	*	*
Ctrl I/P Status	1201	4x00950	4x00951	G202	2	0	Setting				2	*	*	*	*	*	*
Control Input 1	1202	4x00952		G203	1	No Operation	Command	0	2	1	2	*	*	*	*	*	*
Control Input 2	1203	4x00953		G203	1	No Operation	Command	0	2	1	2	*	*	*	*	*	*

Entries without a defined setting range, as per the “min.”, “max.” and “step” columns, are binary-string values whose pattern is defined by its stated data type.																	
Name	Equivalent courier cell	Start register	End register	Data format	Data size (registers)	Default value	Command or setting	Min	Max	Step	Password level	P341	P342	P343	P344	P345	P346
Control Input 3	1204	4x00954		G203	1	No Operation	Command	0	2	1	2	*	*	*	*	*	*
Control Input 4	1205	4x00955		G203	1	No Operation	Command	0	2	1	2	*	*	*	*	*	*
Control Input 5	1206	4x00956		G203	1	No Operation	Command	0	2	1	2	*	*	*	*	*	*
Control Input 6	1207	4x00957		G203	1	No Operation	Command	0	2	1	2	*	*	*	*	*	*
Control Input 7	1208	4x00958		G203	1	No Operation	Command	0	2	1	2	*	*	*	*	*	*
Control Input 8	1209	4x00959		G203	1	No Operation	Command	0	2	1	2	*	*	*	*	*	*
Control Input 9	120A	4x00960		G203	1	No Operation	Command	0	2	1	2	*	*	*	*	*	*
Control Input 10	120B	4x00961		G203	1	No Operation	Command	0	2	1	2	*	*	*	*	*	*
Control Input 11	120C	4x00962		G203	1	No Operation	Command	0	2	1	2	*	*	*	*	*	*
Control Input 12	120D	4x00963		G203	1	No Operation	Command	0	2	1	2	*	*	*	*	*	*
Control Input 13	120E	4x00964		G203	1	No Operation	Command	0	2	1	2	*	*	*	*	*	*
Control Input 14	120F	4x00965		G203	1	No Operation	Command	0	2	1	2	*	*	*	*	*	*
Control Input 15	1210	4x00966		G203	1	No Operation	Command	0	2	1	2	*	*	*	*	*	*
Control Input 16	1211	4x00967		G203	1	No Operation	Command	0	2	1	2	*	*	*	*	*	*
Control Input 17	1212	4x00968		G203	1	No Operation	Command	0	2	1	2	*	*	*	*	*	*
Control Input 18	1213	4x00969		G203	1	No Operation	Command	0	2	1	2	*	*	*	*	*	*
Control Input 19	1214	4x00970		G203	1	No Operation	Command	0	2	1	2	*	*	*	*	*	*
Control Input 20	1215	4x00971		G203	1	No Operation	Command	0	2	1	2	*	*	*	*	*	*
Control Input 21	1216	4x00972		G203	1	No Operation	Command	0	2	1	2	*	*	*	*	*	*
Control Input 22	1217	4x00973		G203	1	No Operation	Command	0	2	1	2	*	*	*	*	*	*
Control Input 23	1218	4x00974		G203	1	No Operation	Command	0	2	1	2	*	*	*	*	*	*
Control Input 24	1219	4x00975		G203	1	No Operation	Command	0	2	1	2	*	*	*	*	*	*
Control Input 25	121A	4x00976		G203	1	No Operation	Command	0	2	1	2	*	*	*	*	*	*
Control Input 26	121B	4x00977		G203	1	No Operation	Command	0	2	1	2	*	*	*	*	*	*

Entries without a defined setting range, as per the “min.”, “max.” and “step” columns, are binary-string values whose pattern is defined by its stated data type.																	
Name	Equivalent courier cell	Start register	End register	Data format	Data size (registers)	Default value	Command or setting	Min	Max	Step	Password level	P341	P342	P343	P344	P345	P346
Control Input 27	121C	4x00978		G203	1	No Operation	Command	0	2	1	2	*	*	*	*	*	*
Control Input 28	121D	4x00979		G203	1	No Operation	Command	0	2	1	2	*	*	*	*	*	*
Control Input 29	121E	4x00980		G203	1	No Operation	Command	0	2	1	2	*	*	*	*	*	*
Control Input 30	121F	4x00981		G203	1	No Operation	Command	0	2	1	2	*	*	*	*	*	*
Control Input 31	1220	4x00982		G203	1	No Operation	Command	0	2	1	2	*	*	*	*	*	*
Control Input 32	1221	4x00983		G203	1	No Operation	Command	0	2	1	2	*	*	*	*	*	*
Reset Freq Band 1	0432	4x00107		G11	1	No	Command	0	1	1	1		*	*	*	*	*
Reset Freq Band 2	0436	4x00108		G11	1	No	Command	0	1	1	1		*	*	*	*	*
Reset Freq Band 3	043A	4x00109		G11	1	No	Command	0	1	1	1		*	*	*	*	*
Reset Freq Band 4	043E	4x00110		G11	1	No	Command	0	1	1	1		*	*	*	*	*
Reset Freq Band 5	0442	4x00111		G11	1	No	Command	0	1	1	1		*	*	*	*	*
Reset Freq Band 6	0446	4x00112		G11	1	No	Command	0	1	1	1		*	*	*	*	*
Reset Xthermal	0503	4x00113		G11	1	No	Command	0	1	1	1		*	*	*	*	*
Reset LOL	0507	4x00114		G11	1	No	Command	0	1	1	1		*	*	*	*	*

Table 7 - Control (commands) available in the P340 product range

4.11 Event Extraction

The product is capable of storing 512 event records in battery backed memory. An event record consists of a time stamp, a record type, and a set of information fields. The record type and the information fields record the event that occurred at the time captured by the time stamp.

The product has several classes of event record:

- Alarm events
- Opto-isolated status input events
- Relay contact output events
- Protection/DDB operation events
- Fault data capture events
- General events

The Relay Menu Database, *P341/EN MD* specifies the available events. Note that the product provides an “event filtering” feature that may be used to prevent specific events from being logged. The event filter is configured in the “Record Control” section of the product’s Relay Menu Database in the S1 Studio configuration tool.

The product supports two methods of event extraction providing either automatic or manual extraction of the stored event, fault, and maintenance records.

It is important to appreciate that the product stores event, fault, and maintenance records in three separate queues. As entries are added to the fault and maintenance queues a corresponding event is added to the event queue. Each queue is of different length and each queue may be individually cleared (see section 4.11.4). It is therefore possible to have a fault event or a maintenance event entry in the event queue with no corresponding entry in the associated queue because it has been overwritten or deleted.

The manual extraction procedure (section 4.11.1) allows each of these three queues to be read independently.

The automatic extraction procedure (section 4.11.2) reads records from the event queue. If the event record is either a fault or a maintenance record then the records extended data is read too, if it is available from their queues.

Note	*Version 31 of the product introduced a new set of 3x registers for the presentation of the event and fault record data. These registers are used throughout the text of the following sub-sections. For legacy compatibility, the original registers are still provided. These are described as previous MODBUS address in the Relay Menu Database, P341/EN MD. They should not be used for new installations. See section 4.11.5 for additional information.*

4.11.1 Manual Extraction Procedure

There are three registers available to manually select stored records, there are also three read only registers allowing the number of stored records to be determined.

4x00100 - Select Event, 0 to 511 (note - this was 249 in P340 software revisions 01, 02, 03, 04, 05, 06, & 07, since they only stored 250 event records)

4x00101 - Select Fault, 0 to 4

4x00102 - Select Maintenance Record, 0 to 4

For each of the above registers, a value of zero represents the most recent stored record. The following registers can be read to indicate the numbers of the various types of record stored.

The values in the following registers indicate the number of each type of record stored.

3x10000 - Number of stored event records

3x10001 - Number of stored fault records

3x10002 - Number of stored maintenance records

Each fault or maintenance record logged causes an event record to be created by the product. If this event record is selected the additional registers showing the fault or maintenance record details will also become populated.

4.11.2 Automatic Extraction Procedure

Automatic event-record extraction allows records to be extracted as they occur. Event records are extracted in sequential order, including any fault or maintenance data that may be associated with an event.

The MODBUS master can determine whether the product has any events stored that have not yet been extracted. This is performed by reading the product's status register 3x00001 (G26 data type). If the event bit, of this register, is set then the product contains event records that have not yet been extracted.

To select the next event for sequential extraction, the master station writes a value of one to the record selection register 4x00400 (G18 data type). The event data together with any fault/maintenance data can be read from the registers specified in 4.11.3. Once the data has been read, the event record can be marked as having been read by writing a value of two to register 4x00400. Alternatively, since the G18 data type consists of bit fields, it is possible to both mark the current record as having been read and to automatically select the next unread record by writing a value of three to the register.

When the last (most recent) record has been accepted the event flag in the status register (3x00001) will reset. If the last record was accepted, by writing a value of three to the record selection register (4x00400), then a dummy record will appear in the event-record registers, with an "Event Type" value of 255. Attempting to select another record, when none are available, will result in a MODBUS exception code 3 - "Invalid value" (see section 4.3).

One possible event record extraction procedure is shown in Figure 6.

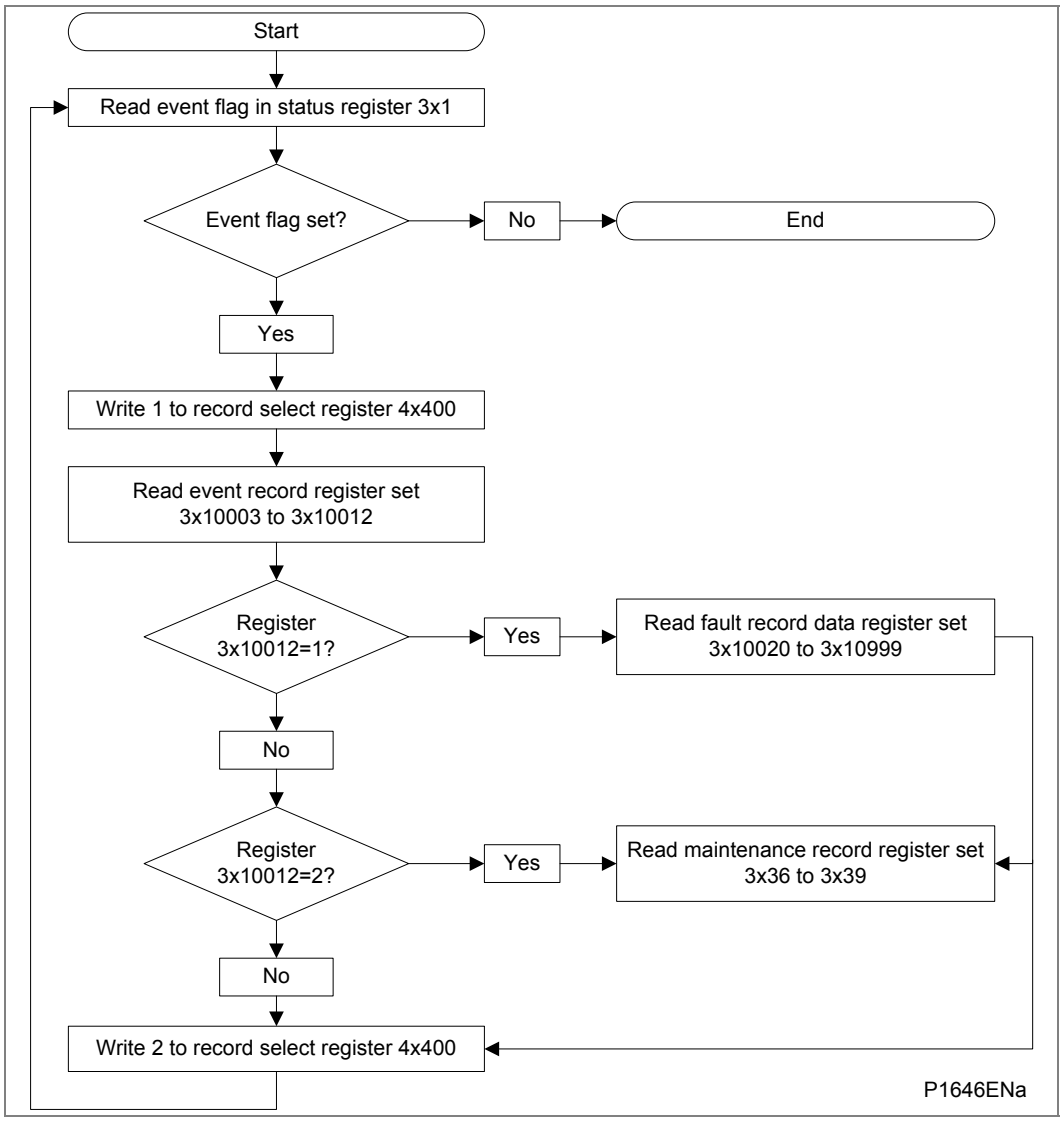

Figure 6 - Automatic event extraction procedure

4.11.3 Record Data

The location and format of the registers used to access the record data is the same whether they have been selected using manual or automatic extraction mechanisms detailed above.

Description	Register	Length (registers)	Comments
Time Stamp	3x10003	4	See G12 data type the Relay Menu Database, *P341/EN MD*.
Event Type	3x10007	1	Indicates the type of the event record. See G13 data type in the Relay Menu Database, *P341/EN MD* (additionally, a value of 255 indicates that the end of the event log has been reached).
Event Value	3x10008	2	Contains the associated status register value, as a string of binary flags, for relay-contact, opto-input, alarm, and protection events. Otherwise, it will have a value of zero. When a status value is supplied, the value represents the recorded value of the event types associated register pair, as indicated by the Event Origin value. Note - the protection-event status information is the value of the DDB status word that contains the protection DDB that caused the event
Event Origin	3x10010	1	The Event Original value indicates the MODBUS Register pair where the change occurred. (Note subtracting 3000 from the Event Origin value results in the MODBUS 3x memory-page register ID, subtracting one from this results in the MODBUS register address - see section 4.5.1.2. The resultant register address can be used in a function code 4 MODBUS query) Possible values are: 11 (3x00011): Alarm Status 1 event 13 (3x00013): Alarm Status 2 event 15 (3x00015: Alarm Status 3 event 23 (3x11023): Relay contact event (2 registers: DDB 0-31 status) 25 (3x11025): Status input event (2 registers: DDB 32-63 status) 27 to 85 (3x11027 – 3x11085): Protection events (Indicates the 32 bit DDB status word that was the origin of the event) For General events, Fault events, and Maintenance events a value of zero will be returned.
Event Index	3x10011	1	The Event Index value is used to distinguish between events with the same Event Type and Event Origin. The registers value depends on the type of the event: For protection events, the value is the ID of the DDB that caused the event. For alarm events, the value is the ID of the alarm that caused the event. In both cases, the value includes the direction of the state transition in the most significant bit. This direction bit is 1 for a 0-1 (low to high) change, and 0 for a 1-0 (high to low) change. For all other types of events, it will have a value of zero.
Additional Data Present	3x10012	1	Indicates whether the record has additional data. 0: Indicates that there is no additional data. 1: Indicates that fault record data can be read from 3x10020 to 3x10999. (Note - the exact number of fault record registers depends on the individual product - see Relay Menu Database, *P341/EN MD).* 2: Indicates that maintenance record data can be read from registers 3x36 to 3x39.

Table 8 - Event record extraction registers

If a fault record or maintenance record is directly selected using the manual mechanism, then the data can be read from the fault or maintenance data register ranges specified above. The event record data in registers 3x10003 to 3x10012 will not be valid.

See the Relay Menu Database, *P341/EN MD* for the record values for each event.

The general procedure for decoding an event record is to use the value of the “Event Type” field combined with the value of the “Event Index” field to uniquely identify the event. The exceptions to this are event types 4, 5, 7, 8, & 9.

Event types 4 “Relay Contact Output Events“ and 5 “Opto-Isolated Status Input Events” only provide the value of the input or output status register (as indicated by the Event Origin value) at the time the event occurred. If event transition information for each input or output is required then this must be deduced by comparing the event value with the previous event value (for identically typed events records).

Event type 7 “General Event” events are solely identified by their “Event Value”.

Event types 8 “Fault Record” and 9 “Maintenance Record” require additional registers to be read when the associated additional data is available (As noted at the beginning of section 4.11, it should not be assumed that the additional data will be available for fault and maintenance record events). The Fault record registers in the range 3x10020 to 3x10999 (the exact number of registers depends on the individual product) are clearly documented in the 3x register-map in the Relay Menu Database, *P341/EN MD*. The two additional 32-bit maintenance record register-pairs consist of a maintenance record type (register pair 3x36/7) and a type-specific error code (register pair 3x38/9). Table 9 lists the different types of maintenance record available from the product.

Maintenance Record	Front Panel Text	Record Type 3x00036
Power on test errors (non-fatal)		
Watchdog 1 failure (fast)	Fast W'Dog Error	0
Battery fail	Battery Failure	1
Battery-backed RAM failure	BBRAM Failure	2
Field voltage failure	Field Volt Fail	3
Ribbon bus check failure	Bus Reset Error	4
Watchdog 2 failure (slow)	Slow W'Dog Error	5
Continuous self-test errors		
SRAM bus failure	SRAM Failure Bus	6
SRAM cell failure	SRAM Failure Blk.	7
Flash EPROM checksum failure	FLASH Failure	8
Program code verify failure	Code Verify Fail	9
Battery-backed RAM failure	BBRAM Failure	10
Battery fail	Battery Failure	11
Field Voltage failure	Field Volt Fail	12
EEPROM failure	EEPROM Failure	13
Fatal software exception	Software Failure	14
Incorrect hardware configuration	H/W Verify Fail	15
Software exception (typically non-fatal)	Non Standard	16
Analog module failure	Ana. Sample Fail	17
Ethernet card error	NIC Soft Error	18

Table 9 - Maintenance record types

4.11.4 Event Record Deletion

It is possible to independently delete ("clear") the stored event, fault, and maintenance record queues. This is accomplished by writing a value of 1, 2, or 3 to register 4x401 (G6 data type), respectively.

This register also provides an option to reset the product's front panel indications, which has the same effect as pressing the front panel "Clear" key when viewing alarm indications using the front panel user interface. This is accomplished by writing a value of 4 to register 4x401.

See also section 4.12.4 for details about deleting disturbance records.

4.11.5 Legacy Event Record Support

Version 31 of the P341 product introduced a new set of 3x registers for the presentation of the event and fault record data. For legacy compatibility, the original registers are supported and are described in this section. They should not be used for new installations and they are correspondingly described as previous MODBUS address in the 3x-register table in the Relay Menu Database, *P341/EN MD*.

Table 10 provides a mapping between the obsolete event record 3x-registers and the registers used in the event record discussions in the prior sub-sections.

The obsolete fault record data between registers 3x113 and 3x199, and 3x490 and 3x499, now exists between registers 3x10020 and 3x10999. In comparison with the obsolete fault record data, the data between registers 3x10020 and 3x10999 is ordered (slightly) differently and it contains new data values. These new values (since version 31 of the product) are not available in the obsolete fault-record register sets.

The maintenance-record registers 3x36 to 3x39 remain unaffected by this evolution.

Description	Obsolete Register	Length (Registers)	Corresponds to Register
Number of stored event records	3x00100	1	3x10000
Number of stored fault records	3x00101	1	3x10001
Number of stored maintenance records	3x00102	1	3x10002
Time Stamp	3x00103	4	3x10003
Event Type	3x00107	1	3x10007
Event Value	3x00108	2	3x10008
Event Origin	3x00110	1	3x10010
Event Index	3x00111	1	3x10011
Additional Data Present	3x00112	1	3x10012

Table 10 - Correspondence of obsolete event record 3x registers with their counterparts

4.12 Disturbance Record Extraction

The product provides facilities for both manual and automatic extraction of disturbance records. The two methods differ only in the mechanism for selecting a disturbance record, the method for extracting the data and the format of the data are identical. Note that the record format and extraction procedures have changed for version “20” of the product software and are not compatible with prior versions.

Records extracted are presented in IEEE COMTRADE format. This involves extracting two files: an ASCII text configuration file, and a binary data file.

Each file is extracted by repeatedly reading a data-page until all of the file’s data has been transferred. The data-page is made up of 127 registers; providing a maximum of 254 bytes per register block request.

4.12.1 Interface Registers

The following set of registers is presented to the master station to support the extraction of uncompressed disturbance records:

Register	Name	Description
3x00001	Status register	Provides the status of the product as bit flags: b0 Out of service b1 Minor self test failure b2 Event b3 Time synchronization b4 Disturbance b5 Fault b6 Trip b7 Alarm b8 to b15 Unused A ‘1’ in bit “b4” indicates the presence of one or more disturbance records.
3x00800	Number of stored disturbances	Indicates the total number of disturbance records currently stored in the product, both extracted and unextracted.
3x00801	Unique identifier of the oldest disturbance record	Indicates the unique identifier value for the oldest disturbance record stored in the product. This is an integer value used in conjunction with the ‘Number of stored disturbances’ value to calculate a value for manually selecting records.
4x00250	Manual disturbance record selection register	This register is used to manually select disturbance records. The values written to this cell are an offset of the unique identifier value for the oldest record. The offset value, which ranges from 0 to the No of stored disturbances - 1, is added to the identifier of the oldest record to generate the identifier of the required record.
4x00400	Record selection command register	This register is used during the extraction process and has a number of commands. These are: b0 Select next event b1 Accept event b2 Select next disturbance record b3 Accept disturbance record b4 Select next page of disturbance data b5 Select data file
3x00930 to 3x00933	Record time stamp	These registers return the timestamp of the disturbance record.
3x00802	Number of registers in data page	This register informs the master station of the number of registers in the data page that are populated.

Register	Name	Description
3x00803 to 3x00929	Data page registers	These 127 registers are used to transfer data from the product to the master station.
3x00934	Disturbance record status register	The disturbance record status register is used during the extraction process to indicate to the master station when data is ready for extraction. See next table.
4x00251	Data file format selection	This is used to select the required data file format. This is reserved for future use.

Table 11 - Disturbance record extraction registers

The Disturbance Record status register will report one of the following values:

State		Description
Idle		This will be the state reported when no record is selected; such as after power on or after a record has been marked as extracted.
Busy		The product is currently processing data.
Page ready		The data page has been populated and the master can now safely read the data.
Configuration complete		All of the configuration data has been read without error.
Record complete	4	All of the disturbance data has been extracted.
Disturbance overwritten	5	An error occurred during the extraction process where the disturbance being extracted was overwritten by a new record.
No unextracted disturbances	6	An attempt was made by the master station to automatically select the next oldest unextracted disturbance when all records have been extracted.
Not a valid disturbance	7	An attempt was made by the master station to manually select a record that did not exist in the product.
Command out of sequence	8	The master station issued a command to the product that was not expected during the extraction process.

Table 12 - Disturbance record status register (3x934) values

4.12.2 Extraction Procedure

The following procedure must be used to extract disturbance records from the product. The procedure is split into four sections:

1. Selection of a disturbance - either manually or automatically
2. Extraction of the configuration file
3. Extraction of the data file
4. Accepting the extracted record (automatic extraction only)

4.12.2.1 Manual Extraction Procedure

The procedure used to extract a disturbance manually is shown in Figure 7. The manual method of extraction does not allow for the acceptance of disturbance records.

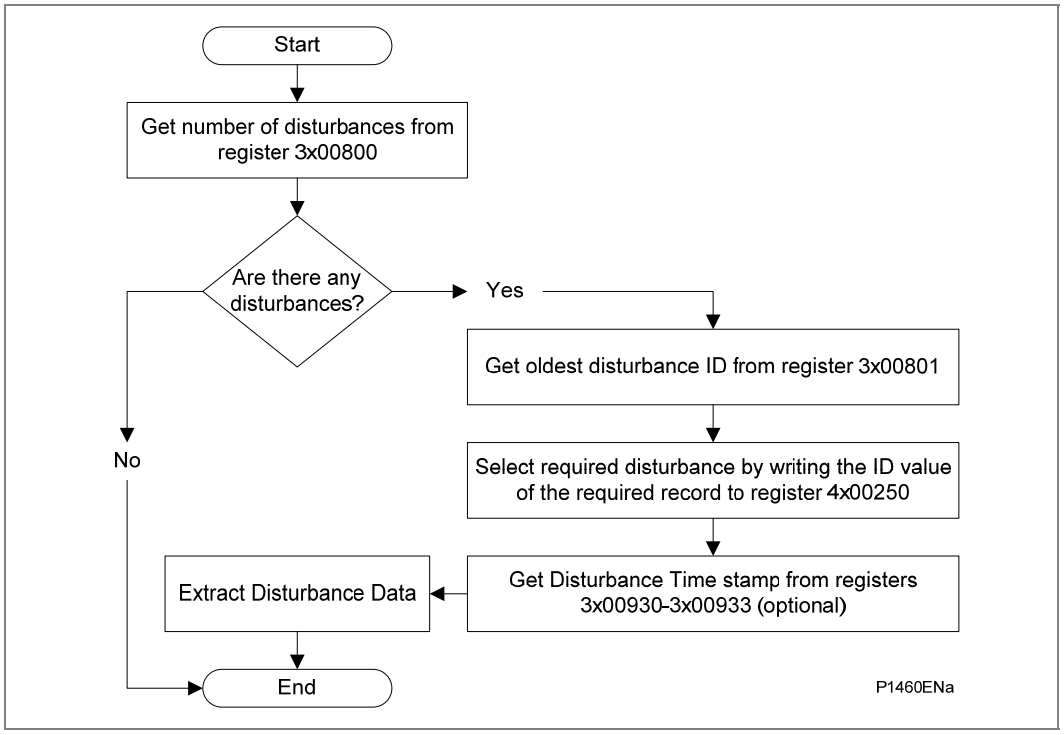

Figure 7 - Manual selection of a disturbance record

4.12.2.2 Automatic Extraction Procedure - Option 1

There are two methods that can be used for automatically extracting disturbances. The procedure for the first method is shown in Figure 8. This also shows the acceptance of the disturbance record once the extraction is complete.

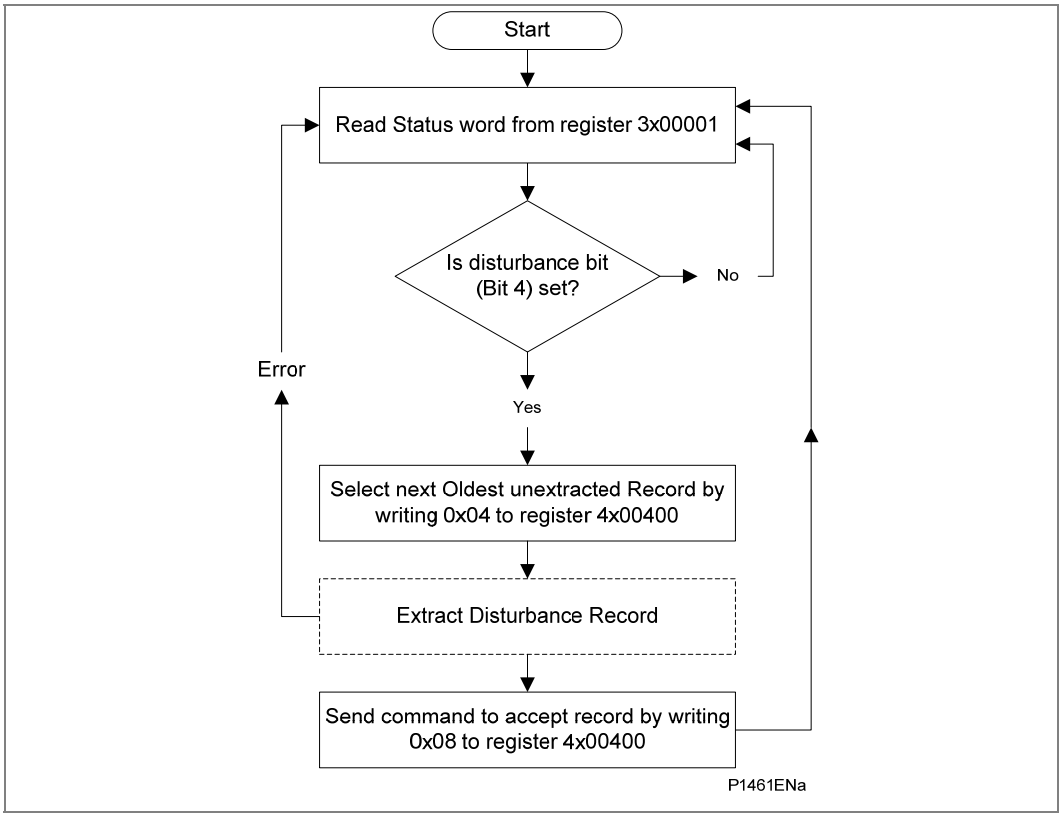

Figure 8 - Automatic selection of a disturbance - option 1

4.12.2.3 Automatic Extraction Procedure - Option 2

The second method that can be used for automatic extraction is shown in Figure 9. This also shows the acceptance of the disturbance record once the extraction is complete.

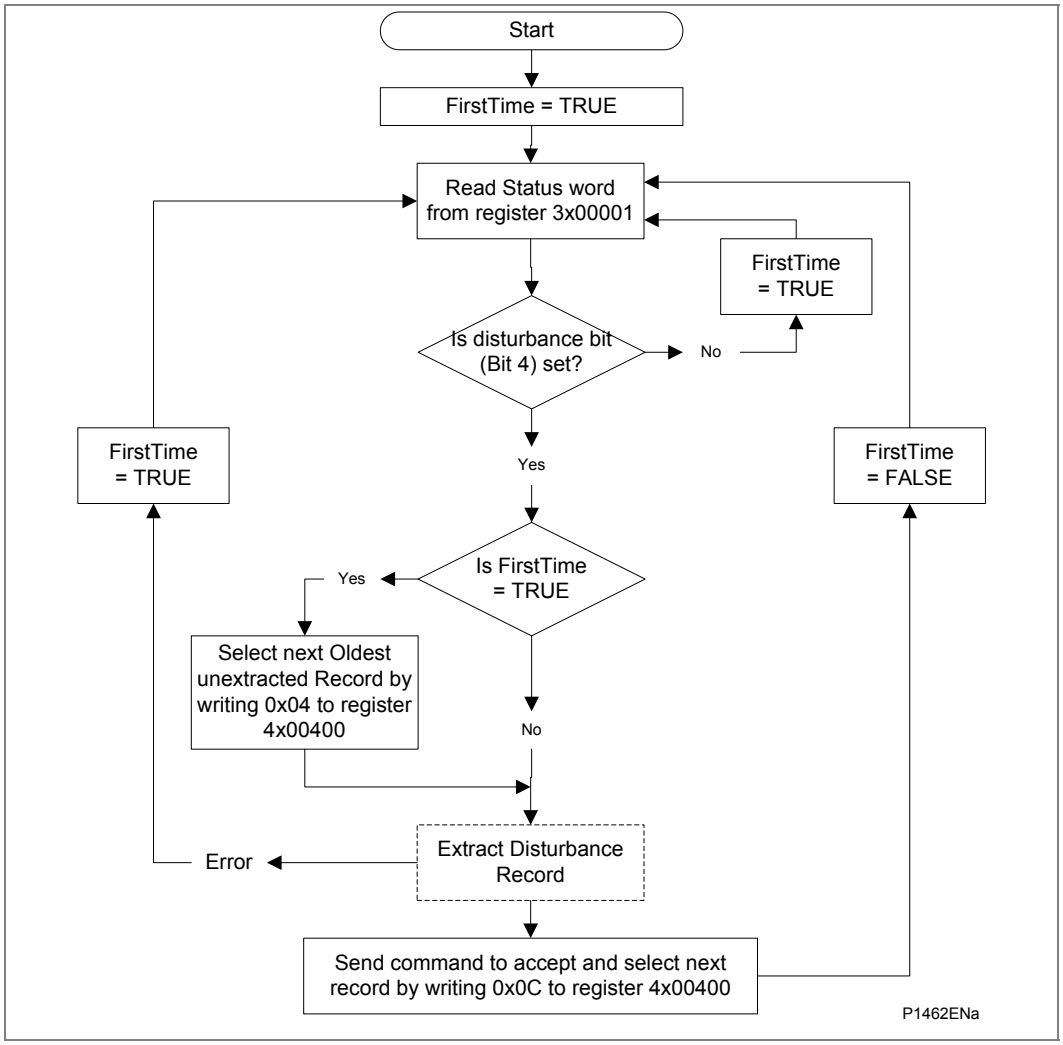

Figure 9 - Automatic selection of a disturbance - option 2

4.12.2.4 Extracting the disturbance data

Extraction of a selected disturbance record is a two-stage process that involves reading the configuration file first followed by the data file.

The following diagram shows how the configuration file is read:

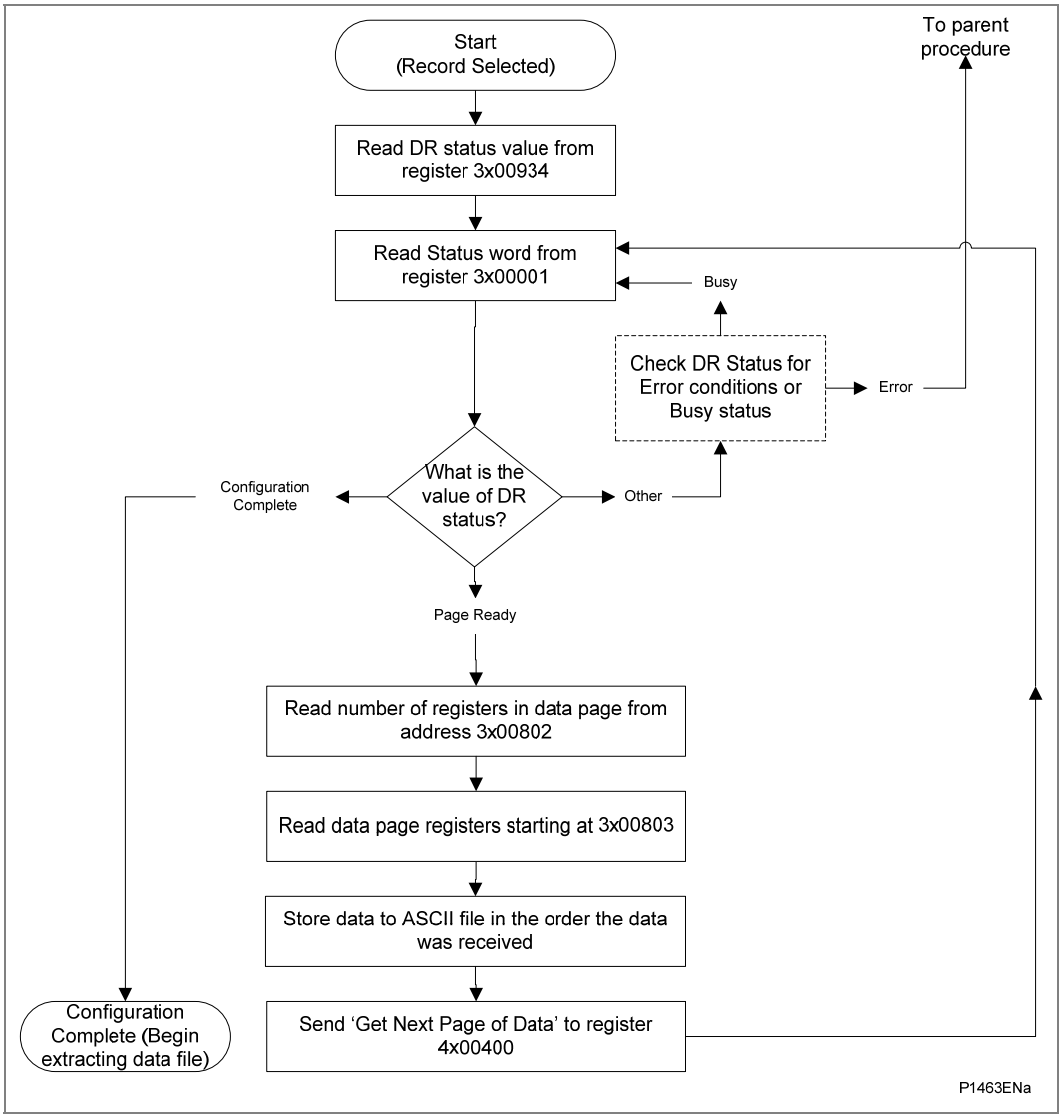

Figure 10 - Extracting the COMTRADE configuration file

The following diagram shows how the data file is extracted:

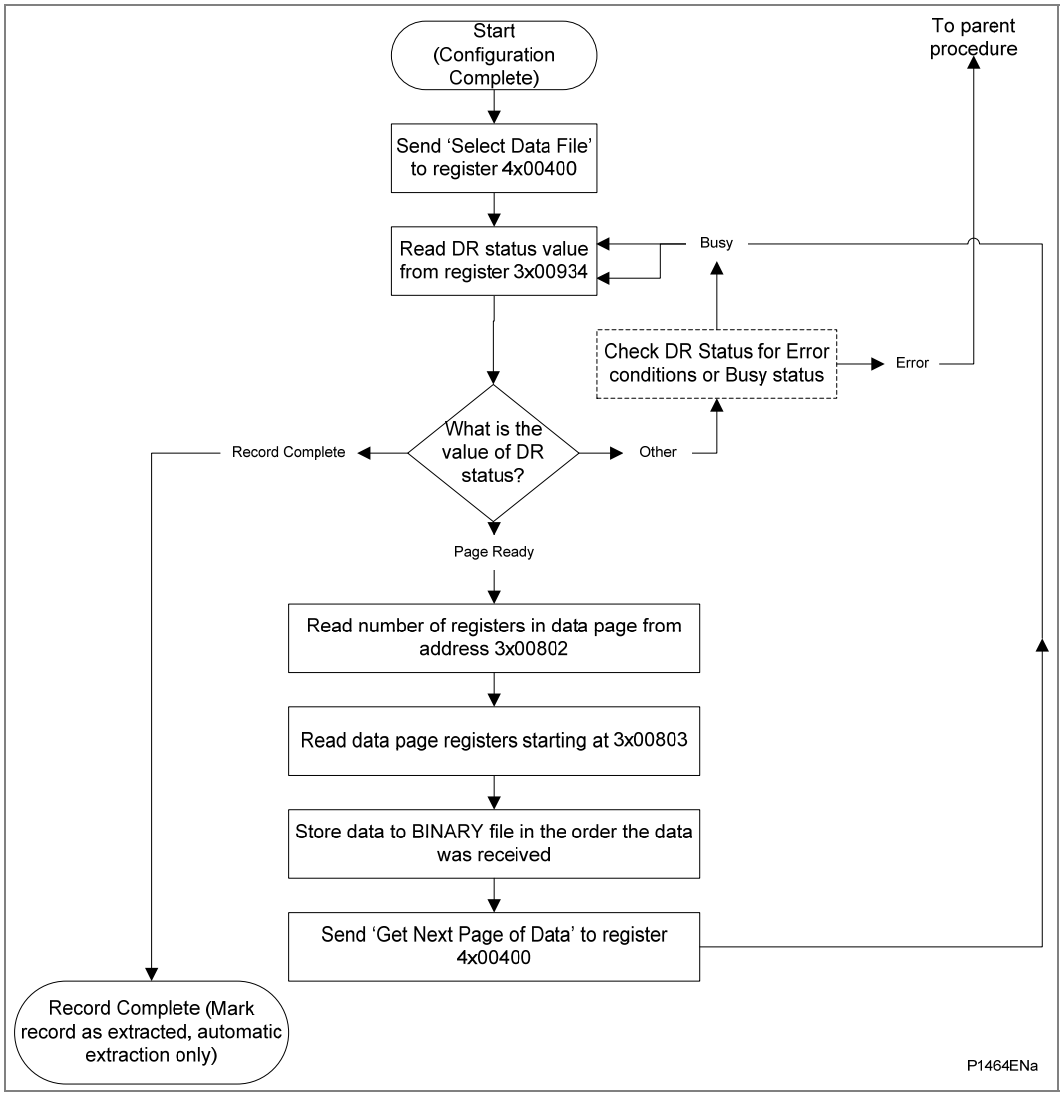

Figure 11 - Extracting the COMTRADE binary data file

During the extraction of a COMTRADE file, an error may occur that will be reported in the disturbance record status register, 3x934. This can be caused by the product overwriting the record being extracted or by the master issuing a command that is not within the bounds of the extraction procedure.

4.12.3 Storage of Extracted Data

The extracted data needs to be written to two separate files. The first is the configuration file, which is in ASCII text format, and the second is the data file, which is in a binary format.

4.12.3.1 Storing the Configuration File

As the configuration data is extracted from the product, it should be stored to an ASCII text file with a '.cfg' file extension. Each register in the page is a G1 format 16-bit unsigned integer that is transmitted in big-endian byte order. The master must write the configuration file page-data to the file in ascending register order with each register's high order byte written before its low order byte, until all the pages have been processed.

4.12.3.2 Storing the Binary Data File

As the binary data is extracted from the product, it should be stored to a binary file with the same name as the configuration file, but with a '.dat' file extension instead of the '.cfg' extension. Each register in the page is a G1-format 16-bit unsigned integer that is transmitted in big-endian byte order. The master must write the page data to a file in ascending register order with each register's high order byte written before its low order byte until all the pages have been processed.

4.12.4 Disturbance Record Deletion

All of the disturbance records stored in the product can be deleted ("cleared") by writing 5 to the record control register 4x401 (G6 data type). See also section 4.11.4 for details about event record deletion.

4.13 Setting Changes

The product settings can be split into two categories:

- Control and support settings
- Disturbance record settings and protection setting groups

Changes to settings within the control and support area are executed immediately. Changes to the protection setting groups or the disturbance recorder settings are stored in a temporary 'scratchpad' area and must be confirmed before they are implemented. All the product settings are 4x page registers (see Relay Menu Database, *P341/EN MD*). The following points should be noted when changing settings:

- Settings implemented using multiple registers must be written to using a multi-register write operation. The product does not support write access to sub-parts of multi-register data types.
- The first address for a multi-register write must be a valid address. If there are unmapped addresses within the range being written to then the data associated with these addresses will be discarded.
- If a write operation is performed with values that are out of range then an "illegal data" response code will be produced. Valid setting values within the same write operation will be executed.
- If a write operation is performed attempting to change registers that require a higher level of password access than is currently enabled then all setting changes in the write operation will be discarded.

4.13.1 Password Protection

The product's settings can be subject to Password protection. The level of password protection required to change a setting is indicated in the 4x register-map table in the Relay Menu Database, *P341/EN MD*. Level 2 is the highest level of password access, level 0 indicates that no password is required.

The following registers are available to control Password protection:

- 4x00001 & 4x00002 Password Entry
- 4x00022 Default Password Level
- 4x00023 & 4x00024 Setting to Change Password Level 1
- 4x00025 & 4x00026 Setting to Change Password Level 2
- 3x00010 Current Access Level (read only)

4.13.2 Control and Support Settings

Control and support settings are committed immediately when a value is written to such a register. The MODBUS registers in this category are:

- 4x00000-4x00599
- 4x00700-4x00999
- 4x02049 to 4x02052
- 4x10000-4x10999

4.13.2.1 Time Synchronization

The value of the product's real time clock can be set by writing the desired time (see section 4.16) to registers 4x02049 through 4x02052. These registers are standard to Schneider Electric MiCOM products, which facilitates the use of broadcast of a time synchronization packet -being a block write to the time setting registers sent to slave address zero.

When the product's time has been set via these registers the Time Synchronized flag in the MODBUS Status Register (3x1: type G26) will be set. The product automatically clears this flag if more than five minutes has elapsed since these registers were last written to.

A "Time synchronization" event will be logged if the new time value is more than two seconds different from the current value.

4.13.3 Disturbance Recorder Configuration Settings

Disturbance recorder configuration-settings are written to a scratchpad memory area. A confirmation procedure is required in order to commit the contents of the scratchpad to the disturbance recorder's set-up, which ensures that the recorders configuration is consistent at all times. The contents of the scratchpad memory can be discarded with the abort procedure. The scratchpad confirmation and abort procedures are described in section 4.13.5.

The disturbance recorder configuration registers are in the range:

- 4x00600-4x00699

4.13.4 Protection Settings

Protection configuration-settings are written to a scratchpad memory area. A confirmation procedure is required in order to commit the contents of the scratchpad to the product's protection functions, which ensures that their configuration is consistent at all times. The contents of the scratchpad memory can be discarded with the abort procedure. The scratchpad confirmation and abort procedures are described in section 4.13.5.

Note	*The product supports four groups of protection settings. One protection-group is active and the other three are either dormant or disabled. The active protection-group can be selected by writing to register 4x00404. An illegal data response will be returned if an attempt is made to set the active group to one that has been disabled.*

The MODBUS registers for each of the four groups are repeated within these ranges:

- Group 1 4x01000-4x02999, 4x11000-4x12999
  (Note that registers 4x02049 to 4x02052 are not part of protection setting group #1 and therefore do not repeat in any of the other protection setting groups. These registers are for time synchronization purposes and are standard for most Schneider Electric products. See section 4.13.2.1.)
- Group 2 4x03000-4x04999, 4x13000-4x14999
- Group 3 4x05000-4x06999, 4x15000-4x16999
- Group 4 4x07000-4x08999, 4x17000-4x18999

4.13.5 Scratchpad Management

Register 4x00405 can be used to either confirm or abort the setting changes within the scratchpad area. In addition to the basic editing of the protection setting groups, the following functions are provided:

- Default values can be restored to a setting group or to all of the product settings by writing to register 4x00402.
- It is possible to copy the contents of one setting group to another by writing the source group to register 4x00406 and the target group to 4x00407.
- The setting changes performed by either of the two operations defined above are made to the scratchpad area. These changes must be confirmed by writing to register 4x00405.

4.14 Register Data Types

The product maps one or more MODBUS registers to data-typed information contained within an internal database. These data-types are referred to as G-Types since they have a 'G' prefixed identifier. The Relay Menu Database, *P341/EN MD* gives a complete definition of the all of the G-Types used in the product.

In general, the data types are transmitted in high byte to low byte order, which is some times called "Big Endian format". This may require the MODBUS master to reorder the received bytes into a format compliant with its byte-order and register order (for multi-register G-Types) conventions. Most MODBUS masters provide byte-swap and register-swap device (or data point) configuration to cope with the plethora of implementations.

The product's data-types are atomic in nature. This means that the multi-register types cannot be read (or written) on an individual register basis. All of the registers for a multi-register data-typed item must be read (or written) with a single block read (or write) command.

The following subsections provide some additional notes for a few of the more complex G-Types.

4.15 Numeric Setting (Data Types G2 & G35)

Numeric settings are integer representations of real (non-integer) values. The register value is the number of setting increments (or steps) that the real value is away from the settings real minimum value. This is expressed by the formula:

$S_{real} = S_{min.} + (S_{inc.} \times S_{numeric})$

Where:

S_{real} Setting real value
$S_{min.}$ Setting real minimum value
$S_{inc.}$ Setting real increment (step) value
$S_{numeric}$ Setting numeric (register) value

For example, a setting with a real value setting range of 0.01 to 10 in steps of 0.01 would have the following numeric setting values:

Real value (S_{real})	Numeric value ($S_{numeric}$)
0.01	0
0.02	1
1.00	99

Table 13 - Example of numeric settings

The G2 numeric data type uses 1 register as an unsigned 16-bit integer, whereas the G35 numeric data type uses 2 registers as an unsigned 32-bit integer. The G2 data type therefore provides a maximum setting range of 216 x S_{inc}. Similarly the G35 data type provides a maximum setting range of 232 x S_{inc}.

4.16 Date and Time Format (Data Type G12)

The date-time data type G12 allows real date and time information to be conveyed down to a resolution of 1ms. The data-type is used for record time-stamps and for time synchronization (see section 4.13.2.1).

The structure of the data type is shown in Table 14 and is compliant with the IEC60870-5-4 “Binary Time 2a” format.

Byte	Bit position							
	7	6	5	4	3	2	1	0
1	m7	m6	m5	m4	m3	m2	m1	m0
2	m15	m14	m13	m12	m11	m10	m9	m8
3	IV	R	I5	I4	I3	I2	I1	I0
4	SU	R	R	H4	H3	H2	H1	H0
5	W2	W1	W0	D4	D3	D2	D1	D0
6	R	R	R	R	M3	M2	M1	M0
7	R	Y6	Y5	Y4	Y3	Y2	Y1	Y0

Where:
m = 0…59,999 ms
I = 0…59 minutes
H = 0…23 Hours
W = 1…7 Day of week; Monday to Sunday, 0 for not calculated
D = 1…31 Day of Month
M = 1…12 Month of year; January to December
Y = 0…99 Years (year of century)
R = Reserved bit = 0
SU = Summertime: 0=standard time, 1=summer time
IV = Invalid value: 0=valid, 1=invalid
range = 0 ms…99 years

Table 14 - G12 date & time data type structure

The seven bytes of the structure are packed into four 16-bit registers. Two packing formats are provided: standard and reverse. The prevailing format is selected by the G238 setting in the “Date and Time” menu column or by register 4x306. (Note that this menu cell does not exist in P340 software revisions 01, 02, 03, 04, 05, 06, & 07. Maintenance revisions after software versions 03H, 04J, 05J, 06D and 07D will include just the time format selection register 4x306. Versions prior to this use just the standard time format.)

The standard packing format is the default and complies with the IEC60870-5-4 requirement that byte 1 is transmitted first, followed by byte 2 through to byte 7, followed by a null (zero) byte to make eight bytes in total. Since register data is usually transmitted in big-endian format (high order byte followed by low order byte), byte 1 will be in the high-order byte position followed by byte 2 in the low-order position for the first register. The last register will contain just byte 7 in the high order position and the low order byte will have a value of zero.

The reverse packing format is the exact byte transmission order reverse of the standard format. That is, the null (zero) byte is sent as the high-order byte of the first register and byte 7 as the register’s low-order byte. The second register’s high-order byte contains byte 6 and byte 5 in its low order byte.

Both packing formats are fully documented in the Relay Menu Database, P341/EN MD for the G12 type.

The principal application of the reverse format is for date-time packet format consistency with other products. This is especially true when there is a requirement for broadcast time synchronization with a mixture of such MiCOM products.

The data type provides only the year of century value; the century must be deduced. Simplistically the century could be imposed as 20 for applications not dealing with dates stored in this format from the previous (20th) century. Alternatively, the century can be calculated as the one that will produce the nearest time value to the current date. For example: 30-12-99 is 30-12-1999 when received in 1999 & 2000, but is 30-12-2099 when received in 2050. This technique allows 2 digit years to be accurately converted to 4 digits in a ±50 year window around the current datum.

The invalid bit has two applications:

1. It can indicate that the date-time information is considered inaccurate, but is the best information available.
2. Date-time information is not available.

The summertime bit is used to indicate that summertime (day light saving) is being used and, more importantly, to resolve the alias and time discontinuity which occurs when summertime starts and ends. This is important for the correct time correlation of time stamped records.

Note	*The value of the summertime bit does not affect the time displayed by the product).*

The day of the week field is optional and if not calculated will be set to zero.

The concept of time zone is not catered for by this data type and hence by the product. It is up to the end user to determine the time zone utilized by the product. Normal practice is to use UTC (universal co-ordinated time), which avoids the complications with day light saving time-stamp correlation's.

4.17 Power and Energy Measurement Data Formats (G29 & G125)

The power and energy measurements are available in two data formats, G29 integer format and G125 IEEE754 floating point format. The G125 format is to be preferred over the older G29 format.

4.17.1 Data Type G29

Data type G29 consists of three registers. The first register is the per unit power or energy measurement and is of type G28, which is a signed 16-bit quantity. The second and third registers contain a multiplier to convert the per unit value to a real value.

The multiplier is of type G27, which is an unsigned 32-bit quantity. Therefore, the overall value conveyed by the G29 data type must be calculated as G29=G28×G27.

The product calculates the G28 per unit power or energy value as G28=((measured secondary quantity) / (CT secondary) × (110 V / (VT secondary)). Since data type G28 is a signed 16-bit integer, its dynamic range is constrained to ±32768. This limitation should be borne in mind for the energy measurements, as the G29 value will saturate a long time before the equivalent G125 does.

The associated G27 multiplier is calculated as G27=(CT primary) × (VT primary / 110 V) when primary value measurements are selected, and as G27=(CT secondary) × (VT secondary / 110 V) when secondary value measurements are selected.

Due to the required truncations from floating point values to integer values in the calculations of the G29 component parts and its limited dynamic range, the use of the G29 values is only recommended when the MODBUS master cannot deal with the G125 IEEE754 floating point equivalents.

Note that the G29 values must be read in whole multiples of three registers. It is not possible to read the G28 and G27 parts with separate read commands.

Example:

For A-Phase Power (Watts) (registers 3x00300 - 3x00302) for a 110V nominal, In = 1A, VT ratio = 110V:110V and CT ratio = 1A:1A.

Applying A-phase 1A @ 63.51 V

A-phase Watts = ((63.51 V × 1A) / In=1A) × (110/Vn=110 V) = 63.51 Watts

The G28 part of the value is the truncated per unit quantity, which will be equal to 64 (40h).

The multiplier is derived from the VT and CT ratios set in the product, with the equation ((CT Primary) × (VT Primary) / 110 V)). Therefore, the G27 part of the value will equal 1. Hence the overall value of the G29 register set is 64×1 = 64 W.

The registers would contain:

3x00300 - 0040h
3x00301 - 0000h
3x00302 - 0001h

Using the previous example with a VT ratio = 110,000V:110 V and CT ratio = 10,000A : 1A the G27 multiplier would be 10,000A×110,000 V/110 = 10,000,000. The overall value of the G29 register set is 64 × 10,000,000 = 640 MW. (Note that there is an actual error of 49 MW in this calculation due to loss of resolution).

The registers would contain:

3x00300 - 0040h
3x00301 - 0098h
3x00302 - 9680h

4.17.2 Data Type G125

Data type G125 is a short float IEEE754 floating point format, which occupies 32-bits in two consecutive registers. The most significant 16-bits of the format are in the first (low order) register and the least significant 16-bits in the second register.

The value of the G125 measurement is as accurate as the product’s ability to resolve the measurement after it has applied the secondary or primary scaling factors as required. It does not suffer from the truncation errors or dynamic range limitations associated with the G29 data format.

5 IEC60870-5-103 INTERFACE

The IEC60870-5-103 interface is a master/slave interface with the relay as the slave device. The relay conforms to compatibility level 2; compatibility level 3 is not supported.

The following IEC60870-5-103 facilities are supported by this interface:

- Initialization (Reset)
- Time Synchronization
- Event Record Extraction
- General Interrogation
- Cyclic Measurements
- General Commands
- Disturbance Record Extraction
- Private Codes

5.1 Physical Connection and Link Layer

Two connection options are available for IEC60870-5-103, either the rear EIA(RS)485 port or an optional rear fiber optic port. Should the fiber optic port be fitted the selection of the active port can be made via the front panel menu or the front Courier port, however the selection will only be effective following the next relay power up.

For either of the two modes of connection it is possible to select both the relay address and baud rate using the front panel menu/front Courier. Following a change to either of these two settings a reset command is required to re-establish communications, see reset command description below.

5.2 Initialization

Whenever the relay has been powered up, or if the communication parameters have been changed a reset command is required to initialize the communications. The relay will respond to either of the two reset commands (Reset CU or Reset FCB), the difference being that the Reset CU will clear any unsent messages in the relays transmit buffer.

The relay will respond to the reset command with an identification message ASDU 5, the Cause of Transmission COT of this response will be either Reset CU or Reset FCB depending on the nature of the reset command. The content of ASDU 5 is described in the IEC60870-5-103 section of the Relay Menu Database, *P341/EN MD*.

In addition to the above identification message, if the relay has been powered up it will also produce a power up event.

5.3 Time Synchronization

The relay time and date can be set using the time synchronization feature of the IEC60870-5-103 protocol. The relay will correct for the transmission delay as specified in IEC60870-5-103. If the time synchronization message is sent as a send/confirm message then the relay will respond with a confirm. Whether the time-synchronization message is sent as a send confirm or a broadcast (send/no reply) message, a time synchronization Class 1 event will be generated/produced.

If the relay clock is being synchronized using the IRIG-B input then it will not be possible to set the relay time using the IEC60870-5-103 interface. An attempt to set the time via the interface will cause the relay to create an event with the current date and time taken from the IRIG-B synchronized internal clock.

5.4 Spontaneous Events

Events are categorized using the following information:

- Function Type
- Information Number

The IEC60870-5-103 profile in the Relay Menu Database, *P341/EN MD*, contains a complete listing of all events produced by the relay.

5.5 General Interrogation

The GI request can be used to read the status of the relay, the function numbers, and information numbers that will be returned during the GI cycle are indicated in the IEC60870-5-103 profile in the Relay Menu Database, *P341/EN MD*.

5.6 Cyclic Measurements

The relay will produce measured values using ASDU 9 on a cyclical basis; this can be read from the relay using a Class 2 poll (note ADSU 3 is not used). The rate at which the relay produces new measured values can be controlled using the Measurement Period setting. This setting can be edited from the front panel menu/front Courier port and is active immediately following a change.

The measurands transmitted by the relay are sent as a proportion of 2.4 times the rated value of the analog value.

5.7 Commands

A list of the supported commands is contained in the Relay Menu Database, *P341/EN MD*. The relay will respond to other commands with an ASDU 1, with a Cause Of Transmission (COT) indicating ‘negative acknowledgement’.

5.8 Test Mode

It is possible using either the front panel menu or the front Courier port to disable the relay output contacts to allow secondary injection testing to be performed. This is interpreted as ‘test mode’ by the IEC60870-5-103 standard. An event will be produced to indicate both entry to and exit from test mode. Spontaneous events and cyclic measured data transmitted whilst the relay is in test mode will have a COT of ‘test mode’.

5.9 Disturbance Records

The disturbance records are stored in uncompressed format and can be extracted using the standard mechanisms described in IEC60870-5-103. Note IEC60870-5-103 only supports up to 8 records.

5.10 Blocking of Monitor Direction

The relay supports a facility to block messages in the Monitor direction and also in the Command direction. Messages can be blocked in the Monitor and Command directions using the menu commands, Communications - CS103 Blocking - Disabled/Monitor Blocking/Command Blocking or DDB signals Monitor Blocked and Command Blocked.

6 DNP3.0 INTERFACE

6.1 DNP3.0 Protocol

The DNP3.0 protocol is defined and administered by the DNP Users Group. Information about the user group, DNP3.0 in general and the protocol specifications can be found on their Internet site:

www.dnp.org

The descriptions given here are intended to accompany the device profile document that is included in the Relay Menu Database, *P341/EN MD*. The DNP3.0 protocol is not described here, please refer to the documentation available from the user group. The device profile document specifies the full details of the DNP3.0 implementation for the relay. This is the standard format DNP3.0 document that specifies which objects; variations and qualifiers are supported. The device profile document also specifies what data is available from the relay via DNP3.0. The relay operates as a DNP3.0 slave and supports subset level 2 of the protocol, plus some of the features from level 3.

DNP3.0 communication uses the EIA(RS)485 communication port at the rear of the relay. The data format is 1 start bit, 8 data bits, an optional parity bit and 1 stop bit. Parity is configurable (see menu settings below).

6.2 DNP3.0 Menu Setting

The settings shown in Table 15 are available in the menu for DNP3.0 in the 'Communications' column.

Setting	Range	Description
Remote Address	0 - 65534	DNP3.0 address of relay (decimal)
Baud Rate	1200, 2400, 4800, 9600, 19200, 38400	Selectable baud rate for DNP3.0 communication
Parity	None, Odd, Even	Parity setting
Time Sync.	Enabled, Disabled	Enables or disables the relay requesting time sync. from the master via IIN bit 4 word 1
DNP Need Time	1 - 30 mins	The duration of time waited, before requesting another time sync from the master.
DNP App Fragment	1 - 2048 bytes	The maximum message length (application fragment size) transmitted by the relay.
DNP App Timeout	1 -120s	Duration of time waited, after sending a message fragment and awaiting a confirmation from the master.
DNP SBO Timeout	1 - 10s	Duration of time waited, after receiving a select command and awaiting an operate confirmation from the master.
DNP Link Timeout	0 - 120s	Duration of time that the relay will wait for a Data Link Confirm from the master. A value of 0 means data link support disabled and 1 to 120 seconds is the timeout setting.

Table 15 - G12 date & time data type structure

6.3 Object 1 Binary Inputs

Object 1, binary inputs, contains information describing the state of signals within the relay, which mostly form part of the Digital Data Bus (DDB). In general these include the state of the output contacts and input optos, alarm signals and protection start and trip signals. The 'DDB number' column in the device profile document provides the DDB numbers for the DNP3.0 point data. These can be used to cross-reference to the DDB definition list that is also found in the Relay Menu Database, *P341/EN MD*. The binary input points can also be read as change events via object 2 and object 60 for class 1-3 event data.

6.4 Object 10 binary outputs

Object 10, binary outputs, contains commands that can be operated via DNP3.0. As such the points accept commands of type pulse on [null, trip, close] and latch on/off as detailed in the device profile in the Relay Menu Database, *P341/EN MD* and execute the command once for either command. The other fields are ignored (queue, clear, trip/close, in time and off time).

Due to that fact that many of the relay's functions are configurable, it may be the case that some of the object 10 commands described below are not available for operation. In the case of a read from object 10 this will result in the point being reported as off-line and an operate command to object 12 will generate an error response.

There is an additional image of the control inputs. Described as alias control inputs, they reflect the state of the control input, but with a dynamic nature.

- If the Control Input DDB signal is already SET and a new DNP SET command is sent to the Control Input, the Control Input DDB signal goes momentarily to RESET and then back to SET.
- If the Control Input DDB signal is already RESET and a new DNP RESET command is sent to the Control Input, the Control Input DDB signal goes momentarily to SET and then back to RESET.
- The diagram below shows the behavior when the Control Input is set to Pulsed or Latched.

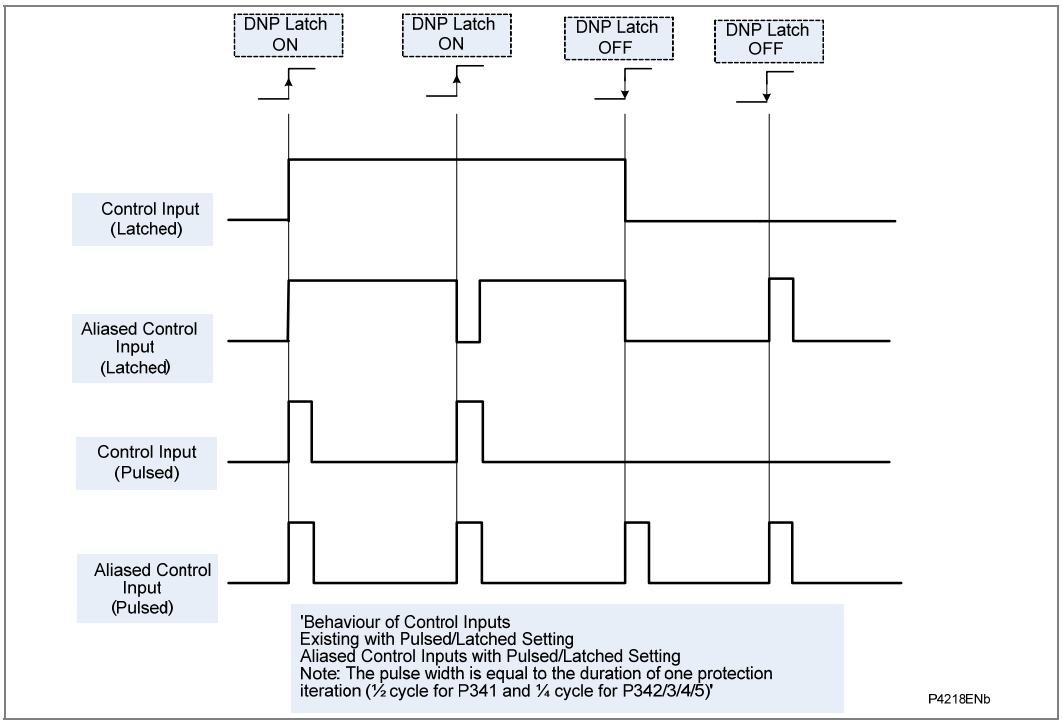

Figure 12 - Behavior of control inputs

Examples of object 10 points that maybe reported as off-line are:

- Activate setting groups — Ensure setting groups are enabled
- CB trip/close — Ensure remote CB control is enabled
- Reset NPS thermal — Ensure NPS thermal protection is enabled
- Reset thermal O/L — Ensure thermal overload protection is enabled
- Reset RTD flags — Ensure RTD Inputs is enabled
- Control inputs — Ensure control inputs are enabled

6.5 Object 20 Binary Counters

Object 20, binary counters, contains cumulative counters and measurements. The binary counters can be read as their present ‘running’ value from object 20, or as a ‘frozen’ value from object 21. The running counters of object 20 accept the read, freeze and clear functions. The freeze function takes the current value of the object 20 running counter and stores it in the corresponding object 21 frozen counter. The freeze and clear function resets the object 20 running counter to zero after freezing its value. Binary counter and frozen counter change event values are available for reporting from object 22 and object 23 respectively. Counter change events (object 22) only report the most recent change, so the maximum number of events supported is the same as the total number of counters. Frozen counter change events (object 23) are generated when ever a freeze operation is performed and a change has occurred since the previous freeze command. The frozen counter event queues will store the points for up to two freeze operations.

6.6 Object 30 Analog Input

Object 30, analog inputs, contains information from the relay's measurements columns in the menu. All object 30 points can be reported as 16 or 32 bit integer values with flag, 16 or 32 bit integer without flag as well as short floating-point values. Analogue values can be reported to the master station as primary, secondary or normalized values (which takes into account the relay's CT and VT ratios) and this is settable in the DNP3.0 Communications Column in the relay. Corresponding deadband settings can be displayed in terms of a primary, secondary or normalized value. Deadband point values can be reported and written using Object 34 variations. The deadband is the setting used to determine whether a change event should be generated for each point. The change events can be read via object 32 or object 60 and will be generated for any point whose value has changed by more than the deadband setting since the last time the data value was reported.

Any analog measurement that is unavailable at the time it is read will be reported as offline, e.g. the frequency when the current and voltage frequency is outside the tracking range of the relay or the thermal state when the thermal protection is disabled in the configuration column.

6.7 Object 40 Analog Output

The conversion to fixed-point format requires the use of a scaling factor, which is configurable for the various types of data within the relay e.g. current, voltage, phase angle etc. All Object 40 points report the integer scaling values and Object 41 is available to configure integer scaling quantities.

6.8 DNP3.0 Configuration using S1 Studio

A PC support package for DNP3.0 is available as part of S1 Studio to allow configuration of the relay's DNP3.0 response. The PC is connected to the relay via a serial cable to the 9-pin front part of the relay – see the Introduction chapter. The configuration data is uploaded from the relay to the PC in a block of compressed format data and downloaded to the relay in a similar manner after modification. The new DNP3.0 configuration takes effect in the relay after the download is complete. The default configuration can be restored at any time by choosing 'All Settings' from the 'Restore Defaults' cell in the menu 'Configuration' column.

In S1 Studio, the DNP3.0 data is displayed on a three main tabbed screens, one screen each for the point configuration, integer scaling and default variation (data format). The point configuration also includes tabs for binary inputs, binary outputs, counters and analogue input configuration.

7 IEC 61850 ETHERNET INTERFACE

7.1 Introduction

IEC 61850 is the international standard for Ethernet-based communication in substations. It enables integration of all protection, control, measurement and monitoring functions within a substation, and additionally provides the means for interlocking and inter-tripping. It combines the convenience of Ethernet with the security which is essential in substations today.

The MiCOM protection relays can integrate with the PACiS substation control systems, to complete Schneider Electrics offer of a full IEC 61850 solution for the substation. The majority of Px4x relay types can be supplied with Ethernet, in addition to traditional serial protocols. Relays which have already been delivered with UCA2.0 on Ethernet can be easily upgraded to IEC 61850.

7.2 What is IEC 61850?

IEC 61850 is an international standard, comprising 14 parts, which defines a communication architecture for substations.

The standard defines and offers much more than just a protocol. It provides:

- Standardized models for IEDs and other equipment within the substation
- Standardized communication services (the methods used to access and exchange data)
- Standardized formats for configuration files
- Peer-to-peer (e.g. relay to relay) communication

The standard includes mapping of data onto Ethernet. Using Ethernet in the substation offers many advantages, most significantly including:

- High-speed data rates (currently 100 Mbits/s, rather than 10’s of kbits/s or less used by most serial protocols)
- Multiple masters (called “clients”)
- Ethernet is an open standard in every-day use

Schneider Electric has been involved in the Working Groups which formed the standard, building on experience gained with UCA2.0, the predecessor of IEC 61850.

7.2.1 Interoperability

A major benefit of IEC 61850 is interoperability. IEC 61850 standardizes the data model of substation IEDs. This responds to the utilities’ desire of having easier integration for different vendors’ products, i.e. interoperability. It means that data is accessed in the same manner in different IEDs from either the same or different IED vendors, even though, for example, the protection algorithms of different vendors’ relay types remain different.

When a device is described as IEC 61850-compliant, this does not mean that it is interchangeable, but does mean that it is interoperable. You cannot simply replace one product with another, however the terminology is pre-defined and anyone with prior knowledge of IEC 61850 should be able very quickly integrate a new device without the need for mapping of all of the new data. IEC 61850 will inevitably bring improved substation communications and interoperability, at a lower cost to the end user.

7.2.2 Data Model

To ease understanding, the data model of any IEC 61850 IED can be viewed as a hierarchy of information. The categories and naming of this information is standardized in the IEC 61850 specification.

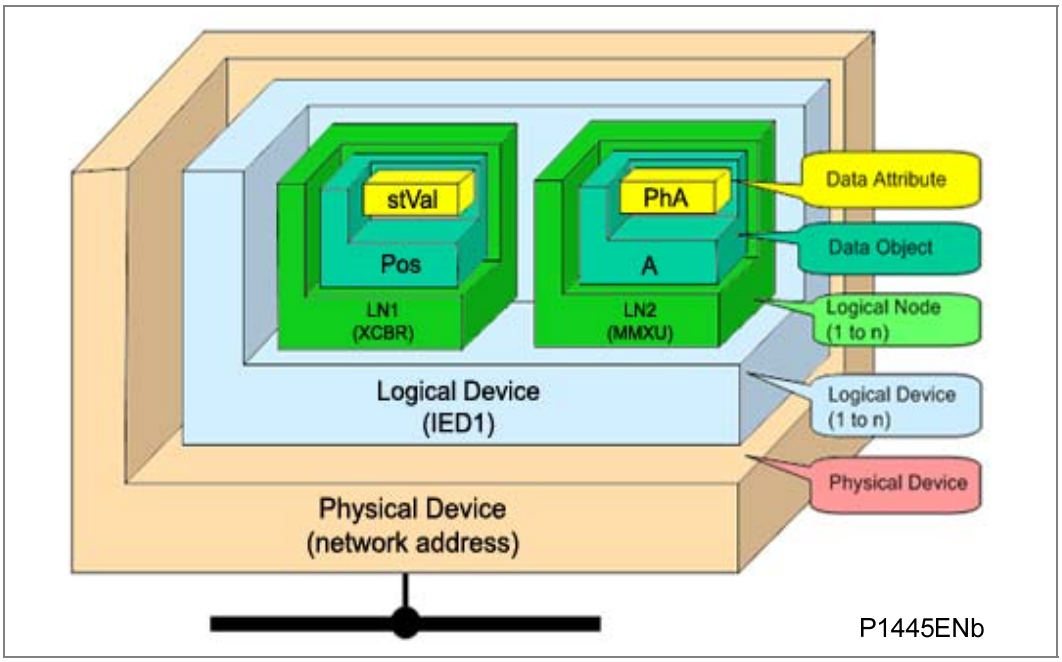

Figure 13 - Data model layers in IEC 61850

The levels of this hierarchy can be described as follows:

- Physical Device: Identifies the actual IED within a system. Typically the device's name or IP address can be used (for example **Feeder_1** or **10.0.0.2**).
- Logical Device: Identifies groups of related Logical Nodes within the Physical Device. For the relays, 5 Logical Devices exist: **Control**, **Measurements**, **Protection**, **Records**, **System**.
- Wrapper/Logical Node Instance: Identifies the major functional areas within the IEC 61850 data model. Either 3 or 6 characters are used as a prefix to define the functional group (wrapper) while the actual functionality is identified by a 4 character Logical Node name suffixed by an instance number. For example, XCBR1 (circuit breaker), MMXU1 (measurements), FrqPTOF2(overfrequency protection, stage 2).
- Data Object: This next layer is used to identify the type of data you will be presented with. For example, **Pos** (position) of Logical Node type **XCBR**.
- Data Attribute: This is the actual data (measurement value, status, description, etc.). For example, **stVal** (status value) indicating actual position of circuit breaker for Data Object type **Pos** of Logical Node type **XCBR**.

7.3 IEC 61850 in MiCOM relays

IEC 61850 is implemented in MiCOM relays by use of a separate Ethernet card. This card manages the majority of the IEC 61850 implementation and data transfer to avoid any impact on the performance of the protection.

In order to communicate with an IEC 61850 IED on Ethernet, it is necessary only to know its IP address. This can then be configured into either:

- An IEC 61850 “client” (or master), for example a PACiS computer (C264) or HMI, or
- An “MMS browser”, with which the full data model can be retrieved from the IED, without any prior knowledge

7.3.1 Capability

The IEC 61850 interface provides the following capabilities:

- Read access to measurements

All measurands are presented using the measurement Logical Nodes, in the ‘Measurements’ Logical Device. Reported measurement values are refreshed by the relay once per second, in line with the relay user interface.

- Generation of unbuffered reports on change of status/measurement

Unbuffered reports, when enabled, report any change of state in statuses and/or measurements (according to deadband settings).

- Support for time synchronization over an Ethernet link

Time synchronization is supported using SNTP (Simple Network Time Protocol); this protocol is used to synchronize the internal real time clock of the relays.

- GOOSE peer-to-peer communication

GOOSE communications of statuses are included as part of the IEC 61850 implementation. Please see section 7.6 for more details.

- Disturbance record extraction

Extraction of disturbance records, by file transfer, is supported by the relays. The record is extracted as an ASCII format COMTRADE file.

- Controls

The following control services are available:

- Direct Control
- Direct Control with enhanced security
- Select Before Operate (SBO) with enhanced security

Controls shall be applied to open and close circuit breakers via XCBR.Pos and DDB signals ‘Control Trip’ and ‘Control Close’.

System/LLN0. LLN0.LEDRs shall be used to reset any trip LED indications.

- Reports

Reports only include data objects that have changed and not the complete dataset. The exceptions to this are a General Interrogation request and integrity reports.

- Buffered Reports

Eight Buffered Report Control Blocks (BRCBs), are provided in SYSTEM/LLN0 in Logical Device 'System'

Buffered reports are configurable to use any configurable dataset located in the same Logical device as the BRCB (i.e. SYSTEM/LLN0)

- Unbuffered Reports

Sixteen Unbuffered Report Control Blocks (URCBs) are provided in SYSTEM/LLN0 in Logical Device 'System'

Unbuffered reports are configurable to use any configurable dataset located in the same Logical device as the URCB (i.e. SYSTEM/LLN0)

- Configurable Data Sets

It is possible to create and configure datasets in any Logical Node using the IED Configurator. The maximum number of datasets will be specified in an IEDs ICD file. An IED is capable of handling 100 datasets.

- Published GOOSE message

Eight GOCBs are provided in SYSTEM/LLN0.

- Uniqueness of control

Uniqueness of control mechanism is implemented in the P341 to have consistency with the PACiS mechanism. This requires the relay to subscribe to the OrdRun signal from all devices in the system and be able to publish such a signal in a GOOSE message.

- Select Active Setting Group

Functional protection groups can be enabled/disabled via private mod/beh attributes in Protection/LLN0.OcpMod object. Setting groups are selectable using the Setting Group Control Block class, (SGCB). The Active Setting Group can be selected using the System/LLN0.SP.SGCB.ActSG data attribute in Logical Device 'System'.

- Quality for GOOSE

It is possible to process the quality attributes of any Data Object in an incoming GOOSE message. Devices that do not support IEC 61850 Quality flags shall send quality attributes as all zeros.

- Address List

An ADdress List (ADL) document is produced for each IED which shows the mapping between the IEC 61850 data model and the internal data model of the IED. It includes a mapping in the reverse direction, which may be more useful. This document is separate from the PICS/MICS document.

- Originator of Control

Originator of control mechanism is implemented for operate response message and in the data model on the ST of the related control object, consistent with the PACiS mechanism.

Setting changes (e.g. of protection settings) are not supported in the current IEC 61850 implementation. In order to keep this process as simple as possible, such setting changes are done using S1 Studio Settings & Records program. This can be done as previously using the front port serial connection of the relay, or now optionally over the Ethernet link if preferred (this is known as "tunneling").

7.3.2 IEC 61850 Configuration

One of the main objectives of IEC 61850 is to allow IEDs to be directly configured from a configuration file generated at system configuration time. At the system configuration level, the capabilities of the IED are determined from an IED Capability Description (ICD) file which is provided with the product. Using a collection of these ICD files from varying products, the entire protection of a substation can be designed, configured and tested (using simulation tools) before the product is even installed into the substation.
To aid in this process, the S1 Studio Support Software provides an IED Configurator tool which allows the pre-configured IEC 61850 configuration file (an SCD file or CID file) to be imported and transferred to the IED. Alongside this, the requirements of manual configuration are satisfied by allowing the manual creation of configuration files for relays based on their original IED Capability Description (ICD) file.
Other features include the extraction of configuration data for viewing and editing, and a sophisticated error checking sequence which ensures that the configuration data is valid for sending to the IED and that the IED will function within the context of the substation.
To aid the user, some configuration data is available in the **IED CONFIGURATOR** column of the relay user interface, allowing read-only access to basic configuration data.

7.3.2.1 Configuration Banks

To promote version management and minimize down-time during system upgrades and maintenance, the relays have incorporated a mechanism consisting of multiple configuration banks. These configuration banks are categorized as:

- Active Configuration Bank
- Inactive Configuration Bank

Any new configuration sent to the relay is automatically stored into the inactive configuration bank, therefore not immediately affecting the current configuration. Both active and inactive configuration banks can be extracted at anytime.
When the upgrade or maintenance stage is complete, the IED Configurator tool can be used to transmit a command (to a single IED) authorizing the activation of the new configuration contained in the inactive configuration bank, by switching the active and inactive configuration banks. This technique ensures that the system down-time is minimized to the start-up time of the new configuration. The capability to switch the configuration banks is also available via the **IED CONFIGURATOR** column.
For version management, data is available in the **IED CONFIGURATOR** column in the relay user interface, displaying the SCL Name and Revision attributes of both configuration banks.

7.3.2.2 Network Connectivity

Note	*This section presumes a prior knowledge of IP addressing and related topics. Further details on this topic may be found on the Internet (search for IP Configuration) and in numerous relevant books.*

Configuration of the relay IP parameters (IP Address, Subnet Mask, Gateway) and SNTP time synchronization parameters (SNTP Server 1, SNTP Server 2) is performed by the IED Configurator tool, so if these parameters are not available via an SCL file, they must be configured manually.
If the assigned IP address is duplicated elsewhere on the same network, the remote communications will operate in an indeterminate way. However, the relay will check for a conflict on every IP configuration change and at power up. An alarm will be raised if an IP conflict is detected.
The relay can be configured to accept data from networks other than the local network by using the ‘Gateway’ setting.

7.4 Data Model of MiCOM Relays

The data model naming adopted in the Px30 and Px40 relays has been standardized for consistency. Hence the Logical Nodes are allocated to one of the five Logical Devices, as appropriate, and the wrapper names used to instantiate Logical Nodes are consistent between Px30 and Px40 relays.

The data model is described in the Model Implementation Conformance Statement (MICS) document, which is available separately. The MICS document provides lists of Logical Device definitions, Logical Node definitions, Common Data Class and Attribute definitions, Enumeration definitions, and MMS data type conversions. It generally follows the format used in Parts 7-3 and 7-4 of the IEC 61850 standard.

7.5 Communication Services of MiCOM relays

The IEC 61850 communication services which are implemented in the Px30 and Px40 relays are described in the Protocol Implementation Conformance Statement (PICS) document, which is available separately. The PICS document provides the Abstract Communication Service Interface (ACSI) conformance statements as defined in Annex A of Part 7-2 of the IEC 61850 standard.

7.6 Peer-to-Peer (GSE) Communications

The implementation of IEC 61850 Generic Substation Event (GSE) sets the way for cheaper and faster inter-relay communications. The generic substation event model provides the possibility for a fast and reliable system-wide distribution of input and output data values. The generic substation event model is based on the concept of an autonomous decentralization, providing an efficient method allowing the simultaneous delivery of the same generic substation event information to more than one physical device through the use of multicast services.

The use of multicast messaging means that IEC 61850 GOOSE uses a publisher-subscriber system to transfer information around the network*. When a device detects a change in one of its monitored status points it publishes (i.e. sends) a new message. Any device that is interested in the information subscribes (i.e. listens) to the data it contains.

*Note **	*Multicast messages cannot be routed across networks without specialized equipment.*

Each new message is re-transmitted at user-configurable intervals until the maximum interval is reached, in order to overcome possible corruption due to interference, and collisions. In practice, the parameters which control the message transmission cannot be calculated. Time must be allocated to the testing of GSE schemes before or during commissioning, in just the same way a hardwired scheme must be tested.

7.6.1 Scope

A maximum of 32 virtual inputs are available within the PSL which can be mapped directly to a published dataset in a GOOSE message (only 1 fixed dataset is supported). All published GOOSE signals are BOOLEAN values.

Each GOOSE signal contained in a subscribed GOOSE message can be mapped to any of the 32 virtual inputs within the PSL. The virtual inputs allow the mapping to internal logic functions for protection control, directly to output contacts or LEDs for monitoring.

The relay can subscribe to all GOOSE messages but only the following data types can be decoded and mapped to a virtual input:

- BOOLEAN

- BSTR2
- INT16
- INT32
- INT8
- UINT16
- UINT32
- UINT8

7.6.2 IEC 61850 GOOSE Configuration

All GOOSE configuration is performed via the IED Configurator tool available within the S1 Studio Support Software.

All GOOSE publishing configuration can be found under the 'GOOSE Publishing' tab in the configuration editor window. All GOOSE subscription configuration can be found under the 'External Binding' tab in the configuration editor window. Care should be taken to ensure that the configuration is correct, to ensure efficient GOOSE scheme operation.

Settings to enable GOOSE signaling and to apply Test Mode are available via the relay user interface.

7.7 Ethernet Functionality

Settings relating to a failed Ethernet link are available in the **COMMUNICATIONS** column of the relay user interface.

7.7.1 Ethernet Disconnection

IEC 61850 'Associations' are unique and made to the relay between the client (master) and server (IEC 61850 device). In the event that the Ethernet is disconnected, such associations are lost, and will need to be re-established by the client. The TCP_KEEPALIVE function is implemented in the relay to monitor each association, and terminate any which are no longer active.

7.7.2 Loss of Power

The relay allows the re-establishment of associations by the client without a negative impact on the relay's operation after having its power removed. As the relay acts as a server in this process, the client must request the association. Uncommitted settings are cancelled when power is lost, and reports requested by connected clients are reset and must be re-enabled by the client when it next creates the new association to the relay.

7.8 Redundant Ethernet Communication Ports

For information regarding the Redundant Ethernet communication ports and the three redundancy protocols available, RSTP (Rapid Spanning Tree Protocol), SHP (Self Healing Protocol) and DHP (Dual Homing Protocol), refer to the User Guide, *Px4x/EN REB*.

8 SECOND REAR COMMUNICATIONS PORT (COURIER)

Relays with Courier, MODBUS, IEC60870-5-103 or DNP3.0 protocol on the first rear communications port have the option of a second rear port, running the Courier language. The second port is designed typically for dial-up modem access by protection engineers/operators, when the main port is reserved for SCADA communication traffic. Communication is via one of three physical links: K-Bus, EIA(RS)485 or EIA(RS)232. The port supports full local or remote protection and control access by S1 Studio software.

When changing the port configuration between K-Bus, EIA(RS)485 and EIA(RS)232 it is necessary to reboot the relay to update the hardware configuration of the second rear port.

There is also provision for the EIA(RS)485 and EIA(RS)232 protocols to be configured to operate with a modem, using an IEC60870 10 bit frame.

Port configuration	Valid communication protocol
K-Bus	K-Bus
EIA(RS)232	IEC60870 FT1.2, 11-bit frame IEC60870, 10-bit frame
EIA(RS)485	IEC60870 FT1.2, 11-bit frame IEC60870, 10-bit frame

Table 16 - Available physical links and their corresponding valid protocols

If both rear communications ports are connected to the same bus, care should be taken to ensure their address settings are not the same, to avoid message conflicts.

8.1 Courier Protocol

The following documentation should be referred to for a detailed description of the Courier protocol, command set and link description.

- R6509 K-Bus Interface Guide
- R6510 IEC60870 Interface Guide
- R6511 Courier Protocol
- R6512 Courier User Guide

The second rear communications port is functionally the same as detailed in section 2.2 for a Courier rear communications port, with the following exceptions:

8.2 Event Extraction

Automatic event extraction is not supported when the first rear port protocol is Courier, MODBUS or CS103. It is supported when the first rear port protocol is DNP3.0.

8.3 Disturbance Record Extraction

Automatic disturbance record extraction is not supported when the first rear port protocol is Courier, MODBUS or CS103. It is supported when the first rear port protocol is DNP3.0.

8.4 Connection to the Second Rear Port

The second rear Courier port connects via the 9-way female D-type connector (SK4) in the middle of the card end plate (in between IRIG-B connector and lower D-type). The connection is compliant to EIA(RS)574.

8.4.1 For IEC60870-5-2 over EIA(RS)232.

Pin	Connection
1	No Connection
2	RxD
3	TxD
4	DTR#
5	Ground
6	No Connection
7	RTS#
8	CTS#
9	No Connection

Note # *These pins are control lines for use with a modem.*

Table 17 - EIA (RS)232 pin designation

8.4.2 For K-bus or IEC60870-5-2 over EIA(RS)485

Pin*	Connection
4	EIA(RS)485 - 1 (+ ve)
7	EIA(RS)485 - 2 (- ve)

*Note ** *All other pins unconnected.*

Note 1 *Connector pins 4 and 7 are used by both the EIA(RS)232and EIA(RS)485 physical layers, but for different purposes. Therefore, the cables should be removed during configuration switches.*

Note 2 *For the EIA(RS)485 protocol an EIA(RS)485 to EIA(RS)232 converter will be required to connect a modem or PC running S1, to the relay. A Schneider Electric CK222 is recommended.*

Note 3 *EIA(RS)485 is polarity sensitive, with pin 4 positive (+) and pin 7 negative (-).*

Note 4 *The K-Bus protocol can be connected to a PC via a KITZ101 or 102.*

Table 18 - EIA (RS)485 pin designation

9 SK5 PORT CONNECTION

The lower 9-way D-type connector (SK5) is currently unsupported. Do not connect to this port.

SYMBOLS AND GLOSSARY

CHAPTER SG

CONTENTS

TABLES

FIGURES

Notes:

1 ACRONYMS AND ABBREVIATIONS

Term	Description
<	Less than: Used to indicate an “under” threshold, such as undercurrent (current dropout).
>	Greater than: Used to indicate an “over” threshold, such as overcurrent (current overload)
A	Ampere
AA	Application Association
AC / ac	Alternating Current
ACSI	Abstract Communication Service Interface
ACSR	Aluminum Conductor Steel Reinforced
ALF	Accuracy Limit Factor
AM	Amplitude Modulation
ANSI	American National Standards Institute
AR	Auto-Reclose.
ARIP	Auto-Reclose In Progress
ASCII	American Standard Code for Information Interchange
ATEX	ATEX is the Potentially Explosive Atmospheres directive 94/9/EC
AUX / Aux	Auxiliary
AWG	American Wire Gauge
BAR	Block Auto-Reclose signal.
BCD	Binary Coded Decimal
BCR	Binary Counter Reading
BDEW	Bundesverband der Energie- und Wasserwirtschaft | Startseite (i.e. German Association of Energy and Water Industries)
BMP	BitMaP – a file format for a computer graphic
BOP	Blocking Overreach Protection - a blocking aided-channel scheme.
BPDU	Bridge Protocol Data Unit
BRCB	Buffered Report Control Block
BRP	Beacon Redundancy Protocol
BU	Backup: Typically a back-up protection element
C/O	A ChangeOver contact having normally-closed and normally-open connections: Often called a “form C” contact.
CB	Circuit Breaker
CB Aux.	Circuit Breaker auxiliary contacts: Indication of the breaker open/closed status.
CBF	Circuit Breaker Failure protection
CDC	Common Data Class
CF	Control Function
Ch	Channel: usually a communications or signaling channel
Check Synch	Check Synchronizing function
CLIO	Current Loop Input Output: 0-1 mA/0-10 mA/0-20 mA/4-20 mA transducer inputs and outputs CLI = current loop input - 0-1 mA/0-10 mA/0-20 mA/4-20 mA transducer input CLO = current loop output - 0-1 mA/0-10 mA/0-20 mA/4-20 mA transducer output
CIP	Critical Infrastructure Protection standards

Term	Description
CLK / Clk	Clock
Cls	Close - generally used in the context of close functions in circuit breaker control.
CMV	Complex Measured Value
CNV	Current No Volts
CPNI	Centre for the Protection of National Infrastructure
CRC	Cyclic Redundancy Check
CRP	Cross-network Redundancy Protocol
CRV	Curve (file format for curve information)
CRx	Channel Receive: Typically used to indicate a teleprotection signal received.
CS	Check Synchronism.
CSV	Comma Separated Values (a file format for database information)
CT	Current Transformer
CTRL	Control - as used for the Control Inputs function
CTS	Current Transformer Supervision: To detect CT input failure.
CTx	Channel Transmit: Typically used to indicate a teleprotection signal send.
CUL	Canadian Underwriters Laboratory
CVT	Capacitor-coupled Voltage Transformer - equivalent to terminology CCVT.
DAU	Data Acquisition Unit
DC	Data Concentrator
DC / dc	Direct Current
DCC	An Omicron compatible format
DCE	Data Communication Equipment
DDB	Digital Data Bus within the programmable scheme logic: A logic point that has a zero or 1 status. DDB signals are mapped in logic to customize the relay's operation.
DDR	Dynamic Disturbance Recorder
DEF	Directional Earth Fault protection: A directionalized ground fault aided scheme.
df/dt	Rate of Change of Frequency
df/dt>1	First stage of df/dt protection
DFT	Discrete Fourier Transform
DG	Distributed Generation
DHCP	Dynamic Host Configuration Protocol
DHM	Dual Homing Manager
DHP	Dual Homing Protocol
Diff	Differential protection.
DIN	Deutsches Institut für Normung (German standards body)
Dist	Distance protection.
DITA	Darwinian Information Typing Architecture
DLDB	Dead-Line Dead-Bus : In system synchronism check, indication that both the line and bus are de-energised.
DLLB	Dead-Line Live-Bus : In system synchronism check, indication that the line is de-energised whilst the bus is energised.
DLR	Dynamic Line Rating
DLY / Dly	Time Delay
DMT	Definite Minimum Time

Term	Description
DNP	Distributed Network Protocol
DPWS	Device Profile for Web Services
DSP	Digital Signal Processor
DST	Daylight Saving Time
DT	Definite Time: in the context of protection elements: An element which always responds with the same constant time delay on operation. Abbreviation of “Dead Time” in the context of auto-reclose:
DTD	Document Type Definition
DTOC	Definite Time Overcurrent
DTS	Date and Time Stamp
EF or E/F	Earth Fault (Directly equivalent to Ground Fault)
EIA	Electronic Industries Alliance
ELR	Environmental Lapse Rate
EMC	ElectroMagnetic Compatibility
ENA	Energy Networks Association
ER	Engineering Recommendation
ESD	Electrostatic Discharge
FAA	Ageing Acceleration Factor: Used by Loss of Life (LOL) element
FFail	A field failure (loss of excitation) element: Could be labeled 40 in ANSI terminology.
FFT	Fast Fourier Transform
FIR	Finite Impulse Response
FLC	Full load current: The nominal rated current for the circuit.
FLT / Flt	Fault - typically used to indicate faulted phase selection.
Fn or FN	Function
FPGA	Field Programmable Gate Array
FPS	Frames Per Second
FTP	File Transfer Protocol or Foil Twisted Pair
FWD, Fwd or Fwd.	Indicates an element responding to a flow in the “Forward” direction
Gen Diff	A generator differential element: Could be labeled 87G in ANSI terminology.
Gen-Xformer Diff	A generator-transformer differential element: Could be labeled 87GT in ANSI terminology.
GIF	Graphic Interchange Format – a file format for a computer graphic
GND / Gnd	Ground: used in distance settings to identify settings that relate to ground (earth) faults.
GOOSE	Generic Object Oriented Substation Event
GPS	Global Positioning System
GRP / Grp	Group. Typically an alternative setting group.
GSE	General Substation Event
GSSE	Generic Substation Status Event
GUESS	Generator Unintentional Energization at StandStill.
GUI	Graphical User Interface
HMI	Human Machine Interface

Term	Description
HSR	High-availability Seamless Ring
HTML	Hypertext Markup Language
I	Current
I/O	Input/Output
I/P	Input
IANA	Internet Assigned Numbers Authority
ICAO	International Civil Aviation Organization
ID	Identifier or Identification. Often a label used to track a software version installed.
IDMT	Inverse Definite Minimum Time. A characteristic whose trip time depends on the measured input (e.g. current) according to an inverse-time curve.
IEC	International Electro-technical Commission
IED	Intelligent Electronic Device - a term used to describe microprocessor-based controllers of power system equipment. Common types of IEDs include protective relaying devices, load tap changer controllers, circuit breaker controllers, capacitor bank switches, recloser controllers, voltage regulators, etc.
IEEE	Institute of Electrical and Electronics Engineers
IETF	Internet Engineering Task Force
IIR	Infinite Impulse Response
Inh	An Inhibit signal
Inst	An element with Instantaneous operation: i.e. having no deliberate time delay.
IP	Internet Protocol
IRIG	InterRange Instrumentation Group
ISA	International Standard Atmosphere
ISA	Instrumentation Systems and Automation Society
ISO	International Standards Organization
JPEF	Joint Photographic Experts Group – a file format for a computer graphic
L	Live
LAN	Local Area Network
LCD	Liquid Crystal Display: The front-panel text display on the relay.
LD	Level Detector: An element responding to a current or voltage below its set threshold.
LDOV	Level Detector for Overvoltage
LDUV	Level Detector for Undervoltage
LED	Light Emitting Diode: Red or green indicator on the front-panel.
LLDB	Live-Line Dead-Bus : In system synchronism check, indication that the line is energized whilst the bus is de-energized.
Ln	Natural logarithm
LN	Logical Node
LoL	A Loss of Load scheme, providing a fast distance trip without needing a signaling channel.
LPDU	Link Protocol Data Unit
LPHD	Logical Physical Device
MC	MultiCast
MCB	Miniature Circuit Breaker
MIB	Management Information Base
MICS	Model Implementation Conformance Statement

Term	Description
MIDOS	Modular Integrated DrawOut System
MMF	Magneto-Motive Force
MMS	Manufacturing Message Specification
MRP	Media Redundancy Protocol
MU	Merging Unit
MV	Measured Value
N	Neutral
N/A	Not Applicable
N/C	A Normally Closed or “break” contact: Often called a “form B” contact.
N/O	A Normally Open or “make” contact: Often called a “form A” contact.
NERC	North American Reliability Corporation
NIST	National Institute of Standards and Technology
NPS	Negative Phase Sequence
NVD	Neutral voltage displacement: Equivalent to residual overvoltage protection.
NXT	Abbreviation of “Next”: In connection with hotkey menu navigation.
O/C	Overcurrent
O/P	Output
OCB	Oil Circuit Breaker
OID	Object IDentifier
Opto	An Optically coupled logic input. Alternative terminology: binary input.
OSI	Open Systems Interconnection
PCB	Printed Circuit Board
PCT	Protective Conductor Terminal (Ground)
PDC	Phasor Data Concentrator
Ph	Phase - used in distance settings to identify settings that relate to phase-phase faults.
PICS	Protocol Implementation Conformance Statement
PMU	Phasor Measurement Unit
PNG	Portable Network Graphics – a file format for a computer graphic
Pol	Polarize - typically the polarizing voltage used in making directional decisions.
POR	A Permissive OverReaching transfer trip scheme (alternative terminology: POTT).
PRP	Parallel Redundancy Protocol
PSB	Power Swing Blocking, to detect power swing/out of step functions (ANSI 78).
PSL	Programmable Scheme Logic: The part of the relay’s logic configuration that can be modified by the user, using the graphical editor within MiCOM S1 Studio software.
PSlip	A Pole slip (out of step - OOS) element: could be labeled 78 in ANSI terminology.
PT	Power Transformer
PTP	Precision Time Protocol
PUR	A Permissive UnderReaching transfer trip scheme (alternative terminology: PUTT).
Q	Quantity defined as per unit value
R	Resistance
R&TTE	Radio and Telecommunications Terminal Equipment

Term	Description
RBAC	Role Based Access Control
RCA	Relay Characteristic Angle - The center of the directional characteristic.
REB	Redundant Ethernet Board
REF	Restricted Earth Fault
Rev.	Indicates an element responding to a flow in the “reverse” direction
RMS / rms	Root mean square. The equivalent a.c. current: Taking into account the fundamental, plus the equivalent heating effect of any harmonics.
RP	Rear Port: The communication ports on the rear of the IED
RS232	A common serial communications standard defined by the EIA
RS485	A common serial communications standard defined by the EIA (multi-drop)
RST or Rst	Reset generally used in the context of reset functions in circuit breaker control.
RSTP	Rapid Spanning Tree Protocol
RTD	Resistance Temperature Device
RTU	Remote Terminal Unit
Rx	Receive: Typically used to indicate a communication transmit line/pin.
SBS	Straight Binary Second
SC	Synch-Check or system Synchronism Check.
SCADA	Supervisory Control and Data Acquisition
SCL	Substation Configuration Language
SCU	Substation Control Unit
SEF	Sensitive Earth Fault Protection
Sen	Sensitive
SHM	Self-Healing Manager
SHP	Self Healing Protocol
SIR	Source Impedance Ratio
SLA	Service Level Agreement
SMV	Sampled Measured Values
SNTP	Simple Network Time Protocol
SOA	Service Oriented Architecture
SOAP	Simple Object Access Protocol
SOC	Second of Century
SOTF	Switch on to Fault protection. Modified protection on manual closure of the circuit breaker.
SP	Single pole.
SPAR	Single pole auto-reclose.
SPC	Single Point Controllable
SPDT	Single Pole Dead Time. The dead time used in single pole auto-reclose cycles.
SPS	Single Point Status
SQRT	Square Root
SSL	Source Impedance Ratio
STP	Shielded Twisted Pair or Spanning Tree Protocol
SV	Sampled Values
SVC	Sampled Value Model
SVM	Sampled Value Model

Term	Description
TAF	Turbine Abnormal Frequency
TCP	Transmission Control Protocol
TCS	Second of Century
TCS	Trip Circuit Supervision
TD	Time Dial. The time dial multiplier setting: Applied to inverse-time curves (ANSI/IEEE).
TE	Unit for case measurements: One inch = 5TE units
THD	Total Harmonic Distortion
TICS	Technical Issues Conformance Statement
TIFF	Tagged Image File Format – a file format for a computer graphic
TLS	Transport Layer Security protocol
TMS	Time Multiplier Setting: Applied to inverse-time curves (IEC)
TOC	Trip On Close (“line check”) protection. Offers SOTF and TOR functionality.
TOR	Trip On Reclose protection. Modified protection on autoreclosure of the circuit breaker.
TP	Two-Part
TUC	Timed UnderCurrent
TVE	Total Vector Error
Tx	Transmit
UDP	User Datagram Protocol
UL	Underwriters Laboratory
UPCT	User Programmable Curve Tool
UTC	Universal Time Coordinated
V	Voltage
VA	Phase A voltage: Sometimes L1, or red phase
VB	Phase B voltage: Sometimes L2, or yellow phase
VC	Phase C voltage: Sometimes L3, or blue phase
VCO	Voltage Controlled Overcurrent element
VDEP OC>	A voltage dependent overcurrent element: could be a voltage controlled or voltage restrained overcurrent element and could be labeled 51V in ANSI terminology.
VDR	Voltage Dependant Resistor
V/Hz	An overfluxing element, flux is proportional to voltage/frequency: could be labeled 24 in ANSI terminology.
Vk	IEC knee point voltage of a current transformer.
VT	Voltage Transformer
VTS	Voltage Transformer Supervision: To detect VT input failure.
WAN	Wide Area Network
Xformer	Transformer
XML	Extensible Markup Language
XSD	XML Schema Definition

Table 1 - Acronyms and abbreviations

2 COMPANY PROPRIETARY TERMS

Symbol	Description
Courier	Schneider Electric's proprietary SCADA communications protocol
Metrosil	Brand of non-linear resistor produced by M&I Materials Ltd.
MiCOM	Schneider Electric's brand of protection relays

Table 2 - Company-proprietary terms

3 ANSI TERMS

ANSI no.	Description
3PAR	Three pole auto-reclose.
3PDT	Three pole dead time. The dead time used in three pole auto-reclose cycles.
52a	A circuit breaker closed auxiliary contact: The contact is in the same state as the breaker primary contacts
52b	A circuit breaker open auxiliary contact: The contact is in the opposite state to the breaker primary contacts
64R	Rotor earth fault protection
64S	100% stator earth (ground) fault protection using a low frequency injection method.

Table 3 - ANSI abbreviations

ANSI no.	Function	Description
Current Protection Functions		
50/51	Phase overcurrent	Three-phase protection against overloads and phase-to-phase short-circuits.
50N/51N	Earth fault	Earth fault protection based on measured or calculated residual current values: • 50N/51N: residual current calculated or measured by 3 phase current sensors
50G/51G	Sensitive earth fault	Sensitive earth fault protection based on measured residual current values: • 50G/51G: residual current measured directly by a specific sensor such as a core balance CT
50BF	Breaker failure	If a breaker fails to be triggered by a tripping order, as detected by the non-extinction of the fault current, this backup protection sends a tripping order to the upstream or adjacent breakers.
46	Negative sequence / unbalance	Protection against phase unbalance, detected by the measurement of negative sequence current: • sensitive protection to detect 2-phase faults at the ends of long lines • protection of equipment against temperature build-up, caused by an unbalanced power supply, phase inversion or loss of phase, and against phase current unbalance
46BC	Broken conductor protection	Protection against phase imbalance, detected by measurement of I2/I1.
49RMS	Thermal overload	Protection against thermal damage caused by overloads on machines (transformers, motors or generators). The thermal capacity used is calculated according to a mathematical model which takes into account: • current RMS values • ambient temperature • negative sequence current, a cause of motor rotor temperature rise
Re-Closer		
79	Recloser	Automation device used to limit down time after tripping due to transient or semipermanent faults on overhead lines. The recloser orders automatic reclosing of the breaking device after the time delay required to restore the insulation has elapsed. Recloser operation is easy to adapt for different operating modes by parameter setting.
Directional Current Protection		
67N/67NC type 1 and 67	Directional phase overcurrent	Phase-to-phase short-circuit protection, with selective tripping according to fault current direction. It comprises a phase overcurrent function associated with direction detection, and picks up if the phase overcurrent function in the chosen direction (line or busbar) is activated for at least one of the three phases.

ANSI no.	Function	Description
67N/67NC	Directional earth fault	Earth fault protection, with selective tripping according to fault current direction. Three types of operation: • Type 1: the protection function uses the projection of the I0 vector • Type 2: the protection function uses the I0 vector magnitude with half-plane tripping zone • Type 3: the protection function uses the I0 vector magnitude with angular sector tripping zone
67N/67NC type 1	Directional current protection	Directional earth fault protection for impedant, isolated or compensated neutral systems, based on the projection of measured residual current.
67N/67NC type 2	Directional current protection	Directional overcurrent protection for impedance and solidly earthed systems, based on measured or calculated residual current. It comprises an earth fault function associated with direction detection, and picks up if the earth fault function in the chosen direction (line or busbar) is activated.
67N/67NC type 3	Directional current protection	Directional overcurrent protection for distribution networks in which the neutral earthing system varies according to the operating mode, based on measured residual current. It comprises an earth fault function associated with direction detection (angular sector tripping zone defined by 2 adjustable angles), and picks up if the earth fault function in the chosen direction (line or busbar) is activated.
Directional Power Protection Functions		

32P	Directional active overpower	Two-way protection based on calculated active power, for the following applications:
		• active overpower protection to detect overloads and allow load shedding
		• reverse active power protection:
		  • against generators running like motors when the generators consume active power
		  • against motors running like generators when the motors supply active power

32Q/40	Directional reactive overpower	Two-way protection based on calculated reactive power to detect field loss on synchronous machines: • reactive overpower protection for motors which consume more reactive power with field loss • reverse reactive overpower protection for generators which consume reactive power with field loss.
Machine Protection Functions		
37	Phase undercurrent	Protection of pumps against the consequences of a loss of priming by the detection of motor no-load operation. It is sensitive to a minimum of current in phase 1, remains stable during breaker tripping and may be inhibited by a logic input.

48/51LR/14	Locked rotor / excessive starting time	Protection of motors against overheating caused by:
		• excessive motor starting time due to overloads (e.g. conveyor) or insufficient supply voltage.
		The reacceleration of a motor that is not shut down, indicated by a logic input, may be considered as starting.
		• locked rotor due to motor load (e.g. crusher):
		  • in normal operation, after a normal start
		  • directly upon starting, before the detection of excessive starting time, with detection of locked rotor by a zero speed detector connected to a logic input, or by the underspeed function.

66	Starts per hour	Protection against motor overheating caused by:
		• too frequent starts: motor energizing is inhibited when the maximum allowable number of starts is reached, after counting of:
		  • starts per hour (or adjustable period)
		  • consecutive motor hot or cold starts (reacceleration of a motor that is not shut down, indicated by a logic input, may be counted as a start)
		• starts too close together in time: motor re-energizing after a shutdown is only allowed after an adjustable waiting time.

ANSI no.	Function	Description
50V/51V	Voltage-restrained overcurrent	Phase-to-phase short-circuit protection, for generators. The current tripping set point is voltage-adjusted in order to be sensitive to faults close to the generator which cause voltage drops and lowers the short-circuit current.
26/63	Thermostat/Buchholz	Protection of transformers against temperature rise and internal faults via logic inputs linked to devices integrated in the transformer.
38/49T	Temperature monitoring	Protection that detects abnormal temperature build-up by measuring the temperature inside equipment fitted with sensors: • transformer: protection of primary and secondary windings • motor and generator: protection of stator windings and bearings.
Voltage Protection Functions		
27D	Positive sequence undervoltage	Protection of motors against faulty operation due to insufficient or unbalanced network voltage, and detection of reverse rotation direction.
27R	Remanent undervoltage	Protection used to check that remanent voltage sustained by rotating machines has been cleared before allowing the busbar supplying the machines to be re-energized, to avoid electrical and mechanical transients.
27	Undervoltage	Protection of motors against voltage sags or detection of abnormally low network voltage to trigger automatic load shedding or source transfer. Works with phase-to-phase voltage.
59	Overvoltage	Detection of abnormally high network voltage or checking for sufficient voltage to enable source transfer. Works with phase-to-phase or phase-to-neutral voltage, each voltage being monitored separately.
59N	Neutral voltage displacement	Detection of insulation faults by measuring residual voltage in isolated neutral systems.
47	Negative sequence overvoltage	Protection against phase unbalance resulting from phase inversion, unbalanced supply or distant fault, detected by the measurement of negative sequence voltage.
Frequency Protection Functions		
81O	Overfrequency	Detection of abnormally high frequency compared to the rated frequency, to monitor power supply quality. Other organizations may use 81H instead of 81O.
81U	Underfrequency	Detection of abnormally low frequency compared to the rated frequency, to monitor power supply quality. The protection may be used for overall tripping or load shedding. Protection stability is ensured in the event of the loss of the main source and presence of remanent voltage by a restraint in the event of a continuous decrease of the frequency, which is activated by parameter setting. Other organizations may use 81L instead of 81U.
81R	Rate of change of frequency	Protection function used for fast disconnection of a generator or load shedding control. Based on the calculation of the frequency variation, it is insensitive to transient voltage disturbances and therefore more stable than a phase-shift protection function. **Disconnection** In installations with autonomous production means connected to a utility, the “rate of change of frequency” protection function is used to detect loss of the main system in view of opening the incoming circuit breaker to: • protect the generators from a reconnection without checking synchronization • avoid supplying loads outside the installation. **Load shedding** The “rate of change of frequency” protection function is used for load shedding in combination with the underfrequency protection to: • either accelerate shedding in the event of a large overload • or inhibit shedding following a sudden drop in frequency due to a problem that should not be solved by shedding.
Dynamic Line Rating (DLR) Protection Functions		

ANSI no.	Function	Description
49DLR	Dynamic line rating (DLR)	Protection of overhead lines based on calculation of rating or ampacity to dynamically take into account the effect of prevailing weather conditions as monitored by external sensors for: • Ambient Temperature • Wind Velocity • Wind Direction • Solar Radiation

Table 4 - ANSI descriptions

4 CONCATENATED TERMS

Term
Undercurrent
Overcurrent
Overfrequency
Underfrequency
Undervoltage
Overvoltage

Table 5 - Concatenated terms

5 UNITS FOR DIGITAL COMMUNICATIONS

Unit	Description
b	bit
B	Byte
kb	Kilobit(s)
kbps	Kilobits per second
kB	Kilobyte(s)
Mb	Megabit(s)
Mbps	Megabits per second
MB	Megabyte(s)
Gb	Gigabit(s)
Gbps	Gigabits per second
GB	Gigabyte(s)
Tb	Terabit(s)
Tbps	Terabits per second
TB	Terabyte(s)

Table 6 - Units for digital communications

6 AMERICAN VS BRITISH ENGLISH TERMINOLOGY

British English	American English
…ae…	…e…
…ence	…ense
…ise	…ize
…oe…	…e…
…ogue	…og
…our	…or
…ourite	…orite
…que	…ck
…re	…er
…yse	…yze
Aluminium	Aluminum
Centre	Center
Earth	Ground
Fibre	Fiber
Ground	Earth
Speciality	Specialty

Table 7 - American vs British English terminology

7 LOGIC SYMBOLS AND TERMS

Symbol	Description	Units
&	Logical “AND”: Used in logic diagrams to show an AND-gate function.	
Σ	“Sigma”: Used to indicate a summation, such as cumulative current interrupted.	
τ	“Tau”: Used to indicate a time constant, often associated with thermal characteristics.	
ω	System angular frequency	rad
<	Less than: Used to indicate an “under” threshold, such as undercurrent (current dropout).	
>	Greater than: Used to indicate an “over” threshold, such as overcurrent (current overload)	
o	A small circle on the input or output of a logic gate: Indicates a NOT (invert) function.	
1	Logical “OR”: Used in logic diagrams to show an OR-gate function.	
ABC	Clockwise phase rotation.	
ACB	Anti-Clockwise phase rotation.	
C	Capacitance	A
df/dt	Rate of Change of Frequency protection	Hz/s
df/dt>1	First stage of df/dt protection	Hz/s
F<	Underfrequency protection: Could be labeled 81-U in ANSI terminology.	Hz
F>	Overfrequency protection: Could be labeled 81-O in ANSI terminology.	Hz
F<1	First stage of under frequency protection: Could be labeled 81-U in ANSI terminology.	Hz
F>1	First stage of over frequency protection: Could be labeled 81-O in ANSI terminology.	Hz
f_{max}	Maximum required operating frequency	Hz
f_{min}	Minimum required operating frequency	Hz
f_n	Nominal operating frequency	Hz
I	Current	A
I∧	Current raised to a power: Such as when breaker statistics monitor the square of ruptured current squared (∧ power = 2).	An
I’f	Maximum internal secondary fault current (may also be expressed as a multiple of In)	A
I<	An undercurrent element: Responds to current dropout.	A
I>>	Current setting of short circuit element	In
I>	A phase overcurrent protection: Could be labeled 50/51 in ANSI terminology.	A
I>1	First stage of phase overcurrent protection: Could be labeled 51-1 in ANSI terminology.	A
I>2	Second stage of phase overcurrent protection: Could be labeled 51-2 in ANSI terminology.	A
I>3	Third stage of phase overcurrent protection: Could be labeled 51-3 in ANSI terminology.	A
I>4	Fourth stage of phase overcurrent protection: Could be labeled 51-4 in ANSI terminology.	A
I0	Earth fault current setting Zero sequence current: Equals one third of the measured neutral/residual current.	A
I1	Positive sequence current.	A
I2	Negative sequence current.	A
I2>	Negative sequence overcurrent protection (NPS element).	A
I2pol	Negative sequence polarizing current.	A
I2therm>	A negative sequence thermal element: Could be labeled 46T in ANSI terminology.	
IA	Phase A current: Might be phase L1, red phase.. or other, in customer terminology.	A
IB	Phase B current: Might be phase L2, yellow phase.. or other, in customer terminology.	A
IC	Phase C current: Might be phase L3, blue phase.. or other, in customer terminology.	A
Idiff	Current setting of biased differential element	A

Symbol	Description	Units
If	Maximum secondary through-fault current	A
If max	Maximum secondary fault current (same for all feeders)	A
If max int	Maximum secondary contribution from a feeder to an internal fault	A
If Z1	Maximum secondary phase fault current at Zone 1 reach point	A
Ife	Maximum secondary through fault earth current	A
IfeZ1	Maximum secondary earth fault current at Zone 1 reach point	A
Ifn	Maximum prospective secondary earth fault current or 31 x I> setting (whichever is lowest)	A
Ifp	Maximum prospective secondary phase fault current or 31 x I> setting (whichever is lowest)	A
I_m	Mutual current	A
IM64	InterMiCOM64.	
IMx	InterMiCOM64 bit (x=1 to 16)	
I_n	Current transformer nominal secondary current. The rated nominal current of the relay: Software selectable as 1 amp or 5 amp to match the line CT input.	A
IN	Neutral current, or residual current: This results from an internal summation of the three measured phase currents.	A
IN>	A neutral (residual) overcurrent element: Detects earth/ground faults.	A
IN>1	First stage of ground overcurrent protection: Could be labeled 51N-1 in ANSI terminology.	A
IN>2	Second stage of ground overcurrent protection: Could be labeled 51N-2 in ANSI terminology.	A
Inst	An element with “instantaneous” operation: i.e. having no deliberate time delay.	
I/O	Inputs and Outputs - used in connection with the number of optocoupled inputs and output contacts within the relay.	
I/P	Input	
Iref	Reference current of P63x calculated from the reference power and nominal voltage	A
IREF>	A Restricted Earth Fault overcurrent element: Detects earth (ground) faults. Could be labeled 64 in ANSI terminology.	A
IRm2	Second knee-point bias current threshold setting of P63x biased differential element	A
Is	Value of stabilizing current	A
IS1	Differential current pick-up setting of biased differential element	A
IS2	Bias current threshold setting of biased differential element	A
I_{SEF}>	Sensitive earth fault overcurrent element.	A
Isn	Rated secondary current (I secondary nominal)	A
Isp	Stage 2 and 3 setting	A
Ist	Motor start up current referred to CT secondary side	A
K	Dimensioning factor	
K_1	Lower bias slope setting of biased differential element	%
K_2	Higher bias slope setting of biased differential element	%
K_e	Dimensioning factor for earth fault	
km	Distance in kilometers	
K_{max}	Maximum dimensioning factor	
K_{rpa}	Dimensioning factor for reach point accuracy	
K_s	Dimensioning factor dependent upon through fault current	
K_{ssc}	Short circuit current coefficient or ALF	
K_t	Dimensioning factor dependent upon operating time	
kZm	The mutual compensation factor (mutual compensation of distance elements and fault locator for parallel line coupling effects).	

Symbol	Description	Units
kZN	The residual compensation factor: Ensuring correct reach for ground distance elements.	
L	Inductance	A
m1	Lower bias slope setting of P63x biased differential element	None
m2	Higher bias slope setting of P63x biased differential element	None
mi	Distance in miles.	
N	Indication of “Neutral” involvement in a fault: i.e. a ground (earth) fault.	
-P>	A reverse power (W) element: could be labeled 32R in ANSI terminology.	
P>	An overpower (W) element: could be labeled 32O in ANSI terminology.	
P<	A low forward power (W) element: could be labeled 32L in ANSI terminology.	
P1	Used in IEC terminology to identify the primary CT terminal polarity: Replace by a dot when using ANSI standards.	
P2	Used in IEC terminology to identify the primary CT terminal polarity: The non-dot terminal.	
P_n	Rotating plant rated single phase power	W
PN>	Wattmetric earth fault protection: Calculated using residual voltage and current quantities.	
Q<	A reactive under power (VAr) element	
R	Resistance (Ω)	Ω
R< or 64S R<	A 100% stator earth (ground) fault via low frequency injection under resistance element: could be labeled 64S in ANSI terminology.	
R Gnd.	A distance zone resistive reach setting: Used for ground (earth) faults.	
R Ph	A distance zone resistive reach setting used for Phase-Phase faults.	
Rct	Secondary winding resistance	Ω
Rl	Resistance of single lead from relay to current transformer	Ω
Rr	Resistance of any other protective relays sharing the current transformer	Ω
Rrn	Resistance of relay neutral current input	Ω
Rrp	Resistance of relay phase current input	Ω
Rs	Value of stabilizing resistor	Ω
Rx	Receive: typically used to indicate a communication receive line/pin.	
S<	An apparent under power (VA) element	
S1	Used in IEC terminology to identify the secondary CT terminal polarity: Replace by a dot when using ANSI standards.	
S2	Used in IEC terminology to identify the secondary CT terminal polarity: The non-dot terminal. Also used to signify negative sequence apparent power, S2 = V2 x I2.	
S2>	A negative sequence apparent power element, S2 = V2 x I2.	
t	A time delay.	
t’	Duration of first current flow during auto-reclose cycle	s
T1	Primary system time constant	s
TF	Through Fault monitoring	
tfr	Auto-reclose dead time	s
Thermal I>	A stator thermal overload element: could be labeled 49 in ANSI terminology.	
Thru/TF	Through Fault monitoring	
tIdiff	Current differential operating time	s
Ts	Secondary system time constant	s
Tx	Transmit: typically used to indicate a communication transmit line/pin.	
V	Voltage.	V
V<	An undervoltage element: could be labeled 27 in ANSI terminology	V

Symbol	Description	Units
V<1	First stage of undervoltage protection: Could be labeled 27-1 in ANSI terminology.	V
V<2	Second stage of undervoltage protection: Could be labeled 27-2 in ANSI terminology.	V
V>	An overvoltage element: could be labeled 59 in ANSI terminology	V
V>1	First stage of overvoltage protection: Could be labeled 59-1 in ANSI terminology.	V
V>2	Second stage of overvoltage protection: Could be labeled 59-2 in ANSI terminology.	V
V0	Zero sequence voltage: Equals one third of the measured neutral/residual voltage.	V
V1	Positive sequence voltage.	V
V2	Negative sequence voltage.	V
V2>	A negative phase sequence (NPS) overvoltage element: could be labeled 47 in ANSI terminology.	
$V2_{pol}$	Negative sequence polarizing voltage.	V
V_A	Phase A voltage: Might be phase L1, red phase.. or other, in customer terminology.	V
V_B	Phase B voltage: Might be phase L2, yellow phase.. or other, in customer terminology.	V
V_C	Phase C voltage: Might be phase L3, blue phase.. or other, in customer terminology.	V
Vf	Theoretical maximum voltage produced if CT saturation did not occur	V
Vin	Input voltage e.g. to an opto-input	V
V_k	Required CT knee-point voltage. IEC knee point voltage of a current transformer.	V
VN	Neutral voltage displacement, or residual voltage.	V
VN>	A residual (neutral) overvoltage element: could be labeled 59N in ANSI terminology.	V
V_n	Nominal voltage	V
Vn	The rated nominal voltage of the relay: To match the line VT input.	V
VN>1	First stage of residual (neutral) overvoltage protection.	V
VN>2	Second stage of residual (neutral) overvoltage protection.	V
VN3H>	A 100% stator earth (ground) fault 3rd harmonic residual (neutral) overvoltage element: could be labeled 59TN in ANSI terminology.	
VN3H<	A 100% stator earth (ground) fault 3rd harmonic residual (neutral) undervoltage element: could be labeled 27TN in ANSI terminology.	
Vres.	Neutral voltage displacement, or residual voltage.	V
Vs	Value of stabilizing voltage	V
V_x	An auxiliary supply voltage: Typically the substation battery voltage used to power the relay.	V
WI	Weak Infeed logic used in teleprotection schemes.	
X	Reactance	None
X/R	Primary system reactance/resistance ratio	None
Xe/Re	Primary system reactance/resistance ratio for earth loop	None
Xt	Transformer reactance (per unit)	p.u.
Y	Admittance	p.u.
Z	Impedance	p.u.
Z<	An under impedance element: could be labeled 21 in ANSI terminology.	
Z0	Zero sequence impedance.	
Z1	Positive sequence impedance.	
Z1	Zone 1 distance protection.	
Z1X	Reach-stepped Zone 1X, for zone extension schemes used with auto-reclosure.	
Z2	Negative sequence impedance.	
Z2	Zone 2 distance protection.	
ZP	Programmable distance zone that can be set forward or reverse looking.	

Symbol	Description	Units
Zs	Used to signify the source impedance behind the relay location.	
Φal	Accuracy limit flux	Wb
Ψr	Remanent flux	Wb
Ψs	Saturation flux	Wb

Table 8 - Logic Symbols and Terms

8 LOGIC TIMERS

Logic symbols	Explanation	Time chart
t / 0	Delay on pick-up timer, t	INPUT, OUTPUT, INPUT, OUTPUT; t, t
0 / t	Delay on drop-off timer, t	INPUT, OUTPUT, INPUT, OUTPUT; t, t
t1 / t2	Delay on pick-up/drop-off timer	INPUT, OUTPUT, INPUT, OUTPUT; t1, t2, t1, t2
t	Pulse timer	INPUT, OUTPUT, INPUT, OUTPUT; t, t
t	Pulse pick-up falling edge	INPUT, OUTPUT; t
t	Pulse pick-up raising edge	INPUT, OUTPUT; t

Logic symbols	Explanation	Time chart
Latching	Latch	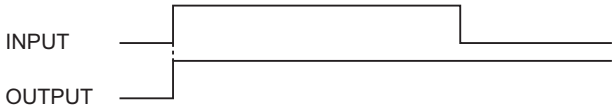
Dwell Timer	Dwell timer	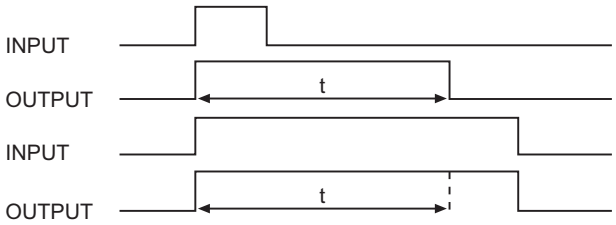
Straight	**Straight (non latching):** Hold value until input reset signal	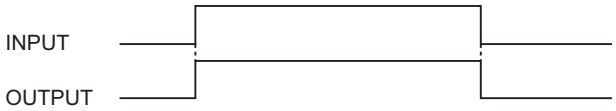

Table 9 - Logic Timers

9 LOGIC GATES

AND GATE

Symbol

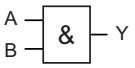

Truth Table

IN		OUT
0	1	0
0	1	0
0	1	0
1	0	0
1	1	1

Symbol

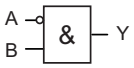

Truth Table

IN		OUT
A	B	Y
0	0	0
0	1	1
1	0	0
1	1	0

Symbol

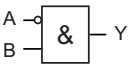

Truth Table

IN		OUT
A	B	Y
0	0	1
0	1	1
1	0	1
1	1	0

OR GATE

Symbol

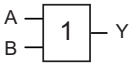

Truth Table

IN		OUT
A	B	Y
0	0	0
0	1	1
1	0	1
1	1	1

Symbol

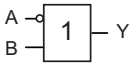

Truth Table

IN		OUT
A	B	Y
0	0	1
0	1	1
1	0	0
1	1	1

Symbol

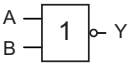

Truth Table

IN		OUT
A	B	Y
0	0	1
0	1	0
1	0	0
1	1	0

R - S FLIP-FLOP

Symbol

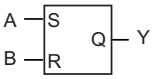

Truth Table

A	B	QN	QN+	Active Mode
0	0			Hold Mode
0	1	0		Hold Mode
		1	0	Reset
1	0	0	1	Set
		1		Hold Mode
0	0	-	-	Inhibit Mode

Symbol

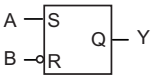

Truth Table

A	B	QN	QN+	Active Mode
0	0	0		Hold Mode
		1	0	Reset
0	1			Hold Mode
1	0	-	-	Inhibit Mode
0	1	0	1	Set
		1		Hold Mode

Symbol

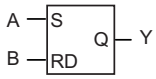

* RD = Reset Dominant

Truth Table

A	B	QN	QN+	Active Mode
0	0			Hold Mode
0	1			0
1	0	0	1	Set
		1		Hold Mode
1	1			0

EXCLUSIVE OR GATE

Symbol

Truth Table

IN		OUT
A	B	Y
0	0	0
0	1	1
1	0	1
1	1	0

Symbol

Truth Table

IN		OUT
A	B	Y
0	0	1
0	1	0
1	0	0
1	1	1

Symbol

Truth Table

IN		OUT
A	B	Y
0	0	1
0	1	0
1	0	0
1	1	1

MULTI INPUT GATE

Symbol

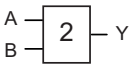

Truth Table

IN		OUT
A	B	Y
0	0	0
0	1	0
1	0	0
1	1	1

Symbol

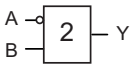

Truth Table

IN		OUT
A	B	Y
0	0	0
0	1	1
1	0	0
1	1	0

Symbol

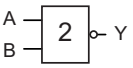

Truth Table

IN		OUT
A	B	Y
0	0	1
0	1	1
1	0	1
1	1	0

NOT GATE

Symbol

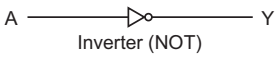

Inverter (NOT)

Truth Table

IN	OUT
A	Y
0	1
1	0

Figure 1 - Logic Gates

Notes:

INSTALLATION

CHAPTER 15

Date:	February 2012
Hardware Suffix:	J (P341)
Software Version:	36 and 71 (with DLR)
Connection Diagrams:	10P341xx (xx = 01 to 12)

CONTENTS

FIGURES

TABLES

1 INSTALLATION

1.1 Receipt of Relays

Protective relays, although generally of robust construction, require careful treatment prior to installation on site. On receipt, relays should be examined immediately to ensure no external damage has been sustained in transit. If damage has been sustained, a claim should be made to the transport contractor and Schneider Electric should be promptly notified.

Relays that are supplied unmounted and not intended for immediate installation should be returned to their protective polythene bags and delivery carton. Section 1.3 gives more information about the storage of relays.

1.2 Handling of Electronic Equipment

A person's normal movements can easily generate electrostatic potentials of several thousand volts. Discharge of these voltages into semiconductor devices when handling electronic circuits can cause serious damage that, although not always immediately apparent, will reduce the reliability of the circuit. This is particularly important to consider where the circuits use Complementary Metal Oxide Semiconductors (CMOS), as is the case with these relays.

The relay's electronic circuits are protected from electrostatic discharge when housed in the case. Do not expose them to risk by removing the front panel or Printed Circuit Boards (PCBs) unnecessarily.

Each PCB incorporates the highest practicable protection for its semiconductor devices. However, if it becomes necessary to remove a PCB, the following precautions should be taken to preserve the high reliability and long life for which the relay has been designed and manufactured.

1. Before removing a PCB, ensure that you are at the same electrostatic potential as the equipment by touching the case.
2. Handle analog input modules by the front panel, frame or edges of the circuit boards. PCBs should only be handled by their edges. Avoid touching the electronic components, printed circuit tracks or connectors.
3. Do not pass the module to another person without first ensuring you are both at the same electrostatic potential. Shaking hands achieves equipotential.
4. Place the module on an anti-static surface, or on a conducting surface that is at the same potential as yourself.
5. If it is necessary to store or transport PCBs removed from the case, place them individually in electrically conducting anti-static bags.

In the unlikely event that you are making measurements on the internal electronic circuitry of a relay in service, it is preferable that you are earthed to the case with a conductive wrist strap. Wrist straps should have a resistance to ground between 500 kΩ to 10 MΩ. If a wrist strap is not available you should maintain regular contact with the case to prevent a build-up of electrostatic potential. Instrumentation which may be used for making measurements should also be earthed to the case whenever possible.

More information on safe working procedures for all electronic equipment can be found in BS EN 100015: Part 1:1992. It is strongly recommended that detailed investigations on electronic circuitry or modification work should be carried out in a special handling area such as described in the aforementioned British Standard document.

1.3 Storage

If relays are not to be installed immediately upon receipt, they should be stored in a place free from dust and moisture in their original cartons. Where de-humidifier bags have been included in the packing they should be retained. The action of the de-humidifier crystals will be impaired if the bag is exposed to ambient conditions and may be restored by gently heating the bag for about an hour prior to replacing it in the carton.

To prevent battery drain during transportation and storage a battery isolation strip is fitted during manufacture. With the lower access cover open, presence of the battery isolation strip can be checked by a red tab protruding from the positive side.

Care should be taken on subsequent unpacking that any dust that has collected on the carton does not fall inside. In locations of high humidity the carton and packing may become impregnated with moisture and the de-humidifier crystals will lose their efficiency.

Prior to installation, relays should be stored at a temperature of between –25º to +70ºC (-13ºF to +158ºF).

1.4 Unpacking

Care must be taken when unpacking and installing the relays so that none of the parts are damaged and additional components are not accidentally left in the packing or lost. Ensure that any User's CDROM or technical documentation is NOT discarded - this should accompany the relay to its destination substation.

Note	*With the lower access cover open, the red tab of the battery isolation strip will be seen protruding from the positive side of the battery compartment. Do not remove this strip because it prevents battery drain during transportation and storage and will be removed as part of the commissioning tests.*

Relays must only be handled by skilled persons.

The site should be well lit to facilitate inspection, clean, dry and reasonably free from dust and excessive vibration. This particularly applies to installations that are being carried out at the same time as construction work.

2 RELAY MOUNTING

MiCOM relays are dispatched either individually or as part of a panel/rack assembly.

Individual relays are normally supplied with an outline diagram showing the dimensions for panel cut-outs and hole centers. This information can also be found in the product publication.

Secondary front covers can also be supplied as an option item to prevent unauthorized changing of settings and alarm status. They are available in sizes:

- 40TE (GN0037 001) and 60TE (GN0038 001) for P34xxxxxxxxxxA/B/C and
- 40TE (GN0242 001) and 60TE (GN0243 001) for P34xxxxxxxxxxJ/K

The design of the relay is such that the fixing holes in the mounting flanges are only accessible when the access covers are open and hidden from sight when the covers are closed.

If a P991 or MMLG test block is to be included, it is recommended that, when viewed from the front, it be positioned on the right-hand side of the relay (or relays) with which it is associated. This minimizes the wiring between the relay and test block, and allows the correct test block to be easily identified during commissioning and maintenance tests.

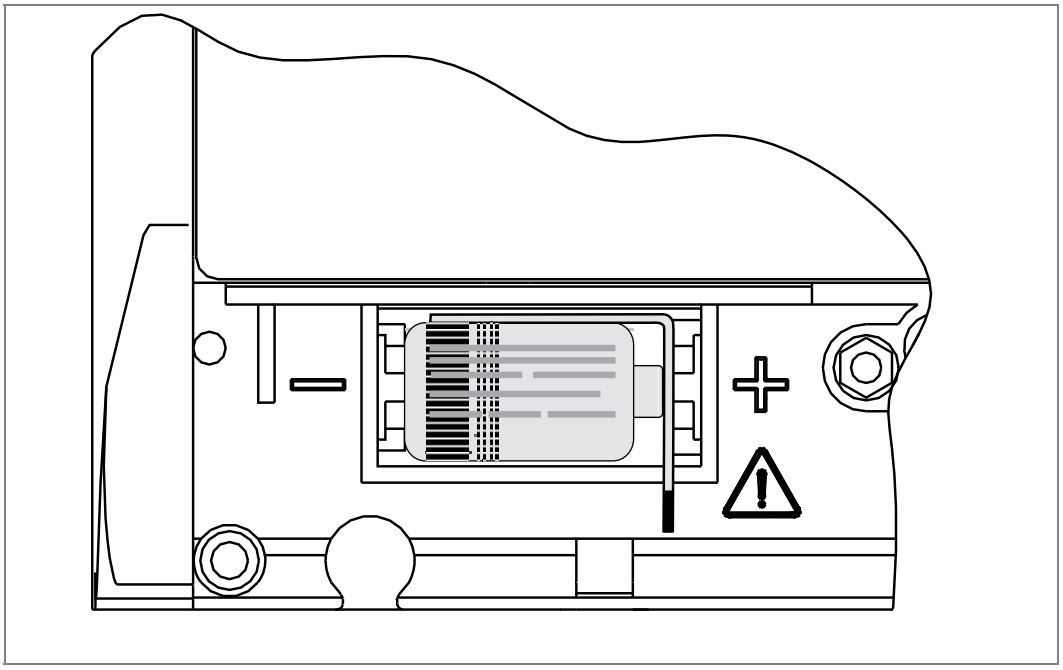

Figure 1 - Location of battery isolation strip

If it is necessary to test correct relay operation during the installation, the battery isolation strip can be removed but should be replaced if commissioning of the scheme is not imminent. This will prevent unnecessary battery drain during transportation to site and installation. The red tab of the isolation strip can be seen protruding from the positive side of the battery compartment when the lower access cover is open. To remove the isolation strip, pull the red tab whilst lightly pressing the battery to prevent it falling out of the compartment. When replacing the battery isolation strip, ensure that the strip is refitted as shown in Figure 1 that is with the strip behind the battery with the red tab protruding.

2.1 Rack Mounting

MiCOM relays may be rack mounted using single tier rack frames (our part number FX0021 101), as illustrated in Figure 2. These frames have been designed to have dimensions in accordance with IEC 60297 and are supplied pre-assembled ready to use. On a standard 483 mm rack system this enables combinations of widths of case up to a total equivalent of size 80TE to be mounted side by side.

The two horizontal rails of the rack frame have holes drilled at approximately 26 mm intervals and the relays are attached via their mounting flanges using M4 Taptite self-tapping screws with captive 3 mm thick washers (also known as a SEMS unit). These fastenings are available in packs of 5 (our part number ZA0005 104).

Note:	*Conventional self-tapping screws, including those supplied for mounting MiDOS relays, have marginally larger heads which can damage the front cover molding if used.*

Once the tier is complete, the frames are fastened into the racks using mounting angles at each end of the tier.

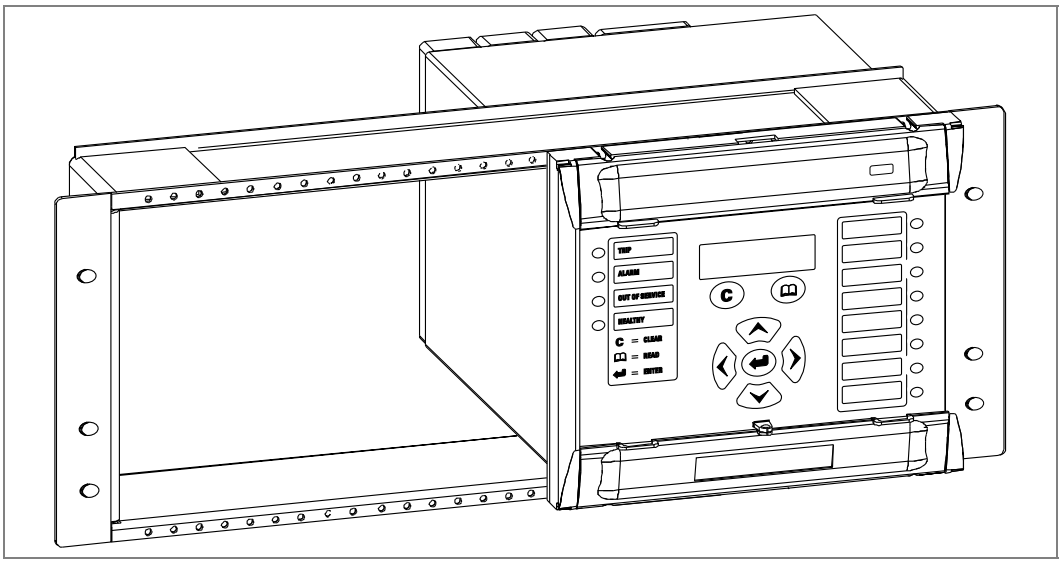

Figure 2 - Rack mounting of relays

Relays can be mechanically grouped into single tier (4U) or multi-tier arrangements by means of the rack frame. This enables schemes using products from the MiCOM and MiDOS product ranges to be pre-wired together prior to mounting.

Where the case size summation is less than 80TE on any tier, or space is to be left for installation of future relays, blanking plates may be used. These plates can also be used to mount ancillary components. Table 1 shows the sizes that can be ordered.

Note	*Blanking plates are only available in black.*

Further details on mounting MiDOS relays can be found in publication R7012, “MiDOS Parts Catalogue and Assembly Instructions”.

Case size summation	Blanking plate part number
5TE	GJ2028 101
10TE	GJ2028 102
15TE	GJ2028 103
20TE	GJ2028 104

Case size summation	Blanking plate part number
25TE	GJ2028 105
30TE	GJ2028 106
35TE	GJ2028 107
40TE	GJ2028 108

Table 1 - Blanking plates

2.2 Panel Mounting

The relays can be flush mounted into panels using M4 SEMS Taptite self-tapping screws with captive 3 mm thick washers (also known as a SEMS unit). These fastenings are available in packs of 5 (our part number ZA0005 104).

Note	*Conventional self-tapping screws, including those supplied for mounting MiDOS relays, have marginally larger heads which can damage the front cover molding if used.*

Alternatively tapped holes can be used if the panel has a minimum thickness of 2.5 mm.

For applications where relays need to be semi-projection or projection mounted, a range of collars are available. Further details can be obtained from the Contracts Department of Schneider Electric.

Where several relays are to be mounted in a single cut-out in the panel, it is advised that they are mechanically grouped together horizontally and/or vertically to form rigid assemblies prior to mounting in the panel.

Note	*Do not fasten the relays using pop rivets as this will not allow the relay to be easily removed from the panel in the future if repair is necessary.*

If it is required to mount a relay assembly on a panel complying to BS EN60529 IP52, it will be necessary to fit a metallic sealing strip between adjoining relays (Part no GN2044 001) and a sealing ring selected from Table 2 around the complete assembly.

Width	Single tier	Double tier
10TE	GJ9018 002	GJ9018 018
15TE	GJ9018 003	GJ9018 019
20TE	GJ9018 004	GJ9018 020
25TE	GJ9018 005	GJ9018 021
30TE	GJ9018 006	GJ9018 022
35TE	GJ9018 007	GJ9018 023
40TE	GJ9018 008	GJ9018 024
45TE	GJ9018 009	GJ9018 025
50TE	GJ9018 010	GJ9018 026
55TE	GJ9018 011	GJ9018 027
60TE	GJ9018 012	GJ9018 028

Table 2 - IP52 sealing rings

Further details on mounting MiDOS relays can be found in publication R7012, MiDOS Parts Catalogue and Assembly Instructions.

3 RELAY WIRING

This section serves as a guide to selecting the appropriate cable and connector type for each terminal on the relay.

Caution	**Before carrying out any work on the equipment the user should be familiar with the contents of the Safety Information section/Safety Guide SFTY/4LM/G11 or later issue and the ratings on the equipment's rating label.**

3.1 Medium and Heavy Duty Terminal Block Connections

Loose relays are supplied with sufficient M4 screws for making connections to the rear mounted terminal blocks using ring terminals, with a recommended maximum of two ring terminals per relay terminal.

If required, Schneider Electric can supply M4 90° crimp ring terminals in three different sizes depending on wire size (see Table 3). Each type is available in bags of 100.

Part number	Wire size	Insulation color
ZB9124 901	0.25 – 1.65 mm^2 (22 - 16 AWG)	Red
ZB9124 900	1.04 – 2.63 mm^2 (16 - 14 AWG)	Blue
ZB9124 904	2.53 – 6.64 mm^2 (12 - 10 AWG)	Uninsulated*

Note ** To maintain the terminal block insulation requirements for safety, an insulating sleeve should be fitted over the ring terminal after crimping.*

Table 3 - M4 90° crimp ring terminals

The following minimum wire sizes are recommended:

Current Transformers	2.5 mm^2
Auxiliary Supply, Vx	1.5 mm^2
EIA(RS)485 Port	See separate section
Other Circuits	1.0 mm^2

Due to the limitations of the ring terminal, the maximum wire size that can be used for any of the medium or heavy duty terminals is 6.0 mm^2 using ring terminals that are not pre-insulated. Where it is required to only use pre-insulated ring terminals, the maximum wire size that can be used is reduced to 2.63 mm^2 per ring terminal. If a larger wire size is required, two wires should be used in parallel, each terminated in a separate ring terminal at the relay.

The wire used for all connections to the medium and heavy duty terminal blocks, except the first rear EIA(RS)485 port and second rear EIA(RS)232/485 port, should have a minimum voltage rating of 300 Vrms.

It is recommended that the auxiliary supply wiring should be protected by a 16A High Rupture Capacity (HRC) fuse of type NIT or TIA. For safety reasons, current transformer circuits must never be fused. Other circuits should be appropriately fused to protect the wire used.

Each opto input has selectable filtering. This allows use of a pre-set filter of ½ cycle which renders the input immune to induced noise on the wiring: although this method is secure it can be slow, particularly for intertripping. This can be improved by switching off the ½ cycle filter in which case one of the following methods to reduce ac noise should be considered. The first method is to use double pole switching on the input, the second is

to use screened twisted cable on the input circuit. The recognition time of the opto inputs without the filtering is <2 ms and with the filtering is <12 ms.

3.2 EIA(RS)485 Port

Connections to the first rear EIA(RS)485 port are made using ring terminals. It is recommended that a 2-core screened cable be used with a maximum total length of 1000 m or 200 nF total cable capacitance.

A typical cable specification would be:

Each core:	16/0.2 mm copper conductors PVC insulated
Nominal conductor area:	0.5 mm^2 per core
Screen:	Overall braid, PVC sheathed

3.3 Ethernet Port for IEC 61850 (if applicable)

3.3.1 Fiber Optic (FO) Port

The relays can have 100 Mbps Ethernet port. Fiber Optic (FO) connection is recommended for use in permanent connections in a substation environment. The 100 Mbit port uses type ST connector, compatible with fiber multimode 50/125 µm or 62.5/125 µm – 13000 nm.

3.3.2 RJ-45 Metallic Port

The user can connect to either a 10Base-T or a 100Base-TX Ethernet hub; the port will automatically sense which type of hub is connected. Due to possibility of noise and interference on this part, it is recommended that this connection type be used for short-term connections and over short distance. Ideally where the relays and hubs are located in the same cubicle.

The connector for the Ethernet port is a shielded RJ-45. Table 4 shows the signals and pins on the connector.

Pin	Signal name	Signal definition
1	TXP	Transmit (positive)
2	TXN	Transmit (negative)
3	RXP	Receive (positive)
4	-	Not used
5	-	Not used
6	RXN	Receive (negative)
7	-	Not used
8	-	Not used

Table 4 - Signals on the Ethernet connector

3.4 Current Loop Input Output (CLIO) Connections (if applicable)

Where current loop inputs and outputs are available on a relay, the connections are made using screw clamp connectors, as per the RTD inputs, on the rear of the relay which can accept wire sizes between 0.1 mm^2 and 1.5 mm^2. It is recommended that connections between the relay and the current loop inputs and outputs are made using a screened cable. The wire should have a minimum voltage rating of 300 Vrms.

3.5 IRIG-B Connections (if applicable)

The IRIG-B input has a BNC connection. It is recommended that the cable and connector have a characteristic impedance of 50 Ω. It is also recommended that connections between the IRIG-B equipment and the relay are made using coaxial cable 50 Ω characteristic impedance with a halogen free, fire retardant sheath, type RG59LSF.

3.6 EIA(RS)232 Port

Short term connections to the EIA(RS)232 port, located behind the bottom access cover, can be made using a screened multi-core communication cable up to 15 m long, or a total capacitance of 2500 pF. The cable should be terminated at the relay end with a 9-way, metal shelled, D-type male plug. The Getting Started section of this manual details the pin allocations.

3.7 Download/Monitor Port

Short term connections to the download/monitor port, located behind the bottom access cover, can be made using a screened 25-core communication cable up to 4 m long. The cable should be terminated at the relay end with a 25-way, metal shelled, D-type male plug. The Getting Started section of this manual details and the Commissioning section of this manual details the pin allocations.

3.8 Second EIA(RS)232/485 Port

Relays with Courier, MODBUS, IEC 60870-5-103 or DNP3 protocol on the first rear communications port have the option of a second rear port, running Courier language. The second rear communications port can be used over one of three physical links: twisted pair K-Bus (non-polarity sensitive), twisted pair EIA(RS)485 (connection polarity sensitive) or EIA(RS)232. The EIA(RS)232 port is actually compliant to EIA(RS)574; the 9-pin version of EIA(RS)232, see www.tiaonline.org.

3.8.1 Connection to the Second Rear Port

The second rear Courier port connects via a 9-way female D-type connector (SK4) in the middle of the card end plate (in between IRIG-B connector and lower D-type). The connection is compliant to EIA(RS)574.

For IEC60870-5-2 over EIA(RS)232/574

Pin	Connection
1	No Connection
2	RxD
3	TxD
4	DTR#
5	Ground
6	No Connection
7	RTS#
8	CTS#
9	No Connection

Note # - These pins are control lines for use with a modem.

Table 5 - Second rear port RS232 connection

Connections to the second rear port configured for EIA(RS)232 operation can be made using a screened multi-core communication cable up to 15 m long, or a total capacitance of 2500 pF. The cable should be terminated at the relay end with a 9-way, metal shelled, D-type male plug. The table above details the pin allocations.

For K-bus or IEC60870-5-2 over EIA(RS)485

Pin*	Connection
4	EIA(RS)485 - 1 (+ ve)
7	EIA(RS)485 - 2 (- ve)

Note 1 ** - All other pins unconnected.*

Note 2 *Connector pins 4 and 7 are used by both the EIA(RS)232/574 and EIA(RS)485 physical layers, but for different purposes. Therefore, the cables should be removed during configuration switches.*

Note 3 *For the EIA(RS)485 protocol an EIA(RS)485 to EIA(RS)232/574 converter will be required to connect a modem or PC running S1, to the relay. An Schneider Electric CK222 is recommended.*

Note 4 *EIA(RS)485 is polarity sensitive, with pin 4 positive (+) and pin 7 negative (-).*

Note 5 *The K-Bus protocol can be connected to a PC via a KITZ101 or 102.*

Note 6 *It is recommended that a 2-core screened cable be used. To avoid exceeding the second communications port flash clearances it is recommended that the length of cable between the port and the communications equipment should be less than 300 m. This length can be increased to 1000 m or 200 nF total cable capacitance if the communications cable is not laid in close proximity to high current carrying conductors. The cable screen should be earthed at one end only.*

Table 6 - Second rear port RS485 connection

A typical cable specification would be:

Each core:	16/0.2 mm copper conductors PVC insulated
Nominal conductor area:	0.5 mm^2 per core
Screen:	Overall braid, PVC sheathed

3.9 Protective Conductor (Earth) Connection

Every relay must be connected to the local earth bar using the M4 earth studs in the bottom left hand corner of the relay case. The minimum recommended wire size is 2.5 mm^2 and should have a ring terminal at the relay end. Due to the limitations of the ring terminal, the maximum wire size that can be used for any of the medium or heavy duty terminals is 6.0 mm^2 per wire. If a greater cross-sectional area is required, two parallel connected wires, each terminated in a separate ring terminal at the relay, or a metal earth bar could be used.

Note *To prevent any possibility of electrolytic action between brass or copper earth conductors and the rear panel of the relay, precautions should be taken to isolate them from one another. This could be achieved in a number of ways, including placing a nickel-plated or insulating washer between the conductor and the relay case, or using tinned ring terminals.*

4 P341 CASE DIMENSIONS

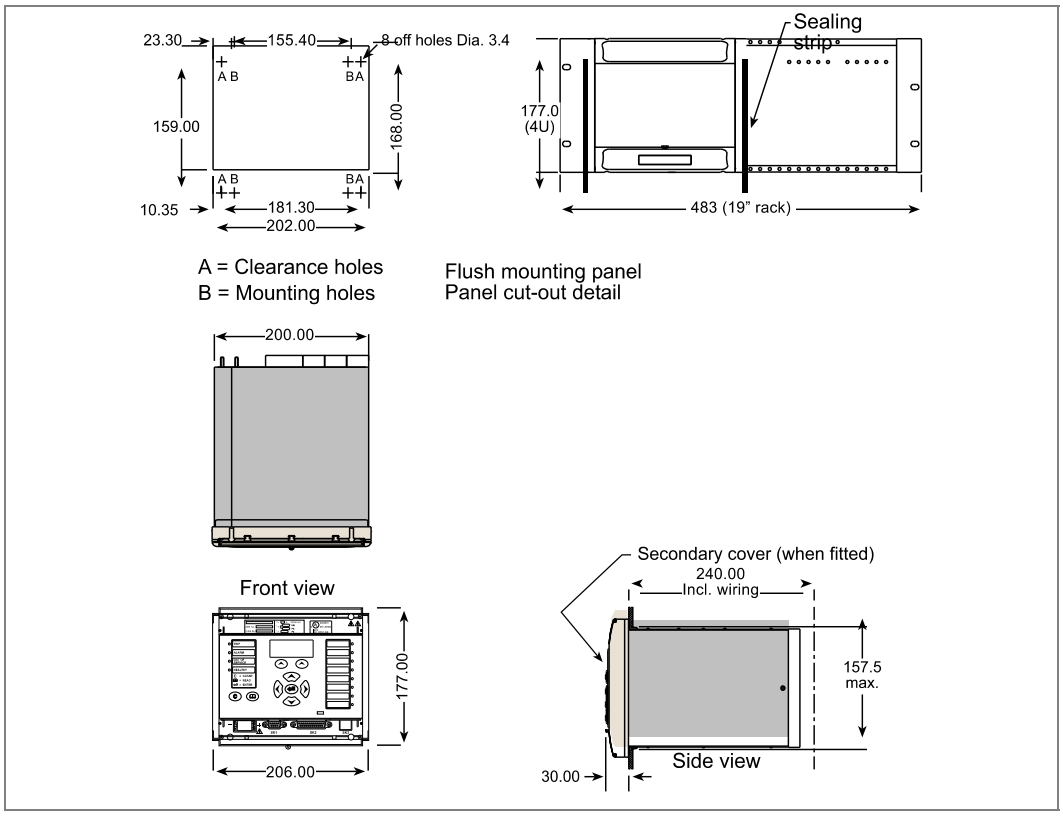

Figure 3 - P341 case dimensions (40TE case)

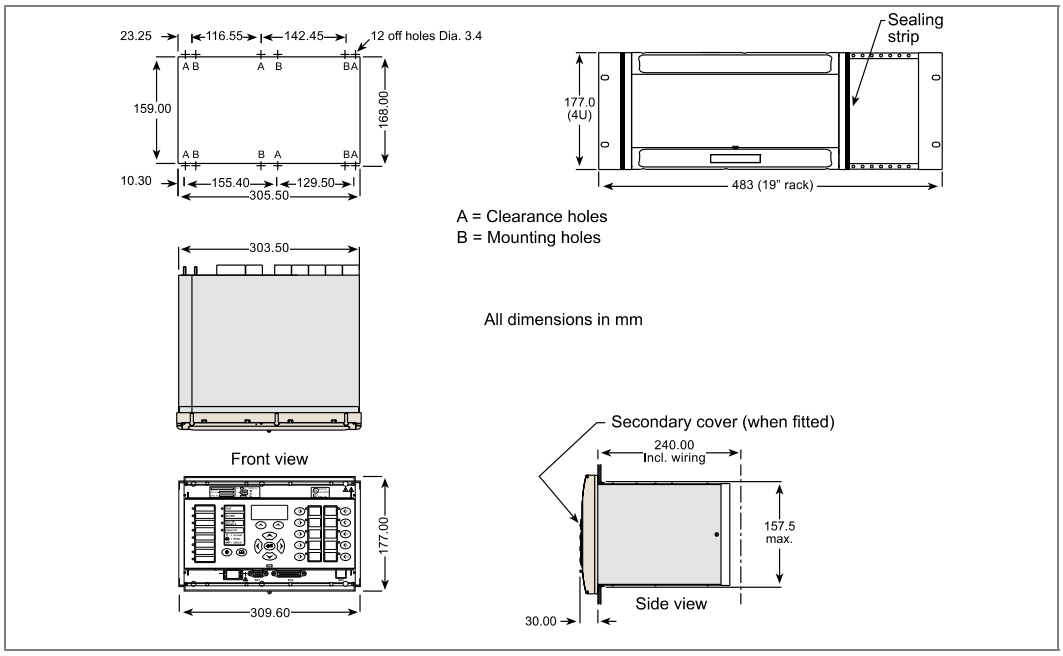

Figure 4 - P341 case dimensions (60TE case)

5 EXTERNAL CONNECTION DIAGRAMS

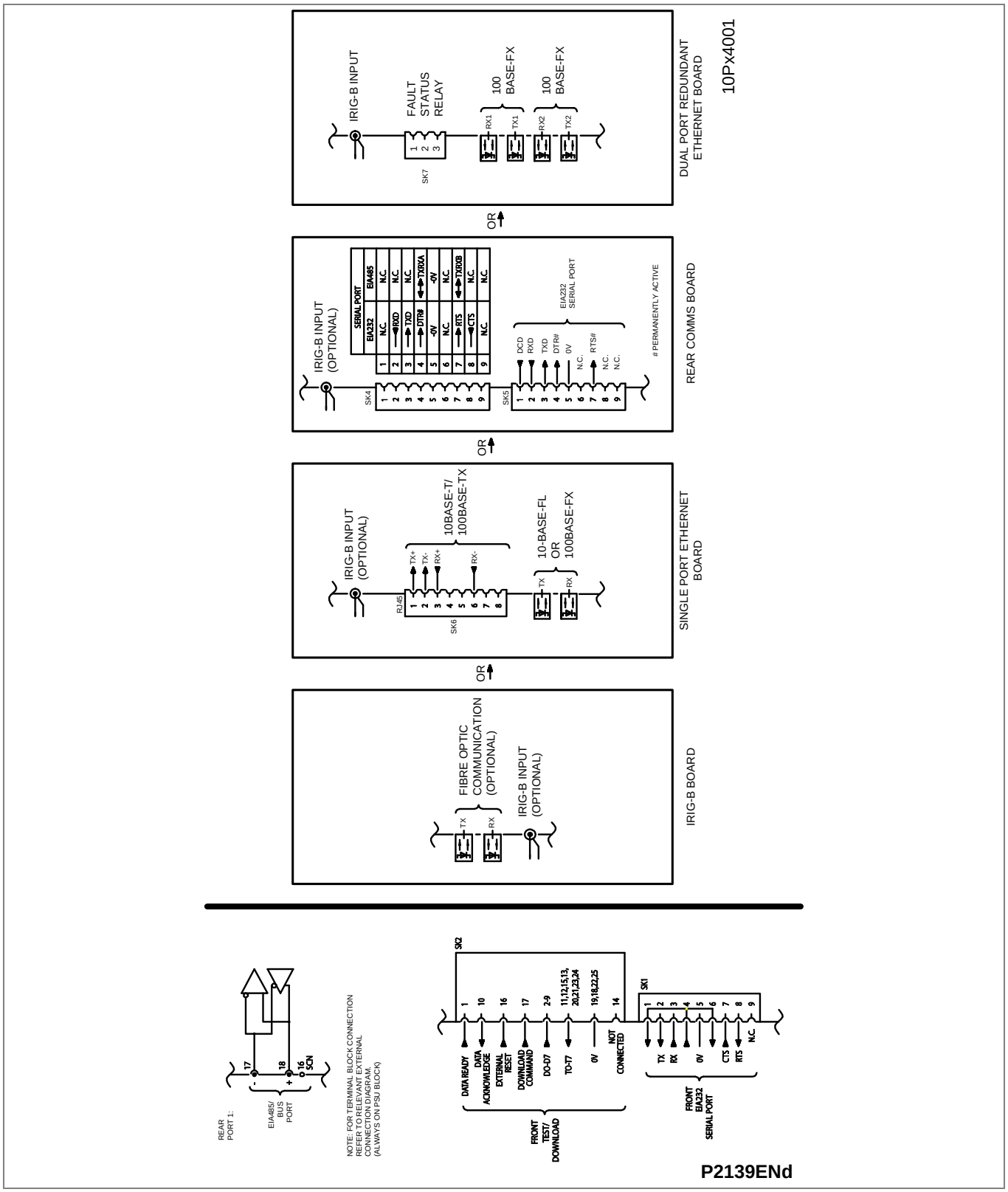

Figure 5 - Comms. options Px40 platform

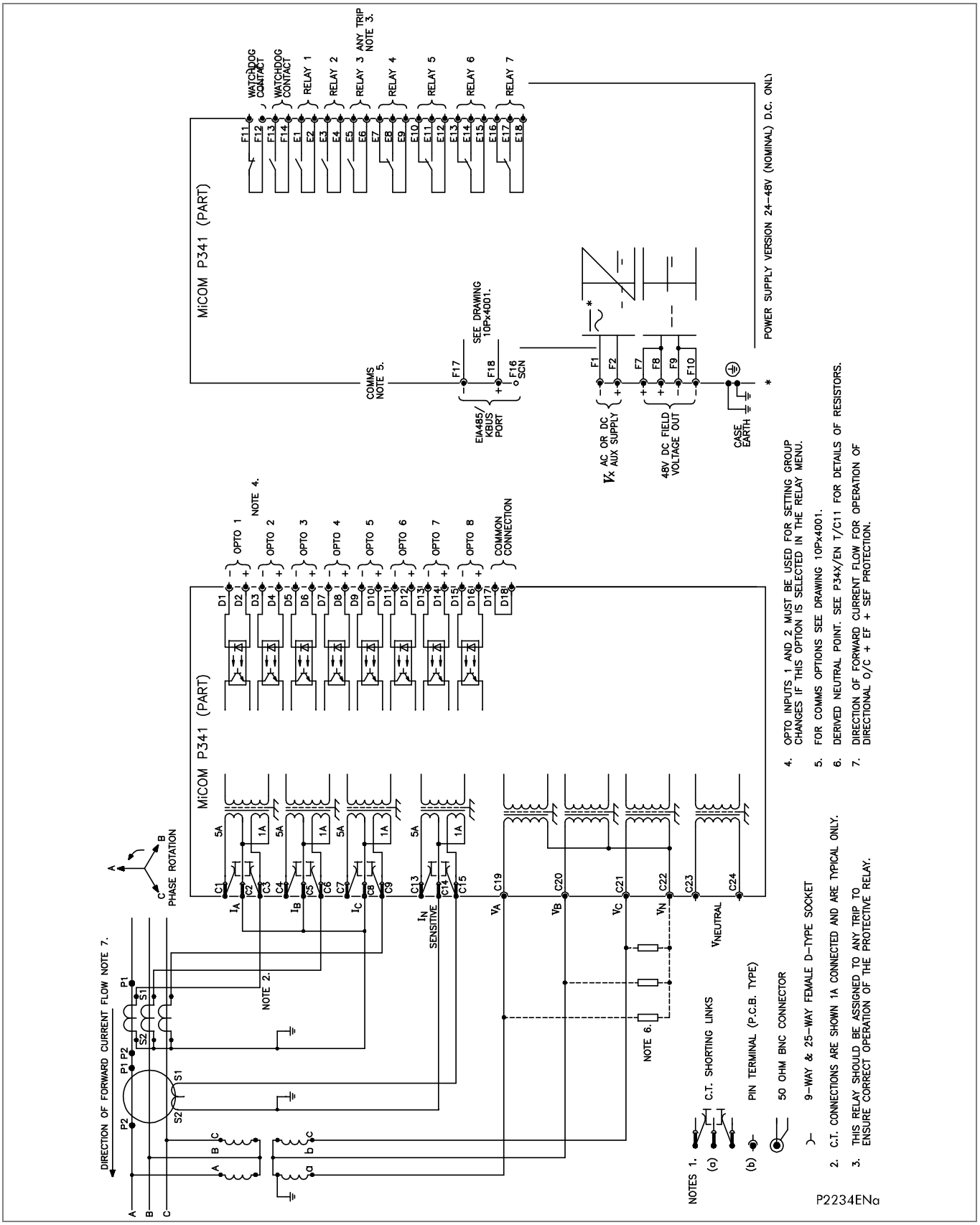

Figure 6 - Interconnection protection relay (40TE) for embedded generation using VEE-connected VT's (8 I/P & 7 O/P)

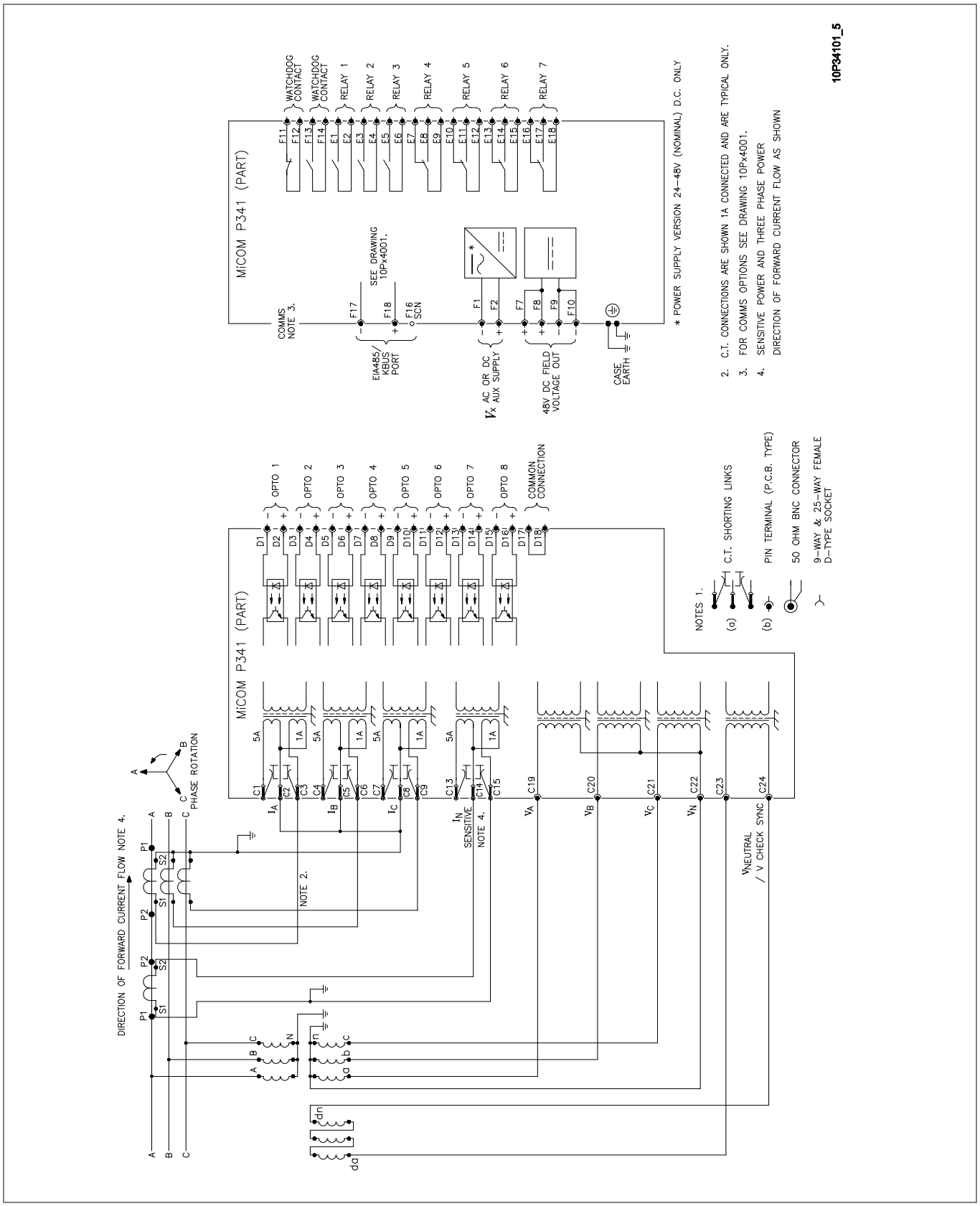

Figure 7 - Interconnection protection relay (40TE) for embedded generation and sensitive power (8 I/P & 7 O/P)

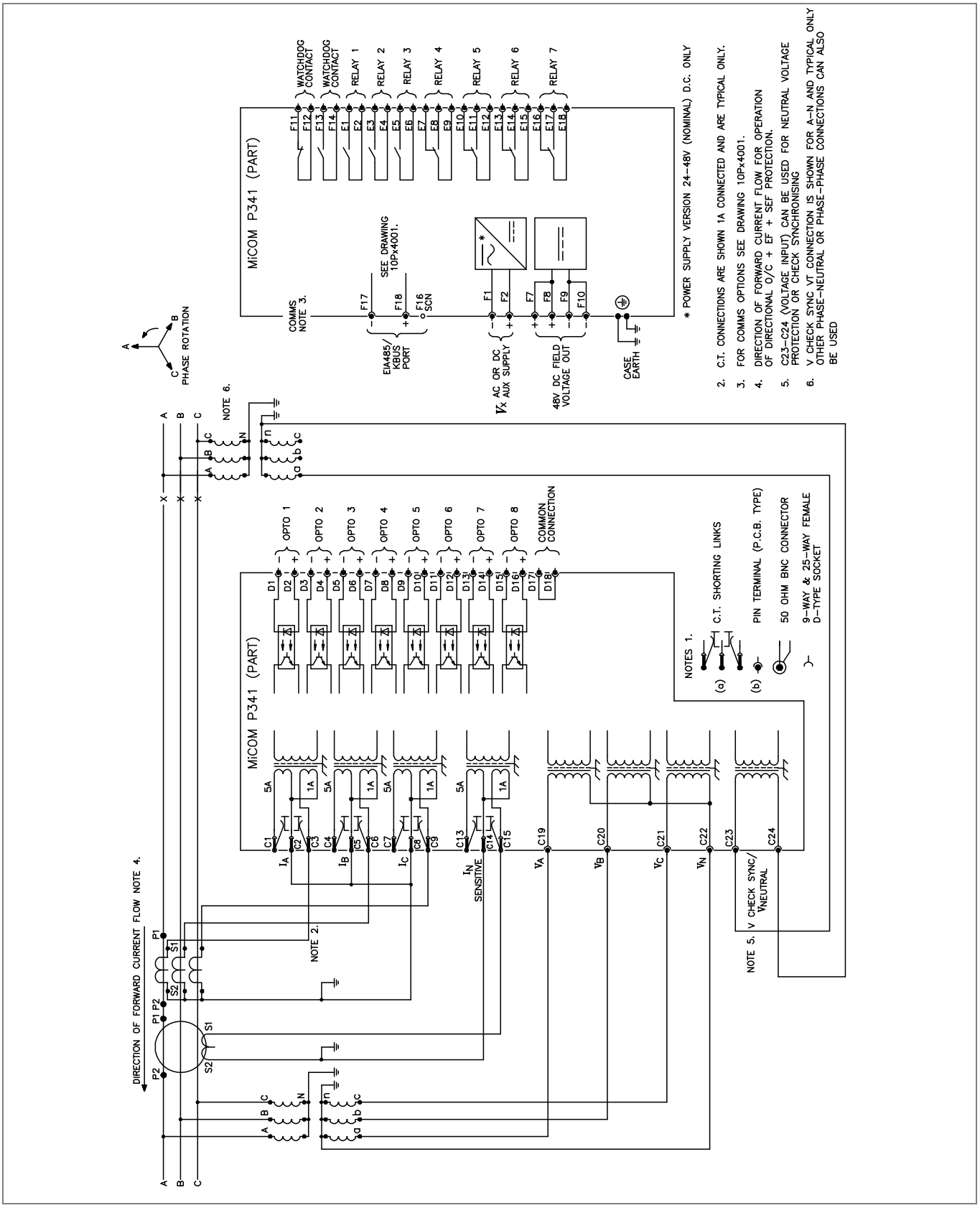

Figure 8 - Interconnection protection relay (40TE) for embedded generation and check synchronizing (8 I/P & 7 O/P)

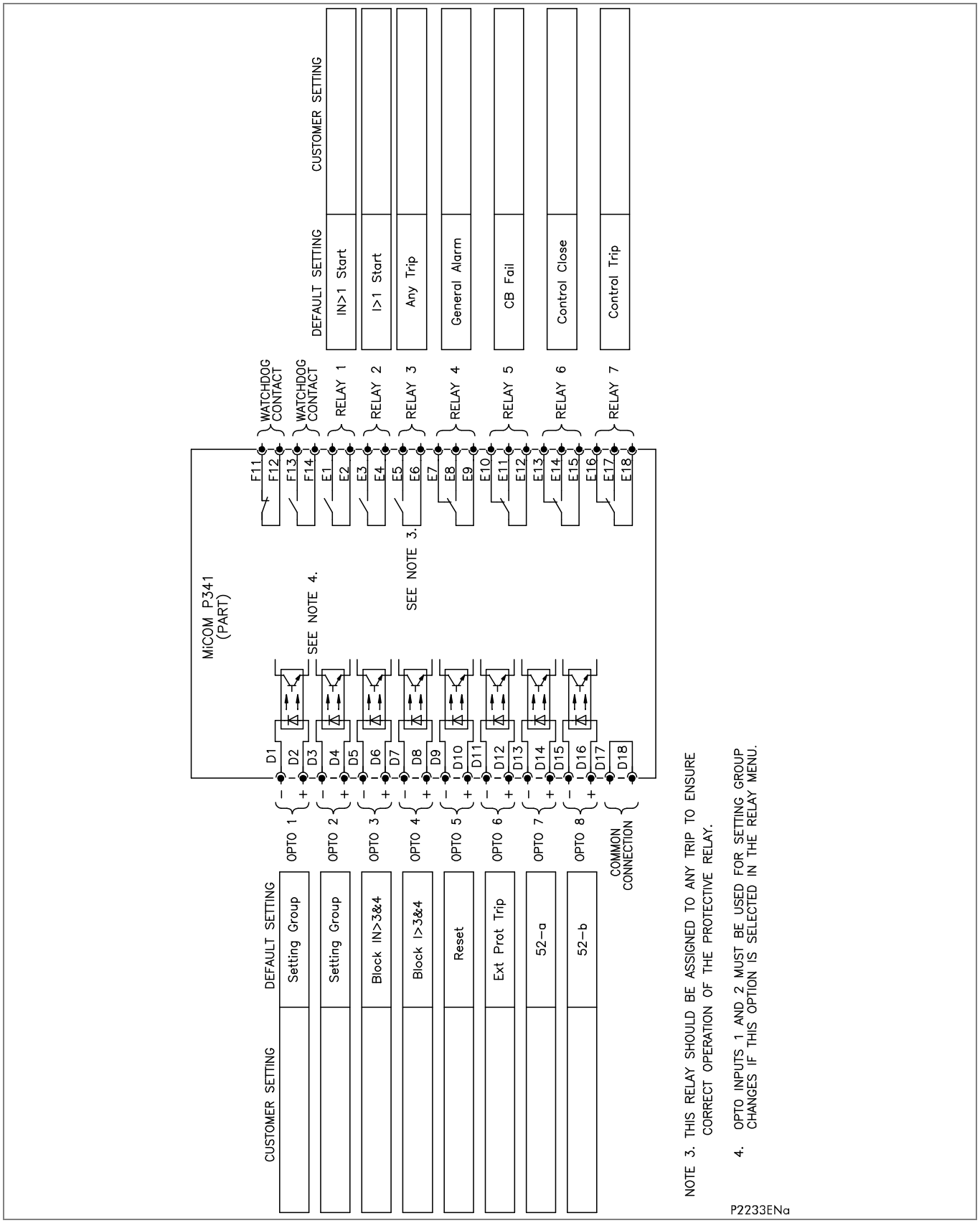

Figure 9 - Interconnection protection relay (40TE) for embedded generation (8 I/P & 7 O/P)

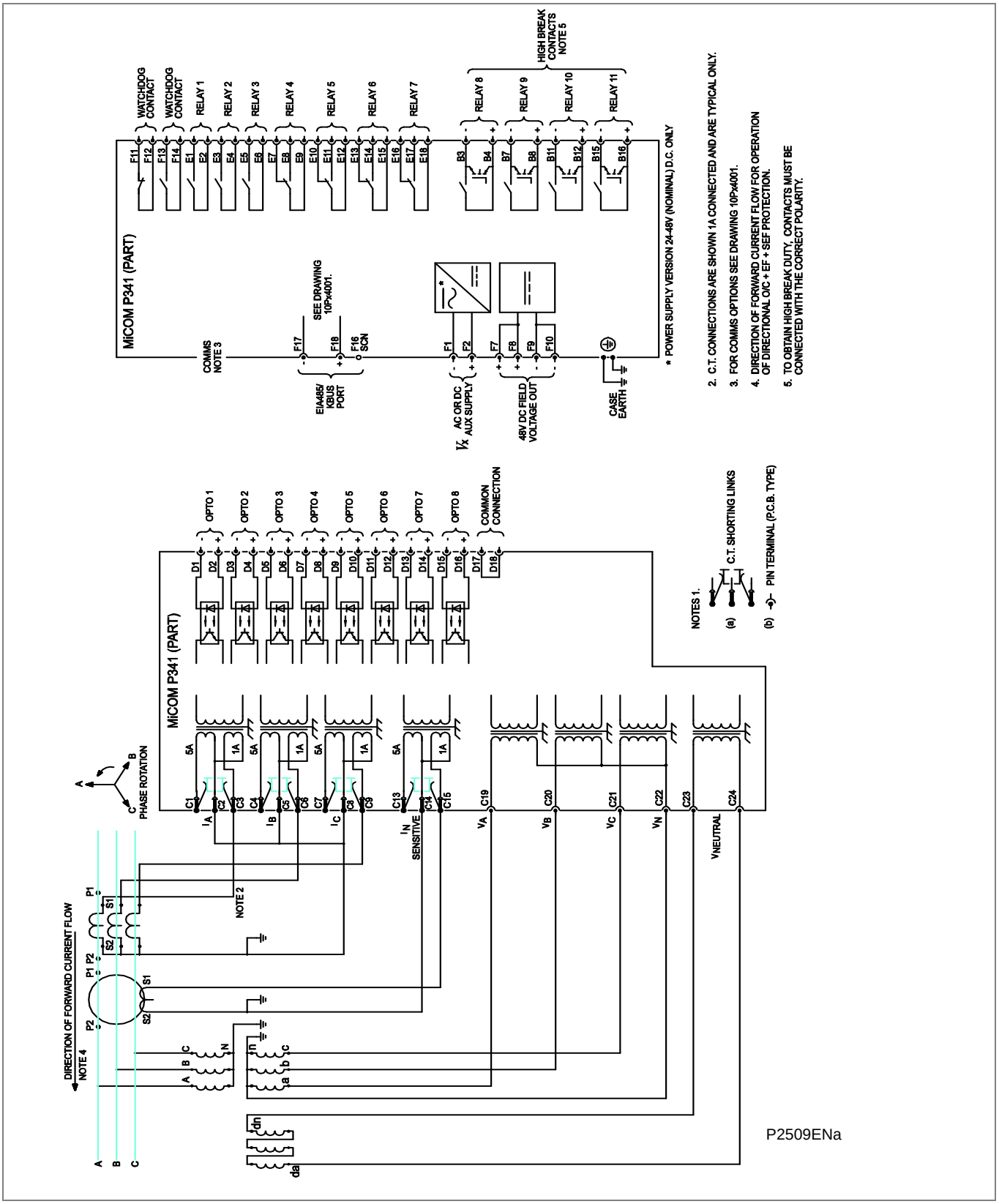

Figure 10 - Interconnection Protection Relay (40TE) for Embedded Generation (8 I/P & 11 O/P (4HB))

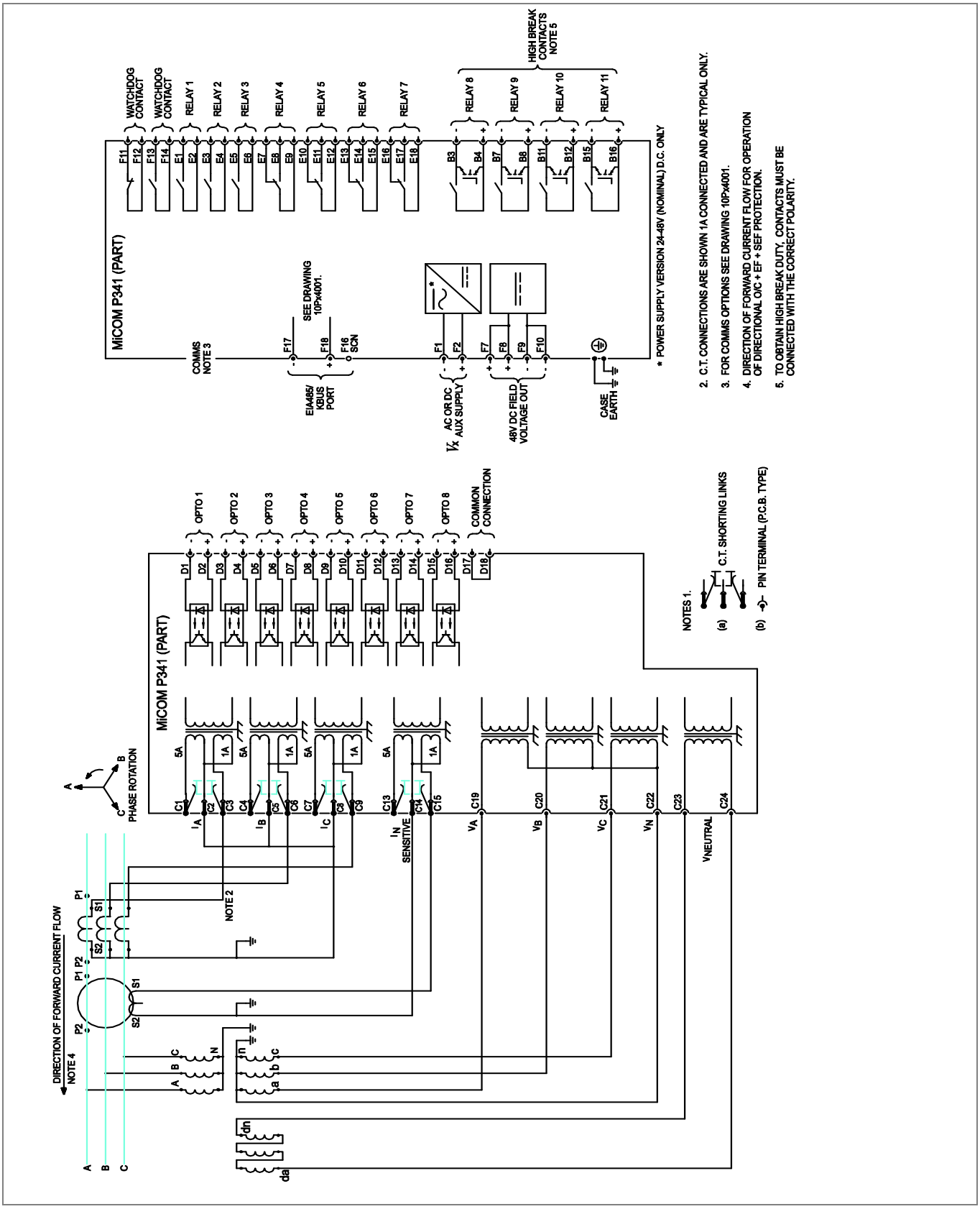

Figure 11 - Dynamic line rating protection relay (40TE) (8 I/P & 7 O/P & CLIO)

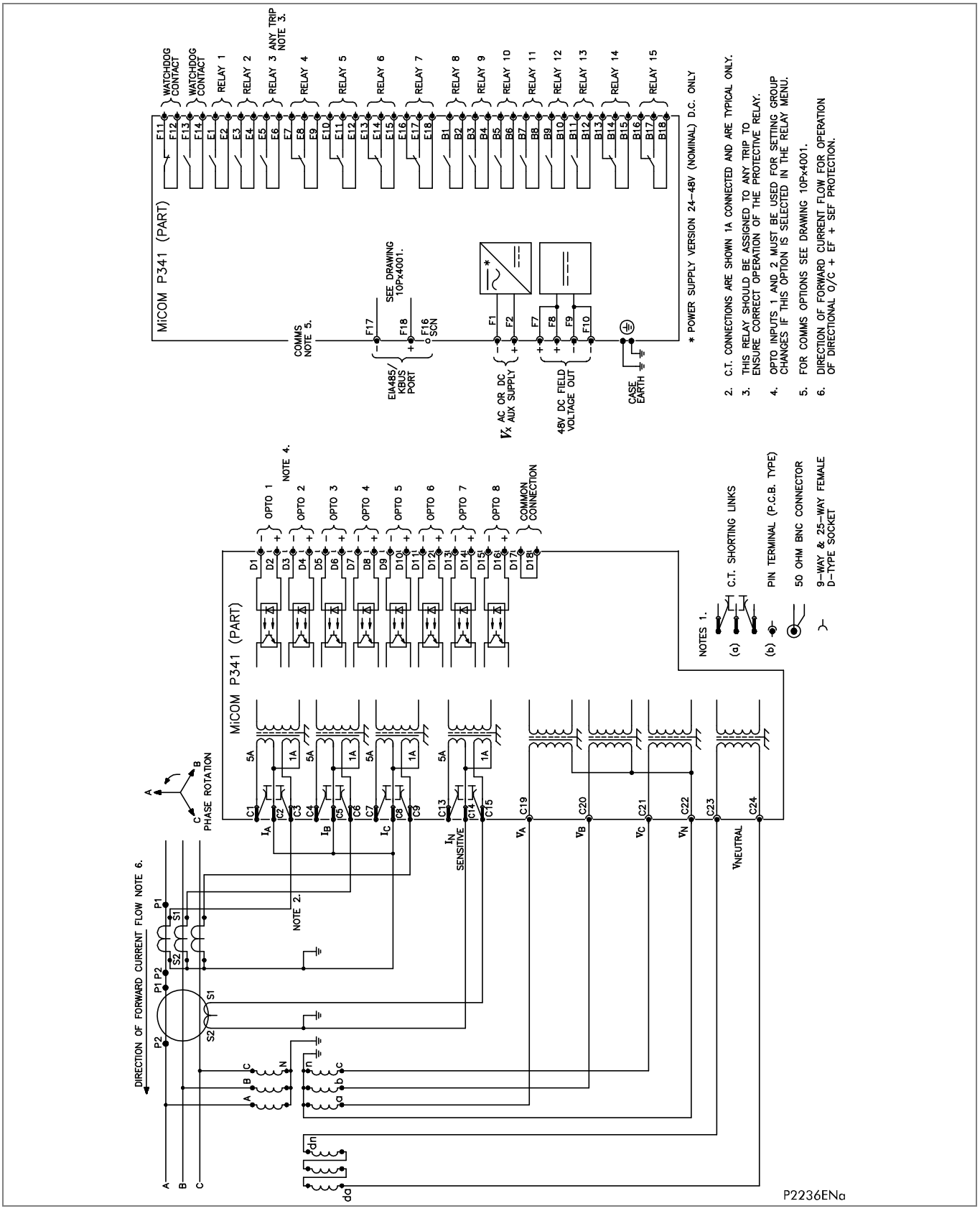

Figure 12 - Interconnection protection relay (40TE) for embedded generation (8 I/P & 15 O/P)

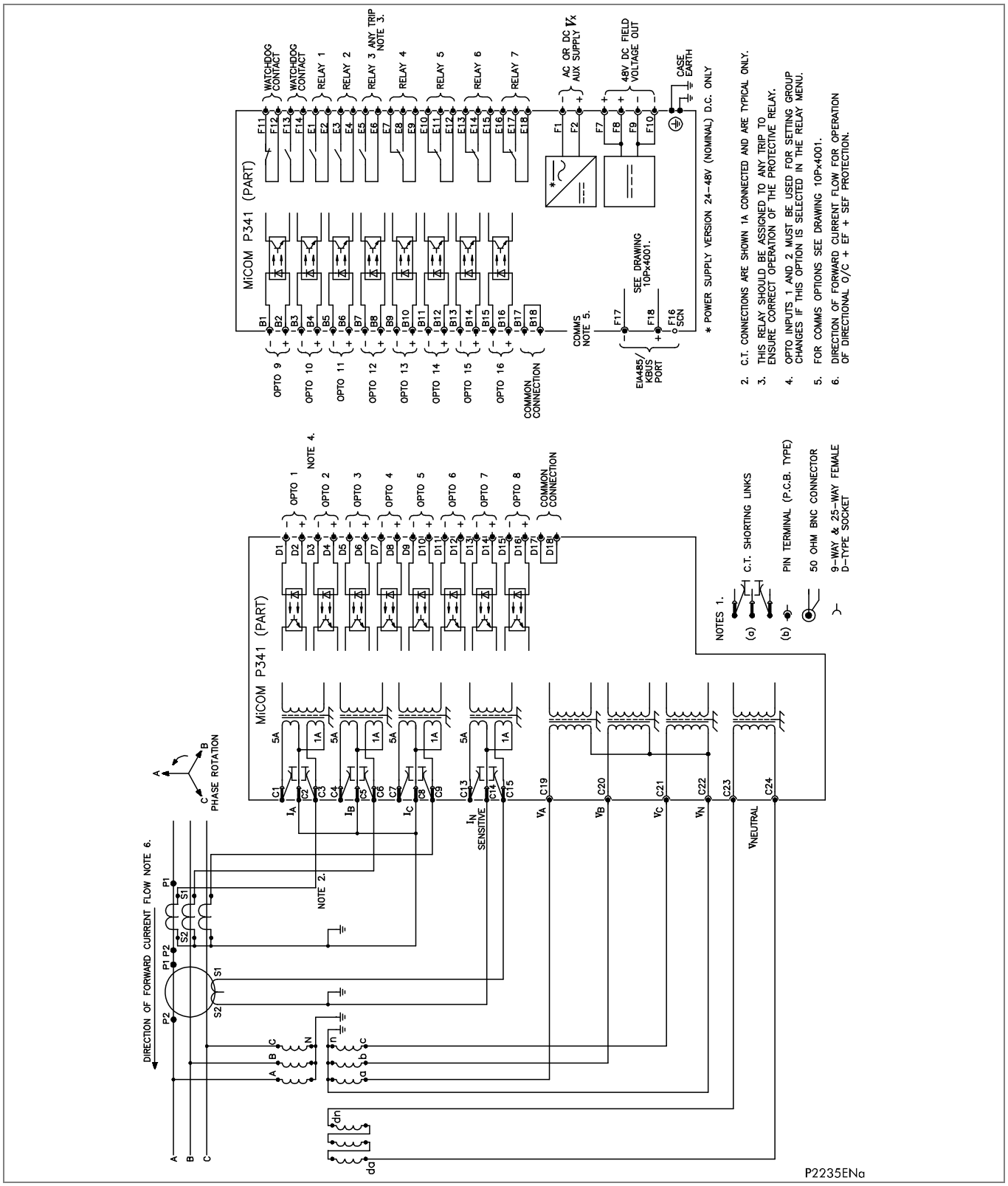

Figure 13 - Interconnection protection relay (40TE) for embedded generation (16 I/P & 7 O/P)

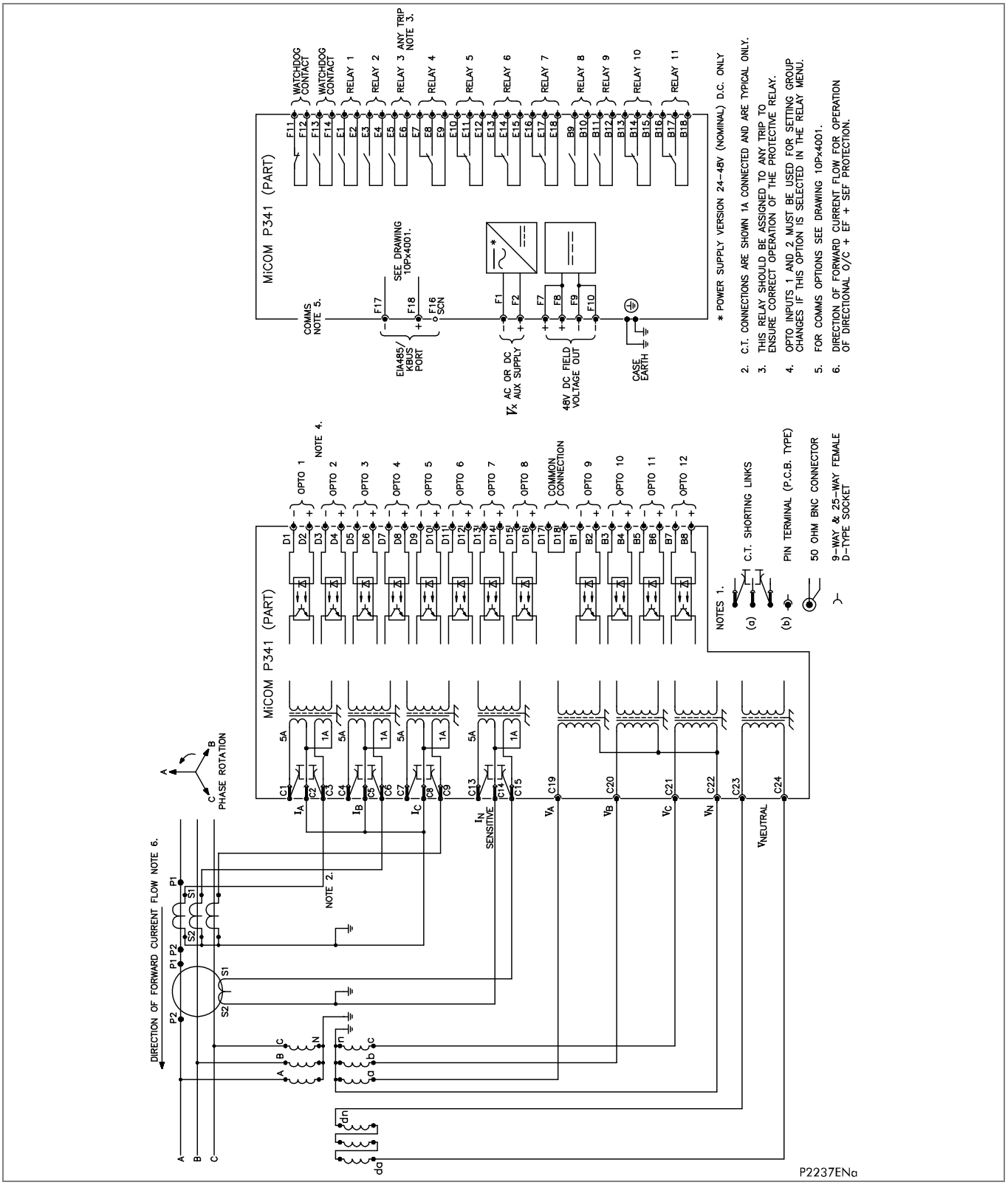

Figure 14 - Interconnection protection relay (40TE) for embedded generation (12 I/P & 11 O/P)

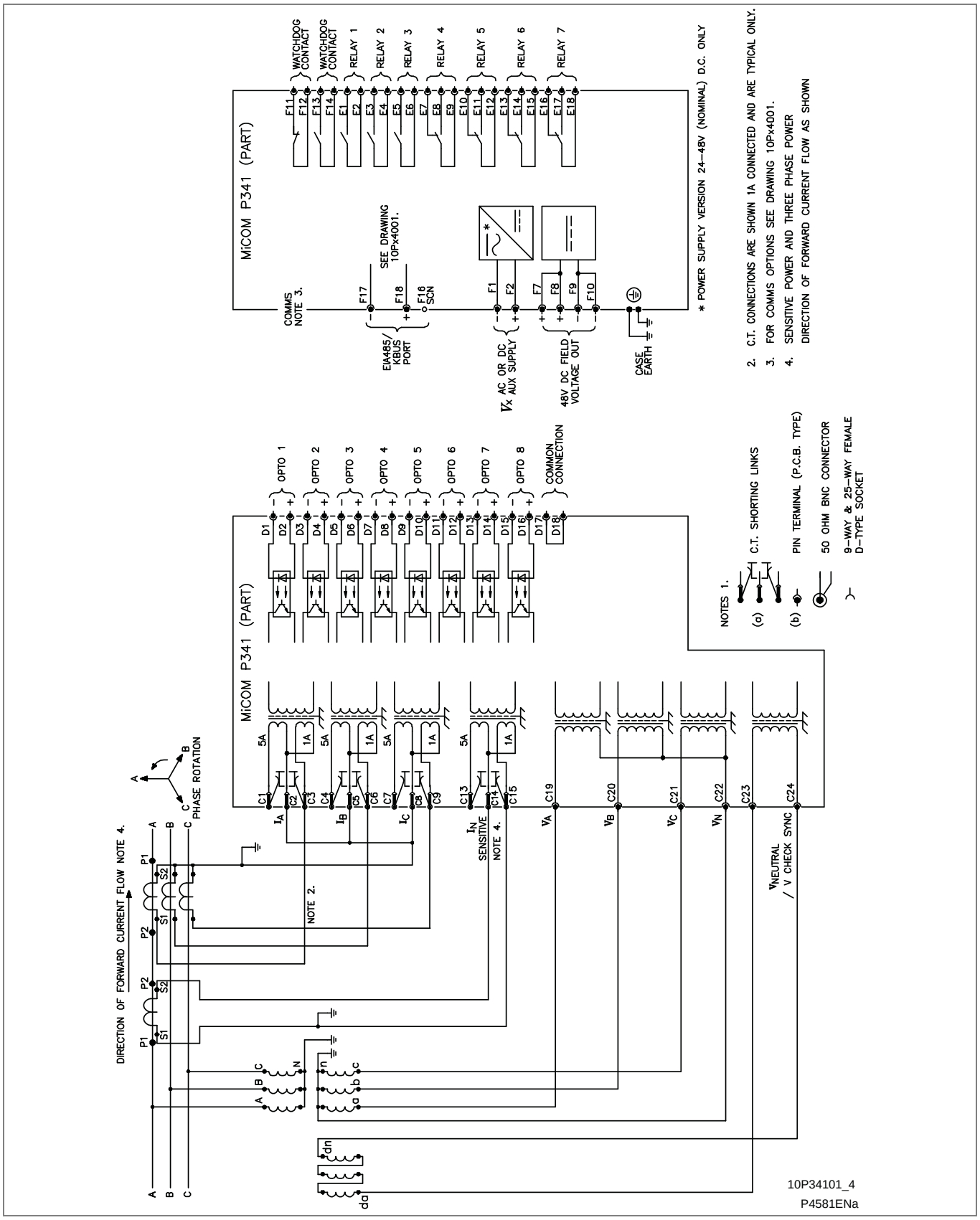

Figure 15 - Dynamic line protection relay (60TE) (16 I/P & 16 O/P & CLIO)

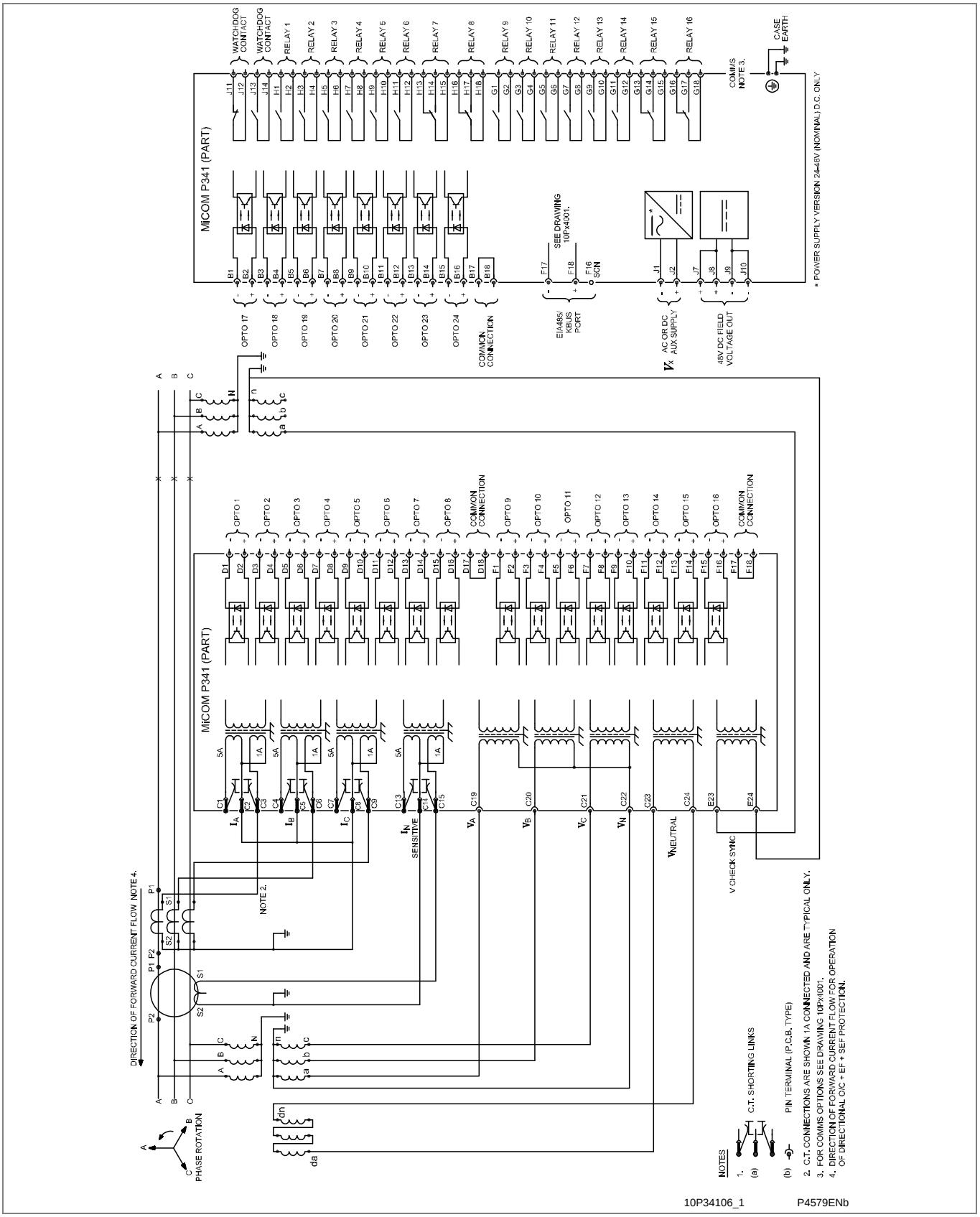

Figure 16 - Interconnection protection relay (60TE) for embedded generation (24 I/P& 16 O/P)

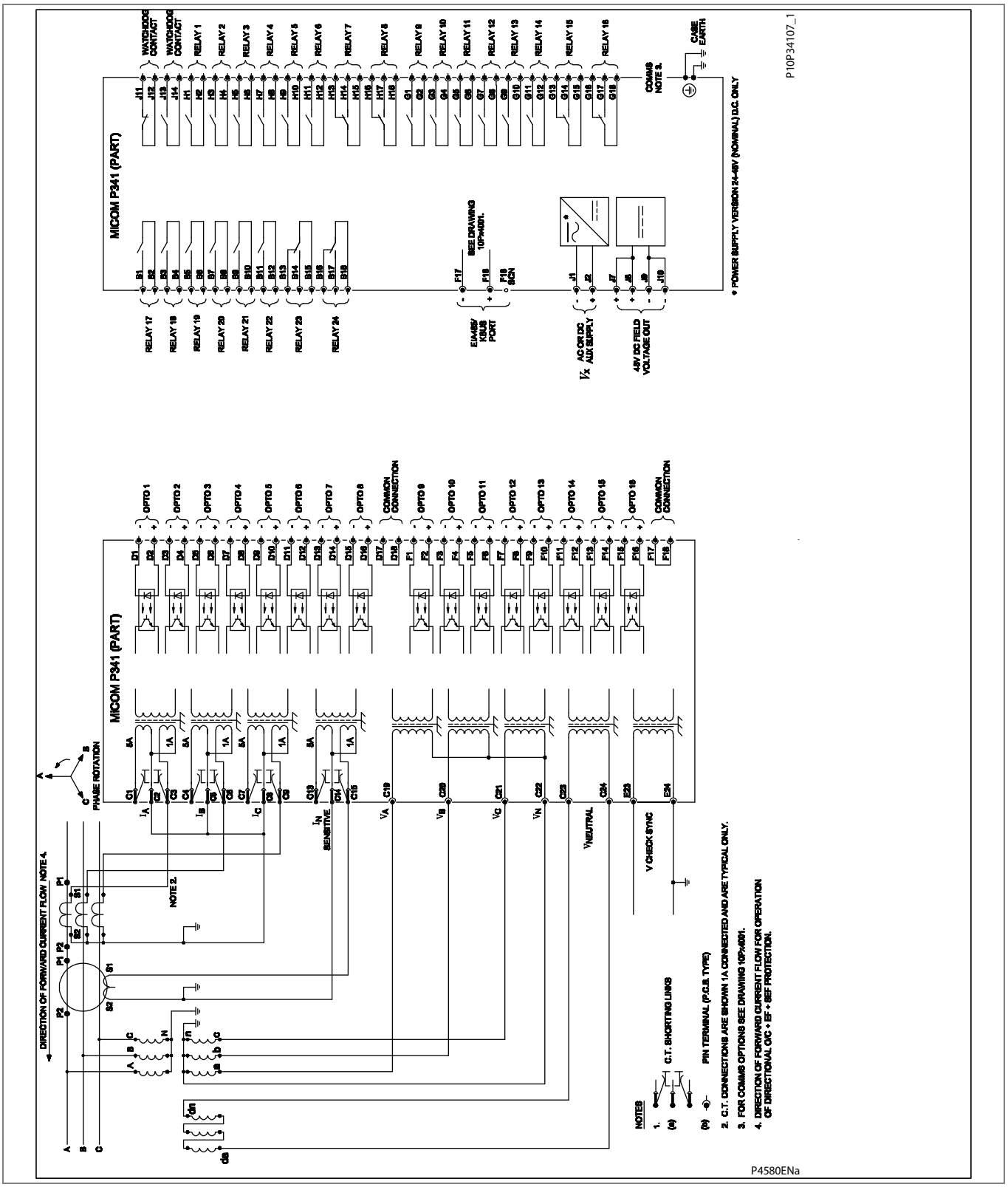

Figure 17 - Interconnection protection relay (60TE) for embedded generation (16 I/P & 24 O/P)

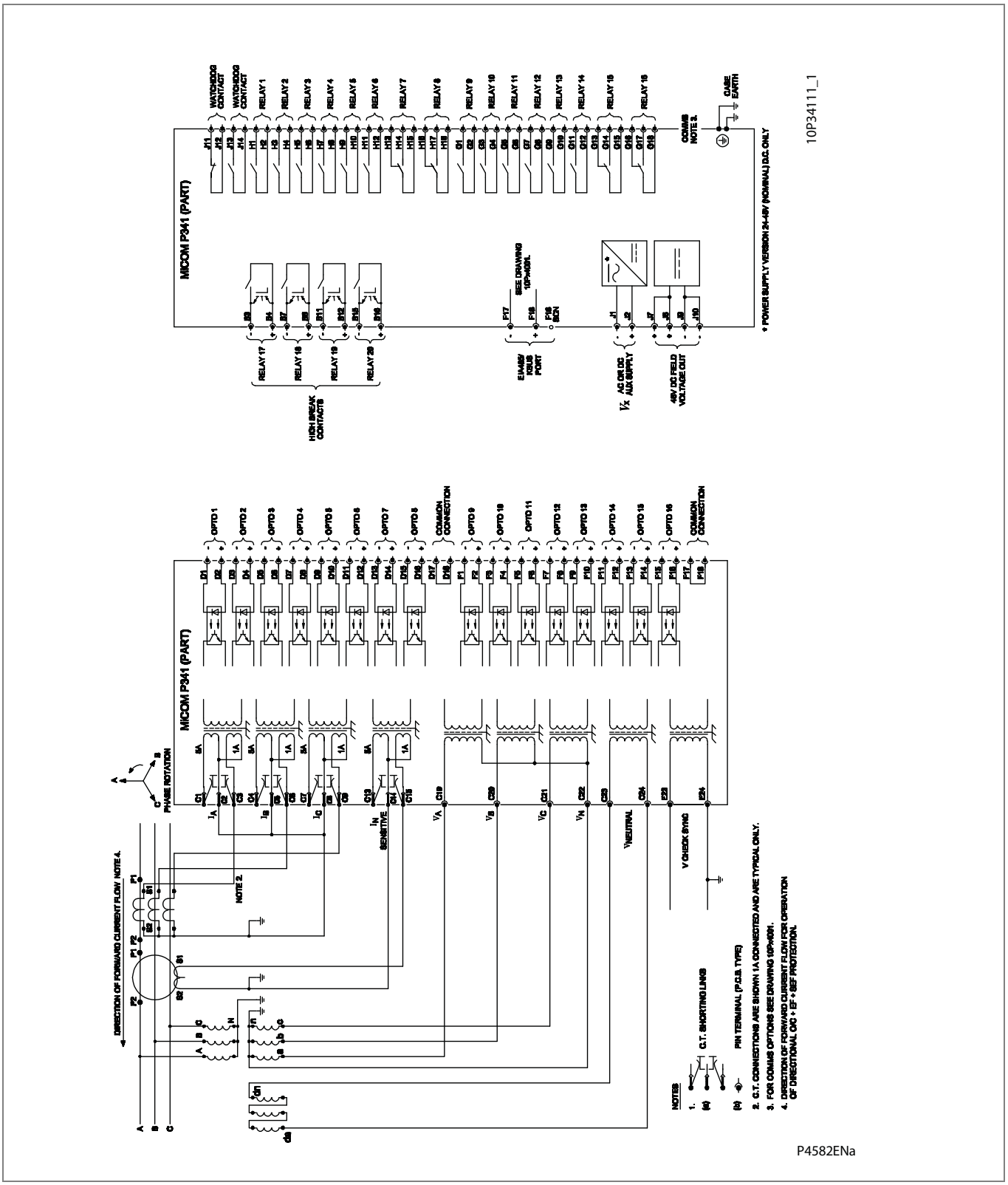

Figure 18 - Interconnection protection relay (60TE) for embedded generation (16 I/P & 20 O/P (4HB))

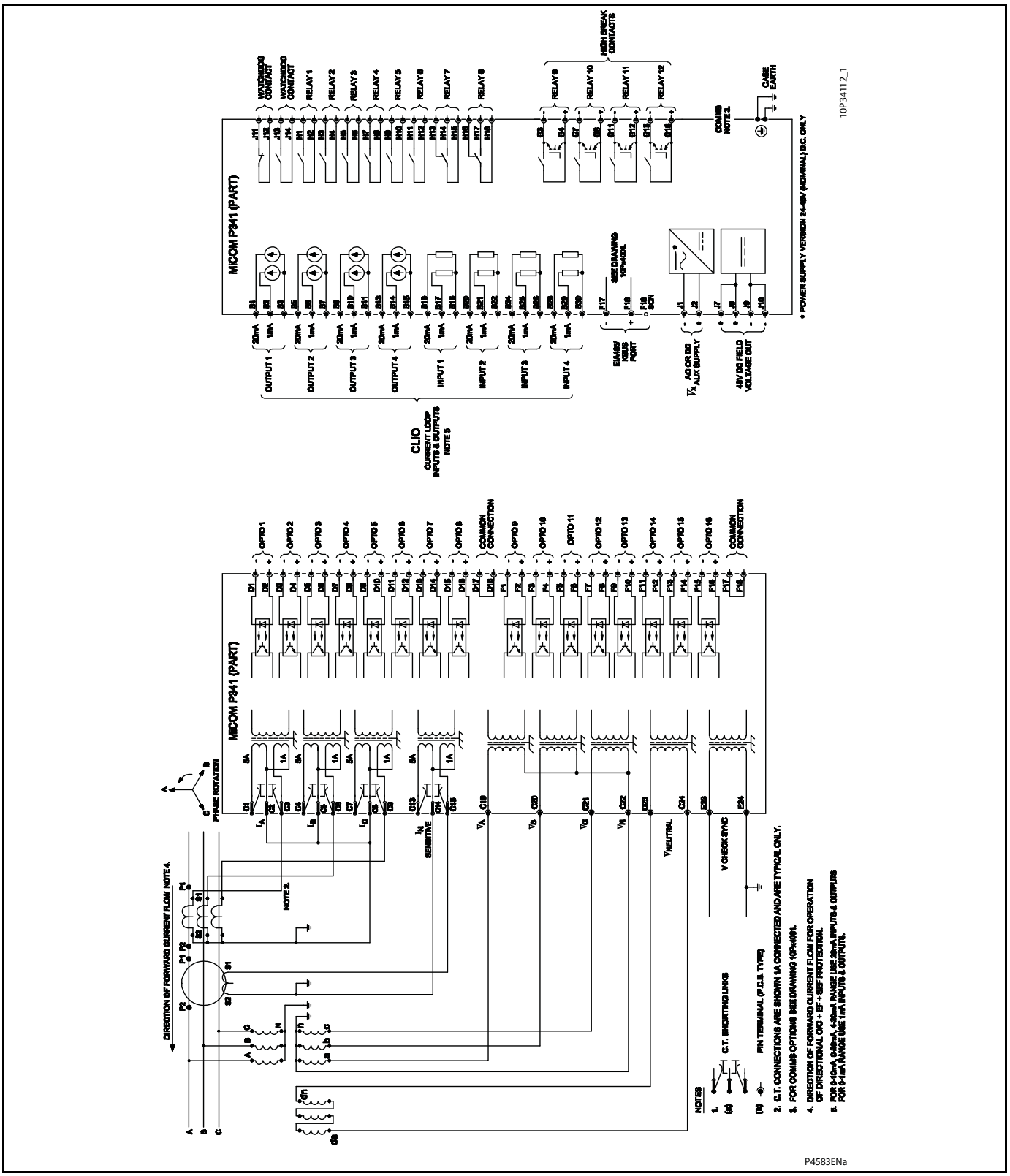

Figure 19 - Interconnection protection relay (60TE) (16 I/P & 12 O/P (4HB) & CLIO)

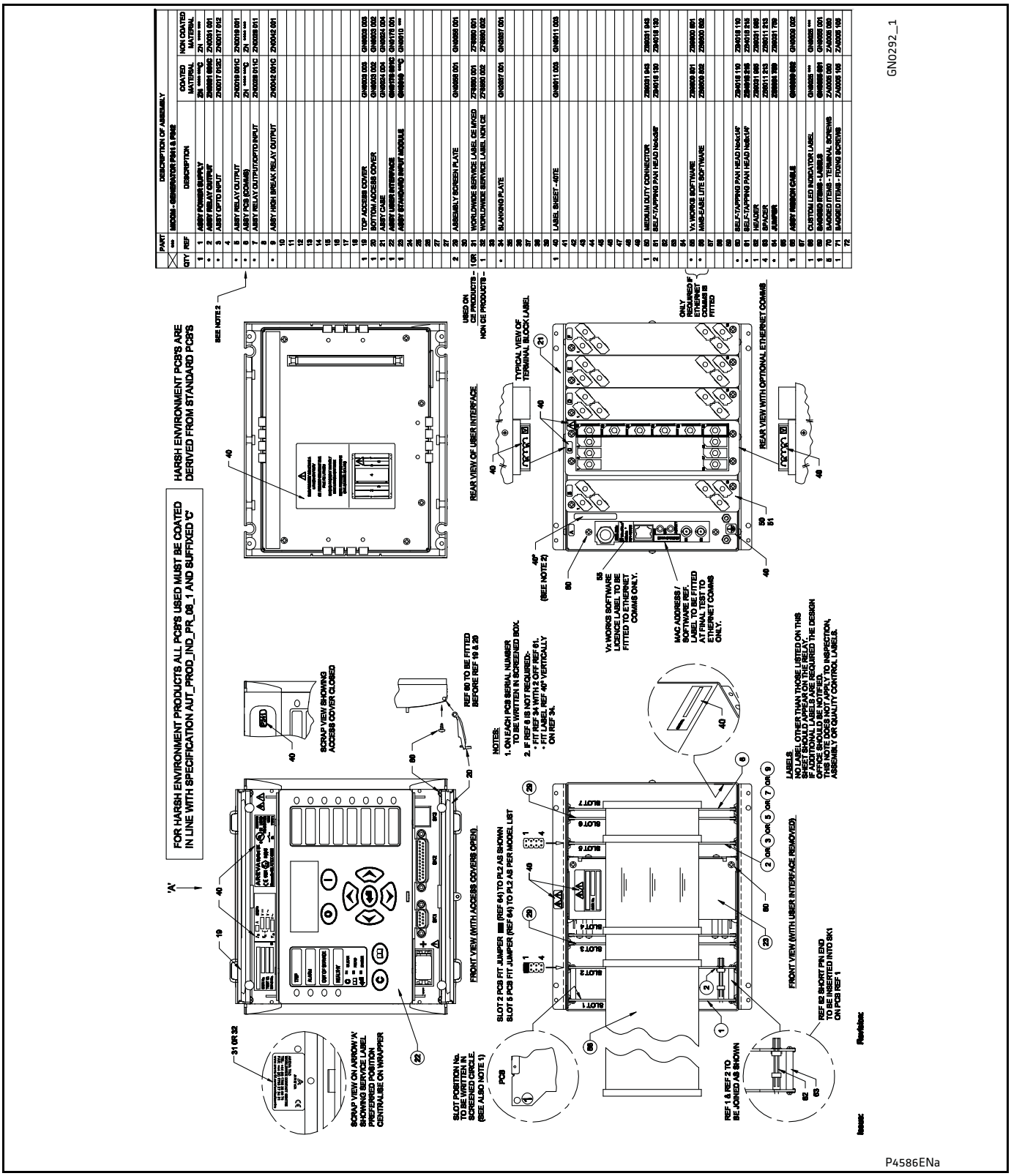

Figure 20 - Assembly P341 interconnection and DLR protection relay (40TE) (8 I/P & 7 O/P with optional I/P & O/P)

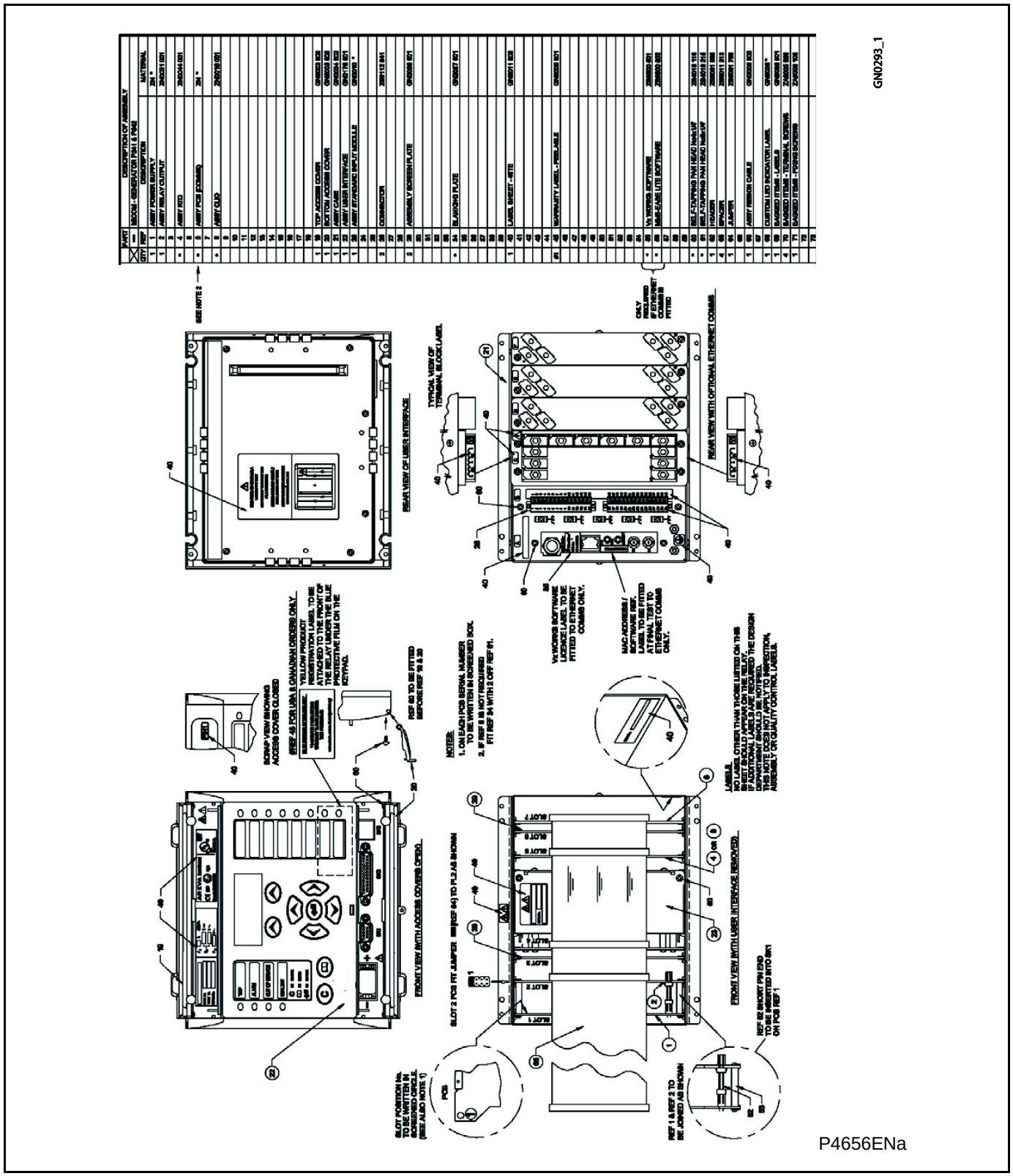

Figure 21 - Assembly P341 interconnection and DLR protection relay (40TE) (8 I/P & 7 O/P with optional CLIO)

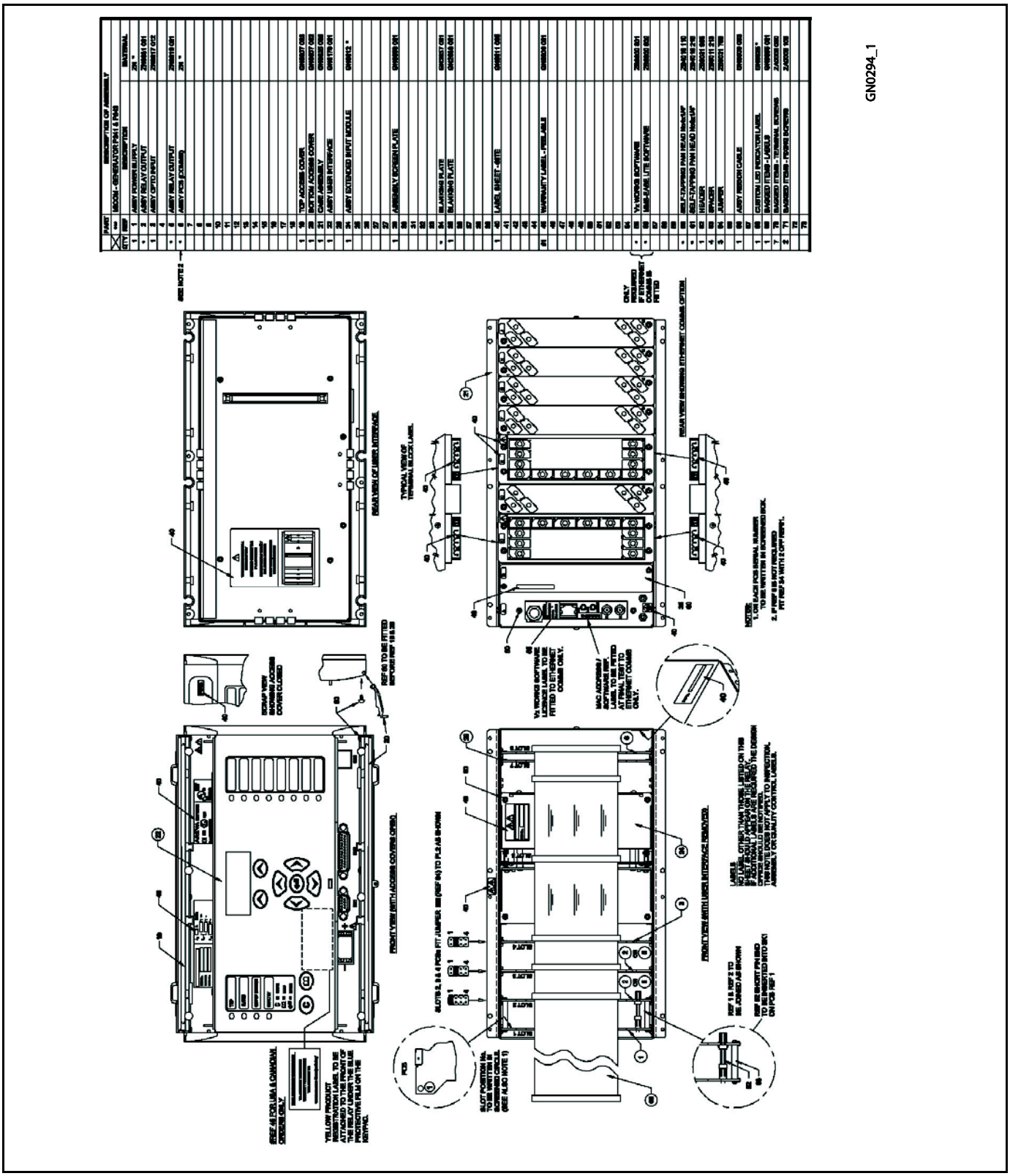

Figure 22: Assembly P341 interconnection and DLR protection relay (60TE) (16 I/P & 16 O/P with optional I/P & O/P)

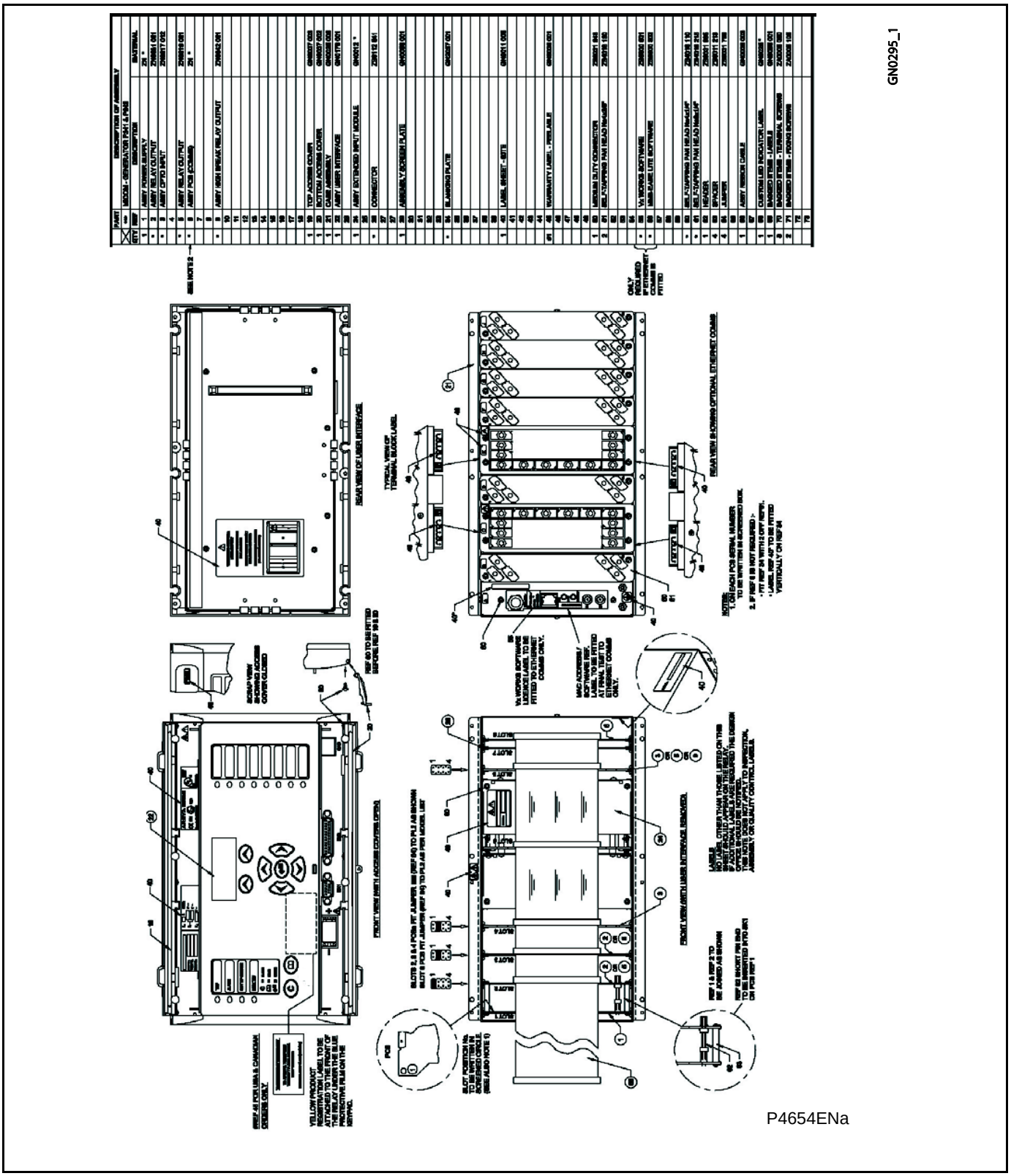

Figure 23 - Assembly P341 interconnection and DLR protection relay (60TE) (16 I/P & 16 O/P with optional HB O/P)

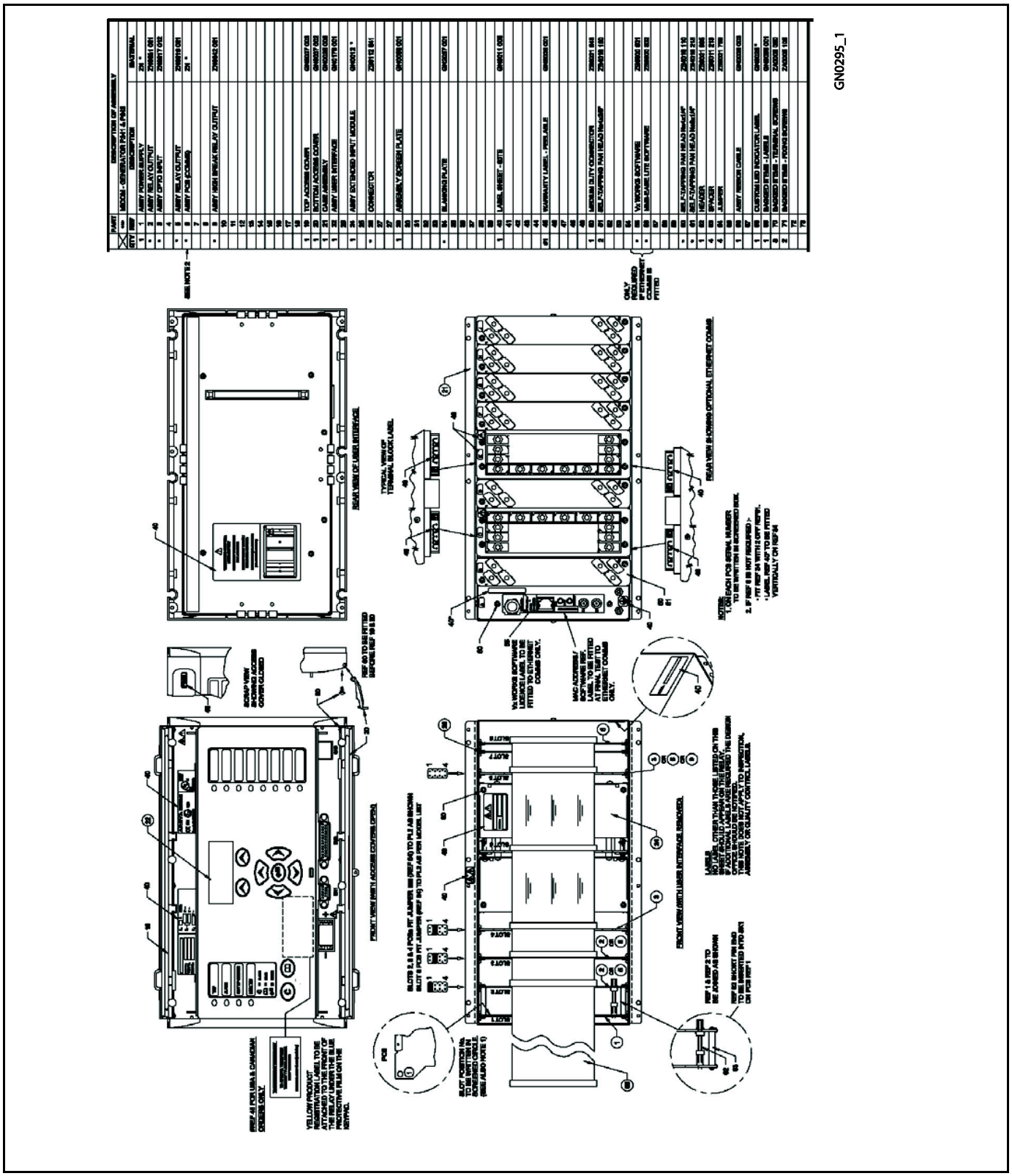

Figure 24 - Assembly P341 interconnection and DLR protection relay (60TE) (16 I/P & 16 O/P with optional CLIO)

VERSION HISTORY

CHAPTER 16

Date:	February 2012
Hardware Suffix:	J (P341)
Software Version:	36 and 71 (with DLR)
Connection Diagrams:	10P341xx (xx = 01 to 12)

CONTENTS

Notes:

1 P341 SOFTWARE VERSION HISTORY

Software version		Hard-ware suffix	Original date of issue	Description of changes	S1 compat-ibility	Technical document-ation
Major	Minor					
01	A	A	October 1999	Original Issue	V1.09 or Later	TG8617A
01	B	A	December 1999	Corrected 90 degree phase angle displacement in measurement of Ia, Ib, Ic. Corrected VT scaling factors for Va, Vb, Vc in fault records. Minor bug fixes	V1.09 or Later	TG8617A
01	C	A	March 2000	Trip LED status saved during power cycling. Corrections to omission of fault duration and CB operating time in fault record. Corrected -90 degree phase angle displacement in measurement of VN and VN derived. Reset of alarms and indications event added to event record. Minor bug fixes	V1.09 or Later	TG8617A
02	A	A	October 2000	DNP 3.0 protocol added. Courier and MODBUS enhancements to improve compatibility with other protection (mainly PX20 products). Modifications to IEC60870-5-103 Test Mode. Poledead logic DDB signals made visible in PSL. Foreign Language text updated. Active and reactive power added to MODBUS fault record. Minor bug fixes	V1.10 or Later	P341/EN T/B11
03	A	A	January 2001	Event filtering added. Correction to energy measurement inaccuracy. Minor bug fixes	V2.00 or Later	P341/EN T/B11
03	B	A	May 2001	Minor bug fixes	V2.00 or Later	P341/EN T/B11
03	C	A	January 2002	Resolved possible reboot caused by Disturbance Recorder. Minor bug fixes	V2.00 or Later	P341/EN T/B11
03	D	A	February 2002	Resolved possible reboot caused by invalid MODBUS requests. Minor bug fixes	V2.00 or Later	P341/EN T/B11
03	E	A	December 2002	DNP 3.0 Object 12 “CROB” implementation is now compliant for simple function points . DNP 3.0 Object 10 included in Class 0 poll. DNP 3.0 support for season in time information. Correction to MODBUS CB Trip and Close via "0" command. Change to neutral voltage displacement protection and directional SEF protection so that they are not blocked by the VT supervision logic when the VN Input and ISEF>VNPol are selected as Measured. Correction to undervoltage stage 2 (V<2) setting range. The setting range has been increased from 10-70 V to 10-120 V (Vn=110/120 V) so that it is the same as V<1. Correction to VT ratio scaling problem in the disturbance recorder. Correction to value of derived neutral current shown on the front panel default display. Minor bug fixes	V2.00 or Later	P341/EN T/B11

Software version		Hard-ware suffix	Original date of issue	Description of changes	S1 compat-ibility	Technical document-ation
Major	Minor					
03	F	A	March 2004	Correction to the fault recorder window for current based trips so that it can terminate properly once the FAULT_REC_TRIG signal (DDB 288) is reset. Previously it needed to wait for Relay 3 to reset also before termination. Power measurement limits added to prevent non zero values with no current and voltage. Also power factor measurements limited to +/-1. Resolved possible reboot caused by failure to time sync from DNP 3.0 when IRIG-B is active which is also providing the time sync. Now, any failure of the DNP 3.0 to time sync will only produce a maintenance record. Resolved possible problem with disturbance recorder triggering which could cause loss of disturbance record data, temporary freezing of the user interface or loss of rear port communications. Resolved unreliable MODBUS framing. Resolved creation of spurious password expired event when menu cell or MODBUS register is accessed. Resolved error code 0x 8D840000. Resolved incorrect derived 'IN' value on front panel default display. Minor bug fixes	V2.00 or Later	Px341/EN T/B11
03	G	A	June 2004	For Courier/DNP 3.0/IEC60870-5-103 builds only. Correction to parity setting for MODBUS and DNP 3.0 when the relay is powered up. Improvement to the self checking of the analogue channels and SRAM. Minor bug fixes.	V2.00 or Later	Px341/EN T/B11
03	H	A	July 2004	For MODBUS builds only. Changes as for G. Improvement to the MODBUS driver to cope better with spurious data transmissions and failures of the relay to respond to comments where the server response time is fast. Minor bug fixes	V2.00 or Later	Px341/EN T/B11
03	J	A	June 2005	Correction to the alarm and trip indication of the faulted phase(s) for the second stage of the undervoltage and overvoltage protection in the fault record information on the relay LCD. Correction to false frequency protection start at power-up. MODBUS driver modified to prevent relay reboot with error code 0x8C810000 in hardware A/B/C relays for 60 Hz applications where fast polling and high baud rates are used. Modification to prevent reboot when large number of control and settings are sent to relay in quick succession over DNP 3.0. Minor bug fixes	V2.00 or Later	Px341/EN T/B11
04	A	A	June 2001	Not released to production. Sensitive reverse power added. Neutral voltage displacement threshold, VN>1/2, increased from 50 to . 80 V (Vn=100/120 V), 200 to 320 V (Vn=380/480 V). Earth fault polarizing voltage threshold, Vnpol, increased from 22 to 88 V (Vn=100/120 V) and 88 to 352 V (Vn=380/480 V). cos phi and sin phi features added to SEF protection. Minor bug fixes	V2.01 or Later	P341/EN T/B11
04	B	A	July 2001	Not released to production. Minor bug fix to background self check diagnostics introduced in 04A	V2.01 or Later	P341/EN T/B11
04	C	A	December 2001	Minor bug fixes	V2.01 or Later	P341/EN T/B11
04	D	A	January 2002	Resolved possible reboot caused by Disturbance Recorder. Minor bug fixes	V2.01 or Later	P341/EN T/B11
04	E	A	February 2002	Resolved possible reboot caused by invalid MODBUS requests. Minor bug fixes	V2.01 or Later	P341/EN T/B11

Software version		Hard-ware suffix	Original date of issue	Description of changes	S1 compat-ibility	Technical document-ation
Major	**Minor**					
04	F	A	December 2002	Enhanced DNP 3.0 Object 10 support for Pulse On/Close control points. DNP 3.0 Object 10 included in Class 0 poll. DNP 3.0 support for season in time information	V2.01 or Later	P341/EN T/B11
04	F	A	December 2002	Correction to MODBUS CB Trip and Close via "0" command. Change to neutral voltage displacement protection and directional SEF protection so that they are not blocked by the VT supervision logic when the VN Input and ISEF>VNPol are selected as Measured. Correction to undervoltage stage 2 (V<2) setting range. The setting range has been increased from 10-70 V to 10-120 V (Vn=110/120 V) Correction to VT ratio scaling problem in the disturbance recorder. Minor bug fixes	V2.01 or Later	P341/EN T/B11
04	G	A	March 2004	Correction to the fault recorder window for current based trips so that it can terminate properly once the FAULT_REC_TRIG signal (DDB 288) is reset. Previously it needed to wait for Relay 3 to reset also before termination. Power measurement limits added to prevent non zero values with no current voltage. Also power factor measurements. Resolved possible reboot caused by failure to time sync from DNP 3.0 when IRIG-B is active which is also providing the time sync. Now any failure of the DNP 3.0 to time sync will only produce a maintenance record. Resolved possible problem with disturbance recorder triggering which could cause loss of disturbance record data, temporary freezing of the user interface or loss of rear port . Resolved unreliable MODBUS framing. Resolved creation of spurious password expired event when menu cell or MODBUS register is accessed. Resolved error code 0x 8D840000. Resolved incorrect derived 'IN' value on front panel default display. Minor bug fixes	V2.01 or Later	P341/EN T/B11
04	H	A	June 2004	For Courier/DNP 3.0/IEC60870-5-103 builds only. Correction to parity setting for MODBUS and DNP 3.0 when the relay is powered up. Improvement to the self checking of the analogue channels and SRAM. Minor bug fixes	V2.01 or Later	P341/EN T/B11
04	J	A	July 2004	For MODBUS builds only. Changes as for H. Improvement to the MODBUS driver to cope better with spurious data transmissions and failures of the relay to respond to commands where the server response time is fast. Minor bug fixes	V2.01 or Later	P341/EN T/B11
04	K	A	June 2004	Changes are the same as 03J	V2.01 or Later	P341/EN T/B11
05	A	A/B	September 2001	Not released to production. Thermal overload protection added. Control inputs added. PSL DDB list of signals increased from 512 to 1023 signals. PSL Data menu added with PSL Reference information for version history. Optional additional opto inputs and output contacts . New 'Universal' wide ranging opto inputs (Model number hardware suffix hanged to B). New output contacts with better break and continuous carry ratings (Model number hardware suffix changed to B). Minor bug fixes. Courier and MODBUS builds only	V2.05 or Later	P341/EN T/D22
05	B	A/B	October 2001	Not released to production. Correction to VT ratio scaling problem in the disturbance recorder. Minor bug fixes. Courier and MODBUS builds only	V2.05 or Later	P341/EN T/D22

Software version		Hard-ware suffix	Original date of issue	Description of changes	S1 compat-ibility	Technical document-ation
Major	Minor					
05	D	A/B	February 2002	Resolved possible reboot caused by Disturbance Recorder. Resolved possible reboot caused by invalid MODBUS requests. Enhancements to IEC60870-5-103 build to include private codes, monitor blocking and disturbance record extraction. New uncompressed disturbance recorder for IEC60870-5-103 build only. Correction to IEC60870-5-103 voltage measurements for Vn=380/480 V relays. Minor bug fixes	V2.05 or Later	P341/EN T/D22
05	E	A/B	March 2002	Minor bug fixes	V2.05 or Later	P341/EN T/D22
05	F	A/B	October 2002	DNP 3.0 Object 12 “CROB” implementation is now compliant for simple function points. Correction to MODBUS CB Trip and Close via "0" command. Change to neutral voltage displacement protection and directional SEF protection so that they are not blocked by the VT supervision logic when the VN Input and ISEF>VNPol are selected as Measured. Correction to undervoltage stage 2 (V<2) setting range. The setting range has been increased from 10-70 V to 10-120 V (Vn=110/120 V) so that it is the same as V<1. Minor bug fixes	V2.05 or Later	P341/EN T/D22
05	G	A/B	August 2000	Control input sales added to non volatile memory. German language text updated. Power measurement limits added to prevent non zero values with no current and voltage. Also power factor measurements limited to +/-1. In the Commissioning Test menu the DDB status has been made visible on the front panel display. Support for the Trip LED Status and Alarm Status added to G26. data type for MODBUS register 30001. Correction to the CB trip/Close functionality via MODBUS so that local/remote setting in the CB control menu is not ignored. Correction to MODBUS auto event extraction which does not work correctly. DNP 3.0 Object 12 “CROB” implementation is now compliant for simple function points. DNP 3.0 object 10 added to class 0 poll. Correction to DNP 3.0 time sync operation so that it does not modify the season bit in the time stamp. Correction to the manual reset user alarms so that the event record shows the alarm turning off when a reset command has been issued. Previously the “alarm off” event is produced once the initiating signal is removed. Correction to the fault recorder window for current based trips so that it can terminate properly once the FAULT_REC_TRIG signal (DDB 288) is reset. Previously it needed to wait for Relay 3 to reset also before termination.	V2.05 or Later	P341/EN T/D22

Software version		Hard-ware suffix	Original date of issue	Description of changes	S1 compat-ibility	Technical document-ation
Major	Minor					
05	G	A/B	August 2000	Resolved possible reboot caused by failure to time sync from DNP 3.0 when IRIG-B is active which is also providing the time sync. Now, any failure of the DNP 3.0 to time sync will only produce a maintenance record. Correction to the alarm and trip indication of the faulted phase(s) for the second stage of the undervoltage and overvoltage protection in the fault record information on the relay LCD. Correction to the C32CS error when extracting and saving an uncompressed disturbance record from the P34x through the front port using MiCOM S1. This only applies to P34x IEC60870-5-103 protocol builds since this is the only communication option which supports uncompressed disturbance records. The error is caused by unavailable opto inputs or relay contacts being assigned to digital inputs in the Disturbance Recorder menu. Resolved possible problem with disturbance recorder triggering which could cause loss of disturbance record data, temporary freezing of the user interface or loss of rear port communications. Resolved unreliable MODBUS framing. Resolved creation of spurious password expired event when menu cell or MODBUS register is accessed. Resolved error code 0x 8D840000. Resolved incorrect derived 'IN' value on front panel default display. Minor bug fixes	V2.05 or Later	P341/EN T/D22
05	H	A/B	June 2004	For Courier/DNP 3.0/IEC60870-5-103 builds only. Correction to parity setting for MODBUS and DNP 3.0 when the relay is powered up. Improvement to the self checking of the analogue channels and SRAM. Minor bug fixes	V2.05 or Later	P341/EN T/D22
05	J	A/B	June 2004	For MODBUS builds only. Changes as for H. Improvement to the MODBUS driver to cope better with spurious data transmissions and failures of the relay to respond to commands where the server response time is fast. Minor bug fixes	V2.05 or Later	P341/EN T/D22
05	K	A/B	June 2004	MODBUS Time Transmission Format selectable via MODBUS only setting as Standard or Reverse for transmission of byte order. DO/PU ratio changed from 95% to 98% for Over/Undervoltage protection. Trip threshold changed from 1.05, 0.95 Vs to 1 Vs for Over and Undervoltage and NVD protection. TMS setting of Under/Overvoltage protection reduced from 0.5 to 0.05. Correction to false frequency protection start at power-up. MODBUS driver modified to prevent relay reboot with error code 0x8C810000 in hardware A/B/C relays for 60 Hz applications where fast polling and high baud rates are used. Modification to prevent reboot when large number of control and settings are sent to relay in quick succession over DNP 3.0. IEC60870-5-103. Status of summer bit now works correctly in time sync command. Correction to DNP 3.0 software where settings download from MiCOM S1 can fail for relays that have model dependent I/O configurations. Minor bug fixes	V2.05 or Later	P341/EN T/D22
05	L	A/B	July 2007	Correction to P341 Directional SEF which did not operate until the SEF 'Mode' setting is changed. Courier cell addresses for the IDMT characteristic enhancements in 06 software have been applied to 05K maintenance release, making S1 setting files incompatible. This has been corrected in 05L. Minor bug fixes	V2.05 or later	P341/EN T/D22

Software version		Hard-ware suffix	Original date of issue	Description of changes	S1 compat-ibility	Technical document-ation
Major	Minor					
06	A	A/C	August 2000	Not released to production. Additional IDMT characteristics for overcurrent protection (rectifier and RI curve), earth fault protection (RI and IDG curve) and sensitive earth fault protection (IDG curve). Change to time dial setting range of IEEE and US curves. Previously curves were based on TD/7 where TD = 0.5-15. Now, curves are based on TD where TD = 0.01-100. Also, includes change to US ST Inverse (C02) curve. K constant and L constant multiplied x 7 because of change to TD, now K=0.16758 and L=0.11858. Angle measurements for sequence quantities in Measurements 1 menu added. Optional 2nd rear communication port added. New power supply with increased output rating and reduced dc inrush current (typically < 10 A). (Model number hardware changed to suffix C). Wider setting range for Power and Sensitive Power protection. P>1/2 (reverse power) and P<1/2 (low forward power) maximum setting changed from 40 In to 300 In W (Vn=100/120 V) and from 160 In W to 1200 In W (Vn=380/480 V). Sen –P>1/2 and Sen P<1/2 maximum setting changed from 15 In to 100 In W (Vn=100/120 V) and from 60 In to 400 In W (Vn=380/480 V). There is also an additional setting for the Power and Sensitive Power protection to select the Operating mode as Generating or Motoring. Maximum overfrequency protection setting increased from 65 to 68 Hz. Change to undervoltage stage 2 (V<2) setting range to correct an error. The setting range has been increased from 10-70 V to 10-120 V (Vn=100/120 V) so that it is the same as V<1. Change to neutral voltage displacement protection and directional SEF protection so that they are now not blocked by the voltage transformer supervision logic when the VN Input and ISEF> VN Pol are selected as Measured. Includes all the improvements and corrections in 05F software except for 2 enhancement shown for 06B.	V2.06 or Later	P341/EN M/E33
06	B	A/C	October 2002	Minor bug fixes. Correction to undervoltage stage 2 (V<2) setting range. The setting range has been increased from 10-70 V to 10-120 V (Vn=110/120 V) so that it is the same as V<1. Enhancements to IEC608750-5-103 build to include private codes, monitor blocking and disturbance record extraction. New uncompressed disturbance recorder for IEC60870-5-103 build. Minor bug fixes	V2.06 or Later	P341/EN M/E33
06	C	A/C	March 2004	Changes are the same as 05G	V2.06 or Later	P341/EN M/E33
06	D	A/C	June 2004	For Courier/DNP 3.0/IEC60870-5-103 builds only. Correction to parity setting for MODBUS and DNP 3.0 when the relay is powered up. Improvement to the self checking of the analogue channels and SRAM. Minor bug fixes	V2.06 or Later	P341/EN M/E33
06	E	A/C	July 2004	For MODBUS builds only. Changes as for D. Improvement to the MODBUS driver to cope better with spurious data transmissions and failures of the relay to respond to commands where the serve response time is fast. Minor big fixes	V2.06 or Later	P341/EN M/E33
06	F	A/C	June 2005	Changes are the same as 05 K	V2.06 or Later	P341/EN M/E33

Software version		Hard-ware suffix	Original date of issue	Description of changes	S1 compat-ibility	Technical document-ation
Major	Minor					
07	A	A/C	April 2003	Not released to production. Optional additional 4 analogue inputs and 4 outputs (current loop inputs and outputs – CLIO). Number of alarms increased from 64 to 96 (New Alarm Status 3 word - 32 bit). Additional user alarms. Previously 1 manual reset and 2 self reset user alarms, now 12 manual reset and 4 self reset user alarms. Control Input states added to non volatile memory. German language text updated. Courier and MODBUS builds only. Minor bug fixes	V2.09 or Later	P341/EN M/E33
07	B	A/C	October 2003	Power measurement limits added to prevent none zero values with no current and voltage. Also power factor measurements limited to +/-1. In the Commissioning Test menu the DDB status has been made visible on the front panel display. Support for Trip LED Status and Alarm Status added to G26 data type for MODBUS register 30001	V2.09 or Later	P341/EN M/E33
07	B	A/C	October 2003	Correction to the CB trip/Close functionality via MODBUS so that local/remote setting in the CB Control menu is not ignored. Correction to MODBUS auto event extraction which does not work correctly in versions 05 and 06 software. Extension of the control input functionality to support pulse and latch operations in DNP 3.0. DNP 3.0 object 10 added to class 0 poll. Correction to DNP 3.0 time sync operation so that it does not modify the season bit in the time stamp. Correction to the manual reset user alarms so that the event record shows the alarm turning off only when a reset command . Correction to the fault recorder window for current based trips so that it can terminate properly once the FAULT_REC_TRIG signal (DDB 288) is reset. Previously it needed to wait for Relay 3 to reset also before termination. Resolved incorrect derived 'IN' value on front panel default display. Minor bug fixes	V2.09 or Later	P341/EN M/E33
07	C	A/C	March 2004	Resolved possible reboot caused by failure to time sync from DNP 3.0 when IRIG-B is active which is also providing the time sync. Now, any failure of the DNP 3.0 to time sync will only produce a maintenance record. Correction to the alarm and trip indication of the faulted phase(s) for the second stage of the undervoltage and overvoltage protection in the fault record information on the relay LCD. Correction to the C32CS error when extracting and saving an uncompressed disturbance record from the P34x through the front port using MiCOM S1. This only applies to P34xIEC60870-5-103 protocol builds since this is the only communication option which supports uncompressed disturbance records. The error is caused by unavailable opto inputs or relay contacts being assigned to digital inputs in the Disturbance Recorder menu. Resolved possible problem with disturbance recorder triggering which could cause loss of disturbance record data, temporary freezing of the user interface or loss of rear port communications. Resolved unreliable MODBUS framing. Resolved error code 0x 8D840000. Minor bug fixes	V2.09 or Later	P341/EN M/E33
07	D	A/C	June 2004	For Courier/DNP 3.0/IEC60870-5-103 builds only. Correction to parity setting for MODBUS and DNP 3.0 when the relay is powered up. Improvement to the self checking of the analogue channels and SRAM. Minor bug fixes	V2.09 or Later	P341/EN M/E33

Software version		Hard-ware suffix	Original date of issue	Description of changes	S1 compat-ibility	Technical document-ation
Major	Minor					
07	E	A/C	July 2004	For MODBUS builds only. Changes as for D. Improvement to the MODBUS driver to cope better with spurious data transmissions and failures of the relay to respond to commands where the server response time is fast. Minor bug fixes	V2.09 or Later	P341/EN M/E33
07	F	A/C	June 2005	Changes are the same as 05K	V2.09 or Later	P341/EN M/E33
30	A	J	November 2004	Not released to production. Enhanced main processor board. Company name change. 'ALSTOM' changed to 'MiCOM' in default Plant Reference cell and 'ALSTOM P' changed to 'MiCOM P' for ASDU5 message type, IEC protocol. User interface enhancements - larger 100x33 pixel graphical display of 3 lines x 16 characters + 2 new buttons, direct access keys. Control Input enhancements. Selection of latched or pulsed mode, Control Input labels added, disturbance recorder trigger from control inputs. 16 PSL Timers (previously 8). Platform alarms mapped to the DDB (Alarm Status 3). Time synchronization using an opto input. Opto input power frequency filter control, enabled/disabled. Courier over EIA485 can be selected for the 1st rear port in addition to existing K-Bus configuration. Transmission of the first rear port protocols (MODBUS/Courier/DNP3.0) using the fiber-optic port (IEC60870-5-103 previously available).	V2.11 or later	P341/EN M/E33
30	A	J	November 2004	Uncompressed disturbance recording added for Courier/MODBUS/DNP 3.0 (added to IEC60870-5-103 protocol in 05D, 06B software). Dual Characteristic DO/PU ratio Opto Inputs (DO/PU = 60/80% or 50/70%). 512 Event records (previously 250). DNP3 evolution. Scan interval for binary inputs (object 01) reduced from 5 s to 0.5 s. Scan interval for analogue inputs (object 30) reduced from 2 s to 1 s. Improved minimum step size of analogue input dead bands. Modbus Time Transmission Format selectable as Standard or Reverse for transmission of byte order. DO/PU ratio changed from 95% to 98% for Over/Under Voltage protection. Trip threshold changed from 1.05, 0.95 Vs to 1 Vs for Over and Undervoltage and NVD protection. TMS setting of Under/Overvoltage protection reduced from 0.5 to 0.05. Default labels changed for the digital inputs and outputs in Input Labels and Output Labels menu. Changed to be more generic - Input Lx, Output Rx. Correction to false frequency protection start at power-up. IEC60870-5-103. Status of summer bit now works correctly in time sync command. Minor bug fixes	V2.11 or later	P341/EN M/E33
30	B	J	November 2004	Modification to prevent reboot when large number of control and settings are sent to relay in quick succession over DNP 3.0. Correction to 2nd rear comms port channel failure for P34xxxxxxxxxxJ relays only. Minor bug fixes	V2.11 or later	P341/EN M/E33

Software version		Hard-ware suffix	Original date of issue	Description of changes	S1 compat-ibility	Technical document-ation
Major	Minor					
31	A	J	April 2005	Independent derived/measured neutral voltage protection (59N). P341 has 2 stages of measured and 2 stages of derived neutral voltage protection. Previous software versions included 2 stages of measured or derived neutral voltage protection. 1 definite time stage of negative phase sequence overvoltage protection (47). Same as P14x (47) function. 4 definite time stages of negative phase sequence overcurrent protection (46OC). Same as P14x (46OC) function. P341 minimum three phase power settings reduced to 2%Pn, previously 7%Pn. Correction to DNP 3.0 software where settings download from MiCOM S1 can fail for relays that have model dependent I/O configurations. Minor bug fixes	V2.11 or later	P341/EN M/E33
32	A	J	March 2006	Not released to production. Phase rotation function added. Can select phase rotation as ABC or ACB for all 3 phase current and voltage inputs. Can also individually select which 2 phases are swapped for any of the 3 phase current and voltage inputs. New menu column 'System Config' with phase rotation settings. In P34x relays the maximum number of disturbance recorder analogue channels has been increased in most relay models so that all anlogue inputs can be recorded. In the P341 the maximum number of recorded channels has remained as 8 but now channels can be set as unused if required. Number of PSL DDB signals increased from 1023 to 1408 and DDBs re-organized. This means that the PSL created in version 32 software is not compatible to PSL created in previous software versions and vice versa. Setting Group selection via 2 new DDB signals makes it possible to select a setting group via any opto input or remotely via a Control Input. Previously, the 4 setting groups could be selected using fixed opto inputs, 1 and 2. An 'Any Trip' DDB has been created to allow any contact(s) to be used as the trip indication. Previously, the Any Trip signal was defined as operation of Relay contact 3. The Any Trip signal operates the Trip LED, initiates the breaker fail logic and maintenance counters and is used in the fault recorder logic. Minor changes to description of CT and VT Ratio settings. Number of maintenance records increased from 5 to 10. Inter frame gap added between frames in multi-frame transmission of DNP 3.0 messages to be compatible with C264. Correction to error in NPS directional overcurrent operating time delay. The excess in the operating time (always less than 1s) only occurs when set to directional. Correction to intermittent incorrect IRIG-B status indication of 'Card Failed' with healthy IRIG-B source. Minor bug fixes	V2.14 or later	P341/EN M/E33, P341/EN AD/E43
32	B	J	May 2006	Minor bug fixes	V2.14 or later	P341/EN M/E33, P341/EN AD/E43
32	C	J	May 2006	MODBUS allows individual 16 bit register pairs that make up 32 bit data to be accessed individually. Correction to fast operation of overcurrent protection with IEEE/US inverse time reset characteristic. Minor bug fixes	V2.14 or later	P341/EN M/E33, P341/EN AD/E43
32	D	J	December 2006	Correction to P34x Directional Sensitive Earth Fault (Forward or reverse) function. Function does not operate if SEF/REF Protection is initially disabled in the configuration column and SEF Mode is set to 'SEF' (default setting) when the relay is booted up. Correct operation will only occur when the SEF Mode setting is changed (submitted) and changed back to 'SEF' or the relay is rebooted with SEF/REF enabled in the configuration column. Minor bug fixes	V2.14 or later	P341/EN M/E33, P341/EN AD/E43

Software version		Hard-ware suffix	Original date of issue	Description of changes	S1 compat-ibility	Technical document-ation
Major	Minor					
32	F	J	May 2007	Correction to VT secondary ratio setting for 32 software relays, Vn = 380/480 V rating. With a 1:1 VT ratio on a 380/480 V P340 relay with 32 software installed after power up the analogue quantities are 4 times too large. The error is corrected by re-appying the VT secondary (which is showing the correct value) setting. Local time zone adjustments for daylight saving time added to Date and Time menu. Minor bug fixes	V2.14 or later	P341/EN M/E33, P341/EN AD/E43
32	G	J	September 2007	Correction to CT secondary ratio setting for 32F software relays. When relay is powered off and on the secondary CT ratio is applied incorrectly for a 5A rating such that currents measured are 5 times too small. CT ratio is applied correctly if settings re-applied when relay is powered on. Correction to incorrect year being set when date and time is set via the user interface with IRIG-B active. Minor bug fixes	V2.14 or later	P341/EN M/E33, P341/EN AD/E43
32	H	J	November 2007	Correction to the CT ratio scaling for 32 software relays. If the CT ratio secondary settings are set to 5A and the relay rebooted, if the setting group is changed the CT secondary scaling reverts to 1A. Minor bug fixes	V2.14 or later	P341/EN M/E33, P341/EN AD/E43
32	J	J	December 2007	IEC61850 communications added.	V2.14 or later	P341/EN M/E33, P341/EN AD/E43
32	K	J	May 2008	Minor bug fixes	V2.14 or later	P341/EN M/E33, P341/EN AD/E43
32	L	J	March 2009	Correction to voltage vector shift fault recording where after the first Vector Shift trip the fault record vector shift angle measurement is not updated for subsequent Vector Shift Trips. Minor bug fixes	V2.14 or later	P341/EN M/E33, P341/EN AD/E43
33	A	J	June 2008	DNP 3.0 enhancements: configurable points table, default variations, SBO timeouts, integer scaling, floating point analogue values, disturbance record extraction, remote settable deadbands and class assignment, configurable message length and timeouts, data link confirmation, alias control inputs. Support for Russian language added. This is now an order option. PSL positional data is now downloaded to the relay with the logic so that when the PSL is extracted from the relay the positional data of signals etc is the same as when downloaded. Support for Set/Reset latches in the PSL added. Minor bug fixes	V3.00 (Studio) or later	P341/EN M/E33, P341/EN AD/E43 P341/EN AD/F54
33	B	J	March 2009	Correction to voltage vector shift fault recording where after the first Vector Shift trip the fault record vector shift angle measurement is not updated for subsequent Vector Shift Trips. Minor bug fixes	V3.00 (Studio) or later	P341/EN M/E33, P341/EN AD/E43 P341/EN AD/F54
33	C	J	June 2009	Correction to Residential O/V NVD protection when derived neutral voltage is used for all protection stages (VN>1/2/3/4) instead of VN>1/2 (derived), VN>2/3 (VN input, measured). This bug only affects 33B software. Minor bug fixes	V3.00 (Studio) or later	P341/EN M/E33, P341/EN AD/E43 P341/EN AD/F54
33	D	J	February 2010	Correction to several IEC61850 modeling issues for phase 1 of IEC61850. (1) Correction to missing measurements (VN/IN Derived Mag/Angle) and incorrect sourcing in the P340 IEC 61850 Phase 1 data model implementation. . (2) Correction to DDB signal status which is not available to 61850 model when events are configured to be filtered out. (3) Correction to some of the strings for the Data Attributes under the 'NamPlt' Data Object under LLN0 (only) of some of the Logical Devices. Minor bug fixes	V3.00 (Studio) or later	P341/EN M/E33, P341/EN AD/E43 P341/EN AD/F54

Software version		Hard-ware suffix	Original date of issue	Description of changes	S1 compat-ibility	Technical document-ation
Major	**Minor**					
35/70	A	J	December 2009	Dynamic Line Rating protection added (Version 70 software). Larger 60TE case version made available with additional I/O. New Product Specific ordering options F/G/H/J/L/M. Redundant Ethernet port option (IEC61850). IEC 61850 Phase 3 enhancements: Controls – Direct Control, Direct Control with enhanced security, Select Before Operate (SBO) with enhanced security, Eight Buffered Report Control Blocks and sixteen Unbuffered Report Control Blocks, Configurable Data Sets, Published GOOSE messages, Uniqueness of control, Select Active Setting Group, Quality for GOOSE, Address List, Originator of Control, Energy measurements and Reset controls for demand and thermal measurements using the MMTR Logical Node, Unit multipliers for all measurements. Read Only Mode for remote communications ports added. Correction to DDB signal status not being available to 61850 model when events are configured to be filtered out. Correction to some of the strings for the IEC61850 Data Attributes under the 'NamPlt' Data Object under LLN0 (only) of some of the Logical Devices. Minor bug fixes.	V3.00 (Studio) or later	P341/EN M/F64
35/70	B	J/K	November 2010	Improvements to IEC 61850 comms fixing problems as described below:. (1) A short on/off pulse state may cause the interim stage change to be not reported. (2) Occasionally an opto-input change of state is not registered in System\OptGGIO1.ST. (3) Applying XCBR1.CO.Pos Open/Close can cause the relay to reply with Invalid Position even though the Open/Close operation is successful . (4) IEC 61850 communications can terminate after operating a control with control status in RCB . (5) IEC 61850 buffered reporting stops working after a period of time when applying several faults to generate reports. Minor bug fixes.	V3.00 (Studio) or later	P341/EN M/F64
36/71	B	J	November 2010	Check synchronization and CB Control functions added. 4 definite time stages of df/dt protection added. Previously only 1 stage of df/dt. CT Polarity - Standard/Inverted added. Improved undercurrent detector algorithm for CB Fail protection added. Support for Chinese language added. This is now an order option. . Chinese HMI requires two language blocks so only 2 other languages are supported, by default these are English and French. IEC6 0870-5-103 generic services added. This enables all measurements to be available with this protocol. Number of PSL DDB signals increased from 1407 to 2047. IEC61850 improvements as 35B software. Minor bug fixes.	V3.00 (Studio) or later	P341/EN M/F74
36/71	U	J	January 2011	Software re-branded from Areva T&D to Schneider Electric. Minor bug fixes.	V3.00 (Studio) or later	P341/EN M/G74
36/71	V	J	January 2011	Compared with software version 36U and 71U there are only fixed four DTS, which are CTCSE10005, CTCSE10009, PCS3426 and PCS3428. Minor bug fixes.	V3.00 (Studio) or later	P341/EN M/G74

2 RELAY SOFTWARE AND SETTING FILE SOFTWARE VERSIONS

Setting File Software	Relay Software													
	01	02	03	04	05	06	07	30	31	32A-C	32D-L	33	35, 70	36, 71
01	✓	✓	✓	✓	×	×	×	×	×	×	×	×	×	×
02	×	✓	✓	✓	×	×	×	×	×	×	×	×	×	×
03	×	×	✓	✓	×	×	×	×	×	×	×	×	×	×
04	×	×	×	✓	×	×	×	×	×	×	×	×	×	×
05	×	×	×	×	✓	×	×	×	×	×	×	×	×	×
06	×	×	×	×	×	✓	✓	×	×	×	×	×	×	×
07	×	×	×	×	×	×	✓	×	×	×	×	×	×	×
30	×	×	×	×	×	×	×	✓	✓	×	×	×	×	×
31	×	×	×	×	×	×	×	×	✓	×	×	×	×	×
32A-C	×	×	×	×	×	×	×	×	×	✓	✓	✓	✓	✓
32D-L	×	×	×	×	×	×	×	×	×	×	✓	✓	✓	✓
33	×	×	×	×	×	×	×	×	×	×	×	✓	✓	✓
35, 70	×	×	×	×	×	×	×	×	×	×	×	×	✓	✓
36, 71	×	×	×	×	×	×	×	×	×	×	×	×	×	✓

Note 1 05, 06 PSL compatible with 07 PSL except for user alarm DDBs

3 RELAY SOFTWARE AND PSL FILE SOFTWARE VERSIONS

PSL File Software	Relay Software														
	01	02	03	04	05	06	07	30	31	32 A-B	32 C-H	32 J-L	33	35, 70	36, 71
01	✓	✓	✓	✓	×	×	×	×	×	×	×	×	×	×	×
02	×	✓	✓	✓	×	×	×	×	×	×	×	×	×	×	×
03	×	×	✓	✓	×	×	×	×	×	×	×	×	×	×	×
04	×	×	×	✓	×	×	×	×	×	×	×	×	×	×	×
05	×	×	×	×	✓	✓	✓	×	×	×	×	×	×	×	×
06	×	×	×	×	✓	✓	✓	×	×	×	×	×	×	×	×
07	×	×	×	×	×	×	✓	×	×	×	×	×	×	×	×
30	×	×	×	×	×	×	×	✓	✓	×	×	×	×	×	×
31	×	×	×	×	×	×	×	×	✓	×	×	×	×	×	×
32A-B	×	×	×	×	×	×	×	×	×	✓	×	×	×	×	✓
32C-H	×	×	×	×	×	×	×	×	×	×	✓	×	×	×	✓
32J-L	×	×	×	×	×	×	×	×	×	×	×	✓	×	×	✓
33	×	×	×	×	×	×	×	×	×	×	×	×	✓	✓	✓
35, 70	×	×	×	×	×	×	×	×	×	×	×	×	×	✓	✓
36, 71	×	×	×	×	×	×	×	×	×	×	×	×	×	×	✓

Note 1 05, 06 PSL compatible with 07 PSL except for user alarm DDBs

4 RELAY SOFTWARE AND MENU TEXT FILE SOFTWARE VERSIONS

Menu Text File Software	Relay Software																		
	01	02	03	04	05 A-E	05 F-J	05 K	06 A-E	06 F	07 A-E	07 F	30	31	32 A-B	32 C-D	32 E-L	33	35, 70	36, 71
01	✓	×	×	×	×	×	×	×	×	×	×	×	×	×	×	×	×	×	×
02	×	✓	×	×	×	×	×	×	×	×	×	×	×	×	×	×	×	×	×
03	×	×	✓	×	×	×	×	×	×	×	×	×	×	×	×	×	×	×	×
04	×	×	×	✓	×	×	×	×	×	×	×	×	×	×	×	×	×	×	×
05A-E	×	×	×	×	✓	×	×	×	×	×	×	×	×	×	×	×	×	×	×
05F-J	×	×	×	×	×	✓	×	×	×	×	×	×	×	×	×	×	×	×	×
05K	×	×	×	×	×	×	✓	×	×	×	×	×	×	×	×	×	×	×	×
06A-E	×	×	×	×	×	×	×	✓	×	×	×	×	×	×	×	×	×	×	×
06F	×	×	×	×	×	×	×	×	✓	×	×	×	×	×	×	×	×	×	×
07A-E	×	×	×	×	×	×	×	×	×	✓	×	×	×	×	×	×	×	×	×
07F	×	×	×	×	×	×	×	×	×	×	✓	×	×	×	×	×	×	×	×
30	×	×	×	×	×	×	×	×	×	×	×	✓	×	×	×	×	×	×	×
31	×	×	×	×	×	×	×	×	×	×	×	×	✓	×	×	×	×	×	×
32A-B	×	×	×	×	×	×	×	×	×	×	×	×	×	✓	×	×	×	×	✓
32C-D	×	×	×	×	×	×	×	×	×	×	×	×	×	×	✓	×	×	×	✓
32 E-L	×	×	×	×	×	×	×	×	×	×	×	×	×	×	×	✓	×	×	✓
33	×	×	×	×	×	×	×	×	×	×	×	×	×	×	×	×	✓	×	✓
35, 70	×	×	×	×	×	×	×	×	×	×	×	×	×	×	×	×	×	✓	✓
36, 71	×	×	×	×	×	×	×	×	×	×	×	×	×	×	×	×	×	×	✓

Note *Menu text remains compatible within each software version (except 05/06/07) but is NOT compatible across different versions.*

Customer Care Centre

http://www.schneider-electric.com/CCC

Schneider Electric
35 rue Joseph Monier
92506 Rueil-Malmaison
FRANCE

Phone: +33 (0) 1 41 29 70 00
Fax: +33 (0) 1 41 29 71 00

www.schneider-electric.com

Publication: P341/EN M/G74

Publisher: Schneider Electric

February 2012